FT-980

TECHNICAL SUPPLEMENT

YAESU MUSEN CO., LTD.

C.P.O. BOX 1500
TOKYO, JAPAN

CONTENTS

(Page)

ERRATA FOR THE FT-980 OPERATING MANUAL 2
SOLDERING AND DESOLDERING TECHNIQUE 4
GENERAL PERFORMANCE IMPROVEMENT MODIFICATIONS 7
CAT SYSTEM SERIAL I/O DATA MANUAL 13
UNIT LOCATIONS 18
SERVICE AND ALIGNMENT 20
COMPONENT APPLICATIONS 32
FREQUENCY RELATIONSHIPS 49
SIGNAL PATHS 50
CPU BOARD BLOCK DIAGRAM 54
CONNECTION DIAGRAM 55
PARTS LAYOUTS, SCHEMATICS, SIGNAL LEVELS
AND VOLTAGE CHARTS
- RF UNIT 56
- IF UNIT 60
- AF UNIT 63
- VFO UNIT 66
- PLL AND VCO UNITS 69
- CPU UNIT 74
- FSK UNIT 77
- LPF AND RELAY UNITS 79
- PROTECTOR UNIT 80
- DIAL UNIT 81
- REG UNIT 83
- CONTROL UNIT 85
- KEY MATRIX UNIT 86
- DISPLAY UNITS (A, B and C) 87
- MONITOR UNIT 90
- 100W PA UNIT 91
- 10W PA UNIT 92
- 100W PS UNIT 93
- 10W PS UNIT 94
- PI UNIT 95
- MISCELLANEOUS UNITS 96
- FIF-80 INTERFACE UNIT 97

FRONT PANEL EXPLODED VIEW 98
REAR PANEL EXPLODED VIEWS 99
PARTS LIST 100

FT-980
TECHNICAL SUPPLEMENT



This manual is intended to serve as a technical supplement to the FT-980 Operating Manual. Detailed information regarding functions, installation, interconnections, operation, and installation of options has been provided in the Operating Manual, and is not reprinted herein. Therefore, this Technical Supplement is not intended to serve as an independent reference, but to be used in conjunction with the information provided in the Operating Manual.

Because there are nearly eight hundred semiconductor devices in the FT-980, circuit description information is provided in the form of numerous block diagrams and a complete Component Applications list. It is our hope that this manner of providing functional information will prove to be more convenient for the owner and technician than would a lengthy verbal description. Those readers who are not familiar with the basic types of analog and digital circuits that serve as the building blocks of the FT-980 are encouraged to study instructional material, such as that contained in handbooks on amateur radio and digital circuit design, before attempting to understand the design of the FT-980. Each block in the block diagrams represents one such basic circuit, while the Component Applications list provides additional details for each semiconductor. Specific circuit details are provided in the schematic diagrams.

The few modifications that have been developed for the FT-980 since the start of production are all included in this Manual. All of the general performance improvement modifications have been incorporated from Production Lot 3 onwards, while some have been incorporated in some transceivers in earlier Lots (1 and 2).

While we believe this technical information is correct and factual, Yaesu assumes no liability for damage that may result from typographical or other errors that may be present. Your cooperation in pointing out any inconsistencies in the technical information would be appreciated.

Yaesu Musen reserves the right to make changes in the circuitry of this transceiver, in the interest of technological improvement, without notification of the owner.

ERRATA FOR THE FT-980 OPERATING MANUAL

The following corrections and additions apply to the first printing of the FT-980 Operating Manual:

Page 20

Later printings of the Operating Manual include important notes related to the interconnection of linear amplifiers. Page 3 of this Technical Supplement is a replacement for page 20 of the first printing of the Operating Manual.

Page 21

The note beneath the drawing of the ACC-2 plug wiring should be replaced with the following:

"(Do not jumper from pin 4 to GND)"

Page 22

In diagram 2, showing the signal flow through the IF filters with only the optional CW-W filter (XF-8.9HC) installed in position XF_{2006}, the label on the arrow pointing into the CW-W filter should say "CW-N", and not "CW-W". The CW-W signal passes through SSB filter position XF_{2005}.

Page 33

The following paragraph is added to step 3:

If the XF-455.8MCN CW-N filter is not being installed, and is not installed already, locate plug P_{71} (on J_{2001}), and reverse the wires in locations 3 and 4, so that the white/orange wire ends up at pin 3, and white/red at pin 4.

Also, the next paragraph is added to step 5:

Check the colors of the wires at pins 3 and 4 of P_{71} (on J_{2001}). Make sure that the white/red wire is at pin 3, and the white/orange wire is at pin 4. If not, reverse the connectors at these pins.

and the drawing at the right is added to the page, showing the method of removing the wire connectors from P_{71}.

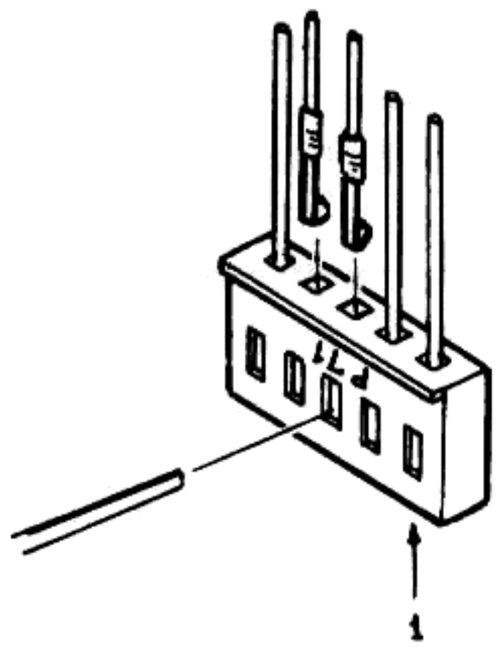

LINEAR AMPLIFIER INTERCONNECTIONS

When a linear amplifier is used with the FT-980, check the current required to control the T/R relay in the linear amplifier. If less than 200 mA, the T/R control line can be directly connected to TX GND and GND on ACC-2 jack. However, also be sure that a back pulse cancelling diode is installed across the T/R relay in your linear amplifier. If this diode is not present, install a general purpose rectifier diode as shown in Figure 1.

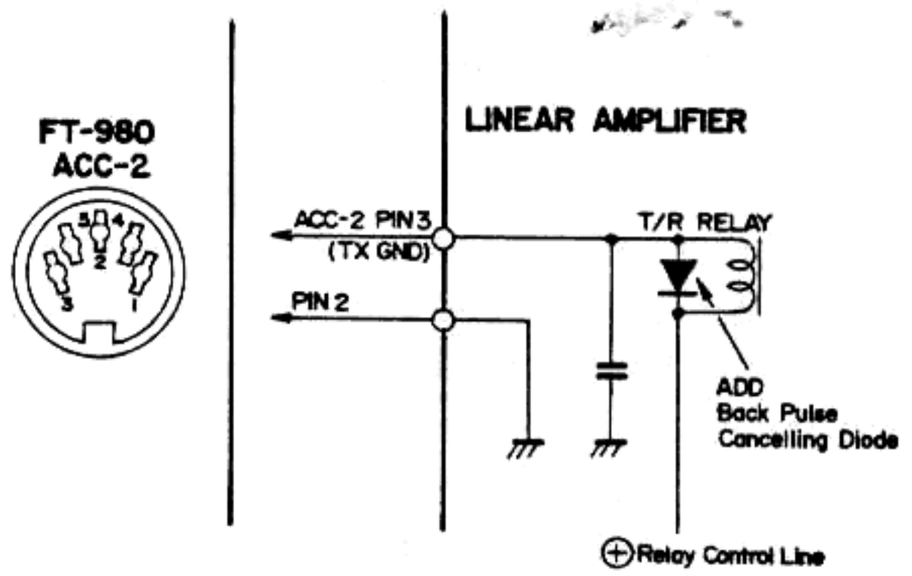

Figure 1

When the required T/R relay current is higher than 200 mA, the T/R control line from the linear amplifier must not be connected directly to the ACC-2 jack, but an extra relay box must be used to avoid damage to the T/R relay in the FT-980. Refer to Figure 2, and make the relay box for the interconnection. This .relay box is not available from Yaesu.

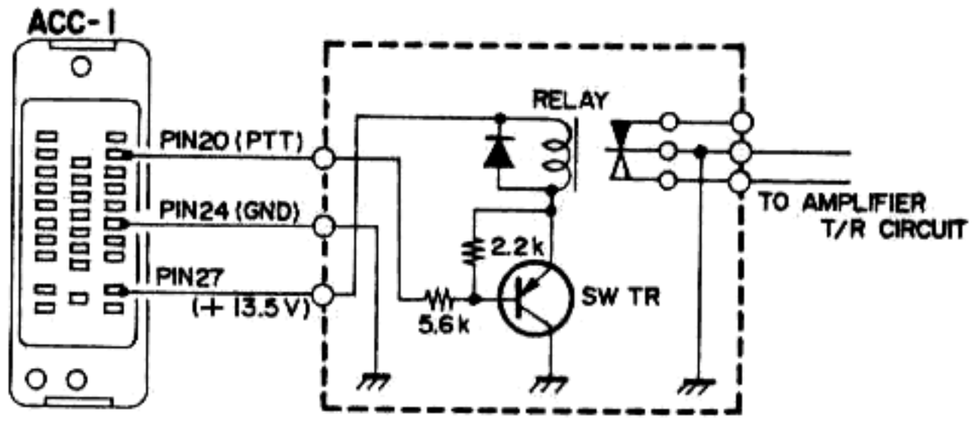

Figure 2

NON-QSK LINEAR AMPLIFIER INTERCONNECTIONS

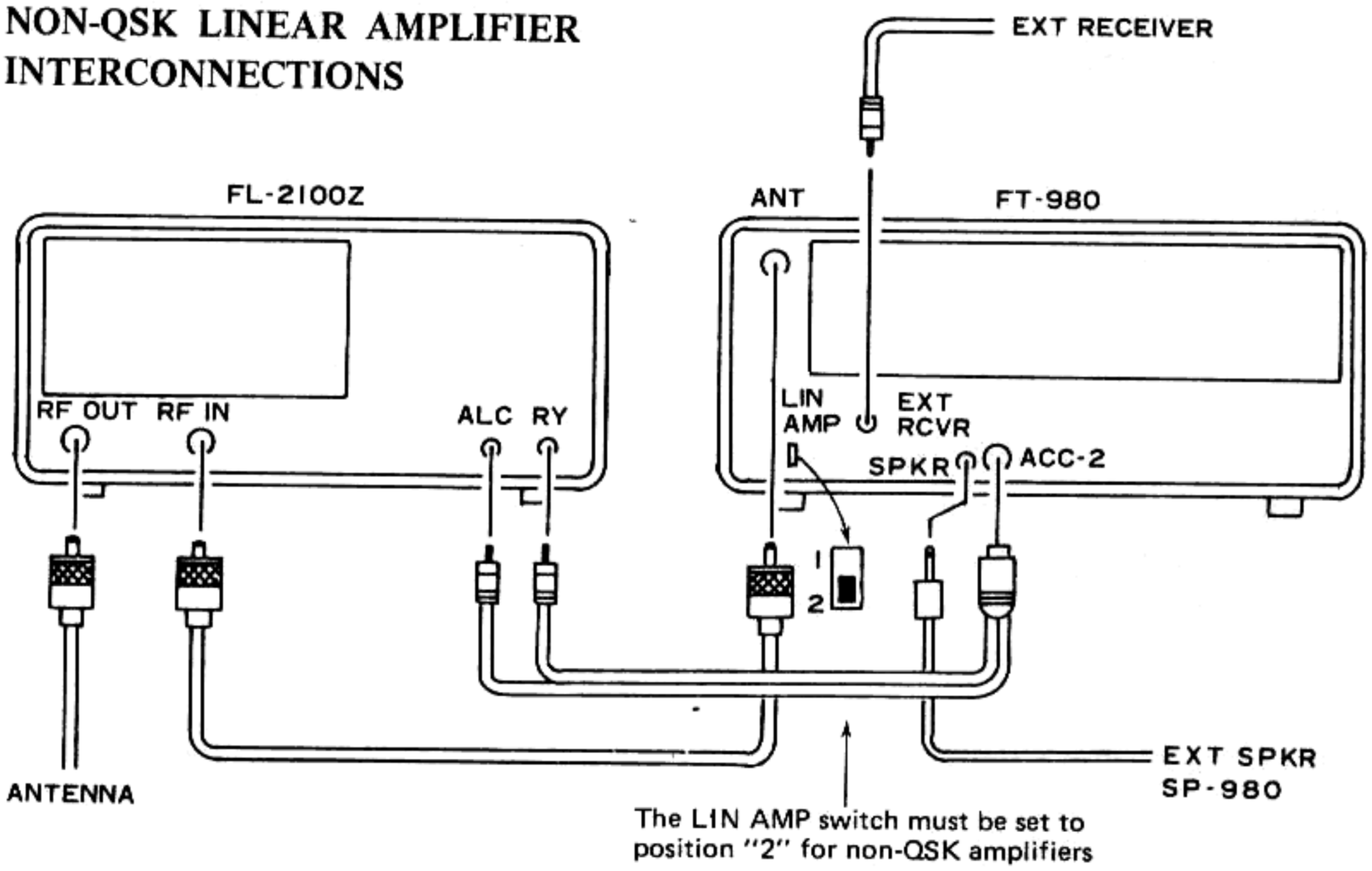

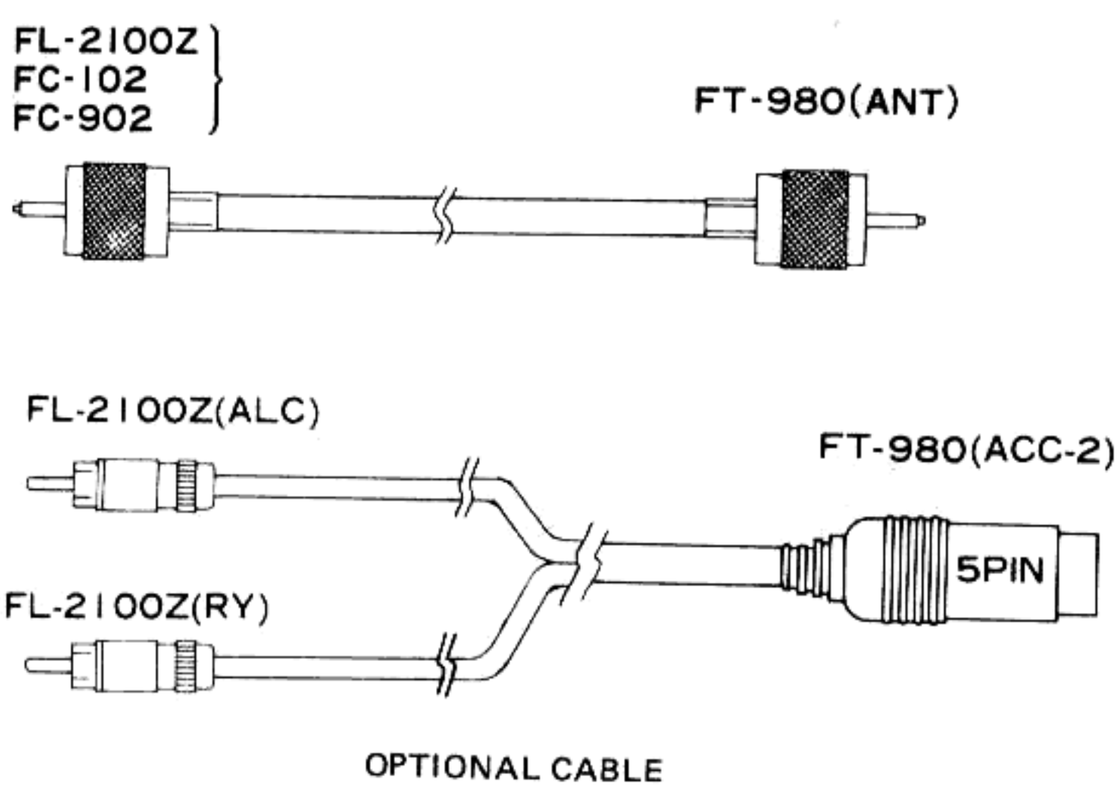

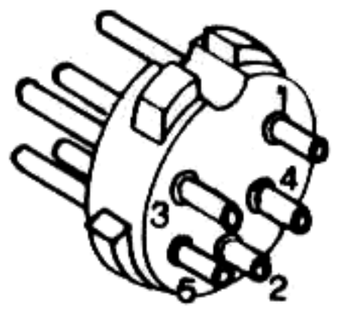

1 EXT ALC
2 GND
3 TX GND
4 DELAY
5 RX GND

If the closing time of the T/R relay in the linear amplifier is long enough to cause the ALC of the FT-980 to pulse at the start of transmission, install a jumper between pins 4 and 2 of this plug. If in doubt, install the jumper.

Please read the caution notice on page 32.

ACC-2 Plug Connections

SOLDERING AND DESOLDERING TECHNIQUE

SOLDERING AND DESOLDERING TECHNIQUE ON PRINTED CIRCUIT BOARDS

The FT-980 circuit boards are tough, but mishandling during soldering can cause circuit traces to "lift." While this does not cause permanent damage to the board, much servicing trouble can result, because of the tendency for this lifted trace to break. A few simple precautions will keep your circuit boards in A-1 condition.

1. Use only a 12 to 30-watt chisel-tip soldering iron, with the tip arounded or isolated from AC and DC potential. Voltage at the tip can easily destroy CMOS components.

2. Use only the minimum amount of heat necessary to remove a component, or to cause the solder to "flow" when installing a new component.

3. USE ONLY 60/40 ROSIN CORE SOLDER.

4. Use solder removing braid and flux to absorb excess solder before installing a new component. A solder sucker can also be used, but most be handled with care to avoid lifting traces.

5. Do not attempt to remove DIP ICs without first cutting all of the pins on the component side of the board, unless you have the correct desoldering equipment (spring-loaded clamp and all-pin desoldering tip).

   If you do lift a trace, don't worry! Read on to find out how to repair traces like a pro.

NOTES ON USE OF CMOS COMPONENTS:

As CMOS devices are extremely sensitive to damage from static electricity, special precautions must be observed.

In storage, use only conductive sponge specially designed for CMOS components.

When installing a CMOS part in a socket, or on a circuit board, be certain that the power is off. In addition, the technician should rest his hand on the chassis as the component is inserted, so as to place his hand at the same potential as the chassis (better to discharge small amounts of static electricity through your fingers than through a $5 IC !).

When soldering a CMOS part onto a circuit board, use a low-wattage iron, and be sure to ground the tip with a clip lead, if the tip is not grounded through a three-wire power cord.

INSERTION OF PARTS ON CIRCUIT BOARDS

All of the below are acceptable ways of inserting components into circuit board mounting holes.



(a) Bend leads slightly



(b) Straight-in mounting

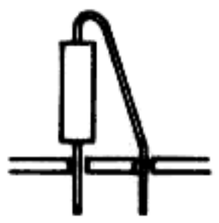

(c) Vertical mounting

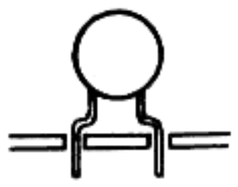

(d) Preformed disc ceramic capacitor

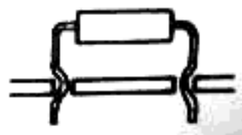

(e) Preformed resistor, diode, etc.

SOLDERING AND DESOLDERING TECHNIQUE

SOLDERING AND DESOLDERING TECHNIQUE ON PRINTED CIRCUIT BOARDS

The FT-980 circuit boards are tough, but mishandling during soldering can cause circuit traces to "lift." While this does not cause permanent damage to the board, much servicing trouble can result, because of the tendency for this lifted trace to break. A few simple precautions will keep your circuit boards in A-1 condition.

1. Use only a 12 to 30-watt chisel-tip soldering iron, with the tip arounded or isolated from AC and DC potential. Voltage at the tip can easily destroy CMOS components.

2. Use only the minimum amount of heat necessary to remove a component, or to cause the solder to "flow" when installing a new component.

3. USE ONLY 60/40 ROSIN CORE SOLDER.

4. Use solder removing braid and flux to absorb excess solder before installing a new component. A solder sucker can also be used, but most be handled with care to avoid lifting traces.

5. Do not attempt to remove DIP ICs without first cutting all of the pins on the component side of the board, unless you have the correct desoldering equipment (spring-loaded clamp and all-pin desoldering tip).

   If you do lift a trace, don't worry! Read on to find out how to repair traces like a pro.

NOTES ON USE OF CMOS COMPONENTS:

As CMOS devices are extremely sensitive to damage from static electricity, special precautions must be observed.

In storage, use only conductive sponge specially designed for CMOS components.

When installing a CMOS part in a socket, or on a circuit board, be certain that the power is off. In addition, the technician should rest his hand on the chassis as the component is inserted, so as to place his hand at the same potential as the chassis (better to discharge small amounts of static electricity through your fingers than through a $5 IC !).

When soldering a CMOS part onto a circuit board, use a low-wattage iron, and be sure to ground the tip with a clip lead, if the tip is not grounded through a three-wire power cord.

INSERTION OF PARTS ON CIRCUIT BOARDS

All of the below are acceptable ways of inserting components into circuit board mounting holes.



(a) Bend leads slightly



(b) Straight-in mounting

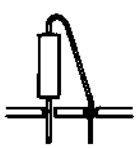

(c) Vertical mounting

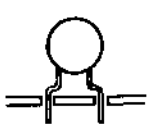

(d) Preformed disc ceramic capacitor



(e) Preformed resistor, diode, etc.

BASIC SOLDERING PRACTICE

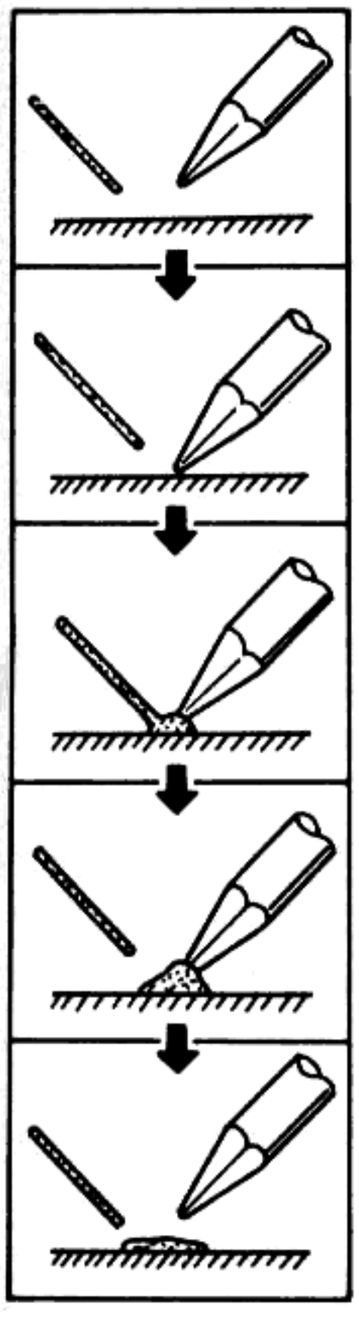

(1) Prepare soldering iron and solder. The tip of the iron should be thoroughly tinned and wiped clean of excess solder.

(2) Apply soldering iron to surface to be soldered. Do not press the iron into the surface.

(3) Apply solder to junction of iron and heated surface.

(4) When enough solder is applied, remove solder. Continue to apply heat just until solder flows cleanly.

(5) Remove iron from work. Do not apply more heat than necessary for good solder flow.

Soldering to terminal posts:

(Be certain to apply heat to both post and wire.)

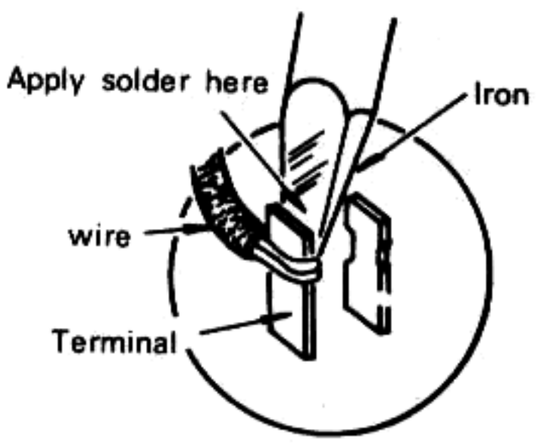





EXAMPLES OF POOR SOLDERING PRACTICE

Unwanted solder bridge connecting two tracks (caused by use of too much solder)	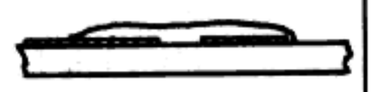
"Cold joint" (caused by insufficient heat to part of work, resulting in poor solder flow)	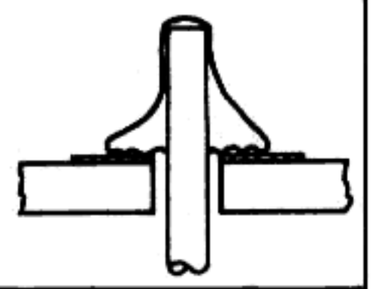
Unstable joint (caused by insufficient heat or solder)	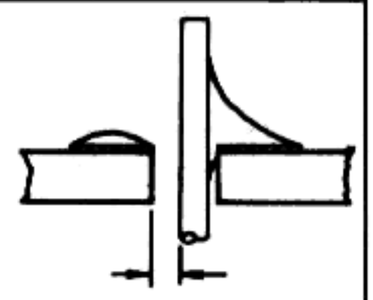
Proper soldering: A smooth fillet of solder surrounds the lead and just covers the foil pad.	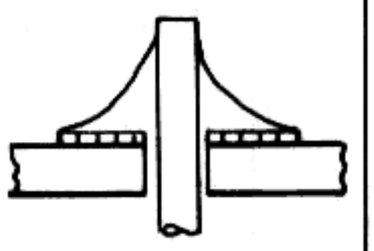

If you have previously lifted a trace, make an etch cut on each side of the lifted trace as shown in the drawing, and install a wire bridge.

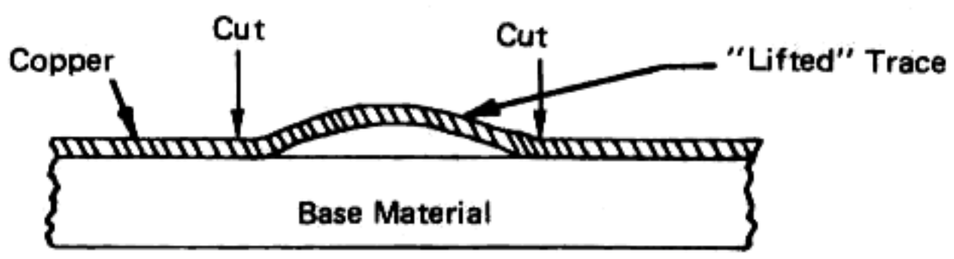

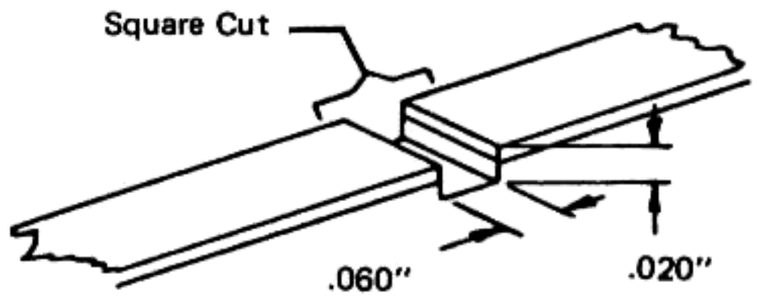

Coat Cut Area With Eastman 910
After Soldering Wire Bridge

TYPICAL PART FAILURES, CAUSES AND SYMPTOMS

PARTS	CAUSE OF TROUBLE	SYMPTOMS
Semiconductors (IC, FET, TR)	High supply voltage Open circuit Excessive drive High temperature	Short or open circuit Output decreases to 1/2 at 80°C Internal noise Instability
MOS FET MOS IC	Static electricity	Total failure Short or open circuit
Crystal Crystal filter	Shock High temperature Aging	No oscillation Off frequency Frequency drift Filter bandpass change
Resistor	Excessive power High temperature	Component burned Value changed Open circuit
Potentiometer	Excessive power Shock Dust or oil Wear	Component burned Open circuit Noise Unsmooth rotation
Capacitor	Excess voltage High temperature Aging	Shorted Leakage Open/decreased capacitance
Variable capacitor Trimmer capacitor	Ratings exceeded Dust between plates Shock, forced rotation	Shorted Leakage Unsmooth rotation
Coils	Ratings exceeded Misadjusted Core or bobbin broken	Open or short circuit Leakage or shorted turns Detuned
Switch	Ratings exceeded Aging Dust or oil	Poor contact Unsmooth operation Open circuit
Relay	Ratings exceeded Humidity Dust or oil on contacts	Coil open Poor or intermittent contact Noise

GENERAL PERFORMANCE IMPPOVEMENT MODIFICATIONS

This set of simple modifications improves a number of performance aspects of the FT-980. Some of these have already been carried out in some early models, but all have been done on transceivers having serial numbers above XX030000 (Lot 3).

Serial numbers are composed of a letter and a number, indicating the date of manufacture, followed by six digits. The first two digits (closest to the date code) are the Production Lot number. So, for example, serial number 0C123456 is from Production Lot 12, set number 3456. Before making any modification, make sure that the procedure to be followed applies to the Lot number of the particular transceiver being modified.

Also, before making any modification, check to see if the intended modification has already been carried out by a Yaesu agent, dealer or previous owner.

The component changes are summarized below, and actual details of the modifications are given pictorially on the following pages.

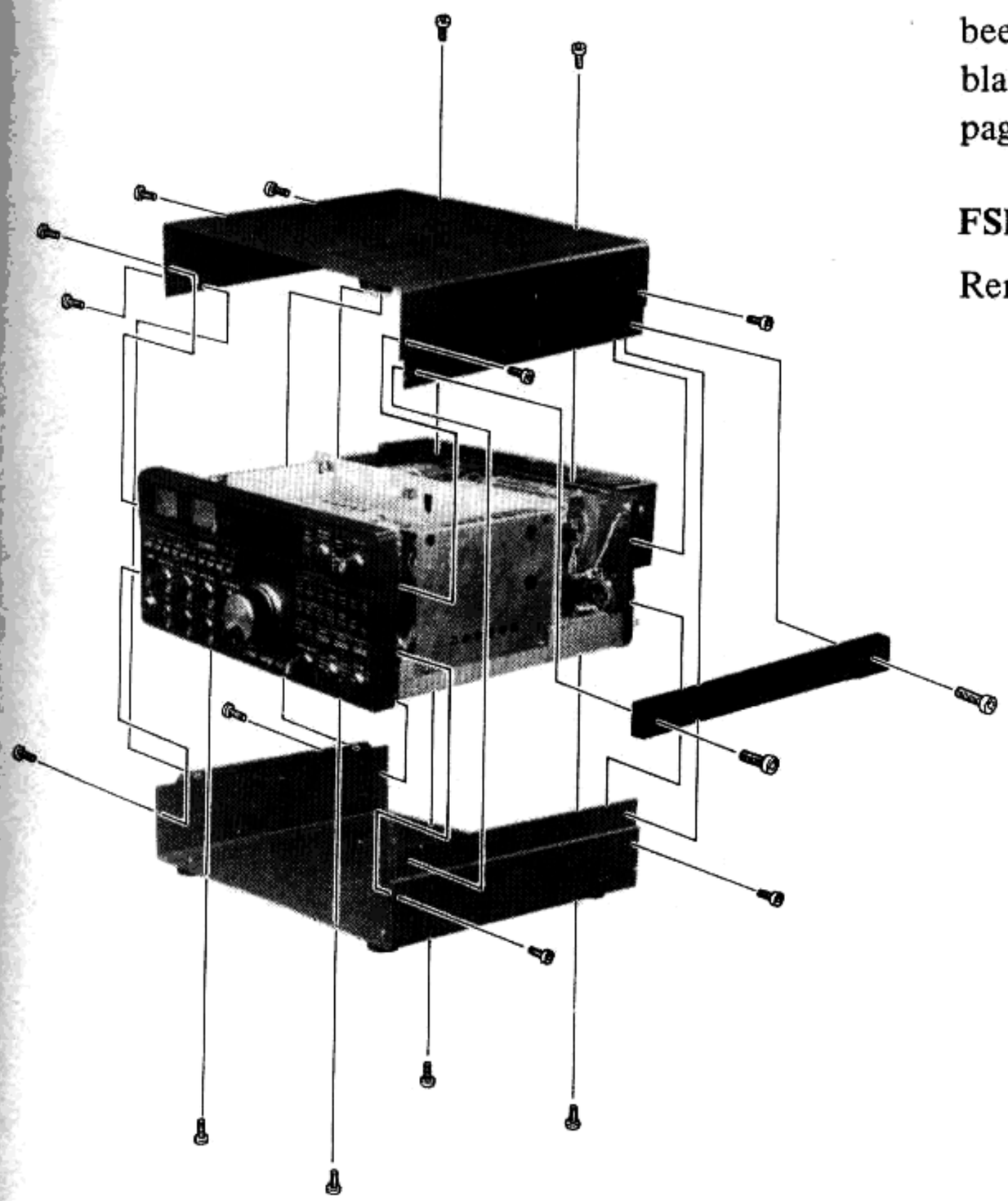

RF Unit (page 8)

Add type 1SS53 (general purpose silicon) diode D_{1096} between the common anodes of the diodes connected to J_{1016} and pin 10 of Q_{1028}. The cathode of the new diode connects to Q_{1028}. Install on the solder side of the board, and use plastic insulating sleeves on each lead of the diode.

PLL/VCO Unit (page 9)

Remove resistors R_{7067} and R_{7093}. On the solder side of the board, cut the indicated track on the copper pattern in the area between Q_{4011} and Q_{4013}, and install the two jumpers as indicated in the figures on page 10.

VFO Unit (page 11)

Remove resistors R_{4036}, R_{4037} and R_{4038}, capacitor C_{4042}, and diode D_{4002}. Replace R_{4036} with 1.5 kilohms in the same location as the original part. Replace R_{4037} with 100 kilohms, but install one lead in the hole originally used for the nearest lead of C_{4042} (removed), as illustrated.

In the VCO enclosure on the VFO Unit, remove capacitors C_{4009} and C_{4011}, and replace both with the same value CH-type (instead of RH and UJ, removed). Make sure that these have not already been changed before removing: the CH types have black paint on the top, or are marked "CH". See page 12.

FSK Unit

Remove capacitor C_{1802}, shown on page 12.

RF UNIT

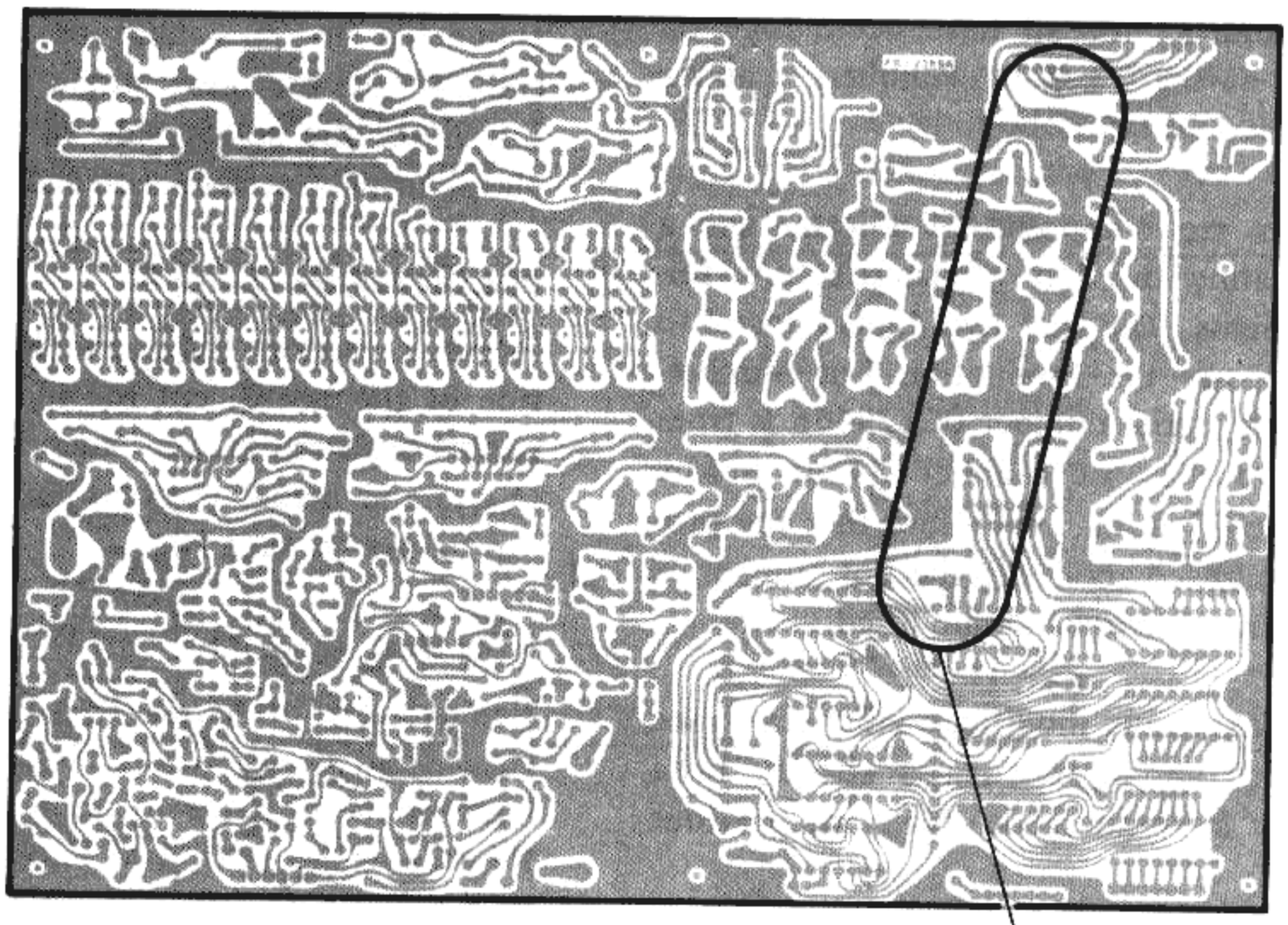

RF UNIT (PB-2389A)

Solder side

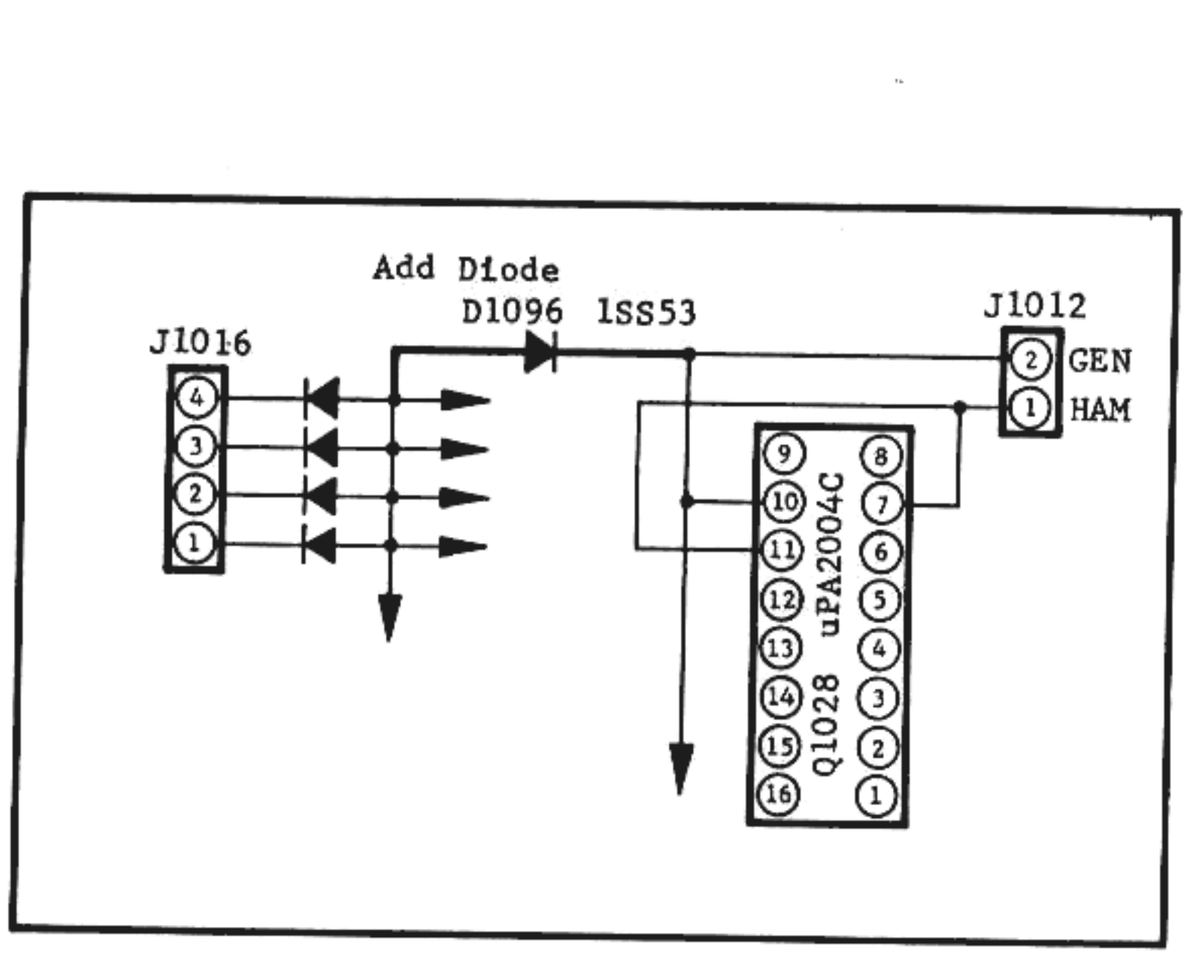

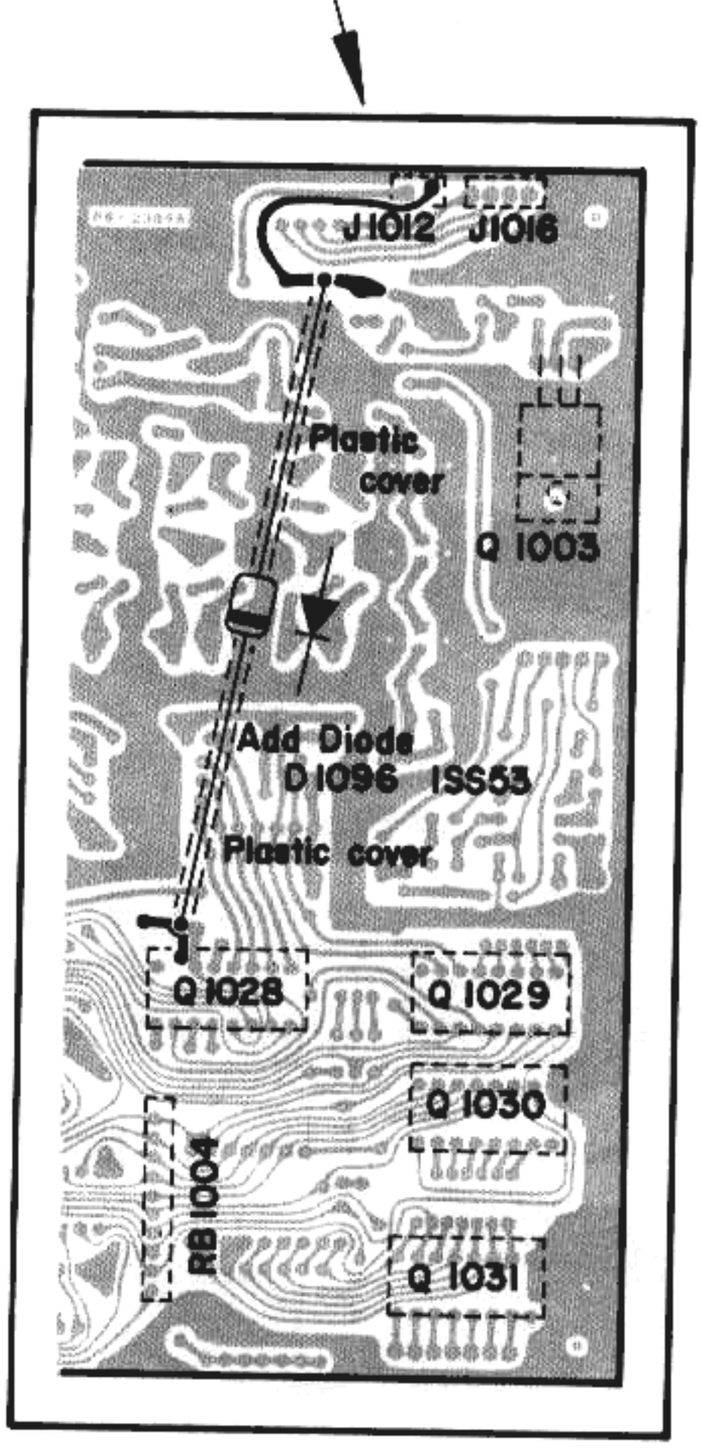

PLL/VCO UNIT

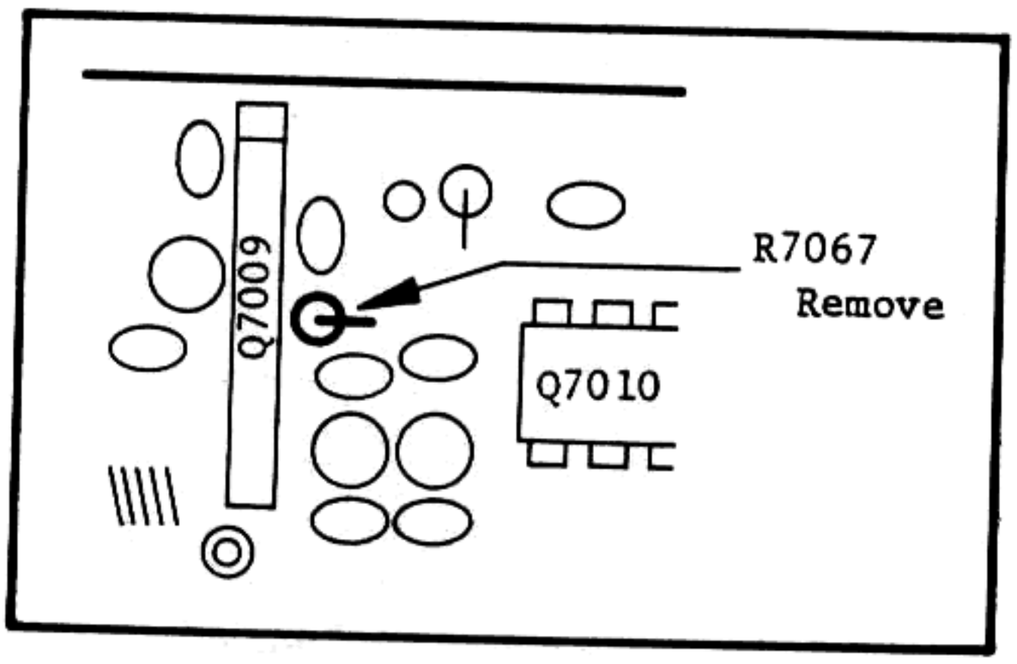

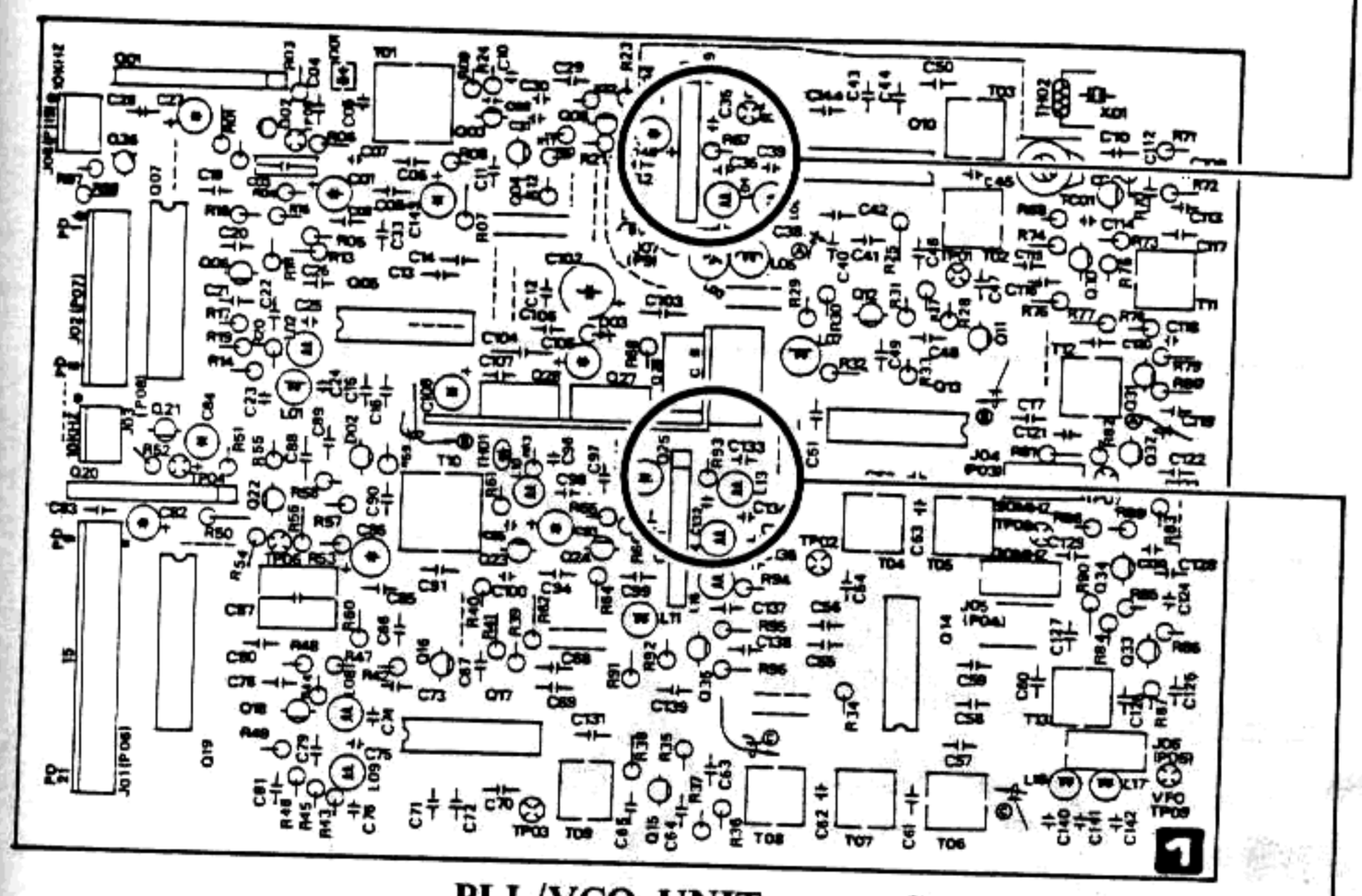

PLL/VCO UNIT Component side

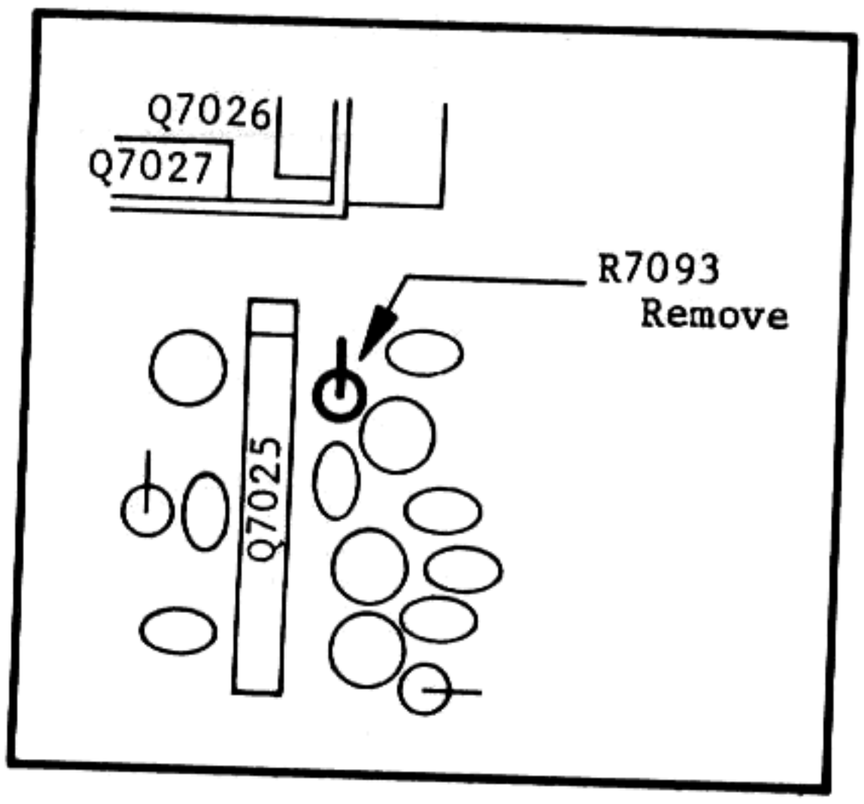

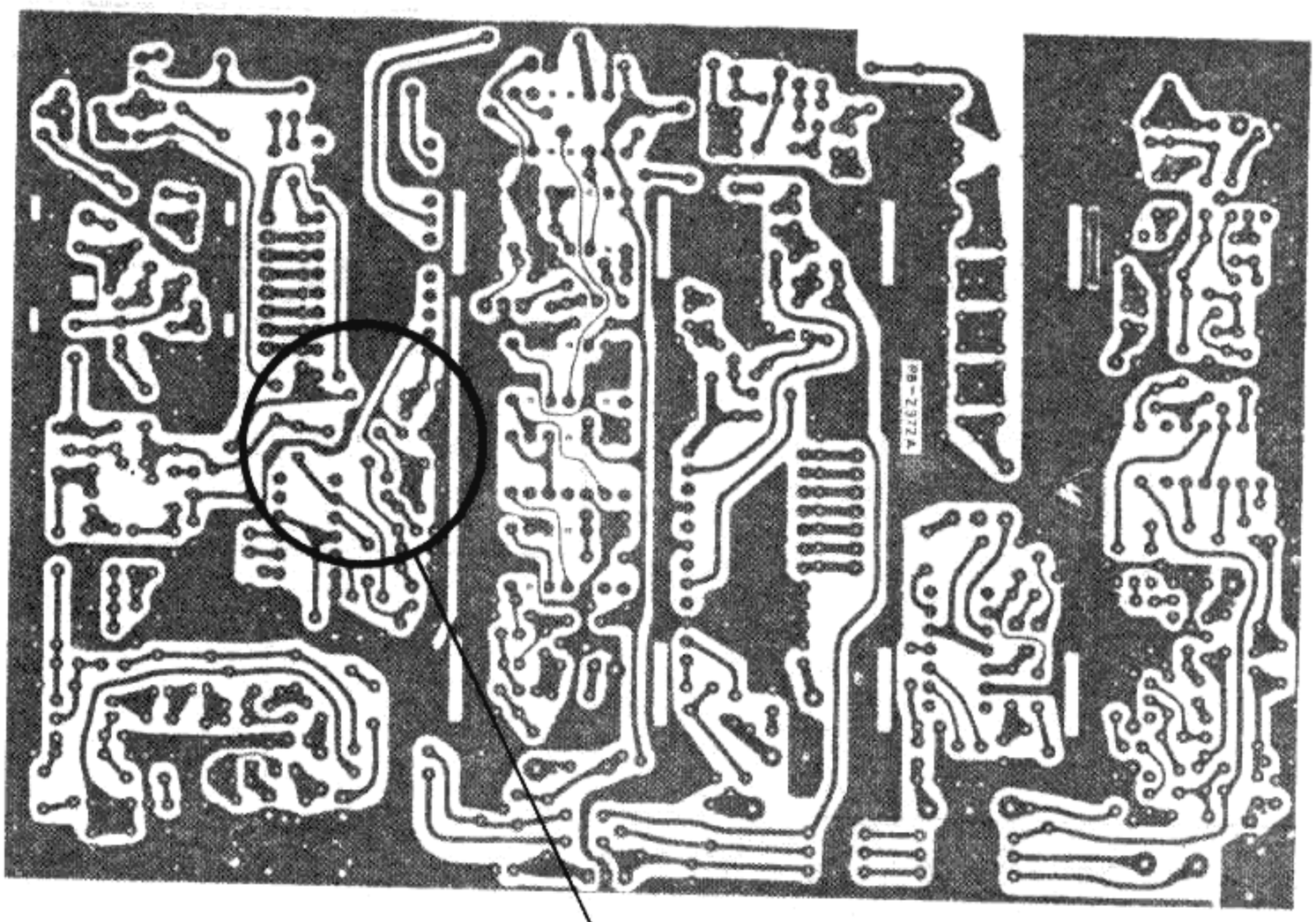

PLL/VCO UNIT Solder side

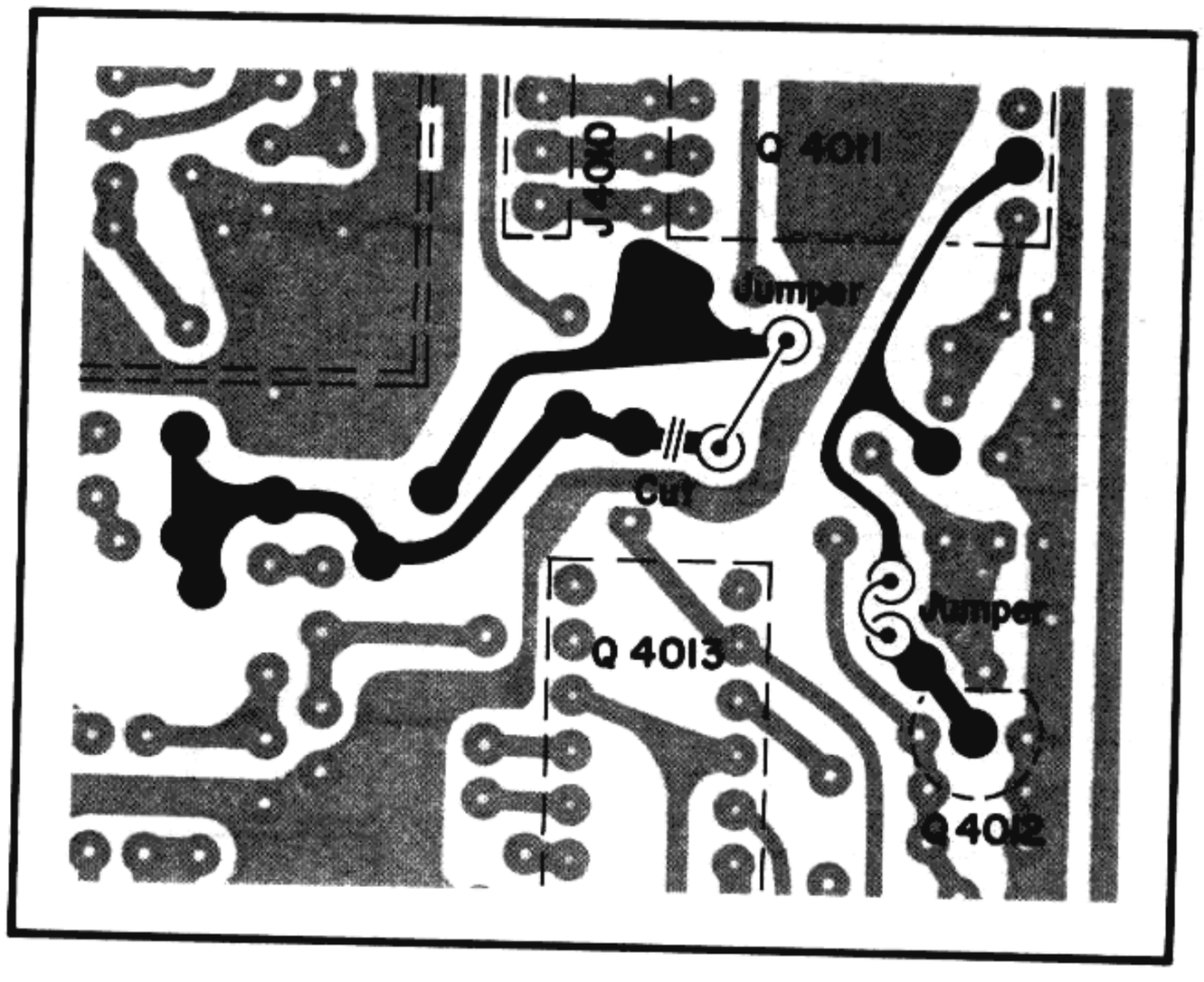

VFO UNIT

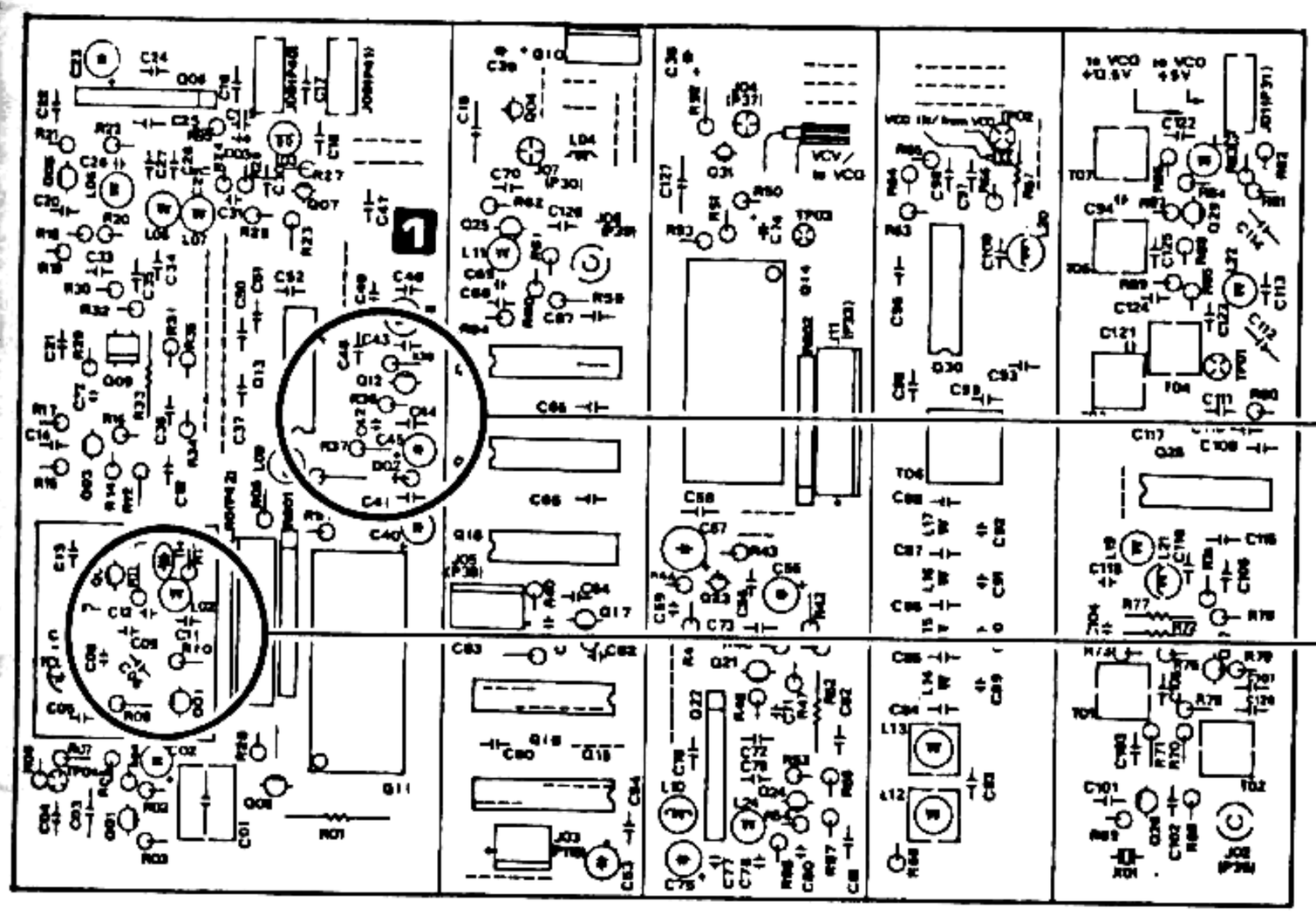

VFO UNIT (PB-2374A) Component side

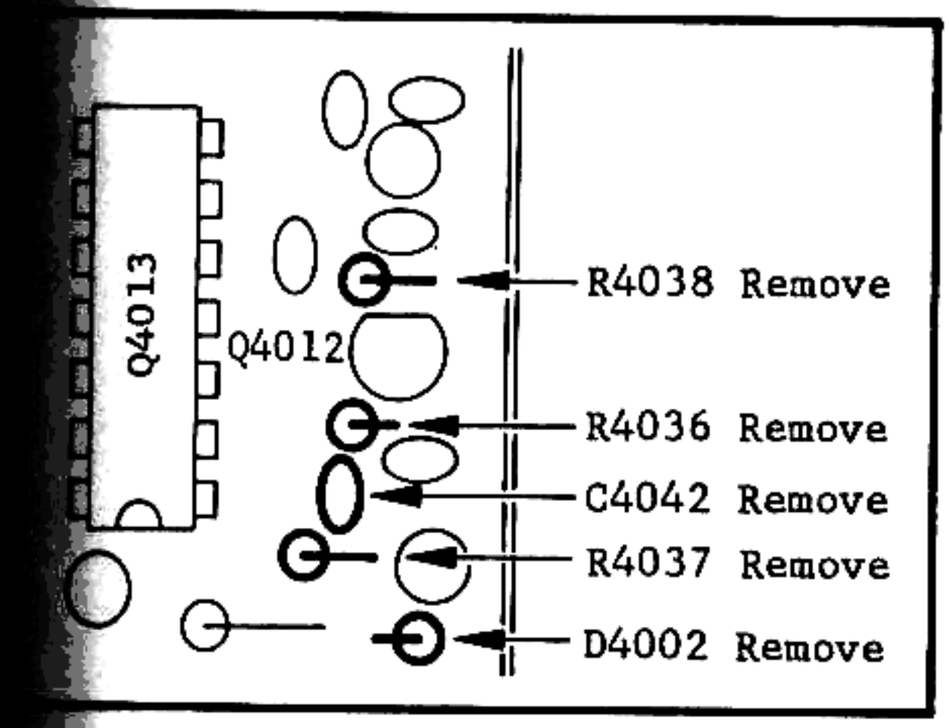

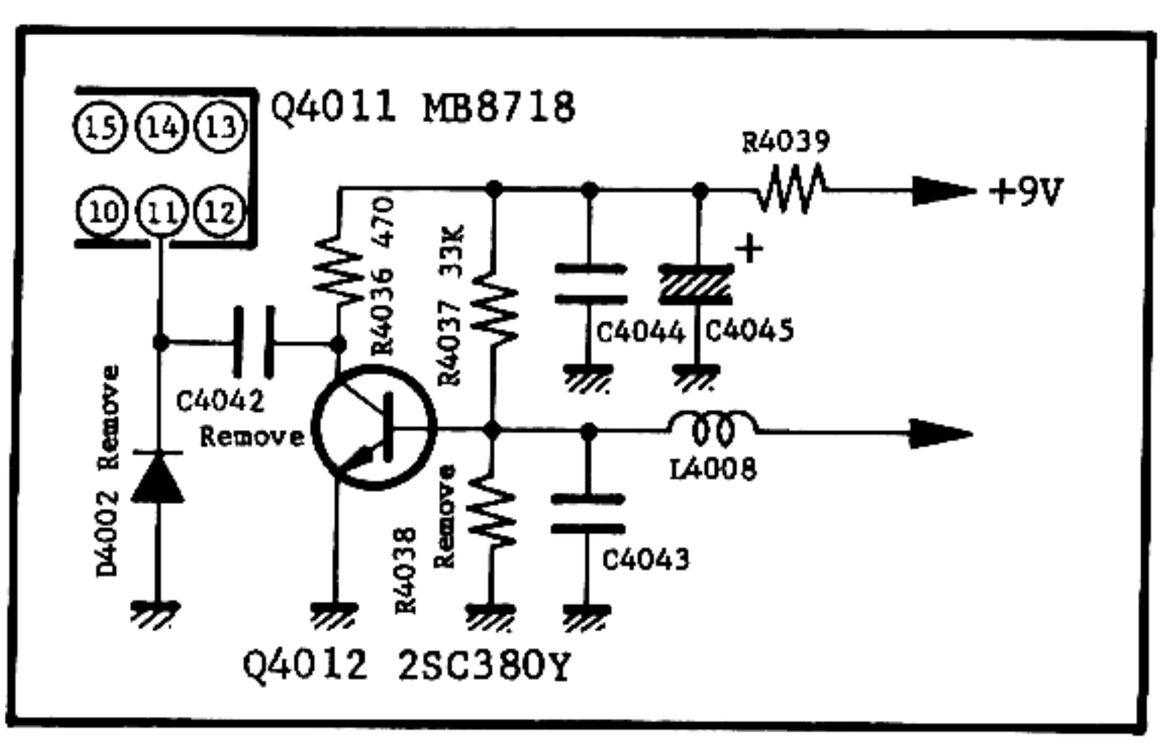

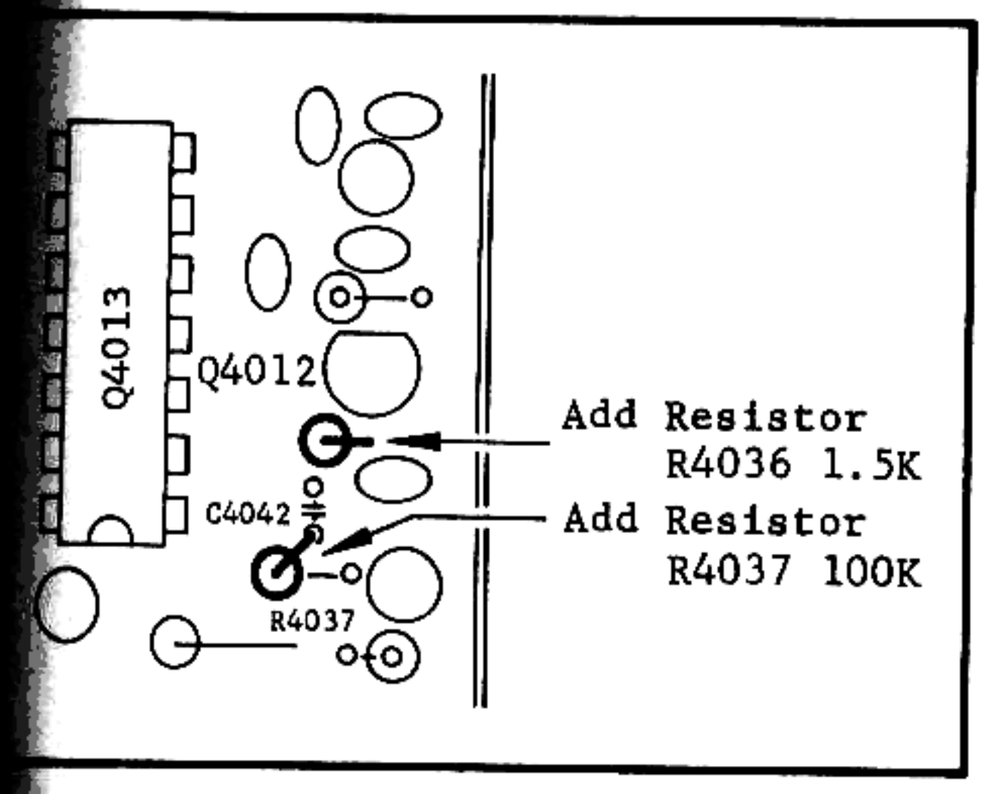

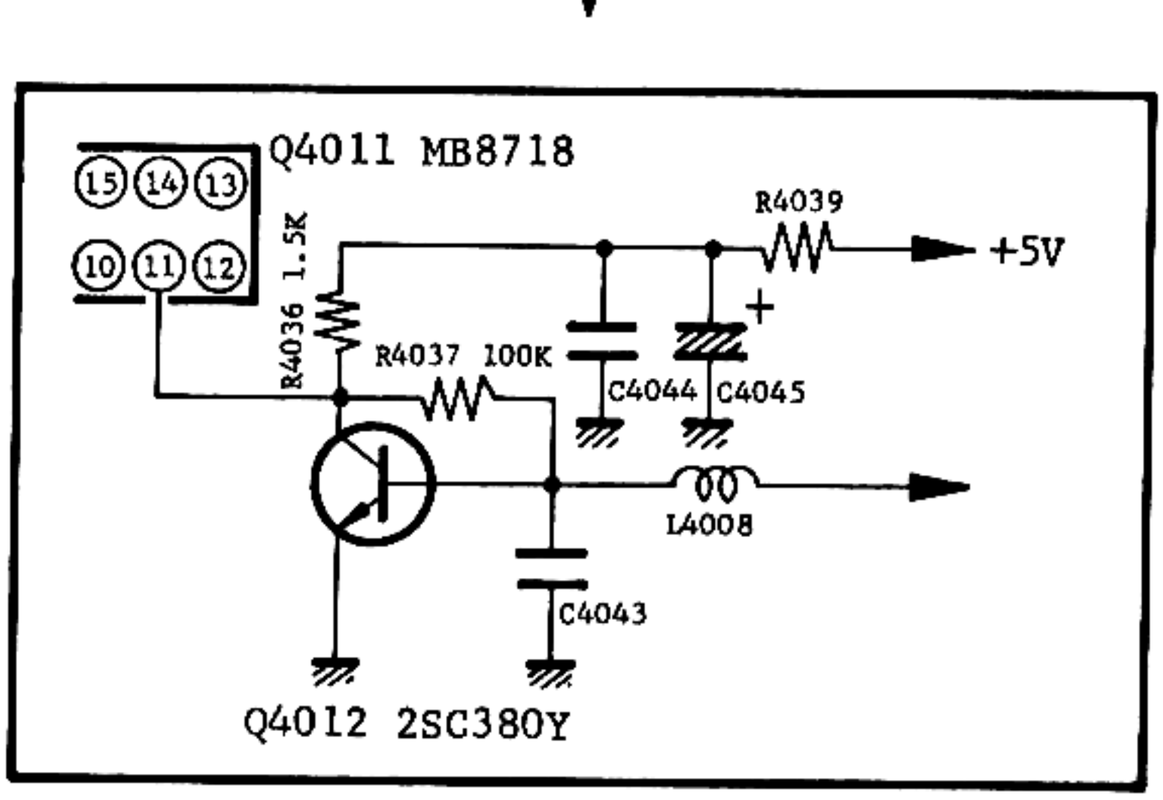

VCO (on VFO Unit)

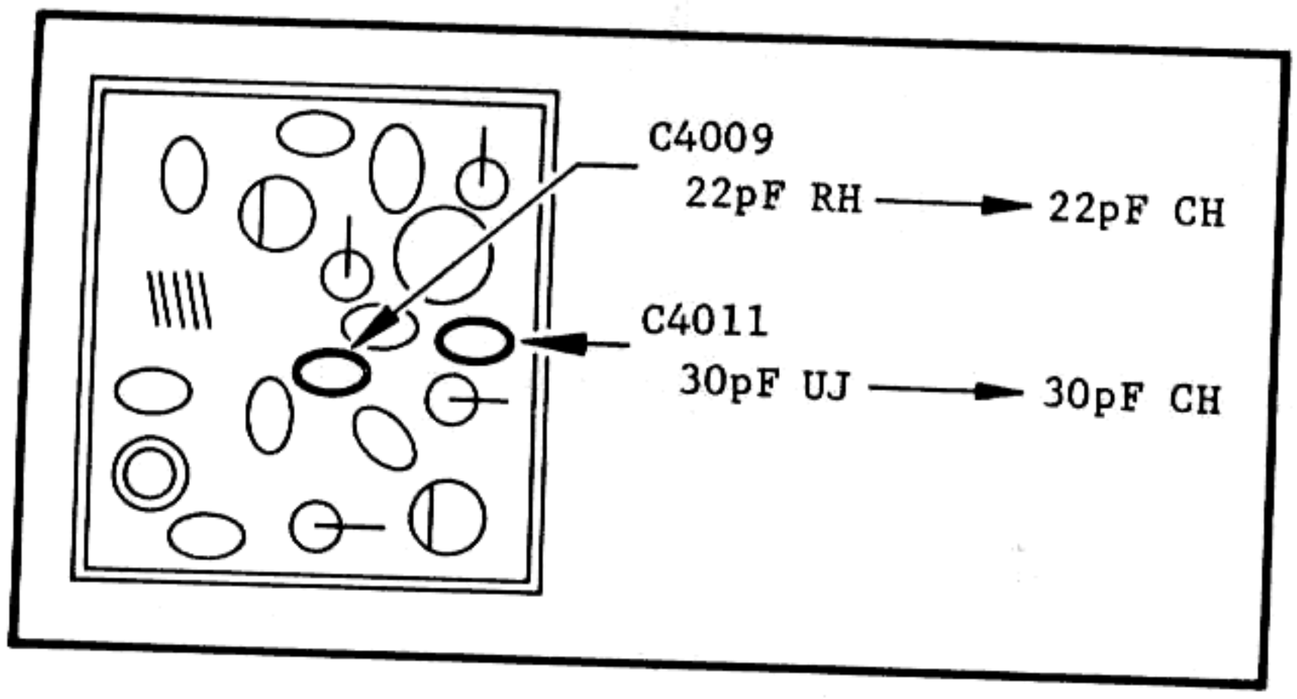

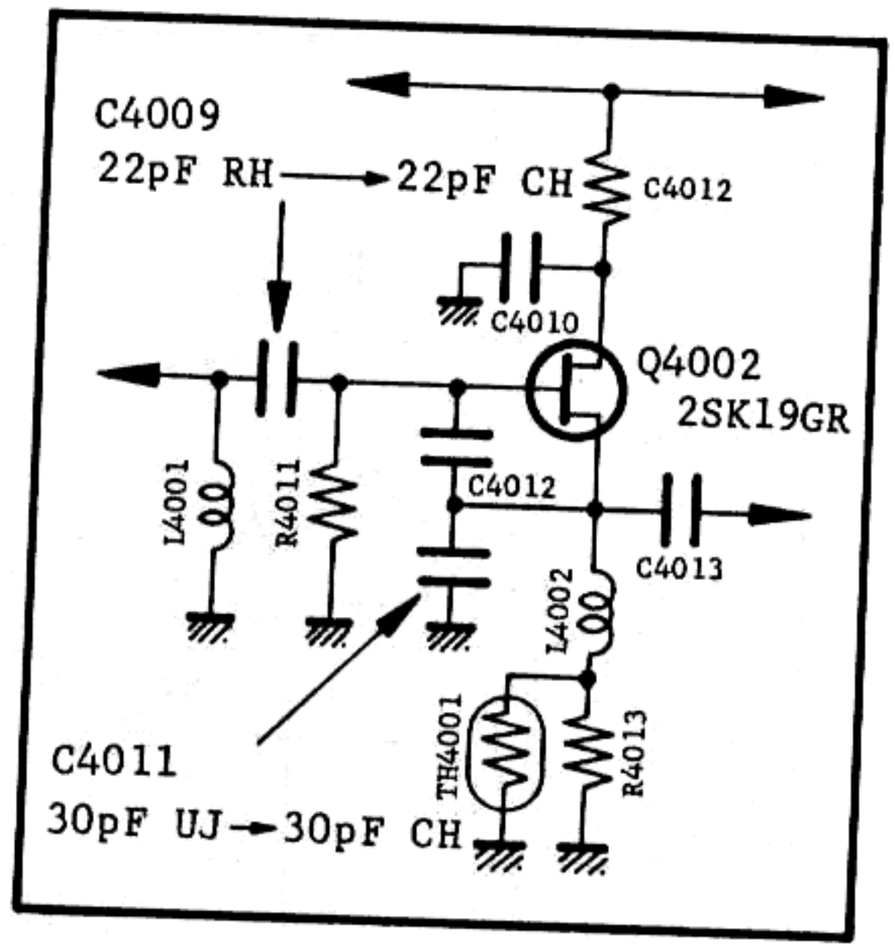

FSK UNIT

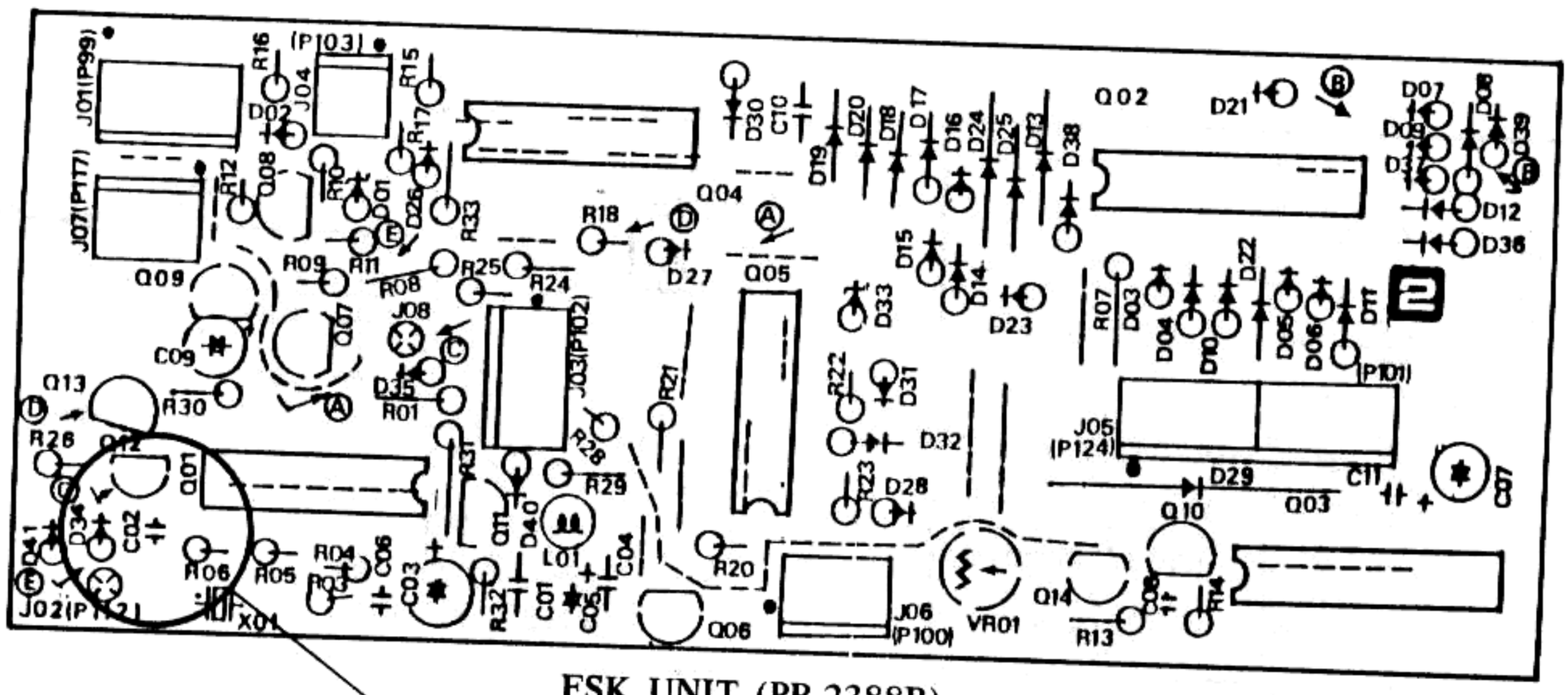

FSK UNIT (PB-2388B)

Component side

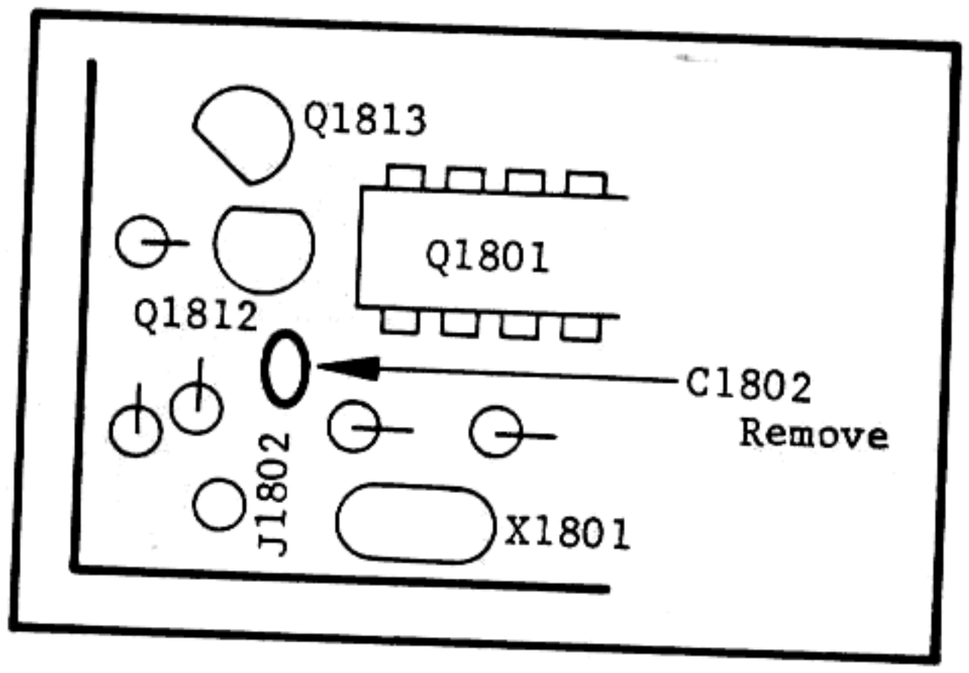

CAT SYSTEM SERIAL I/O DATA MANUAL FOR THE FT-980

The CAT (Computer-Aided Transceiver) System in the FT-980 allows use of an external microcomputer to control most of the operating functions of the transceiver. Control signal interface is via two serial data lines, accessible through the EXT CNTL jack on the rear of the transceiver. Yaesu offers a number of different Interface Units for making the necessary data format conversions to connect some of the common brands of microcomputers. Software is provided with the Yaesu Interface Units. The EXT CNTL jack also provides access to the receiver AGC line, for application in user's programs.

EXT CNTL PINOUT

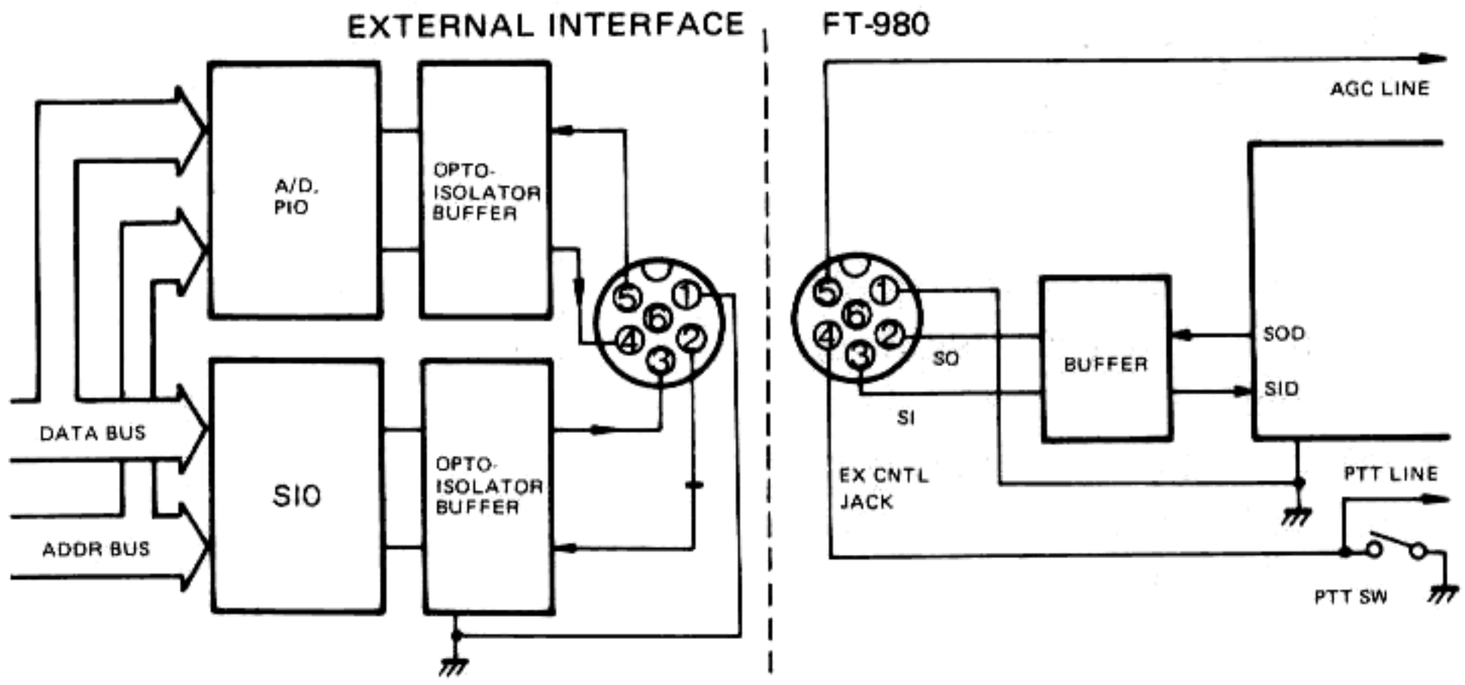

PIN	NAME	DESCRIPTION
1	GND	Common ground for signal lines and shielding.
2	SO	Serial Output: standard TTL-level data line.
3	SI	Serial Input: accepts standard TTL-level data.
4	PTT	Push-to-talk line: ground to transmit. Open circuit voltage is 13.5V DC.
5	AGC	Automatic Gain Control: analog signal output ranging from +0.4V DC during strong signal reception, to +2.6V DC when no signal is being received.
6	NC	no connection

DATA TIMING FORMAT
(4800 bits/second)

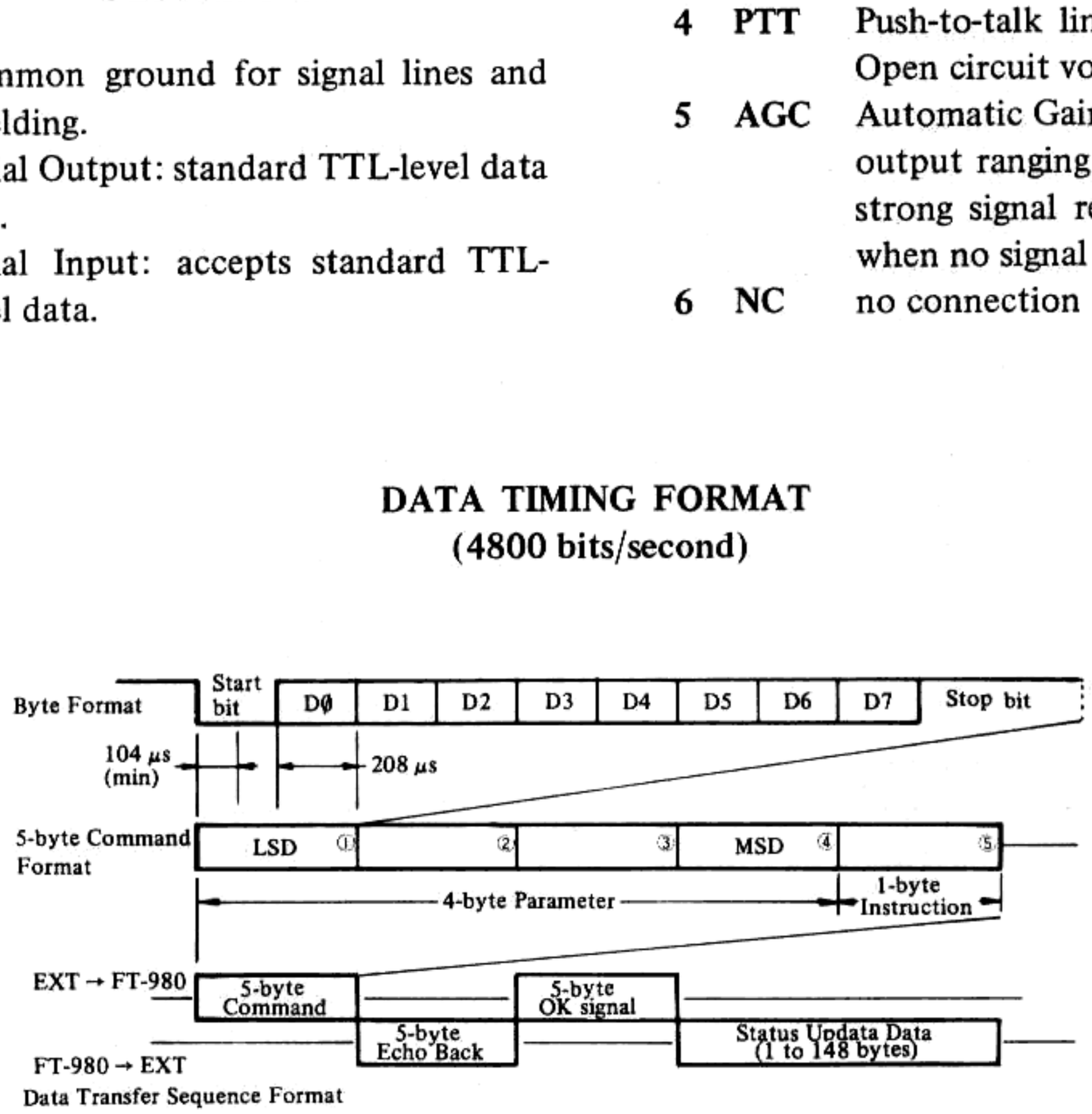

Data Transfer Sequence Format

Shown below are examples of two basic types of commands. Each is five bytes in length.

Frequency Command
(Example: to set 14.25000 MHz)

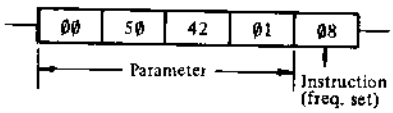

Mode Command
(Example: to select LSB mode)

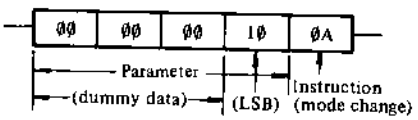

As illustrated in the Frequency Command example, frequency parameter data is sent least-significant digit first. The Mode Command example shows how dummy data ("ØØ") is required in some commands, preceding significant parameter bytes. See Table 2 (page 16) for a list of Command Byte Codes.

Once the 5-byte command has been sent to the transceiver, it will respond with an "Echo Back" of the same command, if received correctly. The computer should be programmed to compare this Echo Back with the command sent, and if these do not match, the command must be sent to the transceiver again, as an error has occurred. If the Echo Back is identical to the original command, the computer must send a 5-byte "OK" signal (four "ØØ" bytes followed by "ØB"). The FT-980 will then execute the instruction, and return 1, 5, 6, 22 or 148 "Status Update" bytes to the computer to update the transceiver status in memory and on the display (Tables 1 and 3). No dummy bytes are included in the Status Update data returned from the FT-980.

"OK" Signal Command

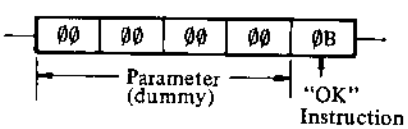

PROGRAMMING

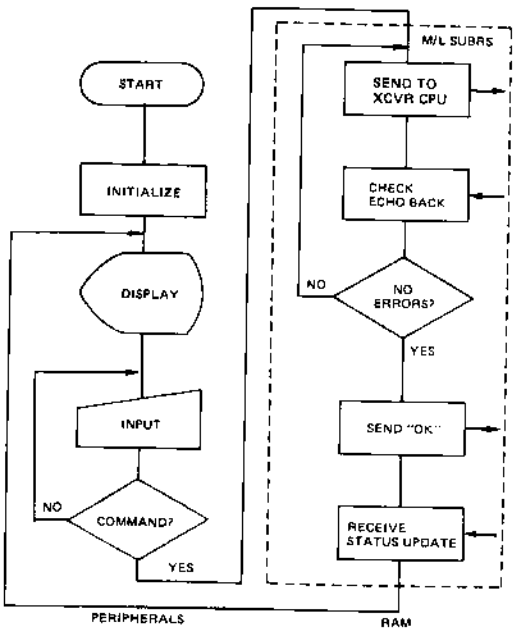

Data handling routines in the external computer should be in machine language, as BASIC and other high-level languages are generally too slow to handle the required routines during data transfer.

It is preferable to keep the command control of the FT-980 functions with the transceiver, and only switch to the external computer when necessary. The control source is switched by sending five "ØØ" bytes, which constitutes the External Control ON/OFF Command. When this is sent to activate control from the computer, all status data (148 bytes) will be returned. Once the computer has sent its command(s) and received the Update Status from the FT-980, control should be returned to the transceiver by again sending the External Control ON/OFF Command. While the external computer is in control, the related front panel controls on the FT-980 are disabled.

All commands must contain five bytes, so when no parameter (or a shortened parameter) is required, dummy ("ØØ") bytes must be inserted. Commands are exchanged in both directions, while Status Update data is unidirectional (from the FT-980 to the computer only), sent after the command has been executed by the transceiver. The length of the Status Update data depends upon the command executed, and can be 1, 5, 6, 22 or 148 bytes long, as indicated in Table 1.

TABLE 1. STATUS UPDATE DATA, BYTE FORMAT

Command Executed	Status Update Data Length	Status Update Bytes (see TABLE 3)
EXT CNTL ON/OFF	148	All (1–148)
STATUS CHECK	148	" "
+10 Hz	5	1–5
−10 Hz	5	"
IF WIDTH	1	23
IF SHIFT	1	26
FSK	1	24
RPTR SPLIT	6	1–5 and 25
FREQ SET	5	1–5
LDB	1	28
+100 Hz	5	1–5
−100 Hz	5	"
+5 kHz	5	"
−5 kHz	5	"
BAND UP	148	All (1–148)
BAND DOWN	148	" "
OTHERS (User Prog.)	22	1–22

Status Update Data does not include dummy bytes;
all bytes are significant.

TABLE 2. COMMAND BYTE CODES

Command	Instruction byte	Parameter*	Parameter info
EXT CNTL ON/OFF	ØØ		
ALL STATUS CHECK**	Ø1		
+10Hz	Ø2		
−10Hz	Ø3		
IF WIDTH	Ø4	ØØ ⟆ FE	7F=±0.00
IF SHIFT	Ø5	ØØ ⟆ 1E	0F=±0.0
FSK	Ø6	ØØ	AS PER FSK SHIFT SWITCH
		4Ø	425Hz
		8Ø	850Hz
		CØ	170Hz
REPEATER SPLIT		ØØ 8Ø 4Ø CØ 2Ø AØ EØ	SEE STATUS UPDATE BYTE 25 IN TABLE 3.
FREQ. SET	Ø8	xx xx xx xx	FREQ.
LDB	Ø9		
MEMORY CHANNEL	ØA	ØØ ⟆ ØF	
MODE SELECT	ØA	1Ø 11 12 13 14 15 16 17	LSB USB CWW CWN AMW AMN FSK FM
OFFSET	ØA	1B	

Command	Instruction byte	Parameter*	Parameter info
VFO STATUS SELECT	ØA	1C	RXM
		1D	RXV
		1E	MR
		1F	VFO
GENR VFO	ØA	21	
HAM VFO	ØA	22	
TAB U-SET	ØA	23	
TAB L-SET	ØA	24	
TAB ON/OFF	ØA	25	
TX CLAR	ØA	26	
RX CLAR	ØA	27	
MEMORY SHIFT	ØA	28	
MEMORY WRITE	ØA	29	
100Hz UP	ØA	18	
100Hz DWN	ØA	2Ø	
5kHz UP	ØA	2C	
5kHz DWN	ØA	2B	
BAND UP	ØA	2F	
BAND DWN	ØA	2D	
"OK" SIGNAL	ØB		***

* Parameter codes must include dummy bytes (ØØ) where required to make all parameter codes 4 bytes long.
Commands requiring one parameter byte have first three bytes as dummy.

** ALL STATUS CHECK returns entire contents of status memory in FT-980.

*** The "OK" Signal is required for execution of all commands, and it is not echoed back.

TABLE 3. STATUS UPDATE BYTE CODES (from FT-980)

BYTE NO.	BYTE CODES
1	STATUS FLAG BITS: 0 TX=1 RX=0; 1; 2; 3 SPLIT=1; 4; 5 VFO=1 MR=0; CLAR 6 UP=1, DWN=0; 7 ON=0, OFF=1
2–5	OPERATING FREQUENCY
6	MODE ØØ=LSB Ø1=USB Ø2=CWW Ø3=CWN Ø4=AM-W Ø5=AM-N Ø6=FSK Ø7=FM
7	VFO STATUS HAM/GEN/AUX ØØ=GEN 8Ø=HAM 81=AUX1 82=AUX2 83=AUX3
8–11	UPPER TAB (FREQ)
12–15	LOWER TAB (FREQ)
16	MEM CH SELECTOR POSITION (ØØ–ØF)
17	MODE SELECTOR POSITION (ØØ–Ø7)
18	XCVR OFFSET (Ø1=SPLIT, ØØ=SIMP)
19	SELECT SW ØØ=VFO, Ø2=RX M Ø1=MR, Ø3=RX V
20	TAB FLAG ØØ=OFF, 8Ø=ON
21	CLARIFIER FLAG: RX / TX — ØØ=OFF, / OFF; 2Ø=ON, / OFF; 4Ø=OFF, / ON; 6Ø=ON, / ON
22	MEM SHIFT ØØ=OFF Ø1=ON
23	IF WIDTH ØØ–FE (CTR=7F)
24	FSK SHIFT ØØ=INT 4Ø=425 8Ø=85Ø CØ=17Ø
25	REPEATER SPLIT CODE

DATA \ BAND	50 ≀ 54	70 ≀ 74	144 ≀ 148	220 ≀ 226	430 ≀ 440
ØØ	+1	±0	+0.6	+1.6	+5
8Ø	–1	±0	–0.6	–1.6	–5
4Ø	+1	±0	+0.6	+1.6	+7.6
CØ	–1	±0	–0.6	–1.6	–7.6
2Ø	+1	±0	+0.6	+1.6	+1.6
AØ	–1	±0	–0.6	–1.6	–1.6
EØ	±0	±0	±0	±0	±0

BYTE NO.	BYTE CODES
26	IF SHIFT ØØ–1E (CTR=ØF)
27	EXT CNTL ØØ=OFF, Ø1=ON
28	LDB FLAG ØØ=OFF, Ø1=ON
29	MODE OF SELECTED MEM CHANNEL (same code format as BYTE No. 6)
3Ø	VFO STATUS OF SELECTED MEM CH (same code format as BYTE No. 7)
31–34	MEMORY SHIFT FREQUENCY
35–38	MEMORY CLARIFIER FREQUENCY
39	MODE OF SELECTED VFO (same code format as BYTE No. 6)
40	VFO STATUS OF SELECTED VFO (same code format as BYTE No. 7)
41–44	HAM VFO FREQUENCY
45–48	GEN VFO FREQUENCY
49–52	CLARIFIER FREQUENCY
53–58	MEM CH1 FREQ., VFO STATUS and MODE
59–64	" CH2 "
65–7Ø	" CH3 " *MSD — LSD of FREQ.
71–76	" CH4 "
77–82	" CH5 "
83–88	" CH6 "
89–84	" CH7 " — FREQUENCY
85–1ØØ	" CH8 "
1Ø1–1Ø6	" CH9 "
1Ø7–112	" CH10 " — MSD of FREQ.
113–118	" CH11 "
119–124	" CH12 " — HAM/GEN/AUX Code (see BYTE 7)
125–13Ø	" CH13 "
131–136	" CH14 " LSD — MODE Code (see BYTE 6)
137–142	" CH15 "
143–148	" CH16 "

* Example of CH data:
USB, HAM, 14.25000MHz is coded as
01 81 01 42 50 00

UNIT LOCATIONS

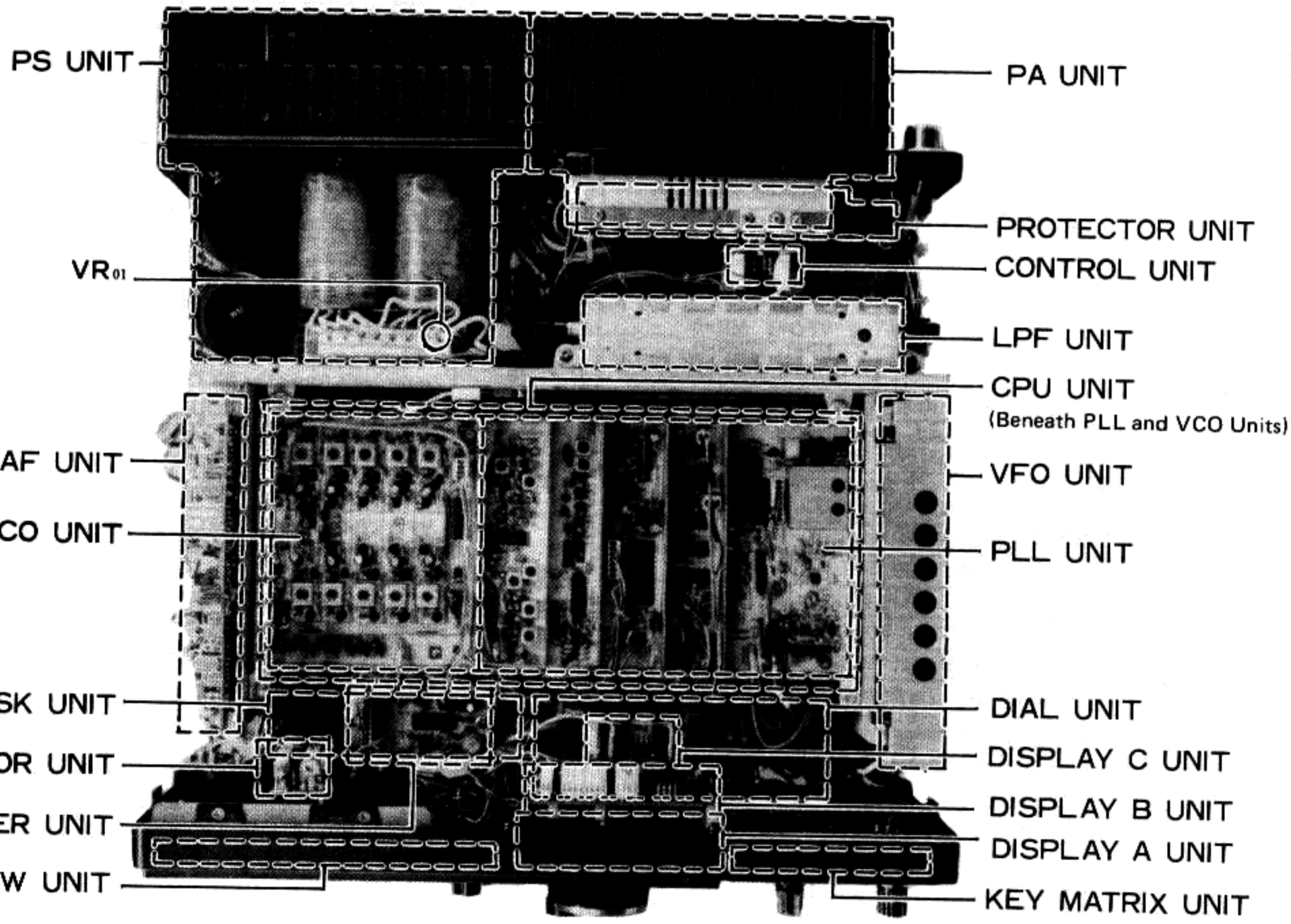

TOP VIEW

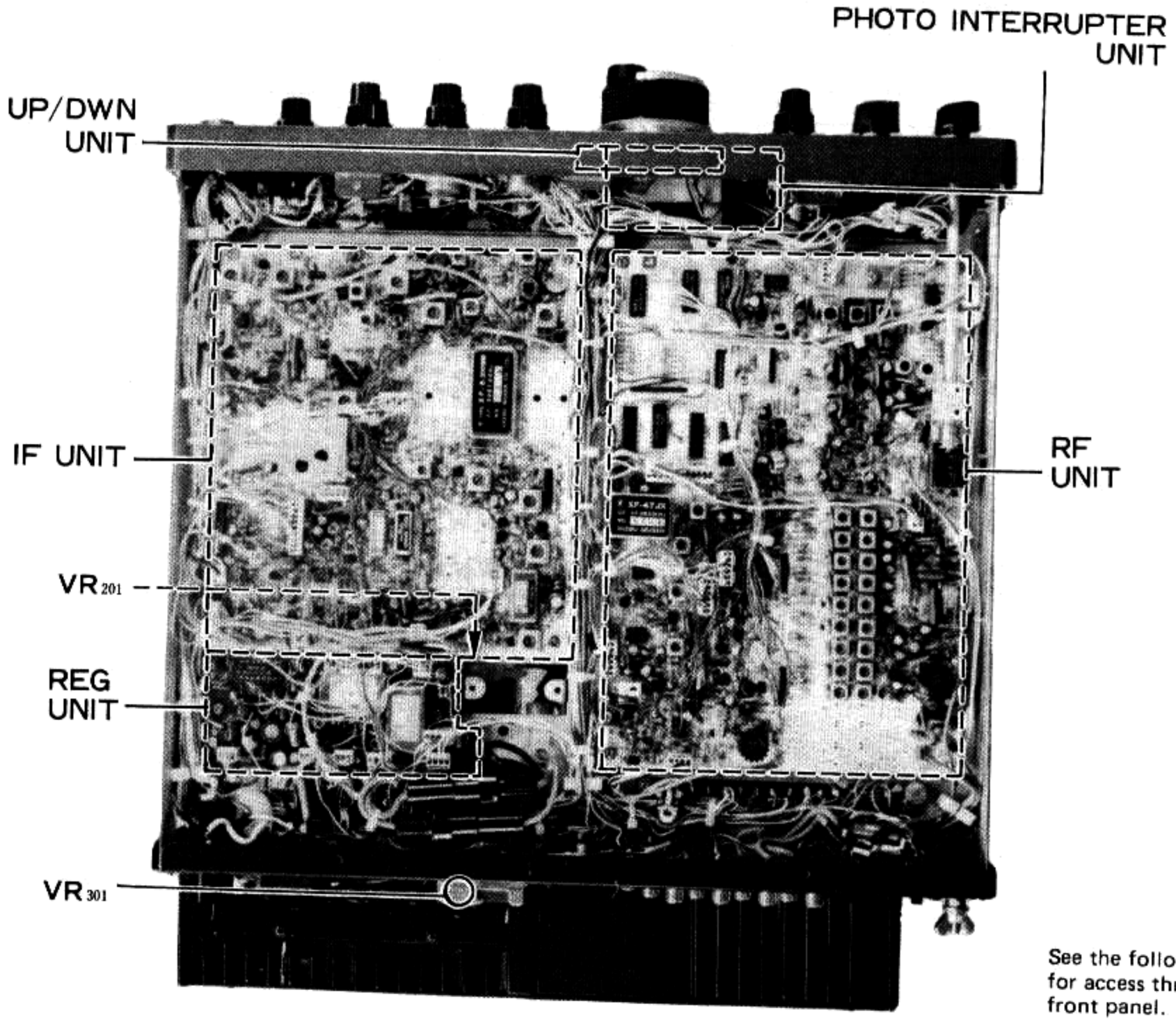

BOTTOM VIEW

See the following page for access through the front panel.

UNIT ACCESS THROUGH THE FRONT PANEL

The inside of the front panel and the units attached thereto can be easily accessed by performing the following steps:

1. Remove the top and bottom covers as shown on page 7.

2. With the transceiver placed on its side, loosen the two hex head setscrews at the front of the ATT selector shaft coupler, and slide the shaft out of the front panel.

3. Remove the upper front panel mounting screws (one on either side of the transceiver), and loosen the lower screws. The front panel may now be folded forward, with the lower screws serving as hinges.

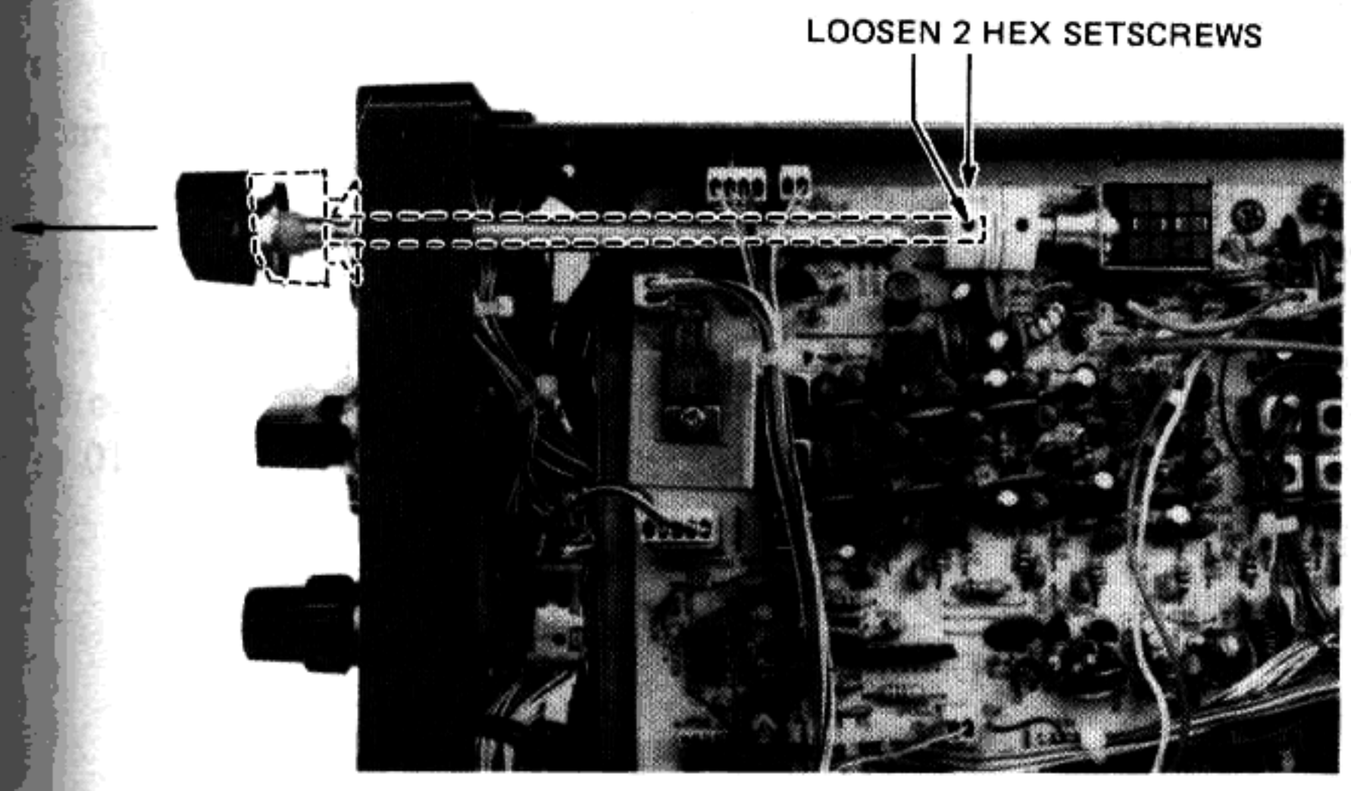

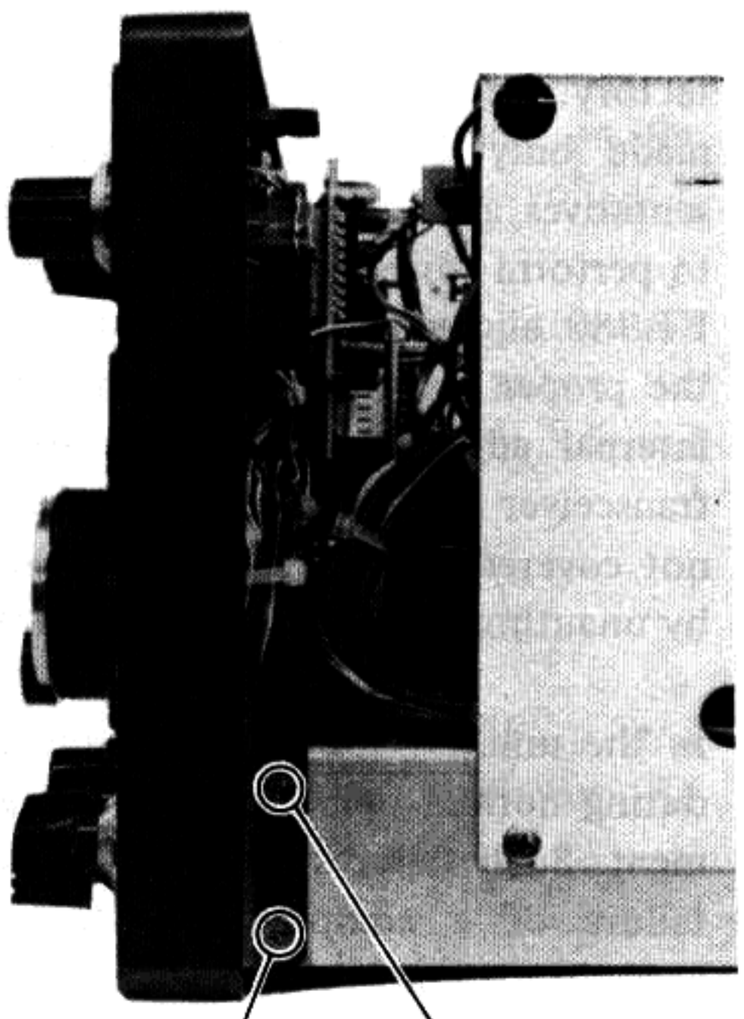

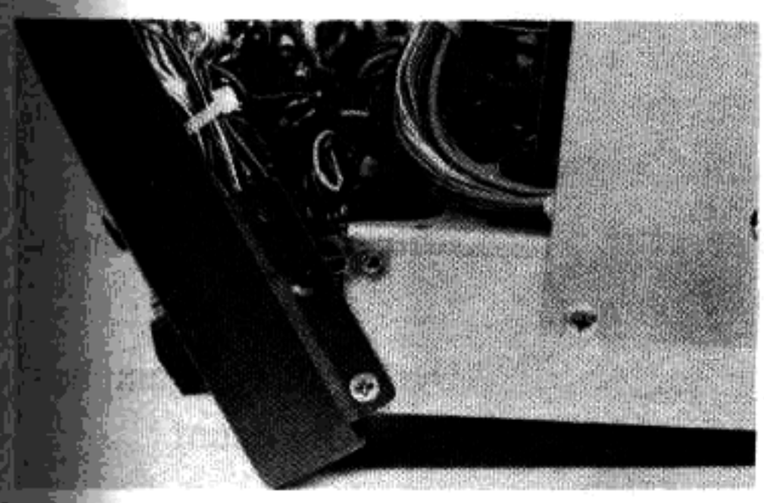

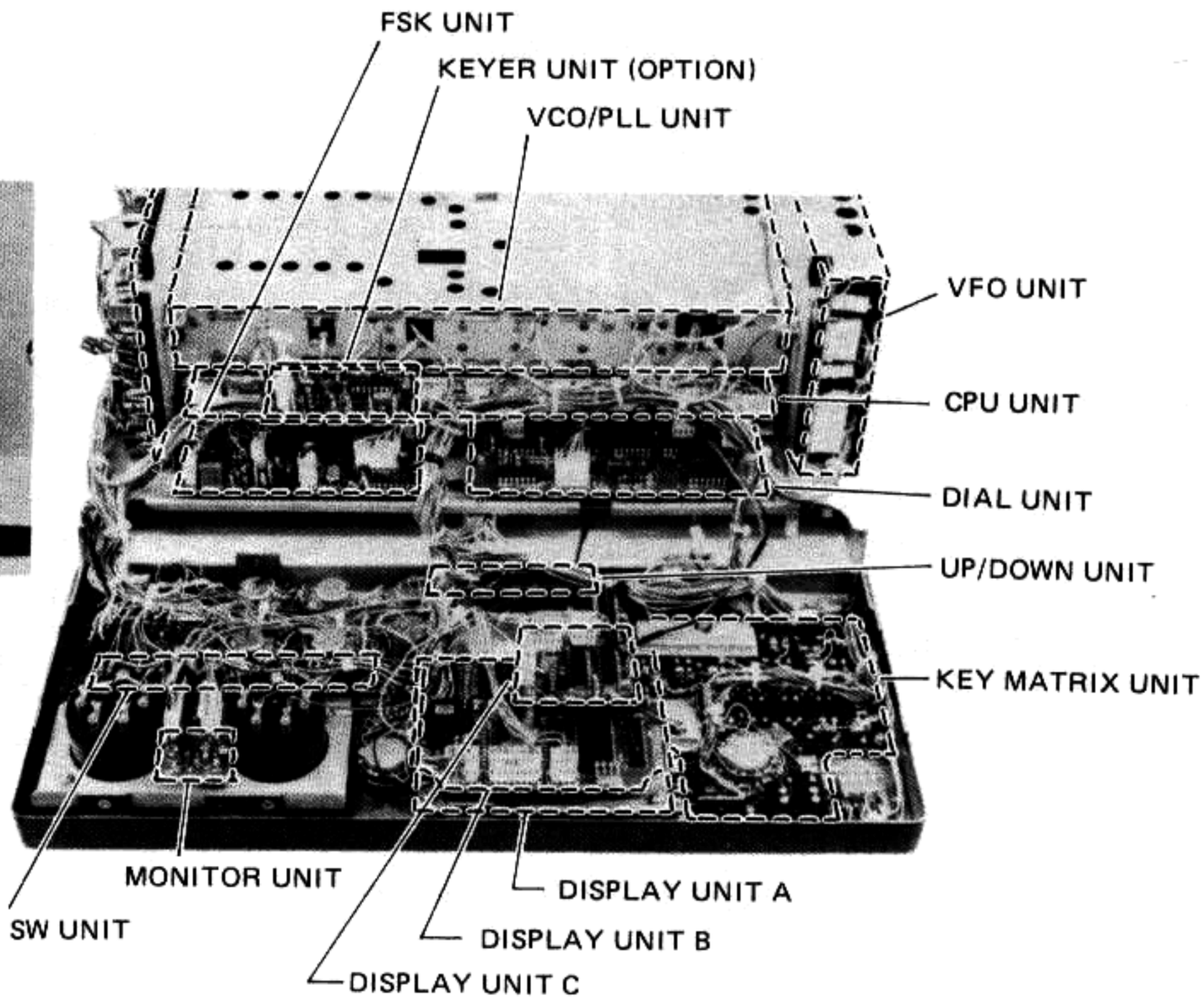

SERVICE AND ALIGNMENT

The FT-980 is carefully designed to allow the knowledgeable operator to make all adjustments required for various station conditions, modes and operator preferences simply from the controls on the front and rear panels, without opening the case of the transceiver. These adjustments are described in the FT-980 Operating Manual.

The following procedures cover the sometimes critical and tedious adjustments that are not normally required once the transceiver has left the factory. We recommend that these adjustments be made only by authorized Yaesu service representatives, as many are interdependent and difficult to perform correctly without prior experience with FT-980 alignment. Without such experience and the proper test equipment, any attempt to make internal adjustments is likely to cause degraded transceiver performance, the correction of which is not covered by the warranty policy when caused by unauthorized internal adjustments.

In the unlikely event that a sudden failure occurs during normal operation, do not attempt realignment. Such failures are almost always due to the failure of a component, often in an external accessory, or a problem with the antenna system. Once the external connections have all been checked, if the transceiver is still suspect, the Yaesu representative through whom the transceiver was originally purchased should be contacted immediately for instructions regarding repair. Authorized Yaesu service technicians automatically perform complete performance checks and realignment of all circuits that may be affected once a faulty component has been replaced.

Those who do undertake any of the following alignments are cautioned to proceed only at their own risk. Yaesu must reserve the right to change circuits and alignment procedures in the interest of improved performance, without notifying owners. Under no circumstances should any realignment be attempted unless the normal function and operation of the transceiver are clearly understood, the malfunction has been carefully analyzed and any faulty components replaced, and the need for a specific realignment determined to be absolutely necessary. Procedures not involving adjustments are termed checks, and are included for troubleshooting purposes.

The following test equipment (and thorough familiarity with its use) is required for complete alignment. While most steps do not require all of the equipment listed, the interactions of such adjustments may require that more complex adjustments be performed afterwards. Do not attempt to perform only a single step unless it is clearly isolated electrically from all other steps. Rather, have all test equipment ready before beginning, and follow all of the steps in the order that they are given in each section.

Alignment Equipment

Frequency counter with accuracy of 0.1 ppm to 100 MHz

DC voltmeter with at least 10-Megohm input impedance

RF voltmeter with at least 5% accuracy to 100 MHz, high impedance, and ranging from 10 mV to 3 Vrms

AF voltmeter

DC ammeter ranging to 20A

DC milliammeter ranging to 500 mA

Spectrum analyzer or monitor receiver capable of receiving 61–63 MHz; for 62 MHz Bandpass alignment

Sweep generator covering 5–30 MHz

X-Y oscilloscope with 35 MHz bandwidth

RF in-line wattmeter

Resistive dummy load, 50 ohms, 150W; three required for Reverse ALC alignment

RF signal generator covering 1–30 MHz, with calibrated output levels from 5 dBμ to 100 dBμ

AF signal generator with calibrated output levels from 1 mV to 25 mV

FM deviation meter/SINADer and RF sampling coupler ("T") for FM modulator alignment

Monitor scope for transmitter output display

Linear detector for 1–30 MHz

VFO UNIT

A. 30 MHz Coil

Connect the RF voltmeter to TP_{7008} and adjust T_{7011} for maximum RF voltage (nom. 140 mVrms).

B. 60 MHz Coil

Connect the RF voltmeter to pin 5 of Q_{7014} and adjust T_{7013} for maximum RF voltage (nom. 120 mVrms).

C. 90 MHz Coil

Connect the RF voltmeter to TP_{7007} and adjust T_{7012} for maximum RF voltage (nom. 120 mVrms).

D. Reference Oscillator

Note:
Allow the transceiver to sit for one hour with the power OFF in a constant ambient temperature between 15 and 25°C. Then switch the power ON and wait exactly 5 minutes before performing the following step.

Connect the frequency counter to TP_{7008} and adjust TC_{7001} for a reading of 30.000000 MHz, within a tolerance of +5 to −10 Hz.

E. 100 MHz VCO

1. Connect the DC voltmeter (10V range) to TP_{7005}.
2. Adjust the main tuning knob to the point that provides the maximum voltage on the meter, and adjust T_{7001} so that this voltage is exactly 6V.
3. Check VCV operation by readjusting the main tuning knob for minimum voltage on the meter, which should be between 3.5 and 4.5V.

F. 20 MHz Bandpass Filter

Connect the RF voltmeter to TP_{7001} and adjust T_{7002} and T_{7003} for maximum RF voltage (nom. 18 mVrms).

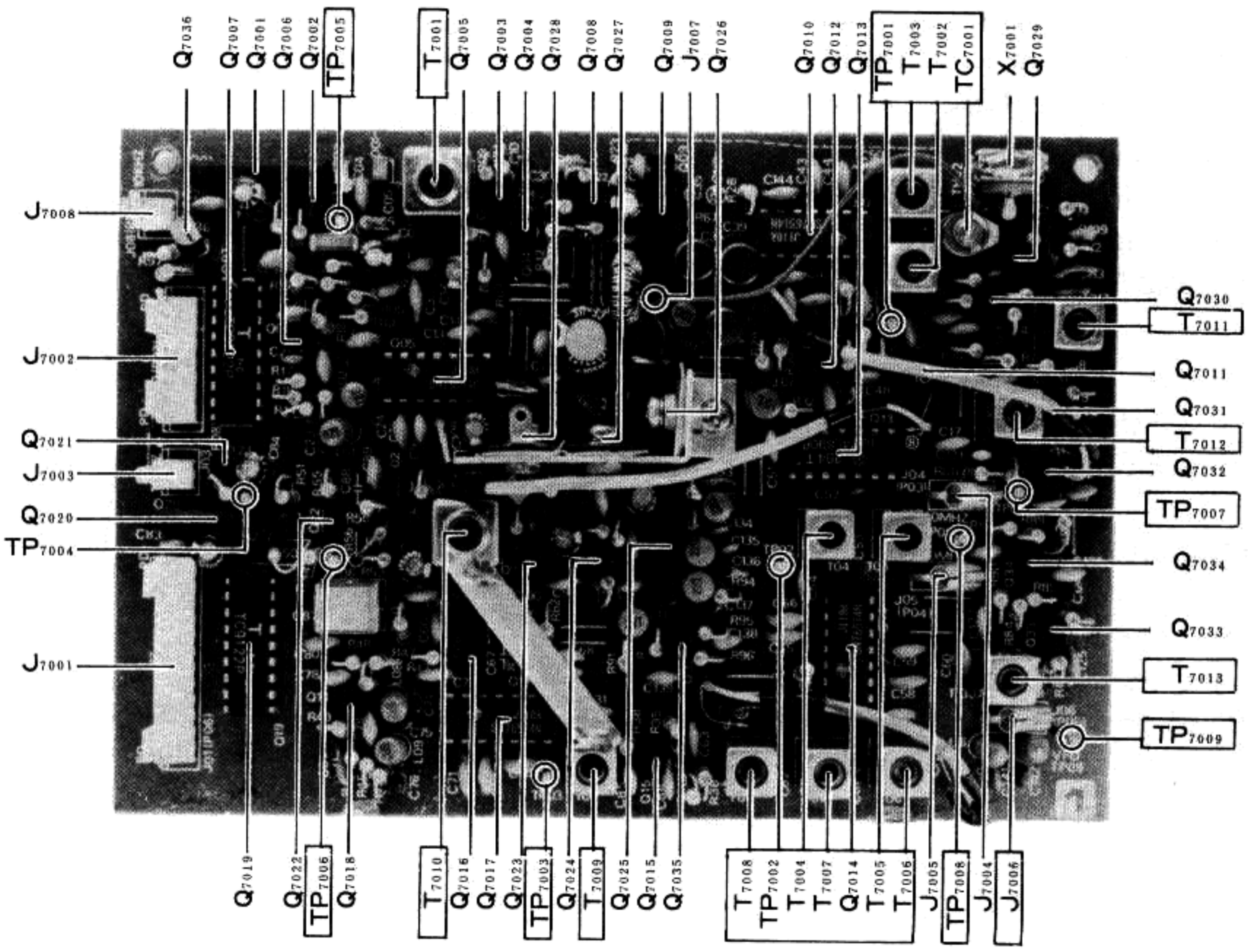

VFO UNIT

G. 2 MHz Bandpass Filter

Connect the RF voltmeter to TP_{7002} adjust T_{7004} and T_{7005} for maximum RF voltage (nom. 80 mVrms).

H. 62 MHz Bandpass Filter

1. Connect the spectrum analyzer (or test receiver) to TP_{7003} and tune to the signal at 62 MHz ± 20 kHz.
2. Adjust T_{7006} –T_{7009} for peak signal strength, and then connect the RF voltmeter to verify that the signal level is at least 200 mVrms.

I. 55 MHz VCO

1. Connect the DC voltmeter to TP_{7006}. Set the transceiver to USB and tune for a display of xx.499.99 MHz. Set the IF SHIFT control to the 12 o'clock position.
2. Adjust T_{7010} for an indication of 6.0V on the voltmeter, and check the VCV by tuning to xx.000.00 MHz. The voltmeter should now indicate 1.5–2.5V.

J. VFO Output Level Check

1. Remove P_{05} from jack J_{7006}, and connect a 50-ohm resistive load across the jack. Connect the RF voltmeter to TP_{7009}.
2. Tune the main knob for maximum, and then minimum RF voltage indication, and calculate the voltage midway between these points, which should be in the range of 140 to 200 mVrms.
3. Calculate the differences between the midway voltage and the two measured extremes. These should each be less than 70 mV.

K. VFO Output Frequency Check

1. Connect the frequency counter to TP_{7009}. Tune the transceiver for either xx.000.00 or xx.500.00 on the display, and ensure that the IF SHIFT control is centered.
2. Referring to the Table, check the counter reading in each mode and for each CW pitch in transmit.
3. Tune the transceiver one step (10 Hz) lower and recheck each mode and pitch for a 10 Hz decrease in counter reading.
4. Move the IF SHIFT control one step, and check for a 100 Hz shift on the counter.

VFO Output Table

	USB	LSB	FSK	AM, FM	CW·RX	CW·TX(PITCH)
XX.000.00 (XX.500.00)	MHz 4.98901	MHz 4.98601	MHz 4.98551	MHz 4.98751	MHz 4.98831	MHz 4.98881(500Hz) 4.98891(600Hz) 4.98901(700Hz)
XX.499.99 (XX.999.99)	MHz 5.48900	MHz 5.48600	MHz 5.48550	MHz 5.48750	MHz 5.48830	MHz 5.48880(500Hz) 5.48890(600Hz) 5.48900(700Hz)

PLL and VCO UNITS

A. 38.0675 MHz Crystal Oscillator

Remove P_{35} from jack J_{4002}, and connect a 50-ohm resistive load across the jack. Connect the RF voltmeter to J_{4002}, and adjust T_{4001} for peak voltmeter deflection. Then rotate the core of T_{4001} one turn counterclockwise from the point of the peak.

B. PLL IF Passband

1. Connect the sweep generator to J_{4001}, and the oscilloscope through the detector to TP_{4001}.
2. Adjust the generator, and then T_{4003} and T_{4004}, to obtain the passband shown below.

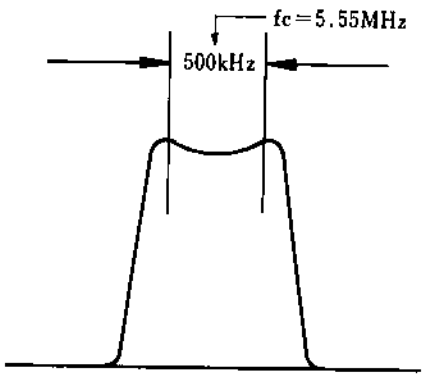

Passband Illustration

3. Move the oscilloscope connection to TP_{4002}, and adjust T_{4005}, T_{4007} and T_{4003} and T_{4004} (again, if necessary), for the passband illustrated.

C. VCO Coils

1. Connect the DC voltmeter (10V scale) to TP_{5001}, and set the transceiver to the GEN VFO mode.
2. Referring to the following Table, tune the transceiver to the indicated frequency, and adjust the corresponding coil for the alignment voltage. Then tune to the corresponding check frequency, and check for at least the minimum low end voltage shown.

Frequency	Coil	Alignment V.	Check frequency	Low end V.
1.999(MHz)	T_{5001}	5.5V	0.000(MHz)	more than 2.0V
4.999	T_{5002}	6.0V	2.001	more than 2.5V
7.999	T_{5003}	7.0V	5.001	more than 3.0V
10.999	T_{5004}	7.0V	8.001	more than 3.0V
13.999	T_{5005}	7.0V	11.001	more than 3.0V
16.999	T_{5006}	7.0V	14.001	more than 3.0V
19.999	T_{5007}	7.0V	17.001	more than 3.0V
22.999	T_{5008}	7.0V	20.001	more than 3.0V
25.999	T_{5009}	7.0V	23.001	more than 3.0V
29.999	T_{5010}	7.0V	26.001	more than 2.0V

VCO Coil Alignment Table

D. BFO VCV

1. Connect the DC voltmeter to TP_{4004}. Set the transceiver to USB, and the IF SHIFT control fully counterclockwise.
2. Adjust TC_{4001} for 6.0V on the meter. Then switch to LSB, rotate the IF SHIFT control fully clockwise, and check for 3–4V on the meter.

E. BFO Frequency Check

1. Connect the frequency counter through a 10 pF capacitor to the anode of D_{4003}. Set the CW Sidetone Pitch switch to the 700 Hz position.
2. Referring to the following Table, set the IF SHIFT control as indicated, and check the counter frequency for each mode, which should match that shown in the Table.

BFO Frequency Check Table

IF SHIFT	LSB	USB	CW	AM	FSK	FM
	MHz	MHz	MHz	MHz	MHz	MHz
fully counterclockwise	8.9875	8.9905	8.9905	8.9890	8.9870	8.9890
12 o'clock position	8.9860	8.9890	8.9890	8.9875	8.9855	8.9875
fully clockwise	8.9845	8.9875	8.9875	8.9860	8.9840	8.9860

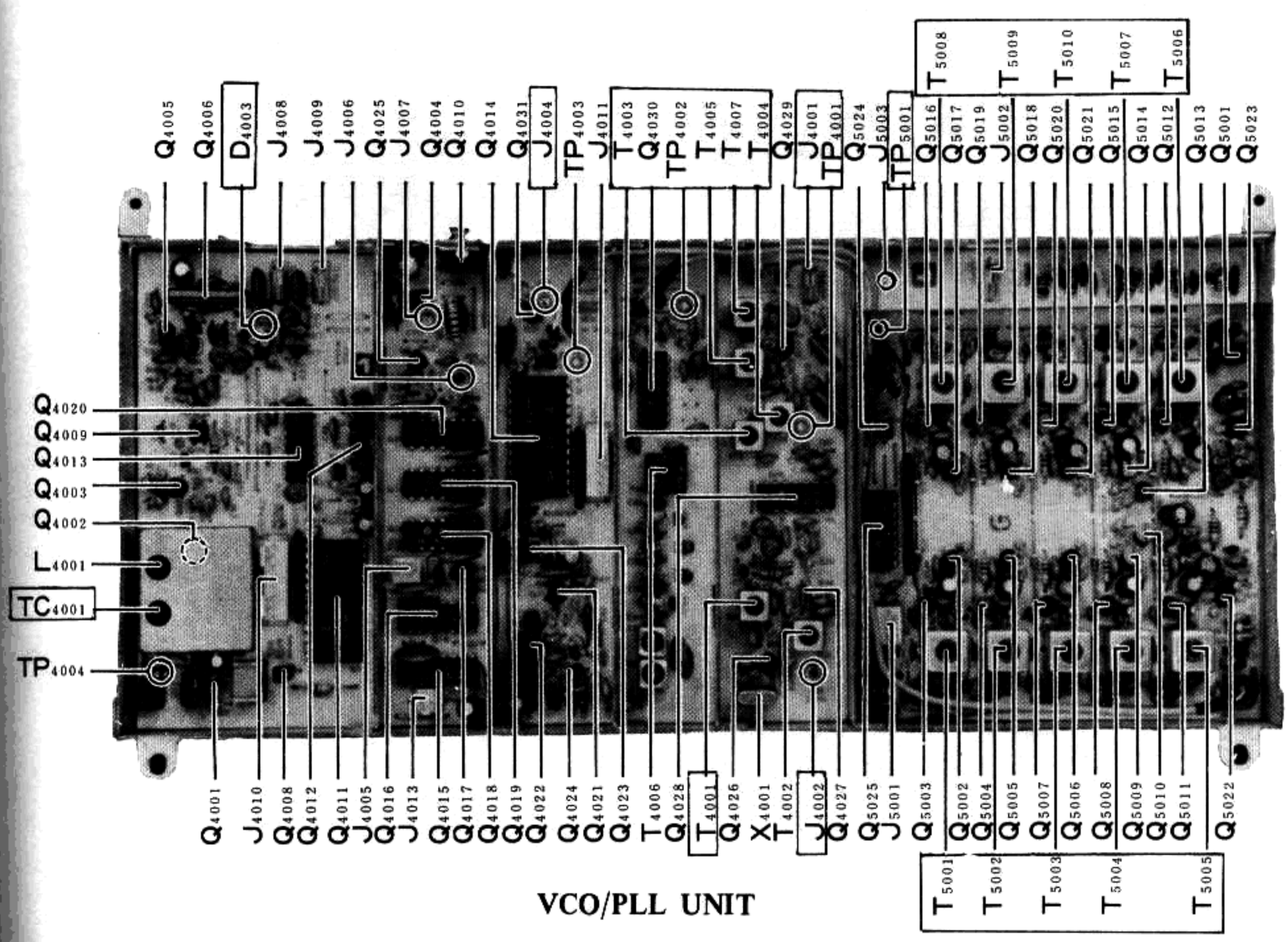

VCO/PLL UNIT

RF UNIT

A. Bandpass Filters

1. Connect the sweep generator to the ANT jack, and connect the oscilloscope through the detector to TP_{1001}. Set the transceiver to the HAM VFO mode.
2. Referring to the accompanying Table, adjust the transformer pair corresponding to each band for the appropriate illustrated bandpass.

B. First IF Transformers

Set the MARKER switch on and tune the transceiver for peak S-meter deflection. Adjust T_{1029} and T_{1030} for peak S-meter deflection.

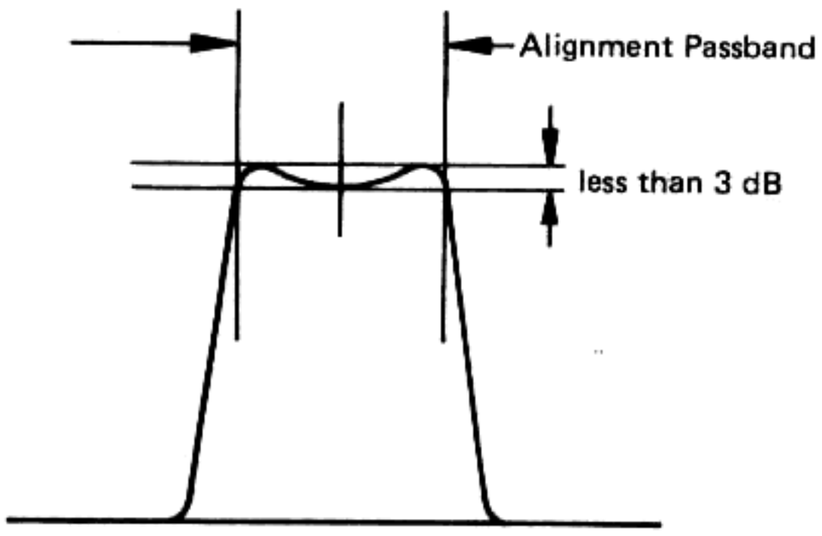

Passband Illustration A

Bandpass Filter Alignment Table

BAND	TRANS FORMER	ALIGNMENT PASSBAND	Passband Illustration
1.9MHz(160m)	T_{1003}, T_{1004}	1.8−2.0(MHz)	A
3.5MHz (80m)	T_{1005}, T_{1006}	3.5−4.0	A
7MHz (40m)	T_{1007}, T_{1008}	7.0−7.5	A
10MHz (30m)	T_{1009}, T_{1010}	10.0−10.5	A
14MHz (20m)	T_{1011}, T_{1012}	14.0−14.5	A
18MHz (17m)	T_{1013}, T_{1014}	18.0−18.5	B
21MHz (15m)	T_{1015}, T_{1016}	21.0−21.5	B
24.5MHz (12m)	T_{1017}, T_{1018}	24.5−25.0	B
28MHz (10m)	T_{1019}, T_{1020}	28.0−30.0	B

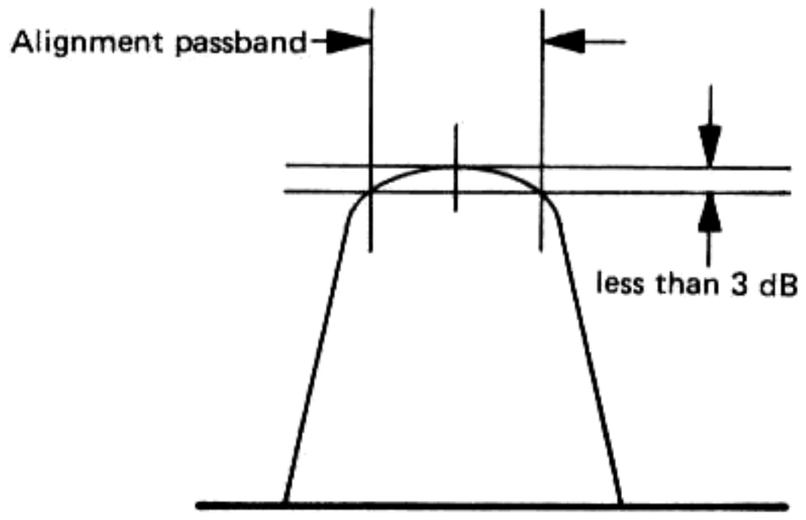

Passband Illustration B

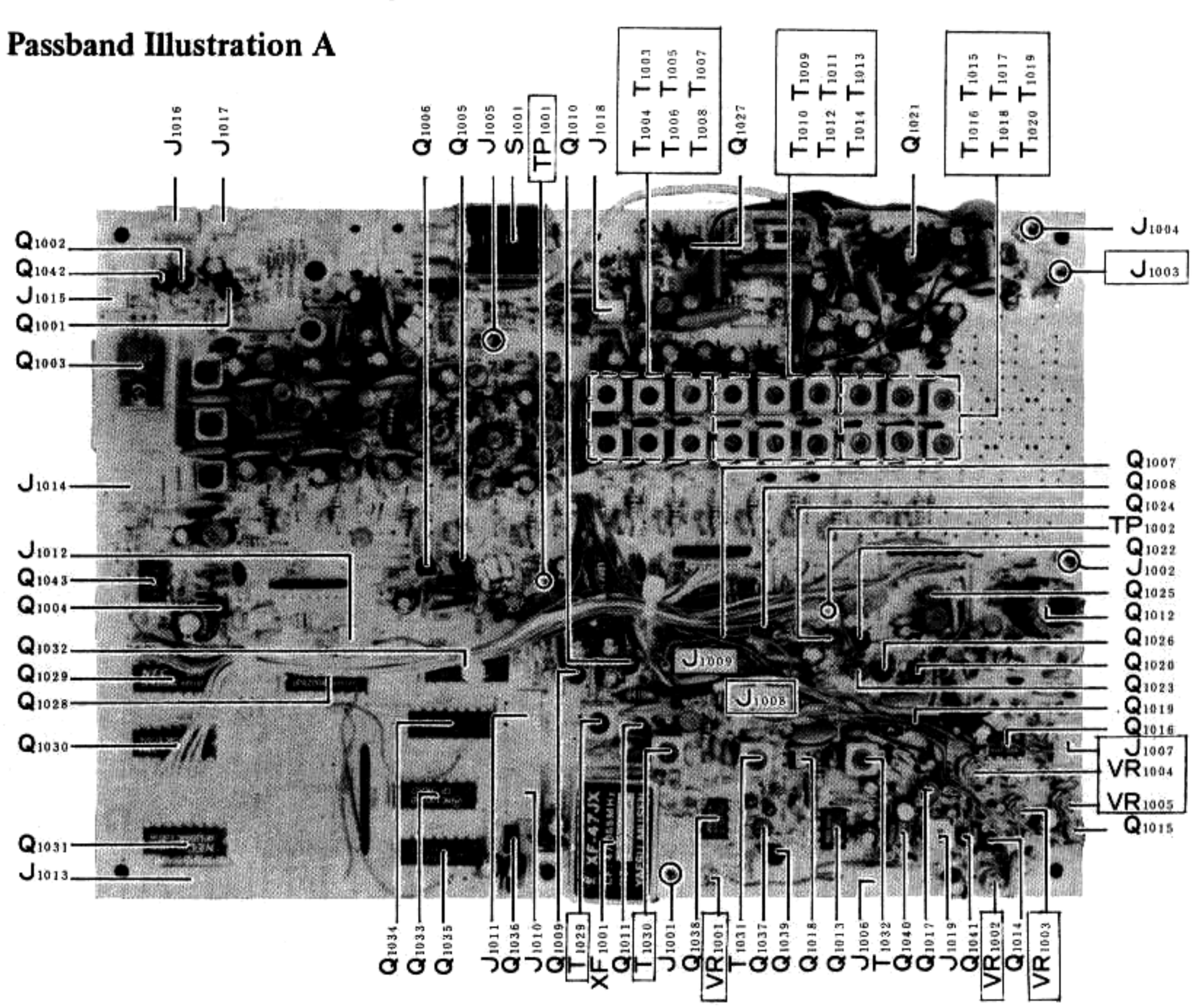

RF UNIT

Passband Illustration
A
A
A
A
A
B
B
B
B

IF UNIT

A. 2nd Local Buffer

Connect the RF voltmeter to TP_{2001} and adjust T_{2013} for maximum RF voltage (nom. 1 Vrms).

B. IF Width Oscillator and Buffer

1. Connect the RF voltmeter to TP_{2002} and adjust T_{2014} for maximum RF voltage (nom. 1 Vrms).
2. Connect the frequency counter to TP_{2002}, and set the WIDTH control to the center detent. Adjust L_{2014} for 8.532500 MHz on the counter.

C. IF Transformers

Using the Marker signal, adjust T_{2001} –T_{2009}, T_{2013} and TC_{2001} for maximum S-meter deflection.

D. Noise Blanker IF

1. Connect the signal generator to the ANT jack, and the RF voltmeter to TP_{2004}. Set the generator to the transceiver frequency, and output level between 30 and 50 dBμ. Adjust T_{2011} and T_{2012} for peak RF voltage on the meter.
2. Reduce the output level of the signal generator, and repeak T_{2011} and T_{2012} for maximum RF voltage.

E. FM IF Transformer

With the signal generator connected as above, again set for 30–50 dBμ output. Connect the RF voltmeter to TP_{2003} and adjust T_{2010} for peak RF voltage. Reduce the generator output if saturation occurs.

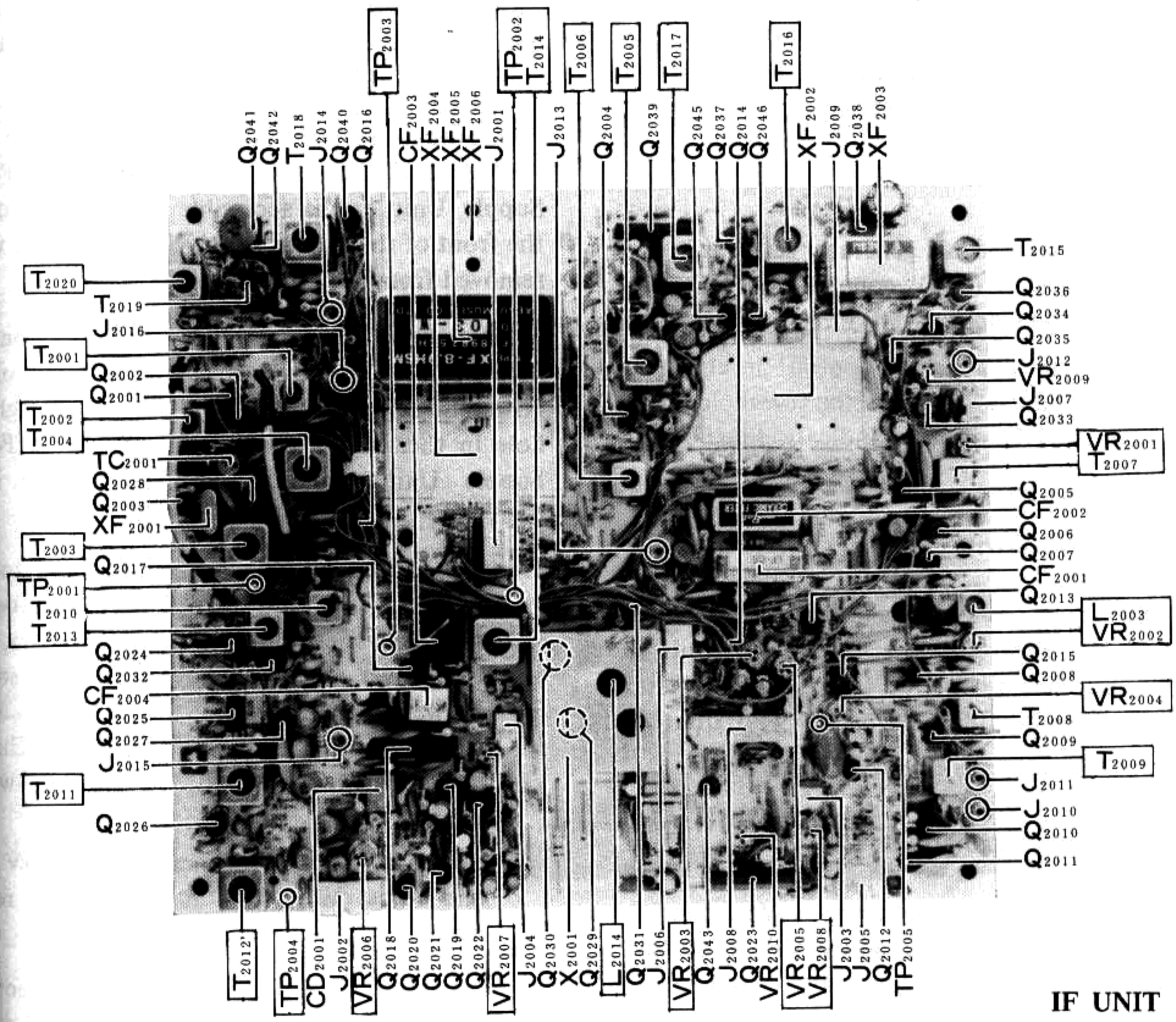

IF UNIT

F. Notch

1. With the transceiver set to USB and the NOTCH control set to the 12 o'clock position, switch the Marker on and tune for a heterodyne of 1500 Hz.
2. Turn the NOTCH switch ON and adjust L_{2003} for minimum deflection on the S-meter.

G. Squelch Preset

Set the transceiver to FM, and the SQL control to the 10 o'clock position. With no equipment connected to the ANT jack, adjust VR_{2006} just to the point where the noise is squelched.

H. IF System Gain

1. Set the transceiver to the HAM VFO mode, 14 MHz. Preset VR_{2004} to the threshold point where the S-meter just begins to deflect with no signal input at the ANT jack.
2. Connect the signal generator to the ANT jack, and set for an output level of 10 dBμ at the transceiver frequency. Adjust VR_{2001} for S-1 deflection on the S-meter.

I. RF AGC

1. With the same signal generator setup as in the preceding step (H.2), connect the DC voltmeter (impedance > 1 Megohm) to TP_{2005}.
2. Set the signal generator output level to 70 dBμ, and adjust VR_{2003} to the threshold point where the DC voltmeter indication just begins to fall.

J. S-Meter Sensitivity

1. With the same signal generator set up as in step H.2 above, set the generator output to 80 dBμ and adjust VR_{2005} so that the S-meter deflects to the full scale mark (S9+40 dB).
2. Repeat procedures H and J several times.

K. DISC Meter Calibration

1. With the transceiver set to FM and no connections to the ANT jack, adjust VR_{2008} so that Meter I deflects exactly to the center of the scale.
2. Switch the Marker ON, and adjust VR_{2007} so that when the transceiver is tuned up and down slightly, the meter deflects to both edges of the scale. Switch the Marker OFF.
3. Repeat steps 1 and 2 several times.

AF UNIT

A. BFO/Width Mixer

With the WIDTH and SHIFT controls centered, connect the RF voltmeter to TP_{3001} and adjust T_{3003} for maximum RF voltage (nom. 700 mVrms).

B. RX Carrier Balance

With the transceiver set to USB and the Marker ON, tune for about a 1 kHz beat. Connect the AF voltmeter across the speaker terminals, and adjust VR_{3005} for maximum AF voltage.

POWER SUPPLY

The Power Supply should not require adjustment except in the event of failure of one of the components affecting voltage regulation.

24V potentiometer VR_{201} is located on the 24V AVR Unit at the inside bottom front of the Power Supply Unit, and is accessible through the hole in the front of the Power Supply Unit enclosure when removed from the FT-980 Main Chassis.

13.5V potentiometer VR_{301} is located on the 13.5V AVR Unit at the inside bottom rear of the Power Supply Unit, and is accessible through the hole in the grill at the bottom rear of the Power Supply Unit, without removal from the Main Chassis.

1. To adjust the 24V regulator, refer to Exploded View 2 on page 99, and remove the six screws affixing the heatsink cover, and the cover. Then remove the four screws between the fins of the Power Supply heatsink affixing the Unit in the Main Chassis, and remove the Unit, leaving the wiring connected.

   Connect the DC voltmeter to the 24V bus, and adjust VR_{201} for 24V DC during reception.
2. To adjust the 13.5V regulator, connect the DC voltmeter to the 13.5V bus and adjust VR_{301} for 13.5V during reception.

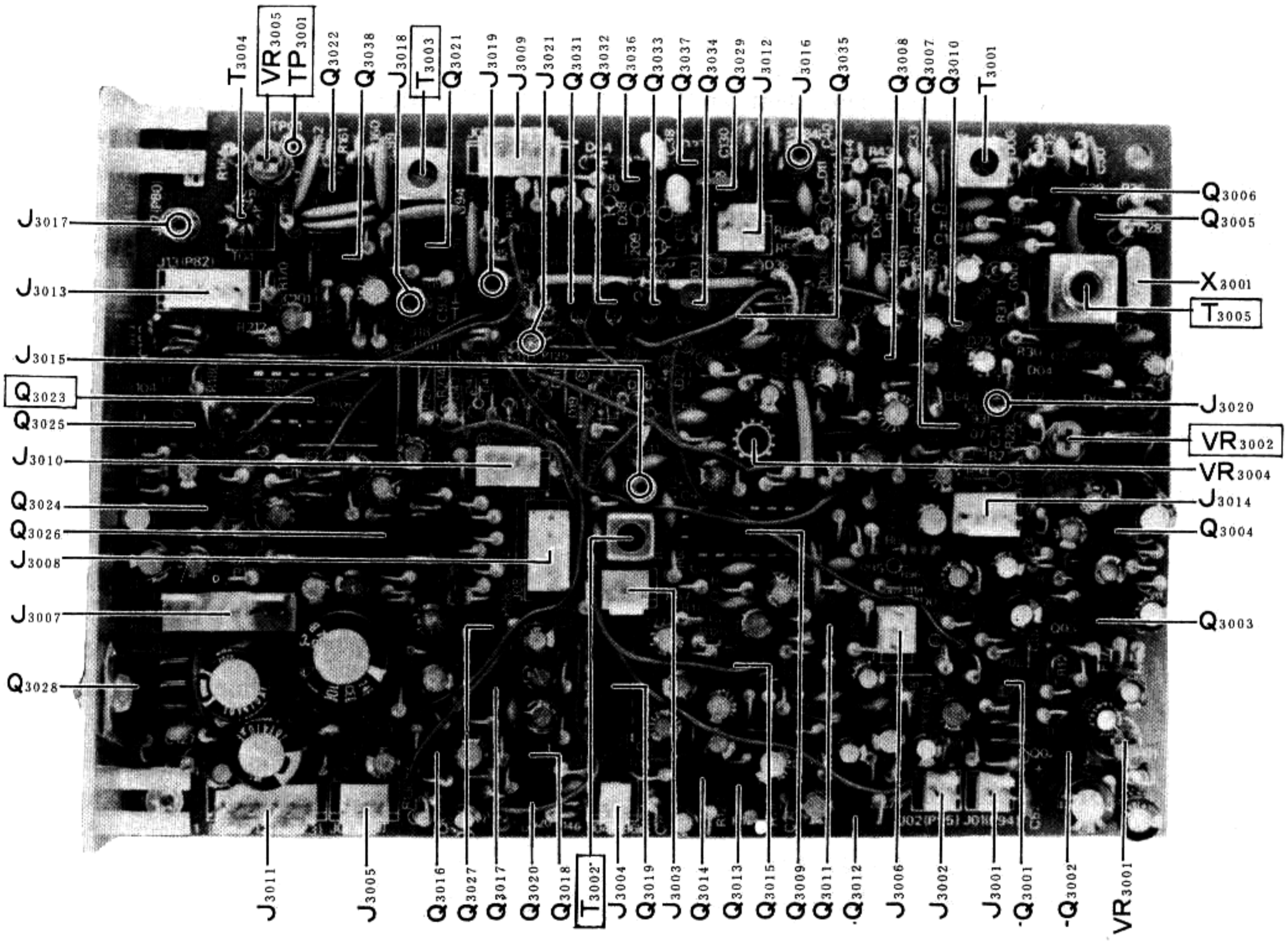

AF UNIT

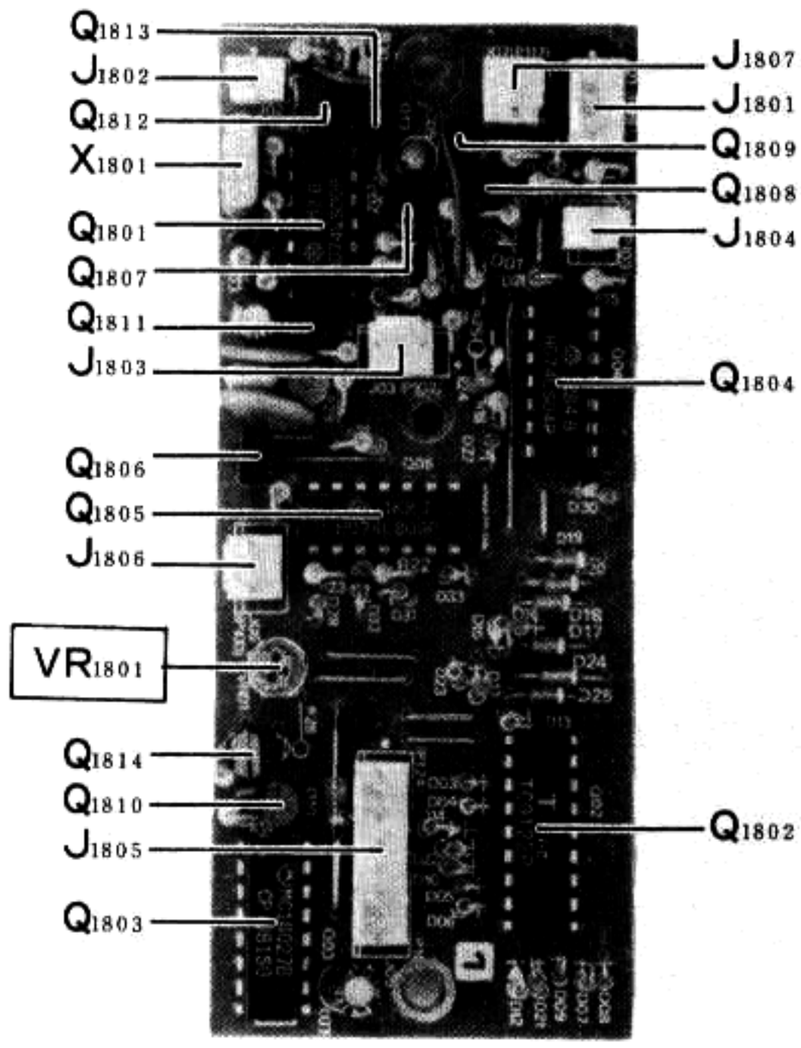

FSK UNIT

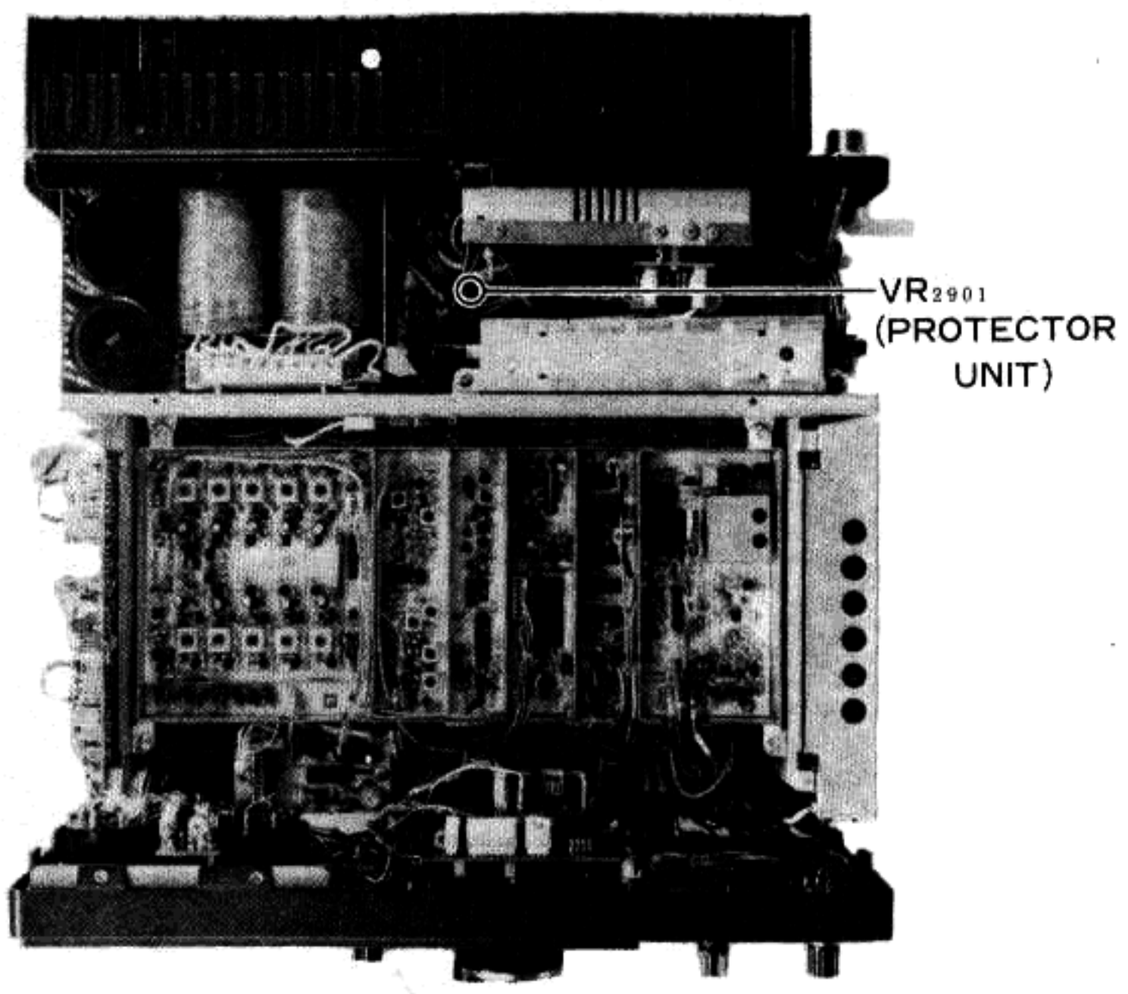

TOP VIEW

TRANSMITTER

The following procedures are interdependent, and may require that previous procedures be performed before, or again after each. Therefore, the entire transmitter section should be performed from beginning to end if one adjustment is required. All frequency measurements are to be made with the transceiver set to the HAM VFO. Except where specifically stated otherwise, the 50-ohm dummy load must be connected to the ANT jack for every step.

A. TX IF Transformers

1. Preset the FSK output level adjustment VR_{1801} on the FSK Unit fully clockwise. Disconnect P_{65} from J_{1003} on the RF Unit, and connect a 50-ohm resistive load along with the RF voltmeter across RF OUT jack J_{17} on the rear panel.
2. Preset the DRIVE control and VR_{1004} on the RF Unit fully clockwise, and preset VR_{1002} and VR_{1003} (RF Unit) and VR_{2901} (Protector Unit) fully counterclockwise. Tune the transceiver to 14 MHz, FSK mode.
3. Close the PTT line and adjust T_{3002} (AF Unit) for maximum RF voltage on the meter. Then adjust T_{2015}, T_{2018} and T_{2020} (IF Unit); and T_{1031} and T_{1032} (RF Unit), also for maximum RF voltage on the meter.

B. Carrier Balance

Set the transceiver to LSB, and the MIC GAIN control fully counterclockwise. With the same connections as above, adjust VR_{3004} (AF Unit) for minimum RF voltage on the meter.

C. ALC Level

1. Reconnect P_{65} to J_{1003} (RF Unit), and connect the wattmeter along with the dummy load to the ANT jack. With the DRIVE control and VR_{1004} (RF Unit) preset fully clockwise, also set VR_{1003} fully clockwise. VR_{2901} on the Protector Unit must remain fully counterclockwise.
2. With the transceiver tuned to 14 MHz, FSK mode, close the PTT line and adjust VR_{1003} (RF Unit) for 70W on the wattmeter.
3. Repeat step 2 with the transceiver tuned to 28 MHz, adjusting VR_{1002} for 100W on the wattmeter.

D. Protector Current Limiter

Tune the transceiver to 1.9 MHz. With the DRIVE control still fully clockwise, close the PTT line and adjust VR_{2901} (Protector Unit) for 100W on the wattmeter.

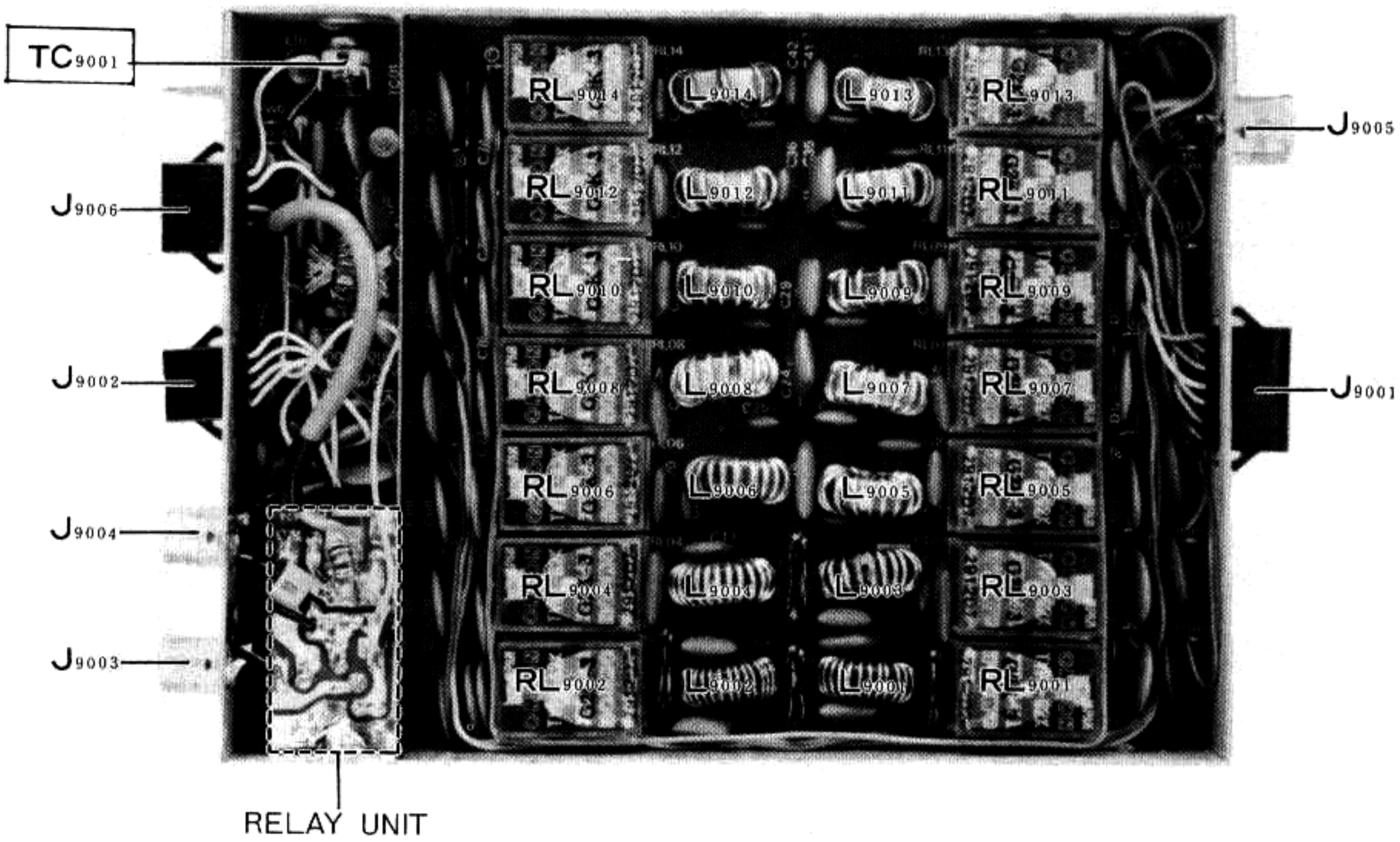

LPF UNIT

E. CM Coupler Balance

1. Connect the DC voltmeter to pin 1 of J_{1007} (RF Unit), and with the same setup as above, close the PTT line and adjust TC_{9001} (Relay Unit) for maximum DC voltmeter indication.
2. Repeat steps C.2 and C.3 in the ALC Level procedure above.

F. Reverse ALC Level

With the transceiver set to 14 MHz, FSK, connect a 17-ohm dummy load (three 50-ohm loads in parallel) with the in-line wattmeter to the ANT jack. Close the PTT line and adjust VR_{1004} (RF Unit) for 80W output.

G. ALC Meter Sensitivity

1. Remove the previous connections to the ANT jack, and reconnect the wattmeter and 50-ohm load. Set the transceiver to 14 MHz, USB, and the ALC METER switch to NORMAL. Set the MIC GAIN control to midrange, and connect the AF generator to the MIC jack. Set the generator output for 1 kHz, at the level that is just sufficient to cause the ALC meter to begin to deflect, and then increase the generator output exactly 10 dB.
2. Adjust VR_{1001} (RF Unit) so that the ALC meter indicates to the right edge of the ALC zone (corresponding with the S-9+10dB mark on the S-Unit scale).

H. FSK Output Level

Switch to the FSK mode, and with the DRIVE control fully clockwise, close the PTT line and adjust VR_{1801} (FSK Unit) for the same ALC meter indication as in the preceding step.

I. AM Modulation

1. Switch to the AM mode, and connect the monitor scope to the ANT jack with the dummy load and wattmeter. Close the PTT line and adjust the DRIVE control for 25W output.
2. Adjust the 1 kHz output of the AF generator to 1.5 mVrms, and set the MIC GAIN control fully clockwise.
3. Connect the DC voltmeter to pin 5 of J_{1009} (RF Unit), and adjust VR_{1005} for 4.0V DC.
4. Increase the AF generator level to 10 mV, and check the output waveform for undistorted modulation. Then reduce the generator level until the monitor scope indicates 60% modulation, and check that the generator signal applied to the MIC jack is less than 2 mV.

J. Speech Processor

1. With the transceiver set to 14 MHz, USB, set the DRIVE control fully clockwise, and the COMP control to midrange.
2. Set the AF generator for 1 mV output (at 1 kHz), and slightly adjust the COMP control to the threshold point just before the ALC meter begins to deflect.
3. Adjust T_{2017} (IF Unit) for maximum power output on the wattmeter, and the set the COMP control so that the COMP meter indicates 1 dB. Adjust T_{2016} for maximum deflection on the COMP meter.

K. FM Modulator

1. Install the RF sampling coupler in the line between the ANT jack and dummy load, and connect the deviation meter to the sampling port. Couple the frequency counter to the RF OUT terminal on the rear panel, and set the transceiver to 28 MHz, FM mode.
2. Adjust T_{3005} (AF Unit) to obtain the same frequency on the display as that on the counter.
3. Preset VR_{3002} fully clockwise, and with the AF generator set for 1 mVrms at 1 kHz to the MIC jack, adjust VR_{3001} for ±3.5 kHz deviation.
4. Increase the generator output to 10 mVrms, and adjust VR_{3002} for ±5 kHz deviation.

L. PO Meter Calibration

Adjust the DRIVE control for 100W output on the external wattmeter, and adjust VR_{11} for the same indication on Meter I (make sure the dummy load is 50 ohms).

M. IC and VCC Meter Calibration

1. Connect the ammeter in series with the high-current line to the PA Unit, and adjust VR_{1902} (REG Unit) so that the indication on Meter I matches the ammeter.
2. Connect the DC voltmeter between the high-current line to the PA Unit and ground, and adjust VR_{3601} on the Monitor Unit to match the VCC indication on Meter I with the voltmeter.

N. Final Amplifier Bias

Replace the ammeter in the high-current line to the PA Unit with the milliammeter, and without keying the transmitter, adjust VR_{8001} (PA Unit) for 200 mA.

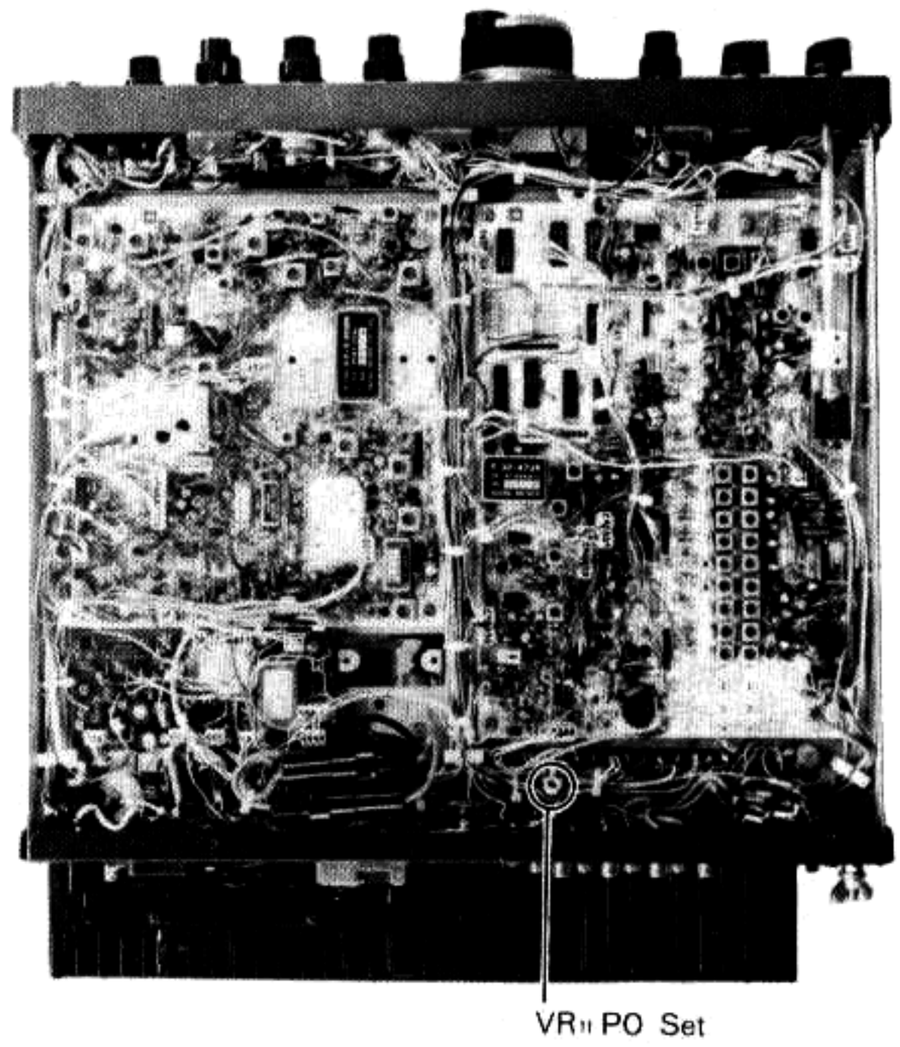

TOP VIEW

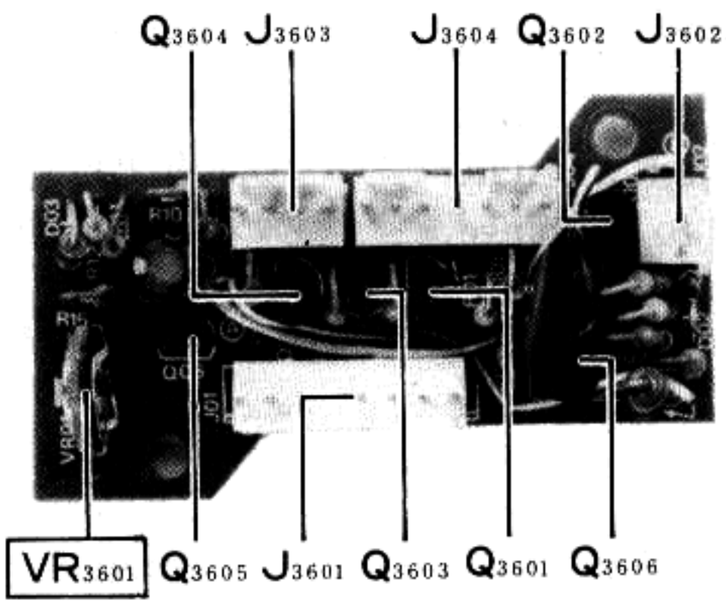

MONITOR UNIT

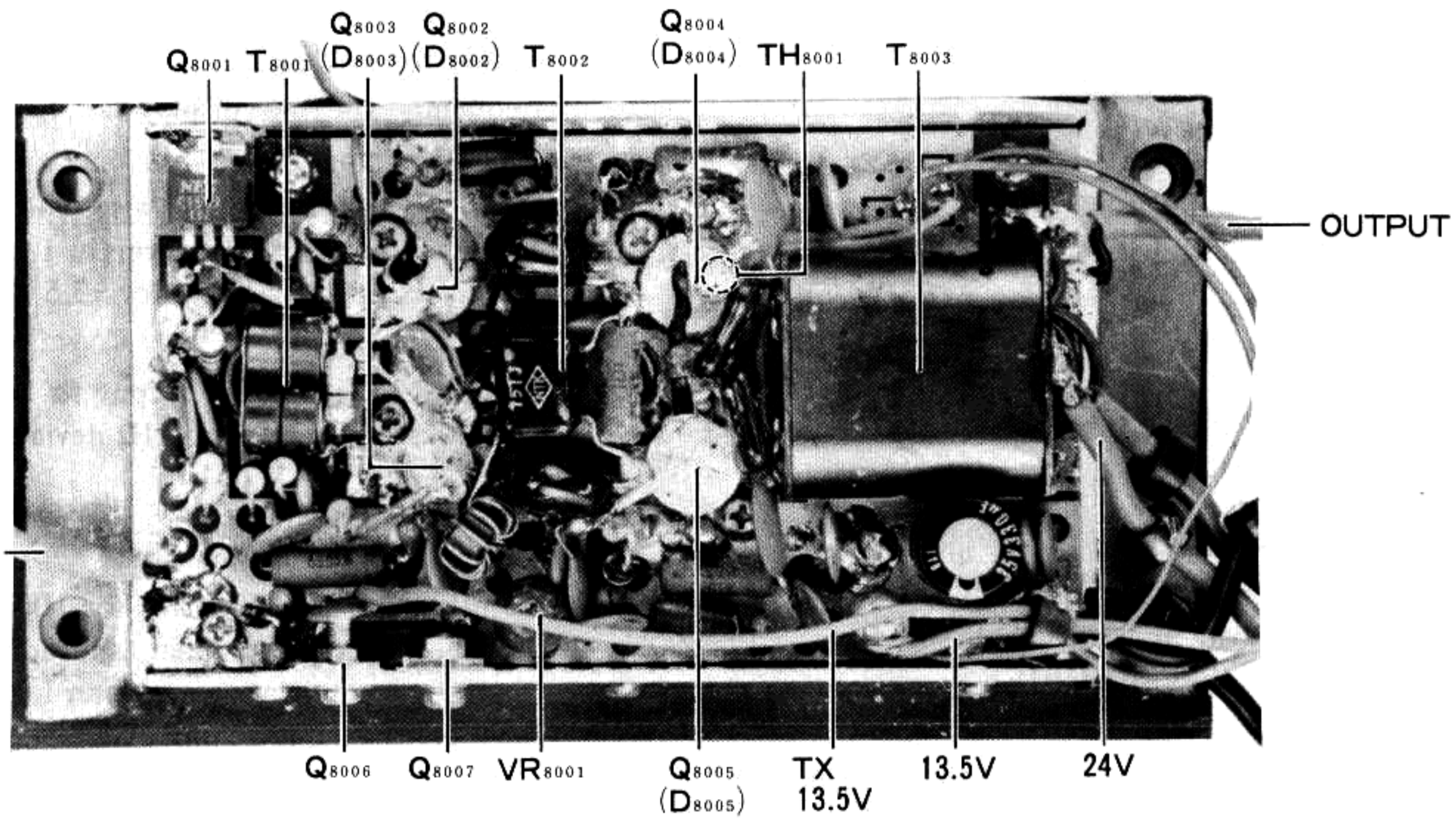

PA UNIT

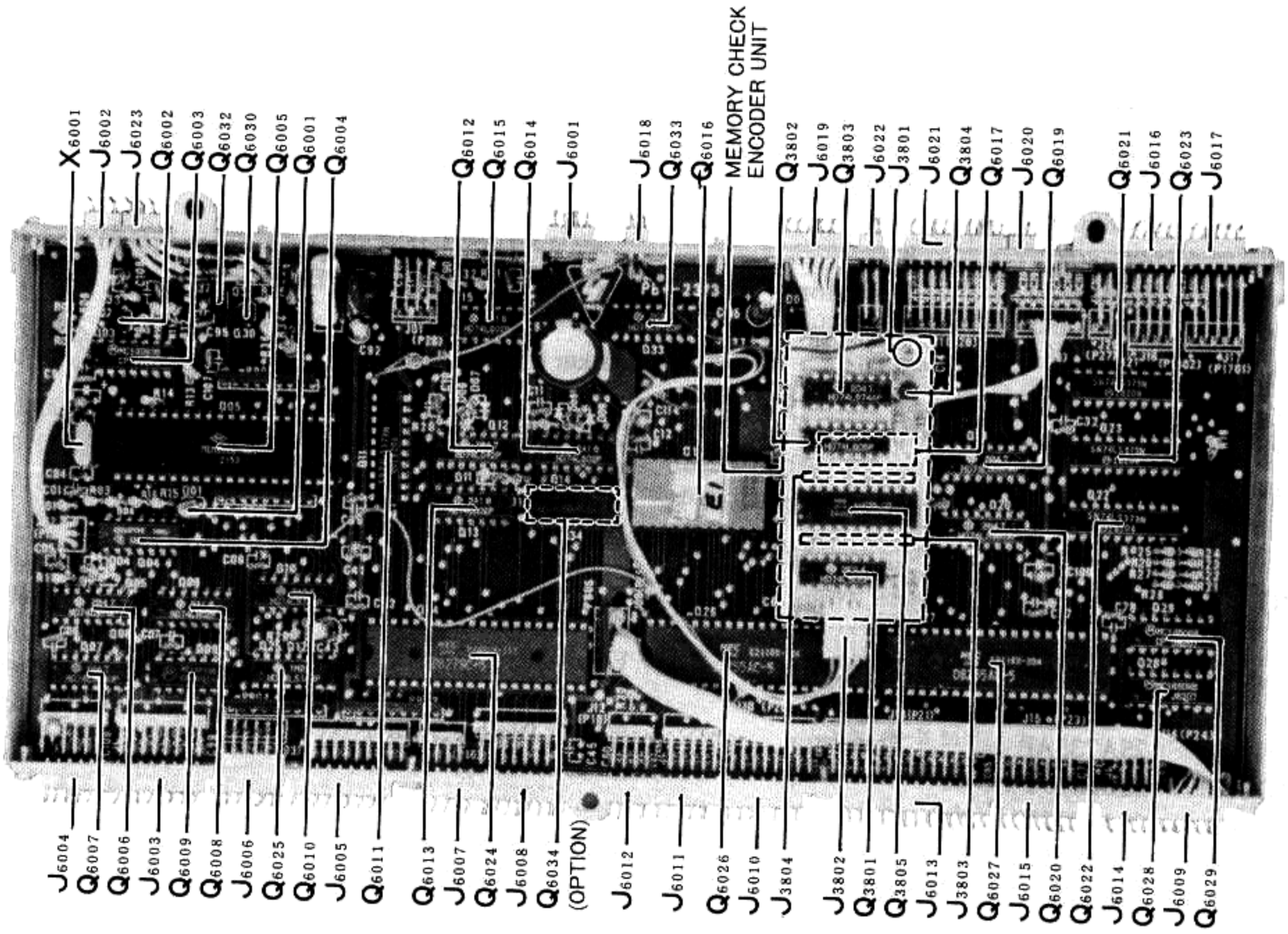

CPU UNIT

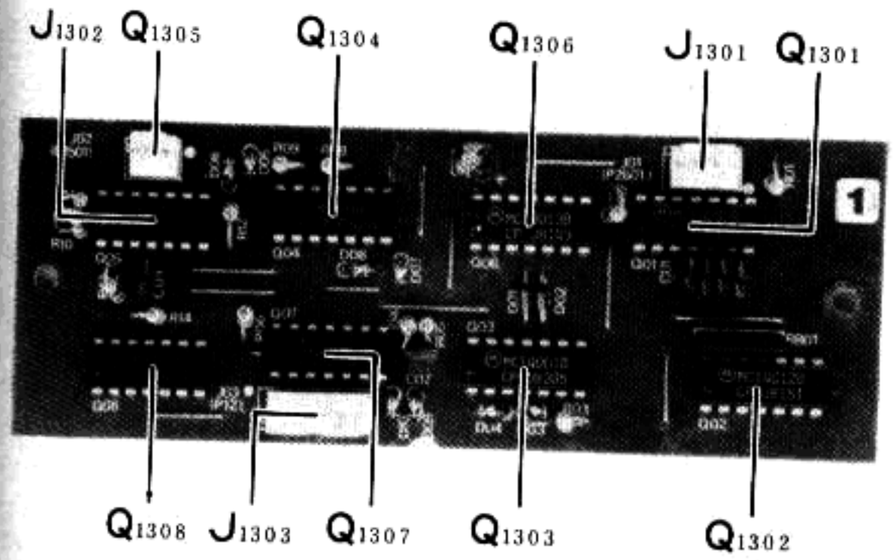

DIAL UNIT

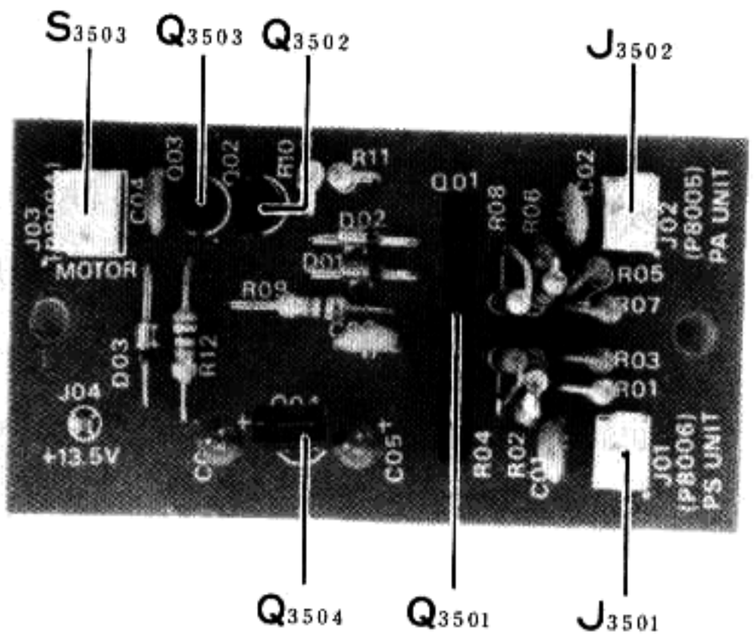

CONTROL UNIT

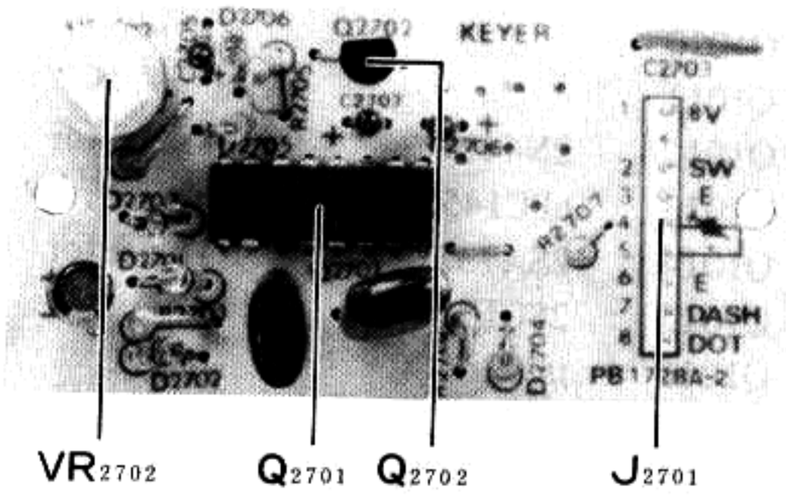

KEYER UNIT (OPTION)

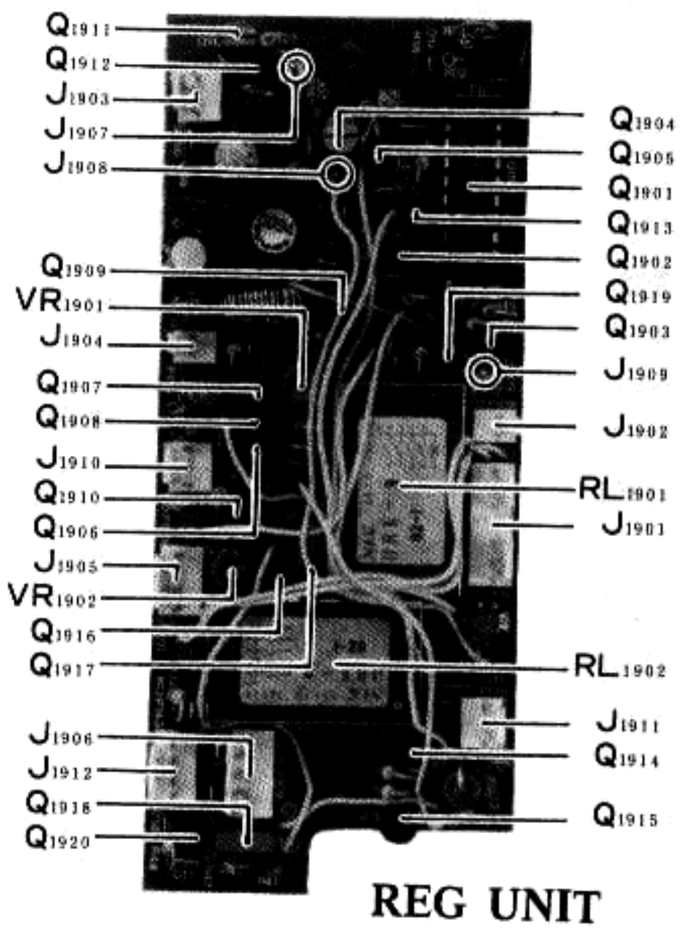

REG UNIT

COMPONENT APPLICATIONS

MAIN CHASSIS

Part No.	Device	Type	Function
Q1	2SA1012Y	Transistor	Regulator (+9V Line)
Q2	2SC880O	"	" (Display Unit +9V Line)
Q3	μPC7808	IC	" (for Meter Lamp)
Q4	2SB856	Transistor	" (CPU Unit +5V Line)
D1	1SS53	Si Diode	Marker Control Switch
D2	"	"	"
D3	"	"	CW Full Break-in Switch
D4	"	"	Back Pulse Cancelling

RF UNIT

Part No.	Device	Type	Function
Q1001	2SA733AP	Transistor	TX PA Disable Switch
Q1002	2SC1815Y	"	"
Q1003	2SA1012Y	"	"
Q1004	2SC1815GR	"	TX PO Meter Amplifier
Q1005	2SK125	JFET	RX RF Amplifier (GEN)
Q1006	"	"	" (")
Q1007	"	"	" (HAM)
Q1008	"	"	" (")
Q1009	"	"	RX 1st Mixer
Q1010	"	"	"
Q1011	"	"	RX Post Amplifier
Q1012	2N4427	Transistor	RX 1st Local (TX 2nd Local) Amplifier
Q1013	μPC1458C	IC	TX ALC Meter Amplifier
Q1014	2SA733AP	Transistor	TX Power Controller (AM, 10m)
Q1015	2SC1815GR	"	TX AM ALC Amplifier
Q1016	μPC1458C	IC	TX ALC Amplifier
Q1017	2SC1815GR	Transistor	"
Q1018	3SK73GR	MOS FET	TX 1st IF Amplifier
Q1019	ND487C2-3R	IC (Ring Module)	TX 2nd Mixer
Q1020	2SK125	JFET	TX RF Amplifier
Q1021	2N4427	Transistor	TX Predriver Amplifier
Q1022	2SC1959Y	"	TX Predriver (Q1021) Bias Switch
Q1023	2SC1815Y	"	KEY Switch
Q1024	"	"	TX Unlock Switch
Q1025	2SA733AP	"	"
Q1026	"	"	TX RF Amplifier (Q1020) Bias Switch
Q1027	"	"	Relay Driver [GEN/HAM Relay (RL1001)]
Q1028	μPA2004C	IC	Driver Array (for GEN/HAM Relay, GEN BPF Selector)
Q1029	"	"	" (HAM BPF Selector)
Q1030	"	"	" (")
Q1031	"	"	" [LPF Relay (RL9001–9014) Driver]
Q1032	MC14028B	"	Decoder (Filter Selector)
Q1033	"	"	" (")
Q1034	MC14081B	"	AND Gate (")
Q1035	"	"	" (")
Q1036	μPC78L05	"	Regulator (for Filter Select Logic Circuit)

Q1037	2SK107-3	JFET	TX ALC Meter Peak Hold Controller
Q1038	μPC1458C	IC	TL ALC Meter Amplifier and TX ALC Meter Peak Hold Controller
Q1039	2SC1815Y	Transistor	TX ALC Meter Peak Hold Controller
Q1040	2SA733AP	"	TX DRIVE Level Controller (SSB, PROC. ON)
Q1041	2SC1815Y	"	TX Power Controller (AM, 10m BAND)
Q1042	"	"	TX PA Disable Switch
Q1043	AN6552	IC	TX FWD, REF Meter Amplifier

D1001	1SS53	Si Diode	Diode OR (for Transverter Control at ACC-1)
D1002	"	"	"
D1003	"	"	"
D1004	"	"	"
D1005	HZ5C-2	Zener Diode	Regulator [for TX PA Disable Switch (Q1001)]
D1006	1SS97	Schottky Barrier Di.	BPF Switch (GEN, 0.15–1 MHz)
D1007	"	"	" (")
D1008	"	"	" (GEN, 1–2 MHz)
D1009	"	"	" (")
D1010	"	"	" (GEN, 2–4 MHz)
D1011	"	"	" (")
D1012	"	"	" (GEN, 4–8 MHz)
D1013	"	"	" (")
D1014	"	"	" (GEN, 8–16 MHz)
D1015	"	"	" (")
D1016	"	"	" (GEN, 16–30 MHz)
D1017	"	"	" (")
D1018	1SS53	Si Diode	Diode OR (RX ON)
D1019	"	"	" (TX ON)
D1020	"	"	" (RX ON)
D1021	1SS55	"	" (TX ON)
D1022	1SS53	"	BPF Switch (HAM, 160m)
D1023	1SS97	Schottky Barrier Di.	" (")
D1024	1SS53	Si Diode	" (HAM, 80m)
D1025	1SS97	Schottky Barrier Di.	" (")
D1026	1SS53	Si Diode	" (HAM, 40m)
D1027	1SS97	Schottky Barrier Di.	" (")
D1028	1SS53	Si Diode	" (HAM, 30m)
D1029	1SS97	Schottky Barrier Di.	" (")
D1030	1SS53	Si Diode	" (HAM, 20m)
D1031	1SS97	Schottky Barrier Di.	" (")
D1032	1SS53	Si Diode	" (HAM, 17m)
D1033	1SS97	Schottky Barrier Di.	" (")
D1034	1SS53	Si Diode	" (HAM, 15m)
D1035	1SS97	Schottky Barrier Di.	" (")
D1036	1SS53	Si Diode	" (HAM, 12m)
D1037	1SS97	Schottky Barrier Di.	" (")
D1038	1SS53	Si Diode	" (HAM, 10m)
D1039	1SS97	Schottky Barrier Di.	" (")
D1040	1SS53	Si Diode	" (HAM, AUX)
D1041	1SS97	Schottky Barrier Di.	" (")
D1042	1SS53	Si Diode	" (")
D1043	1SS97	Schottky Barrier Di.	" (")
D1044	1SS53	Si Diode	" (")
D1045	1SS97	Schottky Barrier Di.	" (")
D1046	"	"	" (HAM, 160–17m)
D1047	"	"	" (HAM, 15–10m, AUX)
D1048	1SS53	Si Diode	GEN/HAM Selector (GEN)
D1049	"	"	" (HAM)

D1050	1SS53	Si Diode	T/R Switch (RX ON)
D1051	〃	〃	Reverse Voltage Protector (for Q1038)
D1052	HZ9C1	Zener Diode	TX ALC Clipper
D1053	Not Used		
D1054	HZ9C1	Zener Diode	TX REV ALC Clipper
D1055	1SS97	Schottky Barrier Di.	ALC Meter Peak Hold Switch
D1056	〃	〃	〃
D1057	1SS53	Si Diode	Switch (TX FWD ALC)
D1058	〃	〃	〃 (TX REV ALC)
D1059	MV103	Varistor Diode	Temperature Compensator (for TX ALC Amplifier Q1017)
D1060	Not Used		
D1061	1SS53	Si Diode	T/R Switch (TX ON)
D1062	〃	〃	TX RF Amplifier (Q1020) Bias Switch
D1063	〃	〃	TX Predriver Bias Switch (Q1022) Delay Control
D1064	〃	〃	Reverse Voltage Protector (for Q1027)
D1065	〃	〃	12m TX Disable Switch
D1066	〃	〃	17m TX Disable Switch
D1067	Not Used		
D1068	1SS53	Si Diode	Diode Matrix (Filter Select Data)
〵	〵	〵	〵
D1086	1SS53	Si Diode	Diode Matrix (Filter Selector Data)
D1087	〃	〃	TX Unlock Switch
D1088	〃	〃	
D1089	〃	〃	Switch (TX ALC 1 Line)
D1090	〃	〃	Compensation for Q1040
D1091	〃	〃	TX AM ALC Switch
D1092	〃	〃	Reverse Voltage Protector (for Q1043)
D1093	〃	〃	〃 (〃)
XF1001	XF-47JX	Crystal Filter	RX 1st IF Filter, TX 2nd IF Filter

IF UNIT

Part No.	Device	Type	Function
Q2001	2SK19TM-GR	JFET	RX 2nd Mixer
Q2002	〃	〃	〃
Q2003	2SC380Y	Transistor	RX NB Buffer Amplifier
Q2004	3SK73GR	MOS FET	RX 3rd Mixer (SSB, AM, CW, FSK)
Q2005	〃	〃	RX 3rd IF Amplifier (〃)
Q2006	2SC1815Y	Transistor	RX Q Multiplier
Q2007	〃	〃	〃
Q2008	2SC1815BL	〃	RX 3rd IF Buffer Amplifier
Q2009	3SK73GR	MOS FET	RX 3rd IF Amplifier (SSB, AM, CW, FSK)
Q2010	2SC1815Y	Transistor	RX 3rd IF Buffer Amplifier (AM, 3rd IF AGC)
Q2011	〃	〃	〃
Q2012	2SC1815GR	〃	RX 3rd IF AGC Controller
Q2013	2SC1815Y	〃	RX 3rd IF Buffer Amplifier (RF AGC)
Q2014	〃	〃	RX RF AGC Controller
Q2015	μPC1458C	IC	RX S-Meter Amplifier
Q2016	3SK73GR	MOS FET	RX 3rd Mixer (for FM)
Q2017	2SC1815Y	Transistor	RX 3rd IF Amplifier (〃)
Q2018	μPC577H	IC	〃 (〃)

Q2019	2SC1815Y	Transistor	RX AF Amplifier (FM)
Q2020	"	"	RX FM SQL Amplifier
Q2021	"	"	"
Q2022	"	"	RX FM SQL Switch
Q2023	AN6551	IC	RX FM Center Meter DC Amplifier and RX WIDTH Controller (for EXT Control)
Q2024	2SC1583G	Transistor	RX NB Amplifier
Q2025	"	"	"
Q2026	2SC380Y	"	"
Q2027	2SC1815Y	"	RX NB AGC Amplifier
Q2028	2SC1815GR	"	RX NB Switch
Q2029	2SC380Y	"	RX WIDTH VCXO
Q2030	"	"	RX WIDTH Buffer Amplifier
Q2031	2SC1959Y	"	"
Q2032	2SC1923R	"	RX 2nd Local (TX 1st Local) Amplifier
Q2033	2SC1815GR	"	TX AMGC Switch
Q2034	2SB774	"	"
Q2035	2SC1815GR	"	"
Q2036	2SK125	JFET	TX AMGC Controller
Q2037	2SC380Y	Transistor	TX 1st IF Amplifier (for COMP Meter)
Q2038	2SC1815GR	"	TX COMP Meter DC Amplifier
Q2039	TA7302P	IC	TX 1st IF Limiter Amplifier (PROC ON)
Q2040	2SA733AP	Transistor	TX 1st IF Filter Switch (SSB Mode)
Q2041	3SK73GR	MOS FET	TX 1st Mixer
Q2042	"	"	"
Q2043	2SC1815GR	Transistor	WIDTH Controller Select Relay (RL2001) Driver
Q2044	Not Used		
Q2045	2SA733AP	Transistor	TX PROC ON/OFF Switch (PROC ON)
Q2046	"	"	" (PROC OFF)

D2001	1SS53	Si Diode	T/R Switch (RX 1st IF ON)
D2002	1SS97	Schottky Barrier Di.	RX NB Gate
D2003	"	"	"
D2004	1SS53	Si Diode	RX 3rd IF Filter Switch (AM-W)
D2005	"	"	" (SSB, FSK, AM-N, CW)
D2006	"	"	" (CW-N)
D2007	"	"	" (AM-W)
D2008	"	"	" (SSB, FSK, AM-N, CW)
D2009	"	"	" (CW-N)
D2010	"	"	Filter Selector (SSB)
D2011	"	"	" (CW-W)
D2012	"	"	" (AM-N)
D2013	1SV55	Varactor Diode	RX NOTCH Filter Rejection Frequency Controller
D2014	1SS16	Schottky Barrier Di.	Threshold Level Compensator (for AM Detector)
D2015	1N60	Ge Diode	RX AM Detector
D2016	"	"	RX 3rd IF AGC Detector
D2017	"	"	"
D2018	1N270	"	RX RF AGC Detector
D2019	"	"	"
D2020	1SS53	Si Diode	Reverse Voltage Protector (for Q2015)
D2021	1N60	Ge Diode	RX FM Discriminator
D2022	"	"	"
D2023	"	"	RX FM Noise Detector
D2024	1SS53	Si Diode	Threshold Level Compensator (for RX FM Noise Detector)
D2025	1S188FM	Ge Diode	RX FM Noise Detector
D2026	1SS53	Si Diode	Reverse Voltage Protector (for Q2023)
D2027	1N60	Ge Diode	RX NB Detector
D2028	"	"	"

D2029	1S1555	Si Diode	RX NB Switch
D2030	1SV50	Varactor Diode	RX WIDTH VCXO
D2031	1N60	Ge Diode	TX AMGC Detector
D2032	〃	〃	〃
D2033	1SS53	Si Diode	Switch (RX 9V for AMGC)
D2034	1N60	Ge Diode	TX COMP Meter Detector
D2035	〃	〃	〃
D2036	1SS53	Si Diode	Logarithmic Compensator (for COMP Meter)
D2037	〃	〃	PROC Switch (PROC ON)
D2038	〃	〃	〃 (PROC OFF)
D2039	〃	〃	〃 (〃)
D2040	〃	〃	〃 (PROC ON)
D2041	〃	〃	T/R Switch (RX 3rd IF ON)
D2042	〃	〃	Filter Selector (CW-W)
D2043	〃	〃	〃 (CW-N)
D2044	〃	〃	〃 (AM-W)
D2045	〃	〃	〃 (AM-N)
D2046	1SS97	Schottky Barrier Di.	RX 2nd Filter Switch (AM)
D2047	〃	〃	〃 (SSB, FSK, CW)
D2048	〃	〃	〃 (CW-W)
D2049	〃	〃	〃 (AM)
D2050	〃	〃	〃 (SSB, FSK, CW)
D2051	〃	〃	〃 (CW-W)
D2052	1SS53	Si Diode	T/R Switch (RX 2nd IF ON)
D2053	〃	〃	TX 1st IF Filter Switch (SSB)
D2054	〃	〃	〃 (〃)
D2055	〃	〃	〃 (〃)
D2056	〃	〃	T/R Switch (TX 2nd IF ON)
D2057	〃	〃	〃 (TX ON for CW, AM, FM)
D2058	〃	〃	〃 (〃 〃 〃)
D2059	〃	〃	Reverse Voltage Protector (for Q2043)
D2060	FC63	Varactor Diode	RX NB Gate
D2061	1SS53	Si Diode	Diode OR (RX 9V for FM)
D2062	〃	〃	Threshold Level Compensator (for TX COMP Meter DC
D2063	〃	〃	Filter Selector (SSB) Amplifier Q1038)
D2064	〃	〃	〃 (CW-N)
D2065	〃	〃	RX FM 3rd Mixer (Q2016) Disable Switch (SSB, FSK, CW, AM)
D2066	1N270	Ge Diode	RX RF AGC Detector
D2067	1SS53	Si Diode	Diode OR (FM 9V for FM)
D2068	Not Used		
D2069	〃		
D2070	HZ7A2	Zener Diode	Regulator (TX 1st IF Switching Stabilizer)
D2071	1SS53	Si Diode	Reverse Voltage Protector (for Q2046)
X2001	8532.5kHz	Crystal (HC-18/U)	RX WIDTH VCXO
TH2001	SDT-250	Thermistor	Temperature Compensator (for RX FM SQL Switch)
XF2001	8.9M20A	Crystal Filter	RX 2nd IF Filter
XF2002	XF-455.8MCN	〃	RX 3rd IF Filter (CW-N; OPTION)
XF2003	XF-8.9LP	〃	TX SSB Filter
XF2004	XF-8.9GA	〃	RX 2nd IF Filter (AM; OPTION)
XF2005	XF-8.9HSM	〃	RX 2nd (TX 1st) IF Filter (SSB, FSK, CW)
XF2006	XF-8.9HC	〃	RX 2nd IF Filter (CW-W; OPTION)

CF2001	CFM-455H	Ceramic Filter	RX 3rd IF Filter (AM-W)
CF2002	CFM-455J1	"	" (SSB, CW, FSK, AM-N)
CF2003	CFW-455E	"	" (FM)
CF2004	LFB-15	"	(")
CD2001	SFD-455S4	Ceramic Filter	RX FM Discriminator

AF UNIT

Part No.	Device	Type	Function
Q3001	2SC732GR	Transistor	TX MIC Amplifier
Q3002	2SC945AP	"	" (FM)
Q3003	"	"	(")
Q3004	"	"	(")
Q3005	"	"	TX FM Carrier VCXO
Q3006	"	"	TX FM IF Amplifier
Q3007	"	"	TX MIC Amplifier (SSB, AM)
Q3008	"	"	" (SSB, AM, FSK)
Q3009	MC1496P	IC	TX Balanced Modulator (SSB, CW, AM, FSK)
Q3010	2SK107-3	JFET	TX AM ALC Amplifier
Q3011	2SC945AP	Transistor	TX VOX Amplifier
Q3012	"	"	"
Q3013	2SC1815GR	"	TX VOX Compensator
Q3014	"	"	"
Q3015	2SC945AP	"	TX AMGC Amplifier
Q3016	"	"	TX ANTI-TRIP Amplifier
Q3017	2SC1815GR	"	"
Q3018	2SA564AR	"	TX ANTI-TRIP Switch
Q3019	MC14011B	IC	TX VOX Gate
Q3020	2SC1815GR	Transistor	TX VOX Switch
Q3021	3SK73GR	MOS FET	RX Carrier Premixer
Q3022	2SC1815Y	Transistor	RX Carrier Buffer Amplifier
Q3023	MC14066B	IC	AF Mode Switch
Q3024	2SC945AP	Transistor	RX AF Preamplifier
Q3025	"	"	RX AF Active LPF
Q3026	AN6551	IC	RX AF APF, CW Sidetone Filter
Q3027	2SC945AP	Transistor	RX AF Buffer Amplifier (for AF OUT)
Q3028	μPC2002V	IC	RX Audio Amplifier
Q3029	μPC78L05	"	Regulator (FSK Circuit)
Q3030	Not Used		
Q3031	2SA733AP	Transistor	MODE Switch (SSB)
Q3032	2SA950Y	"	" (CW)
Q3033	2SA733AP	"	" (AM)
Q3034	"	"	" (FSK)
Q3035	2SA950Y	"	" (FM)
Q3036	2SB774	"	" (TX FM)
Q3037	NJM78L09A	IC	Regulator (TX FM Carrier VCXO)
Q3038	ND487R1-3R	IC (Ring Module)	RX Balanced Demodulator
D3001	1SS53	Si Diode	TX MIC Amplifier (Q3001) Disable Switch (FSK)
D3002	1S188FM	Ge Diode	TX FM IDC
D3003	"	"	"
D3004	FC53M-5	Varactor Diode	TX FM Modulator
D3005	MV103	Varistor Diode	Temperature Compensator [TX FM Modulator (D3005) Bias]
D3006	1SS53	Si Diode	TX FM Limiter
D3007	"	"	"

D3008	1SS53	Si Diode	MODE Switch (AM, CW TX IF OUT)
D3009	"	"	" (TX FM IF)
D3010	"	"	T/R Switch (TX CW, AM, FM IF OUT)
D3011	"	"	" (" " ")
D3012	"	"	TX MIC Amplifier (Q3007) Disable Switch (CW, FM)
D3013	"	"	TX MIC Amplifier (Q3008) Disable Switch (CW, FM)
D3014	"	"	MODE Switch (SSB, FSK TX IF OUT)
D3015	"	"	" (TX Bal Mod out for CW, AM)
D3016	"	"	Diode OR (TX Bal Mod out CW)
D3017	"	"	" (" " " " AM)
D3018	"	"	TX Balanced Modulator (Q3009) Carrier Balance Control Switch (AM)
D3019	"	"	TX Balanced Modulator (Q3009) Carrier Balance Control Switch (CW)
D3020	"	"	Diode OR (MIC Amplifier Disable on CW)
D3021	"	"	" (" " " FM)
D3022	"	"	TX AM ALC Impedance Isolator
D3023	"	"	TX VOX Amplifier (Q3011) Disable Switch (CW)
D3024	"	"	TX ANTI-TRIP Amplifier (Q3016) Disable Switch (CW)
D3025	1N270	Ge Diode	TX ANTI-TRIP Clamp
D3026	1SS53	Si Diode	TX ANTI-TRIP Control Switch (FSK)
D3027	"	"	" (FM)
D3028	HZ5C1	Zener Diode	Regulator [for TX FM Modulator (D3004) Bias]
D3029	1N270	Ge Diode	TX VOX Clamp
D3030	1SS53	Si Diode	RX Carrier Premixer (Q3021) Disable Switch (AM)
D3031	HZ5C1	Zener Diode	TX VOX AMP Clipper
D3032	1SS53	Si Diode	RX Carrier Premixer (Q3021) Disable Switch (FM)
D3033	Not Used		
D3034	"		
D3035	1SS53	Si Diode	TX BFO Switch (Input to Q3009)
D3036	"	"	Diode OR (CW, FSK +9V Line, from CW 9V)
D3037	"	"	" (" , from TX FSK 9V)
D3038	Not Used		
D3039	1SS53	Si Diode	Diode OR (TX FSK IF OUT)
D3040	"	"	" (TX SSB IF OUT)
D3041	"	"	" (FSK for SSB, CW, FSK 9V MODE Line)
D3042	"	"	" (CW " " " ")
D3043	"	"	" (SSB " " " ")
D3044	RD7.5EB1	Zener Diode	Regulator (FM TX 9V)
D3045	1SS53	Si Diode	Diode OR (FSK for FM 9V)
D3046	"	"	" (AM " ")
X3001	8.9875MHz	Crystal (HC-18/T3P)	TX FM Carrier VCXO

PLL UNIT

Part No.	Device	Type	Function
Q4001	MPS-A13	Transistor	PLL BFO Active LPF
Q4002	2SK19TM-GR	Junction FET	PLL BFO VCO
Q4003	2SC535A	Transistor	PLL BFO Buffer Amplifier
Q4004	NJM78L09A	IC	Regulator (PLL +9V Line)
Q4005	2SC535A	Transistor	PLL BFO Buffer Amplifier
Q4006	HD10551	IC	PLL BFO 1/10 Divider
Q4007	2SC535A	Transistor	BLL BFO Buffer Amplifier
Q4008	2SC1815GR	"	PLL Data Switch (for PLL BFO, P. DIV, ϕ DET)
Q4009	3SK73GR	MOS FET	PLL BFO Buffer Amplifier
Q4010	μPC7805H	IC	Regulator (PLL +5V Line)
Q4011	MB8718	"	PLL BFO, P. DIV, ϕ DET

Q4012	2SC380TM-Y	Transistor	PLL BFO IF Amplifier
Q4013	SN76514N	IC	PLL BFO Mixer
Q4014	MB8718	"	PLL (RX 1st, TX 2nd Local) P. DIV, ϕ DET
Q4015	MC14518B	"	PLL Reference 1/2, 1/10, 1/100 Divider
Q4016	MC14027B	"	RX Marker Switch, 1/2 Divider
Q4017	2SC380TM-Y	Transistor	RX Marker Buffer Amplifier
Q4018	SN74LS90N	IC	PLL Reference 1/10 Divider
Q4019	"	"	PLL Reference 1/3 Divider
Q4020	"	"	PLL Reference 1/10 Divider
Q4021	2SC380TM-Y	Transistor	PLL (RX 1st, TX 2nd Local) IF Buffer Amplifier
Q4022	HD10551	IC	PLL (RX 1st, TX 2nd Local) 1/10 Divider
Q4023	2SC380TM-Y	Transistor	PLL Reference 50 kHz Buffer Amplifier
Q4024	2SC1923R	"	PLL (RX 1st, TX 2nd Local) IF Amplifier
Q4025	2SC535C	"	PLL Reference 30 MHz Amplifier
Q4026	2SC380TM-Y	"	RX 2nd, TX 1st Local Oscillator
Q4027	"	"	RX 2nd, TX 1st Local Buffer Amplifier
Q4028	SN76514N	IC	PLL (RX 2nd, TX 1st Local) Mixer
Q4029	2SC1923R	Transistor	PLL (RX 2nd, TX 1st Local) IF Amplifier
Q4030	SN76514N	IC	PLL (RX 1st, TX 2nd Local) Mixer
Q4031	2SC1815GR	Transistor	PLL Unlock Switch
D4001	1SV55	Varactor Diode	PLL BFO VCO
D4002	1N60	Ge Diode	Clamp
D4003	1SS53	Si Diode	TX BFO Switch
X4001	38.0675MHz	Crystal (HC-18/U)	RX 2nd, TX 1st Local Oscillator
TH4001	31D26	Thermistor	Temperature Compensator (PLL BFO VCO)

VCO UNIT

Part No.	Device	Type	Function
Q5001	NJM78L09A	IC	Regulator (for VCO Circuit)
Q5002	2SA733AP	Transistor	RX 1st, TX 2nd Local VCO (Q5003) Switch
Q5003	2SK19TM-BL	JFET	RX 1st, TX 2nd Local VCO (47.055–49.055 MHz)
Q5004	"	"	" (49.055–52.055 MHz)
Q5005	2SA733AP	Transistor	RX 1st, TX 2nd Local VCO (Q5004) Switch
Q5006	"	"	RX 1st, TX 2nd Local VCO (Q5007) Switch
Q5007	2SK19TM-BL	JFET	RX 1st, TX 2nd Local VCO (52.055–55.055 MHz)
Q5008	"	"	" (55.055–58.055 MHz)
Q5009	2SA733AP	Transistor	RX 1st, TX 2nd Local VCO (Q5008) Switch
Q5010	"	"	RX 1st, TX 2nd Local VCO (Q5011) Switch
Q5011	2SK19TM-BL	JFET	RX 1st, TX 2nd Local VCO (58.055–61.055 MHz)
Q5012	"	"	" (61.055–64.055 MHz)
Q5013	2SA733AP	Transistor	RX 1st, TX 2nd Local VCO (Q5012) Switch
Q5014	"	"	RX 1st, TX 2nd Local VCO (Q5015) Switch
Q5015	2SK19TM-BL	JFET	RX 1st, TX 2nd Local VCO (64.055–67.055 MHz)
Q5016	"	"	" (67.055–70.055 MHz)
Q5017	2SA733AP	Transistor	RX 1st, TX 2nd Local VCO (Q5016) Switch
Q5018	"	"	RX 1st, TX 2nd Local VCO (Q5019) Switch
Q5019	2SK19TM-BL	JFET	RX 1st, TX 2nd Local VCO (70.055–73.055 MHz)
Q5020	"	"	" (73.055–77.055 MHz)
Q5021	2SA733AP	Transistor	RX 1st, TX 2nd Local VCO (Q5020) Switch
Q5022	3SK73GR	MOS FET	RX 1st, TX 2nd Local Buffer Amplifier
Q5023	"	"	"
Q5024	2SC1815GR	Transistor	RX 1st Local Disable Switch (GEN 26–30 MHz)
Q5025	SN74LS145N	IC	Decoder (for RX 1st, TX 2nd Local VCO Selector)

D5001	1SV55	Varactor Diode	RX 1st, TX 2nd Local VCO	(47.055–49.055 MHz)
D5002	1SS53	Si Diode	RX 1st, TX 2nd Local VCO	(Q5003) Switch
D5003	"	"	RX 1st, TX 2nd Local VCO	(Q5004) Switch
D5004	1SV55	Varactor Diode	RX 1st, TX 2nd Local VCO	(49.055–52.055 MHz)
D5005	"	"	"	(52.055–55.055 MHz)
D5006	1SS53	Si Diode	RX 1st, TX 2nd Local VCO	(Q5007) Switch
D5007	"	"	RX 1st, TX 2nd Local VCO	(Q5008) Switch
D5008	1SV55	Varactor Diode	RX 1st, TX 2nd Local VCO	(55.055–58.055 MHz)
D5009	"	"	"	(58.055–61.055 MHz)
D5010	1SS53	Si Diode	RX 1st, TX 2nd Local VCO	(Q5011) Switch
D5011	"	"	RX 1st, TX 2nd Local VCO	(Q5012) Switch
D5012	1SV55	Varactor Diode	RX 1st, TX 2nd Local VCO	(61.055–64.055 MHz)
D5013	"	"	"	(64.055–67.055 MHz)
D5014	1SS53	Si Diode	RX 1st, TX 2nd Locql VCO	(Q5015) Switch
D5015	"	"	RX 1st, TX 2nd Local VCO	(Q5016) Switch
D5016	1SV55	Varactor Diode	RX 1st, TX 2nd Local VCO	(67.055–70.055 MHz)
D5017	"	"	"	(70.055–73.055 MHz)
D5018	1SS53	Si Diode	RX 1st, TX 2nd Local VCO	(Q5019) Switch
D5019	"	"	RX 1st, TX 2nd Local VCO	(Q5020) Switch
D5020	1SV55	Varactor Diode	RX 1st, TX 2nd Local VCO	(73.055–77.055 MHz)
TH5001	D22A	Thermistor	Temperature Compensator (RX 1st, TX 2nd Local VCO)	

CPU UNIT

Part No.	Device	Type	Function
Q6001	2SC1815Y	Transistor	Buffer
Q6002	2SA733AP	"	RESET Switch
Q6003	MC14093B	IC	NAND Gate (CPU RESET Timing)
Q6004	SN74LS14	"	Inverter
Q6005	MSM80C85ARS	"	CPU
Q6006	SN74LS75	"	Latch (PLL Output Data)
Q6007	SN74LS190	"	Up/Down Counter (Frequency Control)
Q6008	SN74LS02	"	NOR Gate
Q6009	MC14016	"	Analog Switch (Frequency Control Data Input)
Q6010	SN74LS74	"	Flip-flop ($\overline{CK}$ INH, ST OUT)
Q6011	SN74LS373	"	Latch (Address Data)
Q6012	SN74LS42	"	Decoder (")
Q6013	SN74LS02	"	NOR Gate
Q6014	"	"	"
Q6015	"	"	"
Q6016	μPD2364C-0402	"	ROM
Q6017	μPD445LC-1	"	RAM
Q6018	Not Used		
Q6019	SN74LS365	IC	Bus Driver (TRS Input Data)
Q6020	"	"	" (")
Q6021	SN74LS373	"	Latch (TRS Data, FSK Shift Data)
Q6022	"	"	" (WIDTH Freq Data)
Q6023	"	"	" (")
Q6024	μPD8279C-5	"	Programmable Keypad, Display Controller (Key Input Data, Frequency Display DATA)
Q6025	SN74LS145	"	Decoder (Key Scan Line)
Q6026	μPD8255AC5	"	Programmable I/O Port (IF SHIFT/BAND/MODE Data)
Q6027	"	"	" (PLL Data, VCO Select Data)
Q6028	MC14504	"	Level Shifter (PLL Output Data)
Q6029	"	"	" (")

Q6030	2SA733AP	Transistor	Regulator (CPU Unit +5V Line)
Q6031	Not Used		
Q6032	μPC78L05	IC	Regulator (CPU Unit +5V Line)
Q6033	SN74LS123	"	Multivibrator (Buzzer Switching)
Q6034	TBP18SA030N	"	ROM (AUX Band Data)
D6001	10D1	Si Diode	Switch (System Backup)
D6002	1S1555	"	" (")
D6003	WZ071	Zener Diode	RESET Switch
D6004	1SS106	Schottky Barrier Di.	PD Data Output Disable Diode OR
D6005	"	"	" " " " "
D6006	1S1555	Si Diode	$\overline{CS}$ Diode OR
D6007	"	"	" " "
D6008	"	"	$\overline{CE1}$ Diode OR
D6009	"	"	" " "
D6010	"	"	PD Data Output Disable Switch
D6011	"	"	Status Data Output Enable
D6012	"	"	RESET Switch
X6001	6 MHz	Crystal (HC-18/U)	CPU Clock

MEMORY CHECK DECODER UNIT

Part No.	Device	Type	Function
Q2801	SN74LS05	IC	Inverter
Q2802	"	"	"
Q2803	SN74LS74	"	Latch (M. CHECK Data)
Q2804	2SC1815Y	Transistor	M. CHECK Data Reset Switch
Q2805	μPD445LC-1	IC	RAM
D2801	1SS97	Schottky Barrier Di.	A2 M CK Gate
D2802	"	"	A5 M CK Gate
D2803	"	"	A6 M CK Gate

VFO UNIT

Part No.	Device	Type	Function
Q7001	TC5081P	IC	PLL VCO-1 Phase Detector
Q7002	MPS-A13	Transistor	PLL VCO-1 Active LPF
Q7003	2SC535A	"	PLL VCO-1
Q7004	"	"	PLL VCO-1 Buffer Amplifier
Q7005	SN76514N	IC	PLL VCO-1 Mixer
Q7006	2SC535A	Transistor	PLL VCO-1 IF Amplifier
Q7007	TC9122A	IC	PLL VCO-1 Programmable Divider
Q7008	2SC535A	Transistor	PLL VCO-1 Buffer Amplifier
Q7009	HD10551P	IC	PLL VCO-1 1/10 Divider
Q7010	SN76514N	"	PLL Mixer
Q7011	2SC1815Y	Transistor	PLL IF Amplifier
Q7012	"	"	"
Q7013	SN74LS90	IC	PLL IF 1/10 Divider
Q7014	SN76514N	"	PLL Mixer
Q7015	2SC535A	Transistor	PLL IF Buffer Amplifier
Q7016	2SK19TM-GR	JFET	PLL VCO-2 Buffer Amplifier
Q7017	SN76514N	IC	PLL VCO-2 Mixer
Q7018	2SC535A	Transistor	PLL VCO-2 IF Amplifier
Q7019	TC9122A	IC	PLL VCO-2 Programmable Divider

Q7020	TC5081P	IC	PLL VCO-2 Phase Detector	
Q7021	2SC1815Y	Transistor	PLL LOCK Lamp Switch	
Q7022	MPS-A13	"	PLL VCO-2 Active LPF	
Q7023	2SK19TM-GR	JFET	PLL VCO-2	
Q7024	2SC535A	Transistor	PLL VCO-2 Buffer Amplifier	
Q7025	HD10551	IC	PLL VCO-2 1/10 Divider	
Q7026	2SD880Y	Transistor	Regulator (PLL Circuit)	
Q7027	μPC7808	IC	" (PLL +8V Line)	
Q7028	μPC7805	"	" (PLL +5V Line)	
Q7029	2SC1815Y	Transistor	PLL Reference Oscillator	
Q7030	"	"	PLL Reference Buffer Amplifier	
Q7031	2SC535A	"	PLL Reference Tripler	
Q7032	"	"	PLL Reference Buffer Amplifier	
Q7033	"	"	PLL Reference Doubler	
Q7034	2SC1815Y	"	PLL Reference Buffer Amplifier	
Q7035	2SC535A	"	PLL VCO-2 IF Buffer Amplifier	
Q7036	2SA733AP	"	PLL Reference 10 kHz Buffer Amplifier	
D7001	1S2209	Varactor Diode	PLL VCO-1	
D7002	1SV55	"	PLL VCO-2	
D7003	WZ100	Zener Diode	Regulator (PLL Circuit)	
X7001	30MHz	Crystal (HC-18/U)	PLL Reference Oscillator	
TH7001	31D26	Thermistor	Temperature Compensator (PLL VCO-2)	
TH7002	PTH507A01-BG330N020	Posistor	" (PLL Reference Oscillator)	

LPF UNIT

Part No.	Device	Type	Function	
D9001	1SS97	Schottky Barrier Di.	TX AM ALC Detector	
D9002	"	"	"	
D9003	"	"	TX FWD Detector	
D9004	"	"	TX REF Detector	
D9005	"	"	TX ALC Detector	
D9006	"	"	TX REV ALC Detector	
D9007	"	"	TX ALC Detector	
D9008	"	"	TX REV ALC Detector	
D9009	1S1555	Si Diode	Back Pulse Canceller	[for 12m, 10m LPF Relay (RL9013, 9014)]
D9010	"	"	Back Pulse Canceller	[for 17m, 15m LPF Relay (RL9011, 9012)]
D9011	"	"	"	[for 20m LPF Relay (RL9009, 9010)]
D9012	"	"	"	[for 30m LPF Relay (RL9007, 9008)]
D9013	"	"	"	[for 40m LPF Relay (RL9005, 9006)]
D9014	"	"	"	[for 80m LPF Relay (RL9003, 9004)]
D9015	"	"	"	[for 160m LPF Relay (RL9001, 9002)]
D9016	"	"	"	[for ANT Relay (RL9015)]

DIAL UNIT

Part No.	Device	Type	Function
Q1301	MC14093B	IC	NAND Schmitt Trigger

Q1302	MC14012B	IC	Dual 4-Input NAND Gate
Q1303	MC14001B	"	NOR Gate
Q1304	MC14584B	"	Schmitt Trigger
Q1305	MC14011B	"	NAND Gate Multivibrator
Q1306	MC14013B	"	"D" Type Flip-Flop
Q1307	SN74LS00	"	NAND Gate
Q1308	MC14016B	"	Analog Switch
D1301	1S1555	Si Diode	Diode OR
D1302	"	"	"
D1303	"	"	"
D1304	"	"	"
D1305	"	"	Trigger
D1306	"	"	"
D1307	"	"	Diode OR
D1308	"	"	"
D1309	"	"	"
D1310	"	"	"

DISPLAY UNIT (A)

Part No.	Device	Type	Function
V1401	FIP-9E8A	FCD	Frequency Display
V1402	FIP-9P5	"	Sub Dial Display
D1401	TLY205	LED	ATT Indicator
D1402	"	"	M. CHECK Indicator
D1403	"	"	EXT Indicator
D1404	"	"	SPLIT Indicator
D1405	"	"	MR Indicator
D1406	"	"	VFO Indicator

DISPLAY UNIT (B)

Part No.	Device	Type	Function
Q1601	TC5067BP	IC	FCD Driver (for MODE Display)
Q1602	MSL912RS	"	" (for Segment)
Q1603	"	"	" (for Digit)
Q1604	"	"	" (")
Q1605	SN7445	"	Decoder (MODE Display Data)
Q1606	MC14514B	"	" (Display Data)
Q1607	NJM78L05A	"	Regulator (for Display Unit)
Q1608	2SC2002L	Transistor	DC-DC Converter OSC
Q1609	2SC1815GR	"	Blanking sw (for MODE Display)
D1601	1S1554	Si Diode	Diode Matrix (for MODE Display)
D1602	"	"	" (")
D1603	"	"	" (")
D1604	"	"	" (")
D1605	Not Used		
〉	〉		
D1612	Not Used		
D1613	1S1554	Si Diode	Diode Matrix (for MODE Display)
〉	〉	〉	〉
D1624	1S1554	Si Diode	Diode Matrix (for MODE Display)

D1625	Not Used		
〜	〜		
D1632	Not Used		
D1633	1S1554	Si Diode	Rectifier (DC-DC Converter Vout)
D1634	1N270	Ge Diode	Timing (for MODE Display)

DISPLAY UNIT (C)

Part No.	Device	Type	Function
Q2701	SN74LS75P	IC	Latch (MODE Data)
Q2702	SN74LS145N	〃	Decoder (〃)
Q2703	2SA733AP	Transistor	Driver (for M. CHECK LED)
D2701	1S1554	Si Diode	Diode Matrix (for MODE Data)
〜	〜	〜	〜
D2716	1S1554	Si Diode	Diode Matrix (for MODE Data)

KEY MATRIX UNIT

Part No.	Device	Type	Function
D1701	TLY205	LED	M. SHIFT Indicator
D1702	〃	〃	CLAR RX Indicator
D1703	〃	〃	CLAR TX Indicator
D1704	〃	〃	TAB Indicator
D1705	〃	〃	HAM Indicator
D1706	〃	〃	GEN Indicator
D1707	1SS53	Si Diode	Switch (for Keypad Switch)
〜	〜	〜	〜
D1727	1SS53	Si Diode	Switch (for Keypad Switch)

FSK UNIT

Part No.	Device	Type	Function
Q1801	SN74LS00	IC	Oscillator (CW Sidetone Pitch, FSK Shift Frequency)
Q1802	TC9122P	〃	Programmable Divider (for CW Sidetone Pitch, FSK Shift Frequency)
Q1803	MC14027B	〃	1/4 Divider (for CW Sidetone Pitch, FSK Shift Frequency)
Q1804	SN74LS04	〃	Inverter (for FSK Shift Frequency Selector)
Q1805	SN74LS09	〃	AND Gate (〃)
Q1806	μPC78L05	〃	Regulator (for CW, FSK +5V Line)
Q1807	2SC1815GR	Transistor	Oscillator (Q1801) Controller
Q1808	〃	〃	KEY Switch
Q1809	〃	〃	〃
Q1810	〃	〃	FSK Buffer Amplifier
Q1811	〃	〃	FSK Shift Frequency External Control Switch
Q1812	〃	〃	CW Break-in Switch
Q1813	〃	〃	CW Break-in Delay Controller
Q1814	〃	〃	CW Sidetone Buffer Amplifier

D1801	WZ034	Zener Diode	KEY Switch
D1802	1N270	Ge Diode	〃
D1803	1SS53	Si Diode	Diode Matrix (for CW Sidetone Pitch, FSK Shift Frequency Selector)
〉	〉	〉	〉
D1825	1SS53	Si Diode	Diode Matrix (for CW Sidetone Pitch, FSK Shift Frequency Selector)
D1826	1N270	Ge Diode	Diode OR (for FSK Shift Frequency Controller)
〉	〉	〉	〉
D1832	1N270	Ge Diode	Diode OR (for FSK Shift Frequency Controller)
D1833	HZ5C2	Zener Diode	Regulator (CW +5V Line)
D1834	1SS53	Si Diode	CW Break-in Switch
D1835	1N270	Ge Diode	KEY Switch
X1801	6.8MHz	Crystal (HC-18/U)	Oscillator (for CW Sidetone Pitch, FSK Shift Frequency)

REG UNIT

Part No.	Device	Type	Function
Q1901	MC14572	IC	Relay Timing Controller
Q1902	2SC1815GR	Transistor	T/R Switch (RX ON)
Q1903	2SA950Y	〃	ANT Relay (RL9015) Driver
Q1904	2SA733AQ	〃	CPU TX 9V Switch (TX ON)
Q1905	〃	〃	Relay Driver (for RL1902; TX ON)
Q1906	2SC945AQ	〃	Regulator (+9V Line)
Q1907	〃	〃	〃 (〃)
Q1908	〃	〃	〃 (〃)
Q1909	2SC2002L	〃	Oscillator (DC-DC Converter)
Q1910	2SC1815Y	〃	Start up Current Limiter (+9V Bus)
Q1911	〃	〃	TX VOX Switch
Q1912	〃	〃	〃
Q1913	2SA733AQ	〃	Relay Driver (for RL1901)
Q1914	2SA950Y	〃	RX 9V Switch (RX ON)
Q1915	〃	〃	RX 13.5V Switch (RX ON)
Q1916	2SC1815GR	〃	T/R Switch (TX ON)
Q1917	2SA496Y	〃	TX 9V Switch (TX ON)
Q1918	〃	〃	TX 13.5V Switch (TX ON)
Q1919	2SA733AQ	〃	ANT Relay Driver (Q1903) Controller
Q1920	〃	〃	TX Monitor Switch Controller
D1901	1SS53	Si Diode	Diode OR (for TX Controller)
D1902	〃	〃	Back Pulse Canceller (for RL1901)
D1903	〃	〃	〃 (for RL1902)
D1904	〃	〃	Diode OR (for TX Controller)
D1905	Not Used		
D1906	WZ051	Zener Diode	Regulator (+9V Line)
D1907	1S1588	Si Diode	Rectifier (−9V Line)
D1908	HZ7A2	Zener Diode	Regulator (〃)
D1909	HZ11C1	〃	〃 (DISP 10V and CPU TX 9V)
D1910	1SS53	Si Diode	Temperature Compensator for D1911
D1911	HZ3C1	Zener Diode	Start up Limiter Regulator
D1912	Not Used		
D1913	〃		

D1914	1N270	Ge Diode	Delay Controller
D1915	HZ3C3	Zener Diode	Regulator (–9V Line)
D1916	1N270	Ge Diode	Switch (CW/TX 9V for Monitor)
D1917	WZ033	Zener Diode	TX Monitor Switch (Q1920) Bias Switch (CW)
D1918	1SS53	Si Diode	" " " CW Switch
D1919	1N270	Ge Diode	Monitor RX IF Disable Switch
D1920	"	"	"
D1921	1SS53	Si Diode	Reverse Voltage Protector for Q1901

SWITCH UNIT A

Part No.	Device	Type	Function
Q2301	2SC1815GR	Transistor	CW-CAL Switch
D2301	1SS53	Si Diode	VOX Control Switch (CW-CAL)

PHOTO-INTERRUPTER UNIT

Part No.	Device	Type	Function
RS2601	EE-SH3-X-1	Photo-Interrupter	Frequency Controller
RS2602	"	"	"

PROTECTOR UNIT

Part No.	Device	Type	Function
Q2901	AN6551	IC	Current Limiter
D2901	1S1555	Si Diode	External ALC Switch
D2902	"	"	"
D2903	"	"	ALC Switch

CONTROL UNIT

Part No.	Device	Type	Function
Q3501	AN6551	IC	Sensor Signal DC Amplifier
Q3502	2SC1815Y	Transistor	Fan Motor Driver (Q3503) Controller
Q3503	2SD592Q	"	Fan Motor Driver
Q3504	NJM78L08	IC	Regulator (CONTROL Unit +8V Line)
D3501	1S1555	Si Diode	Switch (for PS Unit Sensor Signal)
D3502	"	"	" (for PA Unit Sensor Signal)
D3503	"	"	Reverse Voltage Protector (for Q3503)

MONITOR UNIT

Part No.	Device	Type	Function
Q3601	2SK107-3	JFET	RX AF Gate (RX ON)
Q3602	2SA733AP	Transistor	CW Gate Controller
Q3603	2SK107-3	JEFT	TX Monitor Gate
Q3604	"	"	" Sidetone Gate
Q3605	"	"	AGC Gate
Q3606	2SC509Y	Transistor	Display Dim Controller
D3601	1SS106	Schottky Barrier Di.	RX AF Gate Switch
D3602	1SS53	Si Diode	Switch (CW 9V Line)
D3603	1SS106	Schottky Barrier Di.	AGC Gate Switch

100W PS UNIT

Part No.	Device	Type	Function
Q01	2N5685	Transistor	Regulator (+24V Line)
Q02	2SD717Y	"	" (+13.5V Line)
Q201	2SK147BL	JFET	" (+24V Line)
Q202	2SA1012Y	Transistor	" (")
Q203	2SA950Y	"	" (")
Q301	2SK19TM-GR	JFET	" (+13.5V Line)
Q302	2SA950Y	Transistor	" (")
Q303	2SA1015GR	"	" (")
D01	S25VB10	Si Diode Bridge	Rectifier (+24V Line)
D02	S5VB10	"	" (+13.5V Line)
D201	10D1	Si Diode	" (Sample Voltage)
D202	"	"	" (")
D203	HZ6C1	Zener Diode	Regulator (+24V Line)
D301	10D1	Si Diode	Rectifier (Sample Voltage)
D302	"	"	" (")
D303	HZ6C1	Zener Diode	Regulator (+13.5V Line)
TH01	112302-2	Thermistor	Fan Motor Control Sensor

100W PA UNIT

Part No.	Device	Type	Function
Q8001	2SC1589	Transistor	TX Driver Amplifier
Q8002	2SC2395	"	"
Q8003	"	"	"
Q8004	MRF422	"	TX Final Amplifier
Q8005	"	"	"
Q8006	μPC7808H	IC	Regulator (Final Amplifier Bias)
Q8007	2SD288K	Transistor	" (")

D8001	YZ033	Zener Diode	Regulator (Driver Amplifier Bias)
D8002	10D10	Si Diode	Temperature Compensator (Driver Amplifier Bias)
D8003	"	"	" (")
D8004	"	"	" (Final Amplifier Bias)
D8005	"	"	" (")
TH8001	32D27	Thermistor	Fan Motor Control Sensor

10W PS UNIT

Part No.	Device	Type	Function
Q1501	μPC78L12	IC	Regulator (+13.5V Line)
Q1502	2SB529D	Transistor	" (")
Q1503	2SD745S	"	" (")
D1501	S5VB10	Si Diode Bridge	Rectifier (+13.5V Line)
D1502	10D1	Si Diode	" (Sample Voltage)
D1503	"	"	" (")
D1504	MV103	Varistor Diode	Temperature Compensator (+13.5V Line)

10W PA UNIT

Part No.	Device	Type	Function
Q2801	2SC2166	Transistor	TX Driver Amplifier
Q2802	2SC2509	"	TX Final Amplifier
Q2803	"	"	"
Q2804	2SD882Q	"	Regulator (Final Amplifier Bias)
Q2805	μPC78L08	IC	" (")
D2801	YZ033	Zener Diode	Regulator (Driver Amplifier Bias)
D2802	MV11	Varistor Diode	Temperature Compensator (Final Amplifier Bias)

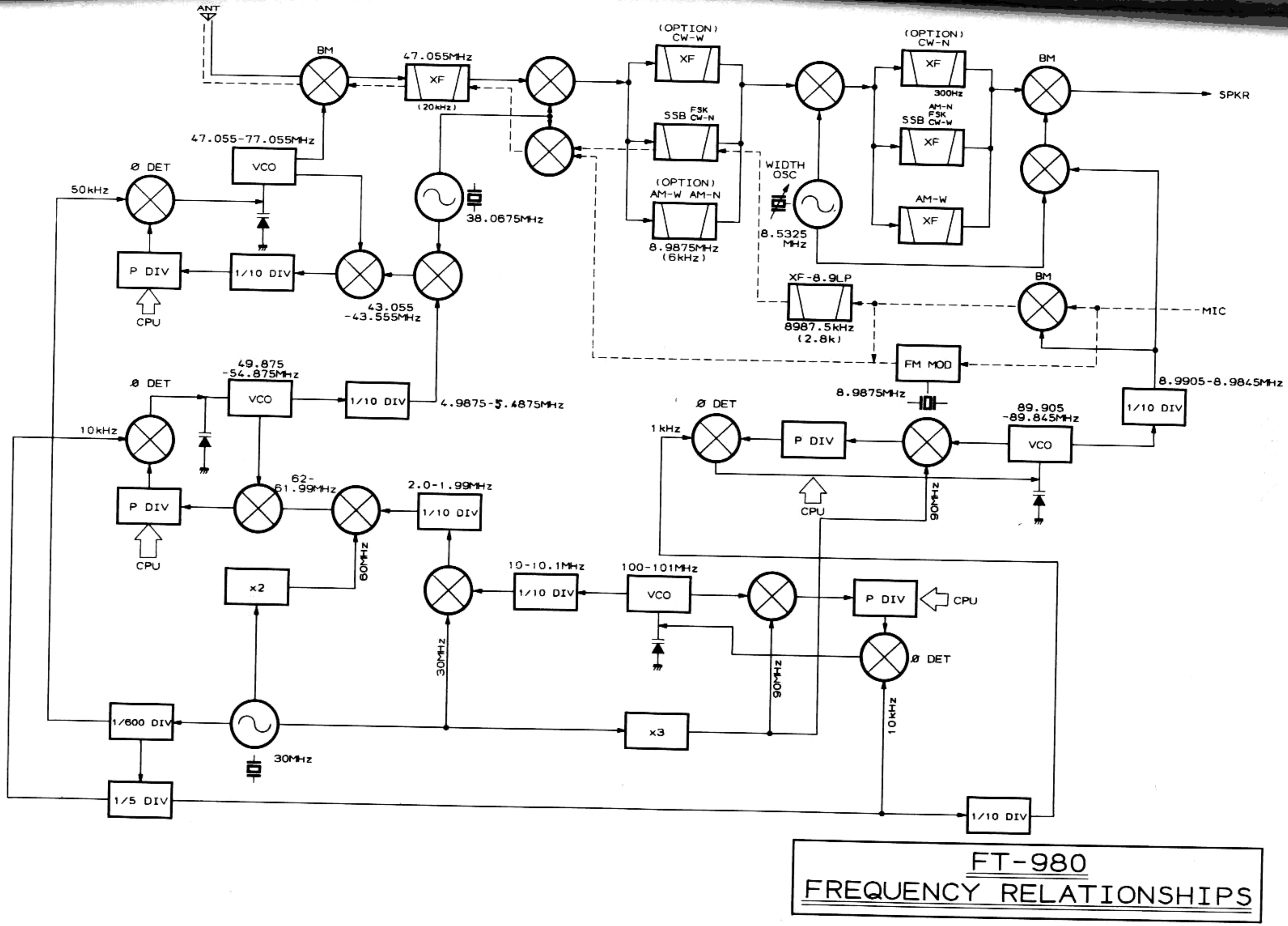

FT-980
FREQUENCY RELATIONSHIPS

SSB SIGNAL

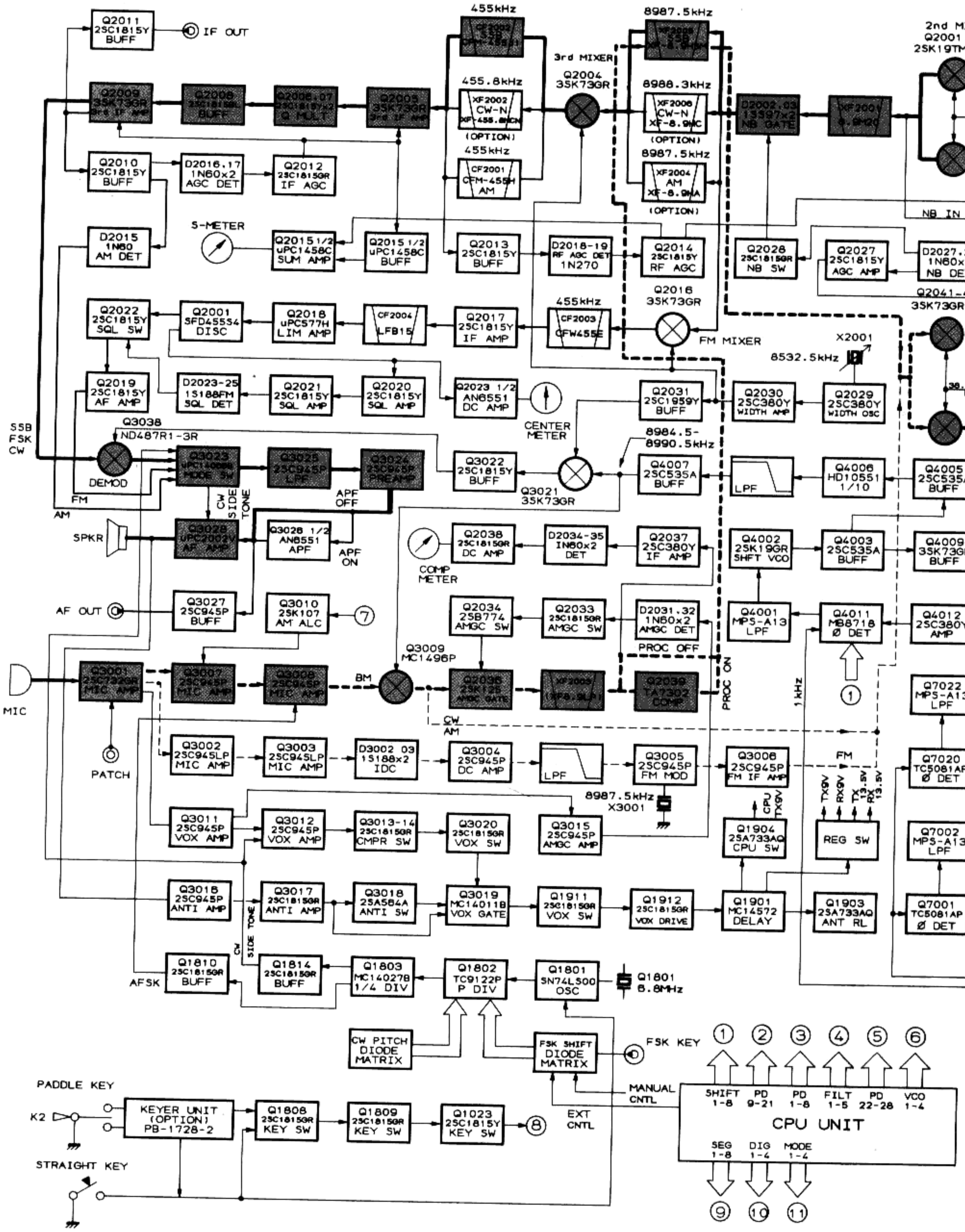
Q2011 2SC1815Y BUFF
IF OUT
Q2009 3SK73GR 3rd IF AMP
Q2008 2SC1815GR BUFF
Q2006,07 2SC1815Yx2 Q MULT
Q2005 3SK73GR 3rd IF AMP
455kHz
CF2002 SSB CFM-455H
455.8kHz
XF2002 CW-N XF-455.8NCN
(OPTION)
455kHz
CF2001 CFM-455H AM
3rd MIXER
Q2004 3SK73GR
8987.5kHz
XF2006 SSB XF-8.9HC
8988.3kHz
XF2006 CW-N XF-8.9NC
(OPTION)
8987.5kHz
XF2004 AM XF-8.9HA
(OPTION)
D2002,03 1S397x2 NB GATE
XF2001 8.9M20
2nd MIX
Q2001.0
2SK19TMG
Q2010 2SC1815Y BUFF
D2016,17 1N60x2 AGC DET
Q2012 2SC1815GR IF AGC
D2015 1N60 AM DET
S-METER
Q2015 1/2 uPC1458C SUM AMP
Q2015 1/2 uPC1458C BUFF
Q2013 2SC1815Y BUFF
D2018-19 RF AGC DET 1N270
Q2014 2SC1815Y RF AGC
Q2028 2SC1815GR NB SW
Q2027 2SC1815Y AGC AMP
D2027,28 1N60x2 NB DET
NB IN
Q2041-42
3SK73GRx2
Q2022 2SC1815Y SQL SW
Q2001 SFD455S4 DISC
Q2018 uPC577H LIM AMP
CF2004 LFB15
Q2017 2SC1815Y IF AMP
455kHz
CF2003 CFW455E
Q2016 3SK73GR
FM MIXER
X2001
8532.5kHz
Q2019 2SC1815Y AF AMP
D2023-25 1S188FM SQL DET
Q2021 2SC1815Y SQL AMP
Q2020 2SC1815Y SQL AMP
Q2023 1/2 AN6551 DC AMP
CENTER METER
Q2031 2SC1959Y BUFF
Q2030 2SC380Y WIDTH AMP
Q2029 2SC380Y WIDTH OSC
SSB FSK CW
Q3038
ND487R1-3R
DEMOD
Q3023 uPC1408B MODE SW
Q3025 2SC945P LPF
Q3024 2SC945P PREAMP
Q3022 2SC1815Y BUFF
8984.5-8990.5kHz
Q3021 3SK73GR
Q4007 2SC535A BUFF
LPF
Q4006 HD10551 1/10
Q4005 2SC535A BUFF
FM
AM
CW SIDE TONE
APF OFF
SPKR
Q3028 uPC2002V AF AMP
Q3026 1/2 AN6551 APF
APF ON
Q2038 2SC1815GR DC AMP
D2034-35 1N60x2 DET
Q2037 2SC380Y IF AMP
COMP METER
Q4002 2SK19GR SHFT VCO
Q4003 2SC535A BUFF
Q4009 3SK73GR BUFF
AF OUT
Q3027 2SC945P BUFF
Q3010 2SK107 AM ALC
7
Q2034 2SB774 AMGC SW
Q2033 2SC1815GR AMGC SW
D2031,32 1N60x2 AMGC DET
Q4001 MPS-A13 LPF
Q4011 MB8718 Ø DET
Q4012 2SC380Y AMP
PROC OFF
Q3009 MC1496P
Q3001 2SC732GR MIC AMP
Q3007 2SC945P MIC AMP
Q3008 2SC945P MIC AMP
BM
Q2036 2SK125 AMGC GATE
XF2005 (MPS-A13)
Q2039 TA7302 COMP
PROC ON
1kHz
1
Q7022 MPS-A13 LPF
MIC
PATCH
Q3002 2SC945LP MIC AMP
Q3003 2SC945LP MIC AMP
D3002 03 1S188x2 IDC
Q3004 2SC945P DC AMP
LPF
Q3005 2SC945P FM MOD
Q3006 2SC945P FM IF AMP
FM
CW
AM
8987.5kHz X3001
CPU TX9V
TX9V
RX9V
TX 13.5V
RX 13.5V
Q7020 TC5081AP Ø DET
Q3011 2SC945P VOX AMP
Q3012 2SC945P VOX AMP
Q3013-14 2SC1815GR CMPR SW
Q3020 2SC1815GR VOX SW
Q3015 2SC945P AMGC AMP
Q1904 2SA733AQ CPU SW
REG SW
Q7002 MPS-A13 LPF
Q3016 2SC945P ANTI AMP
Q3017 2SC1815GR ANTI AMP
Q3018 2SA564A ANTI SW
Q3019 MC14011B VOX GATE
Q1911 2SC1815GR VOX SW
Q1912 2SC1815GR VOX DRIVE
Q1901 MC14572 DELAY
Q1903 2SA733AQ ANT RL
Q7001 TC5081AP Ø DET
SIDE TONE
CW
Q1810 2SC1815GR BUFF
AFSK
Q1814 2SC1815GR BUFF
Q1803 MC14027B 1/4 DIV
Q1802 TC9122P P DIV
Q1801 SN74L500 OSC
Q1801 6.8MHz
CW PITCH DIODE MATRIX
FSK SHIFT DIODE MATRIX
FSK KEY
MANUAL CNTL
EXT CNTL
PADDLE KEY
K2
KEYER UNIT (OPTION) PB-1728-2
Q1808 2SC1815GR KEY SW
Q1809 2SC1815GR KEY SW
Q1023 2SC1815Y KEY SW
8
STRAIGHT KEY
1 2 3 4 5 6
SHIFT 1-8
PD 9-21
PD 1-8
FILT 1-5
PD 22-28
VCO 1-4
CPU UNIT
SEG 1-8
DIG 1-4
MODE 1-4
9 10 11

B SIGNAL PATHS

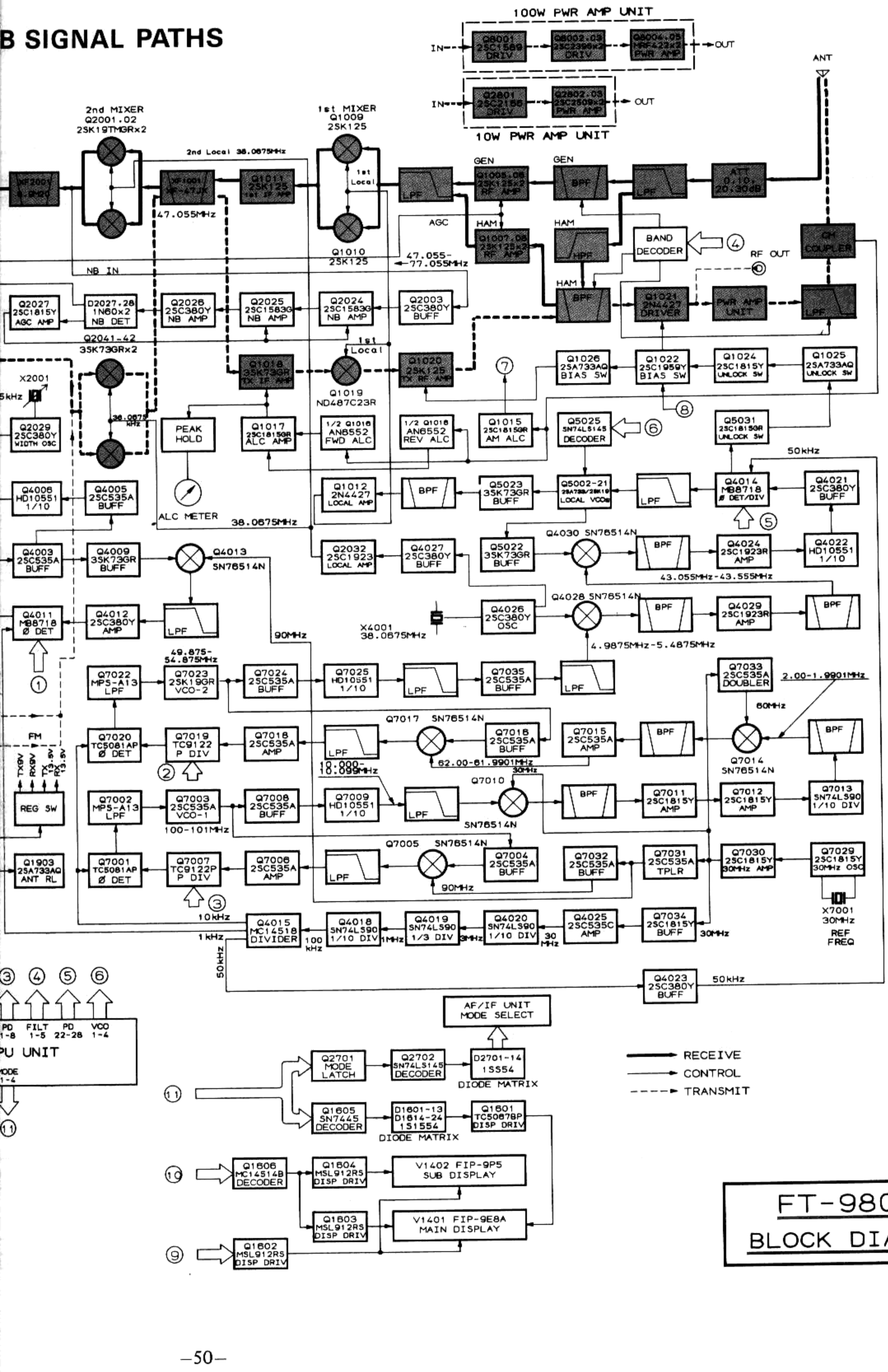

FT-980/S

BLOCK DIAGRAM

CW/FSK SIGNAL PATHS

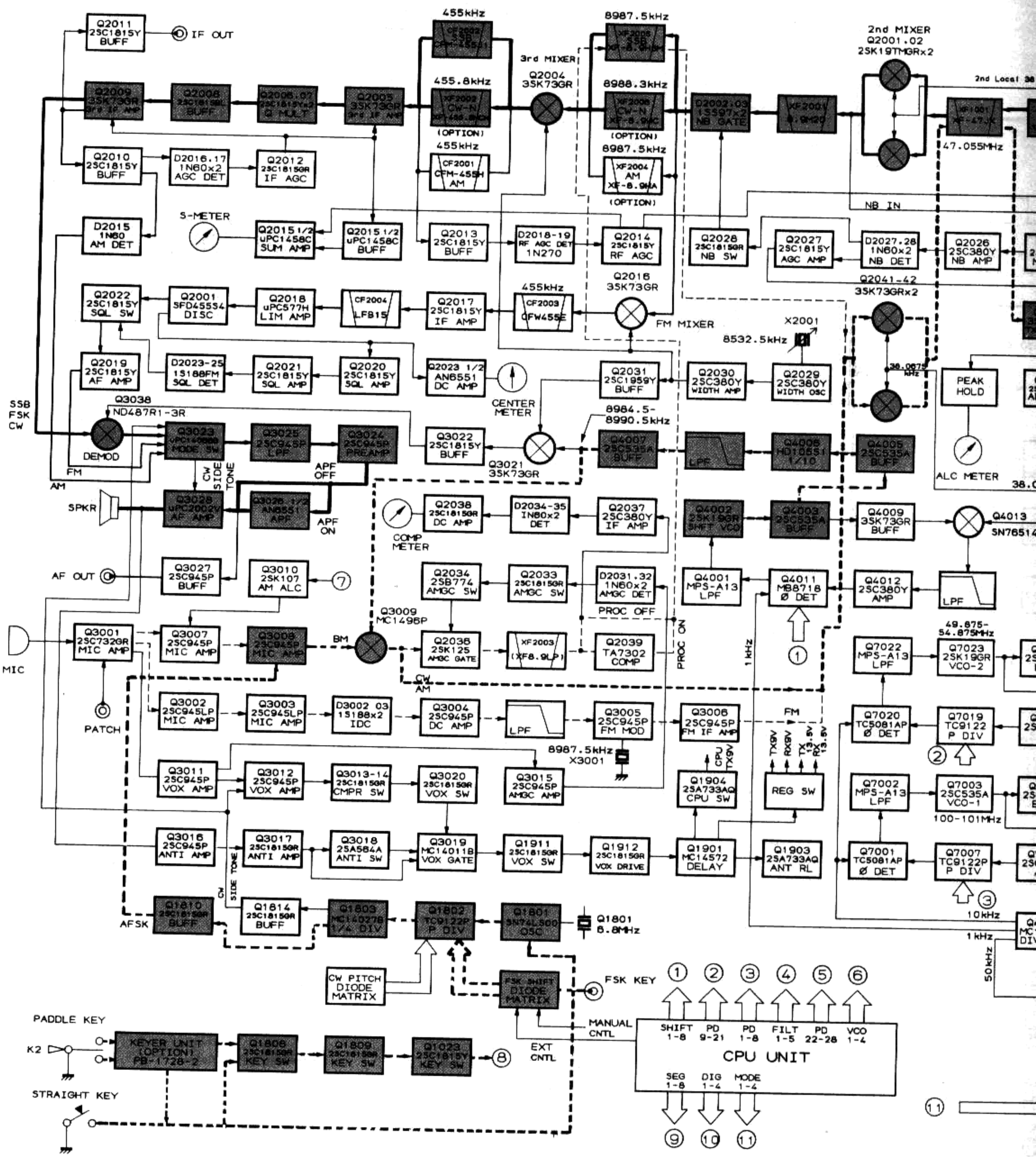

K SIGNAL PATHS

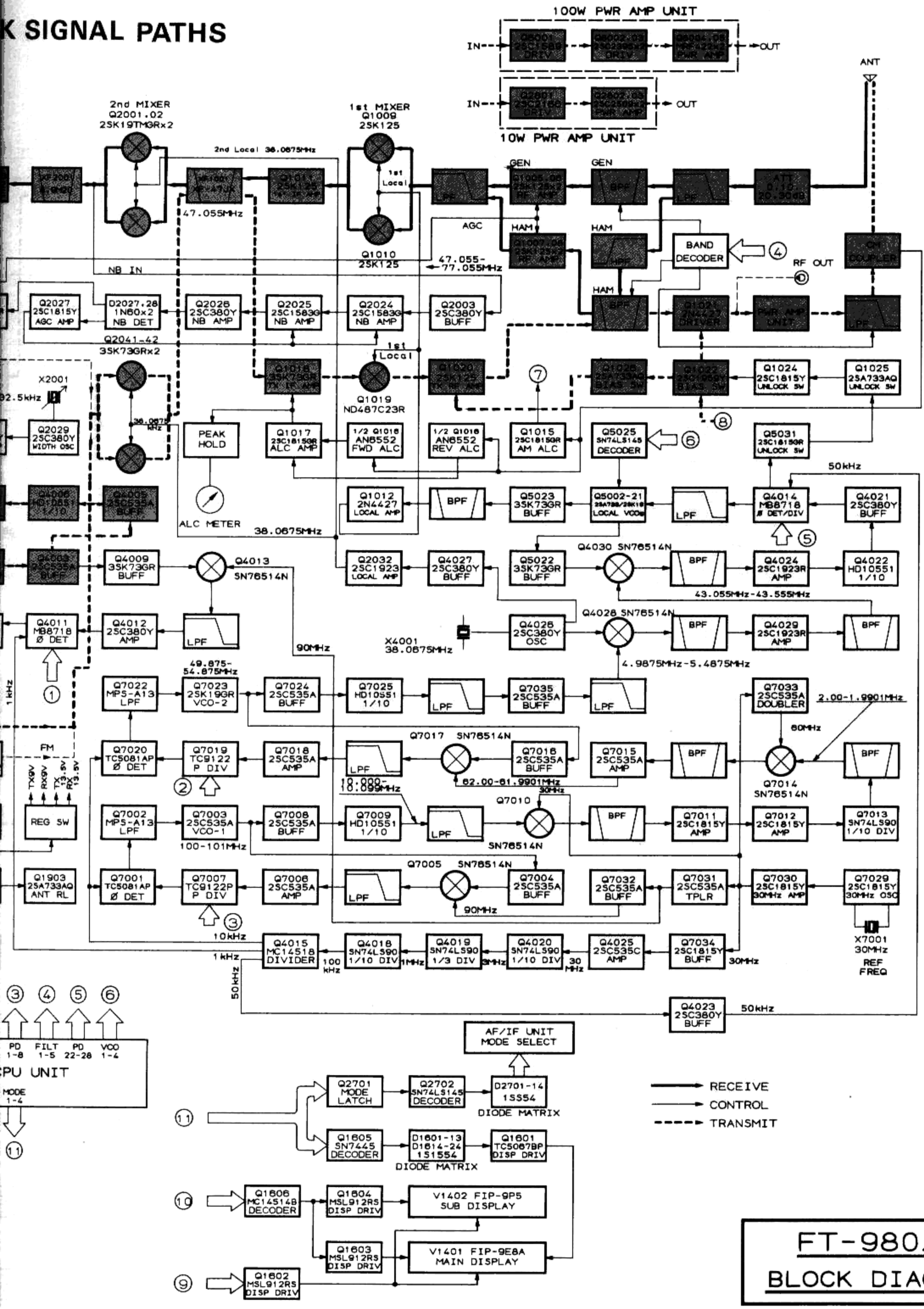

FT-980/S
BLOCK DIAGRAM

FM SIGNAL

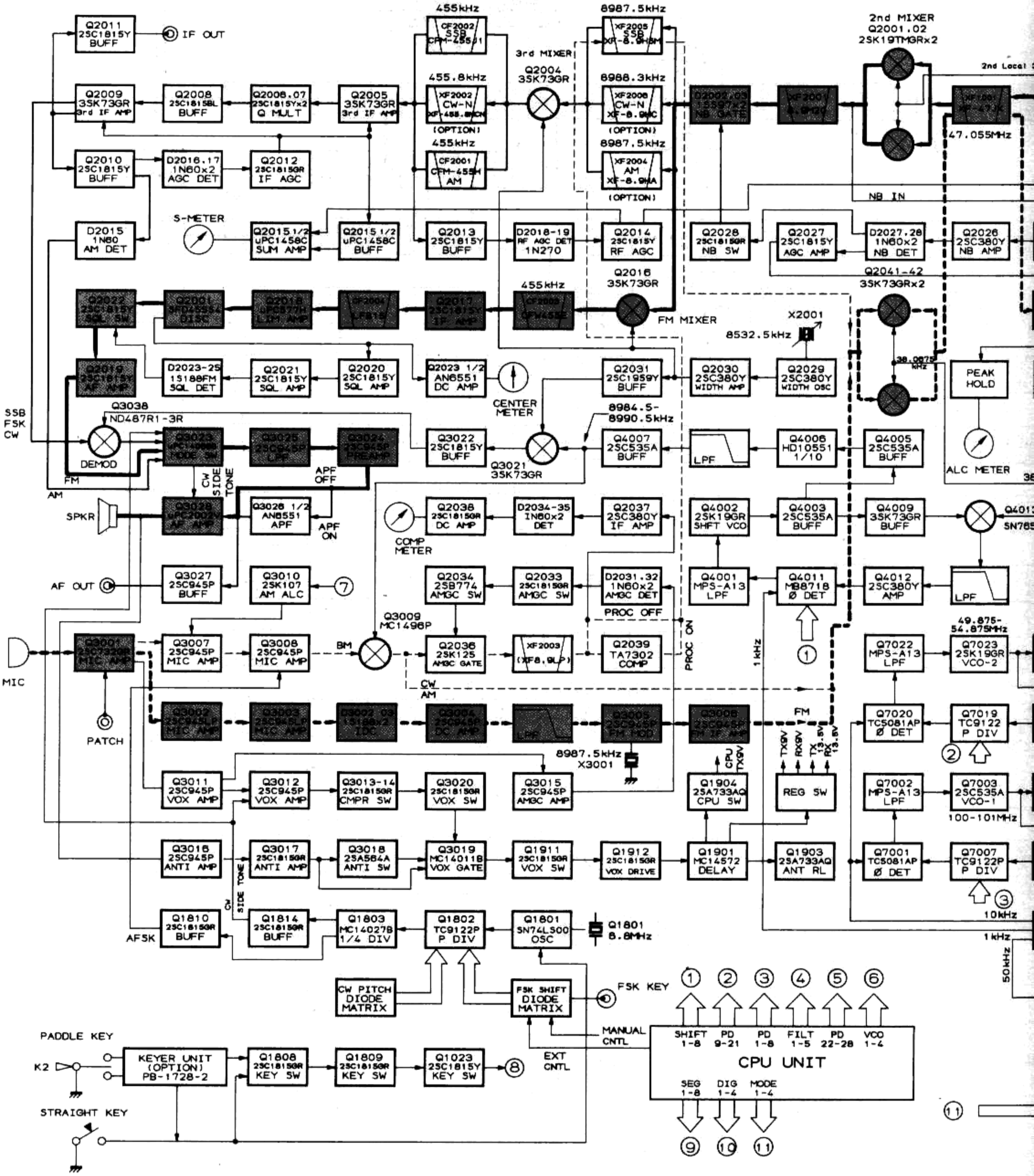
Q2011 2SC1815Y BUFF
IF OUT
Q2009 3SK73GR 3rd IF AMP
Q2008 2SC1815BL BUFF
Q2008.07 2SC1815Yx2 Q MULT
Q2005 3SK73GR 3rd IF AMP
455kHz
CF2002 SSB CFM-Z455J1
455.8kHz
XF2002 CW-N XF-455.8MCN
(OPTION)
455kHz
CF2001 CFM-455M AM
3rd MIXER
Q2004 3SK73GR
8987.5kHz
XF2005 SSB XF-8.9HSM
8988.3kHz
XF2006 CW-N XF-8.9MC
(OPTION)
8987.5kHz
XF2004 AM XF-8.9MA
(OPTION)
2nd MIXER
Q2001.02
2SK19TMGRx2
2nd Local
47.055MHz
Q2010 2SC1815Y BUFF
D2016.17 1N60x2 AGC DET
Q2012 2SC1815GR IF AGC
NB IN
D2015 1N60 AM DET
S-METER
Q2015 1/2 uPC1458C SUM AMP
Q2015 1/2 uPC1458C BUFF
Q2013 2SC1815Y BUFF
D2018-19 RF AGC DET 1N270
Q2014 2SC1815Y RF AGC
Q2028 2SC1815GR NB SW
Q2027 2SC1815Y AGC AMP
D2027.28 1N60x2 NB DET
Q2026 2SC380Y NB AMP
Q2041-42
3SK73GRx2
455kHz
Q2016 3SK73GR
FM MIXER
X2001
8532.5kHz
Q2022 2SC1815Y SQL SW
Q2001 SFD455E4 DISC
Q2018 uPC577H LIM AMP
CF2001 CFW455E
Q2017 2SC1815Y IF AMP
CF2002 CFW455E
Q2019 2SC1815Y AF AMP
D2023-25 1S188FM SQL DET
Q2021 2SC1815Y SQL AMP
Q2020 2SC1815Y SQL AMP
Q2023 1/2 AN6551 DC AMP
CENTER METER
Q2031 2SC1959Y BUFF
Q2030 2SC380Y WIDTH AMP
Q2029 2SC380Y WIDTH OSC
38.9875 kHz
PEAK HOLD
ALC METER
Q3038
ND487R1-3R
SSB FSK CW
DEMOD
FM
AM
Q3023 uPC1496B CODE SW
Q3025 2SC945P LPF
Q3024 2SC945P PREAMP
APF OFF
CW SIDE TONE
Q3022 2SC1815Y BUFF
Q3021 3SK73GR
8984.5-8990.5kHz
Q4007 2SC535A BUFF
LPF
Q4006 HD10551 1/10
Q4005 2SC535A BUFF
SPKR
Q3028 uPC2002V AF AMP
Q3026 1/2 AN6551 APF
APF ON
Q2038 2SC1815GR DC AMP
D2034-35 1N60x2 DET
Q2037 2SC380Y IF AMP
COMP METER
Q4002 2SK19GR SHFT VCO
Q4003 2SC535A BUFF
Q4009 3SK73GR BUFF
AF OUT
Q3027 2SC945P BUFF
Q3010 2SK107 AM ALC
Q2034 2SB774 AMGC SW
Q2033 2SC1815GR AMGC SW
D2031.32 1N60x2 AMGC DET
PROC OFF
Q4001 MPS-A13 LPF
Q4011 MB8718 Ø DET
Q4012 2SC380Y AMP
LPF
49.875-54.875MHz
Q3009 MC1496P
BM
Q3001 2SC732GR MIC AMP
Q3007 2SC945P MIC AMP
Q3008 2SC945P MIC AMP
Q2036 2SK125 AMGC GATE
XF2003 (XF8.9LP)
Q2039 TA7302 COMP
PROC ON
1kHz
Q7022 MPS-A13 LPF
Q7023 2SK19GR VCO-2
MIC
PATCH
CW AM
Q3002 2SC945LP MIC AMP
Q3003 2SC945LP MIC AMP
Q3002 03 1S188x2 IDC
Q3004 2SC945P DC AMP
LPF
Q3005 2SC945P FM MOD
Q3006 2SC945P FM IF AMP
FM
Q7020 TC5081AP Ø DET
Q7019 TC9122 P DIV
8987.5kHz X3001
CPU TX9V
TX9V RX9V TX 13.5V RX 13.5V
Q3011 2SC945P VOX AMP
Q3012 2SC945P VOX AMP
Q3013-14 2SC1815GR CMPR SW
Q3020 2SC1815GR VOX SW
Q3015 2SC945P AMGC AMP
Q1904 2SA733AQ CPU SW
REG SW
Q7002 MPS-A13 LPF
Q7003 2SC535A VCO-1
100-101MHz
Q3016 2SC945P ANTI AMP
Q3017 2SC1815GR ANTI AMP
Q3018 2SA564A ANTI SW
Q3019 MC140118 VOX GATE
Q1911 2SC1815GR VOX SW
Q1912 2SC1815GR VOX DRIVE
Q1901 MC14572 DELAY
Q1903 2SA733AQ ANT RL
Q7001 TC5081AP Ø DET
Q7007 TC9122P P DIV
10kHz
CW SIDE TONE
AFSK
Q1810 2SC1815GR BUFF
Q1814 2SC1815GR BUFF
Q1803 MC14027B 1/4 DIV
Q1802 TC9122P P DIV
Q1801 SN74LS00 OSC
Q1801 8.8MHz
1kHz
50kHz
CW PITCH DIODE MATRIX
FSK SHIFT DIODE MATRIX
FSK KEY
MANUAL CNTL
EXT CNTL
PADDLE KEY
K2
KEYER UNIT (OPTION) PB-1728-2
Q1808 2SC1815GR KEY SW
Q1809 2SC1815GR KEY SW
Q1023 2SC1815Y KEY SW
STRAIGHT KEY
CPU UNIT
SHIFT 1-8
PD 9-21
PD 1-8
FILT 1-5
PD 22-28
VCO 1-4
SEG 1-8
DIG 1-4
MODE 1-4

FM SIGNAL PATHS

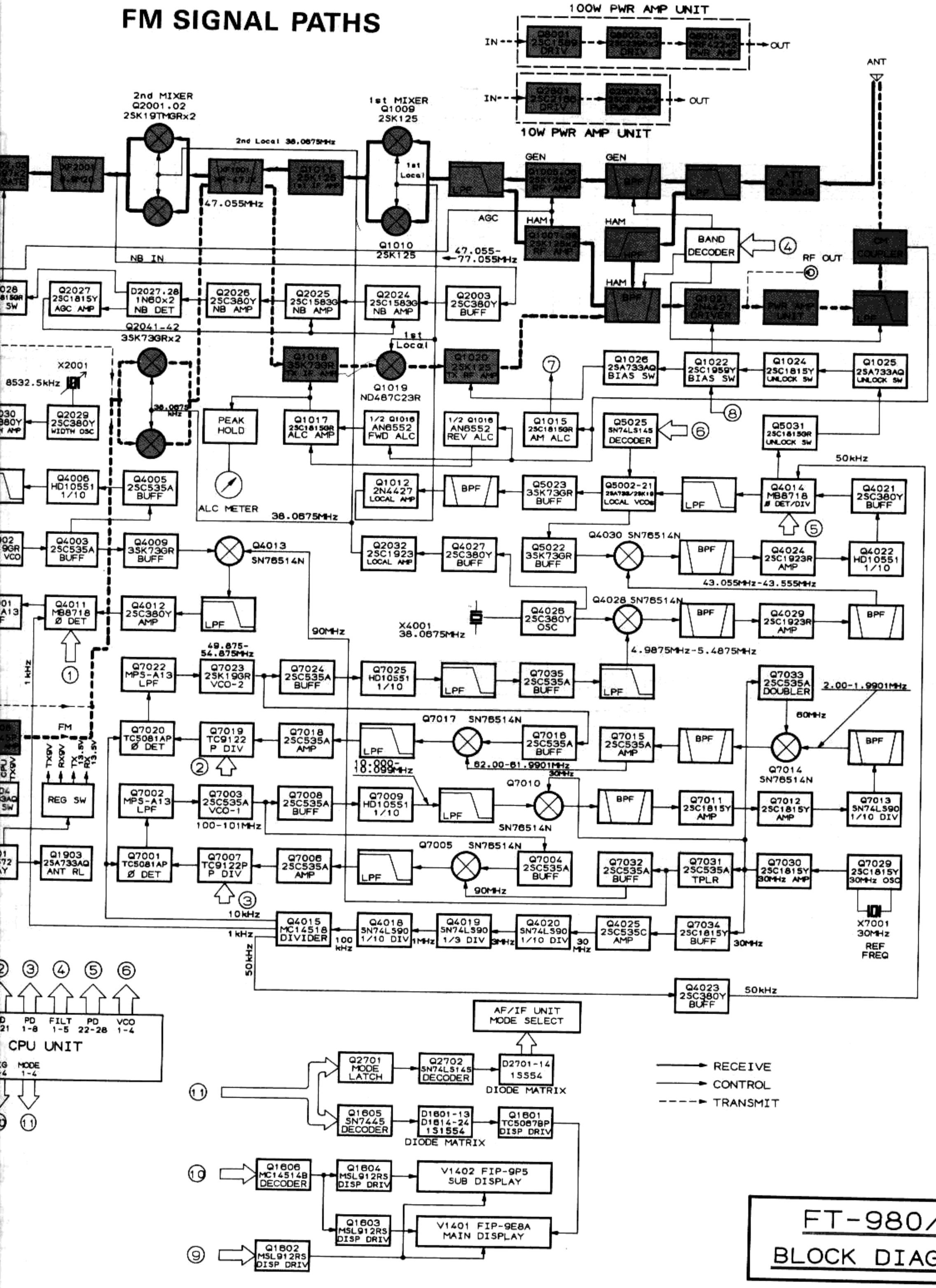

FT-980/S

BLOCK DIAGRAM

AM SIGNAL PATHS

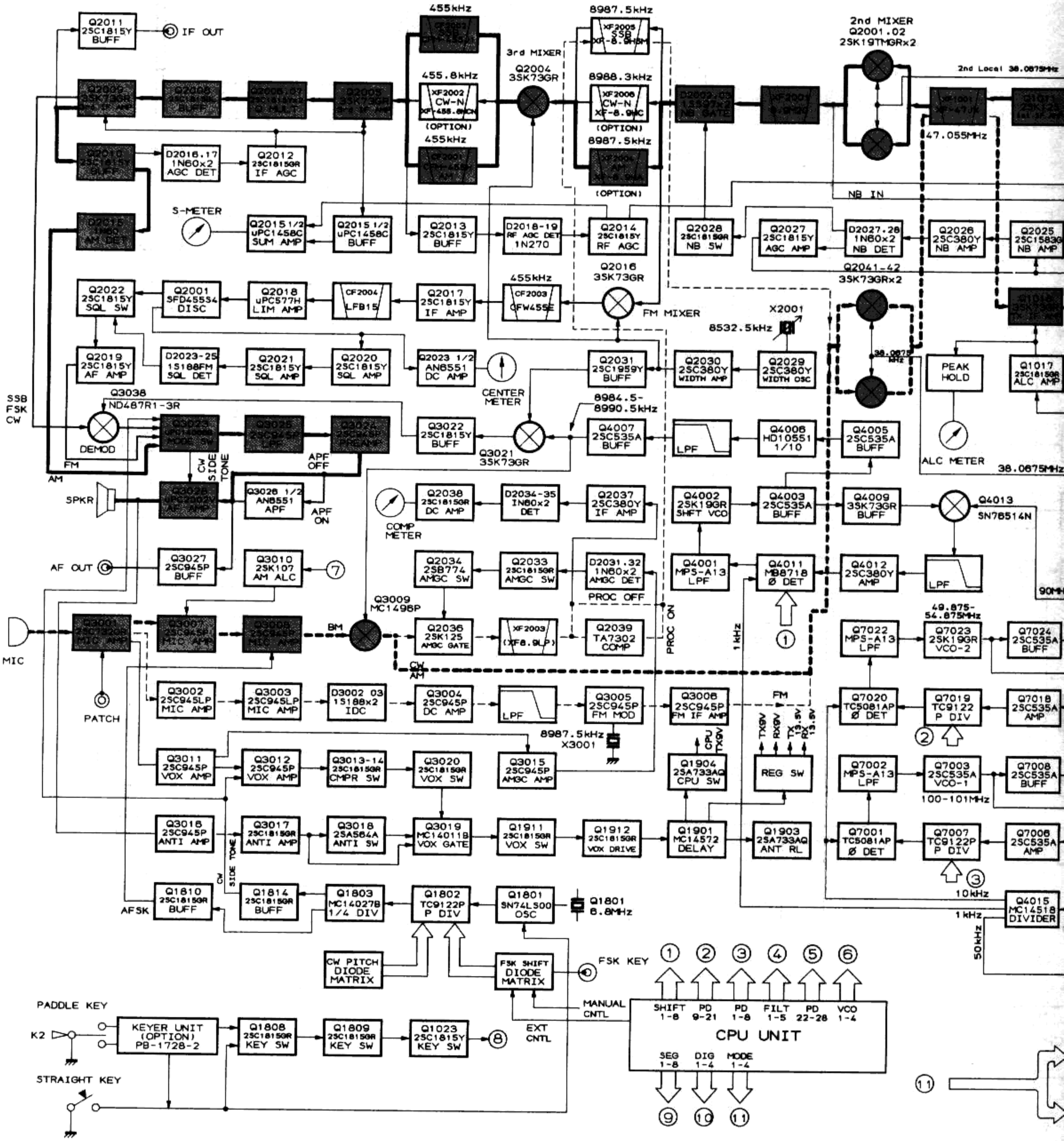

NAL PATHS

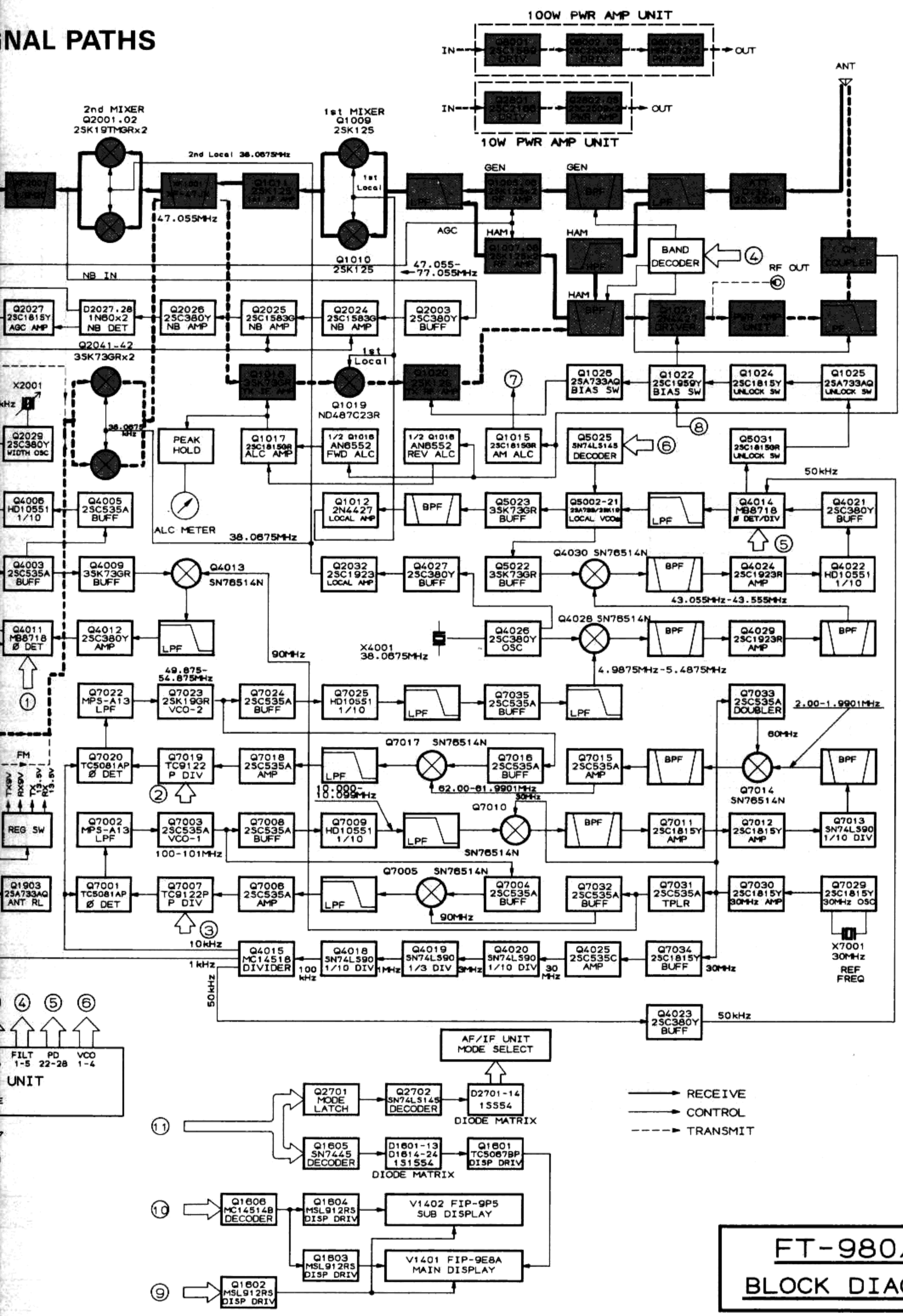

FT-980/S

BLOCK DIAGRAM

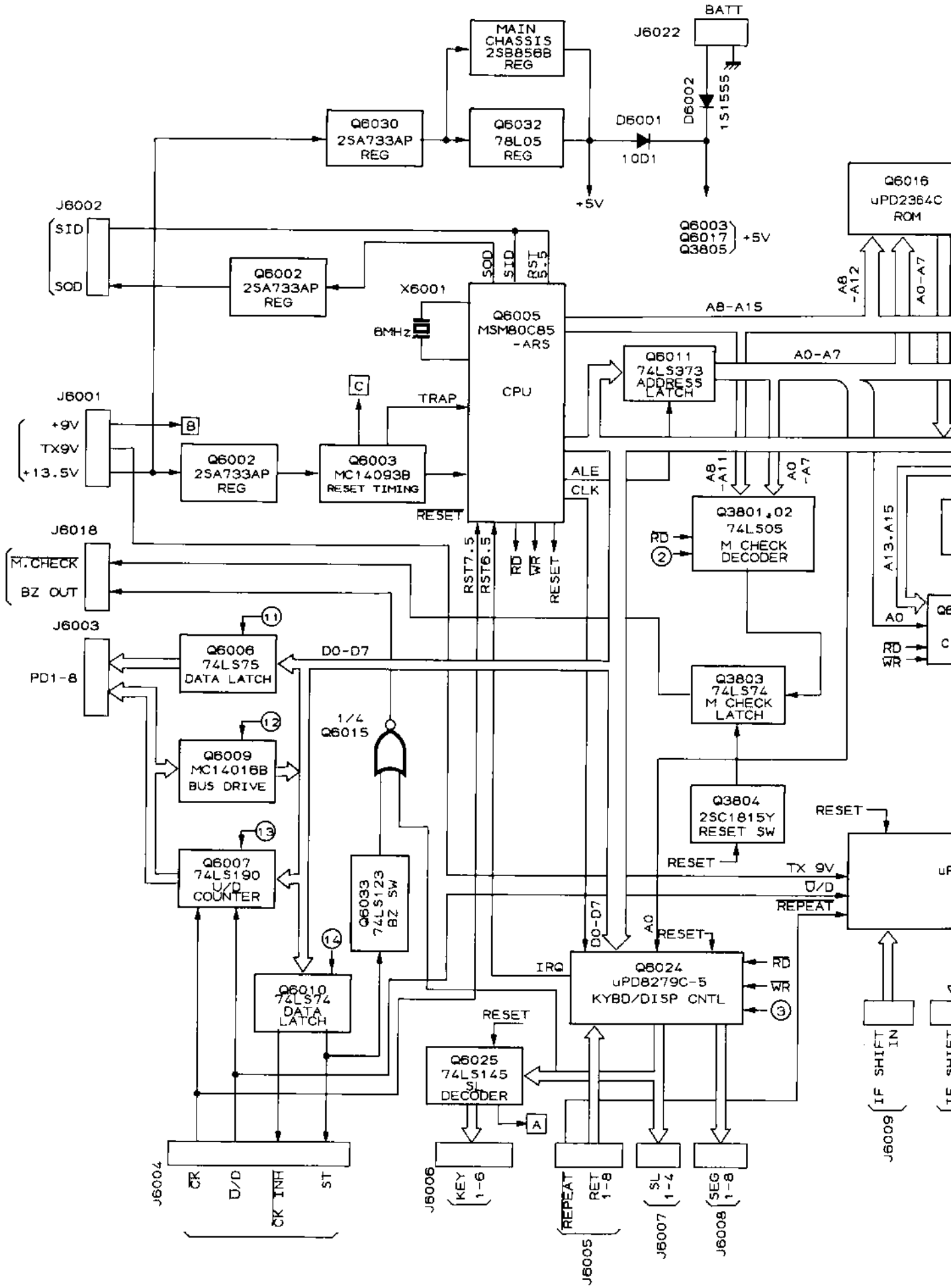
MAIN CHASSIS 2SB856B REG
BATT
J6022
D6002
1S1555
Q6030 2SA733AP REG
Q6032 78L05 REG
D6001
1OD1
+5V
Q6003 Q6017 Q3805 +5V
Q6016 uPD2364C ROM
J6002
SID
SOD
Q6002 2SA733AP REG
X6001
8MHz
Q6005 MSM80C85 -AR5
CPU
A8-A15
A0-A7
A8 -A12
A0-A7
Q6011 74LS373 ADDRESS LATCH
J6001
+9V
TX9V
+13.5V
TRAP
Q6002 2SA733AP REG
Q6003 MC14093B RESET TIMING
ALE
CLK
RESET
RST7.5
RST6.5
RD
WR
J6018
M.CHECK
BZ OUT
Q3801,02 74LS05 M CHECK DECODER
A13.A15
J6003
PD1-8
Q6006 74LS75 DATA LATCH
D0-D7
Q3803 74LS74 M CHECK LATCH
1/4 Q6015
Q6009 MC14016B BUS DRIVE
Q3804 2SC1815Y RESET SW
Q6007 74LS190 U/D COUNTER
Q6033 74LS123 BZ SW
TX 9V
U/D
REPEAT
IRQ
Q6024 uPD8279C-5 KYBD/DISP CNTL
Q6010 74LS74 DATA LATCH
Q6025 74LS145 SL DECODER
IF SHIFT IN
J6009
J6004
CR
U/D
CK INH
ST
J6006
KEY 1-6
J6005
REPEAT
RET 1-8
J6007
SL 1-4
J6008
SEG 1-8

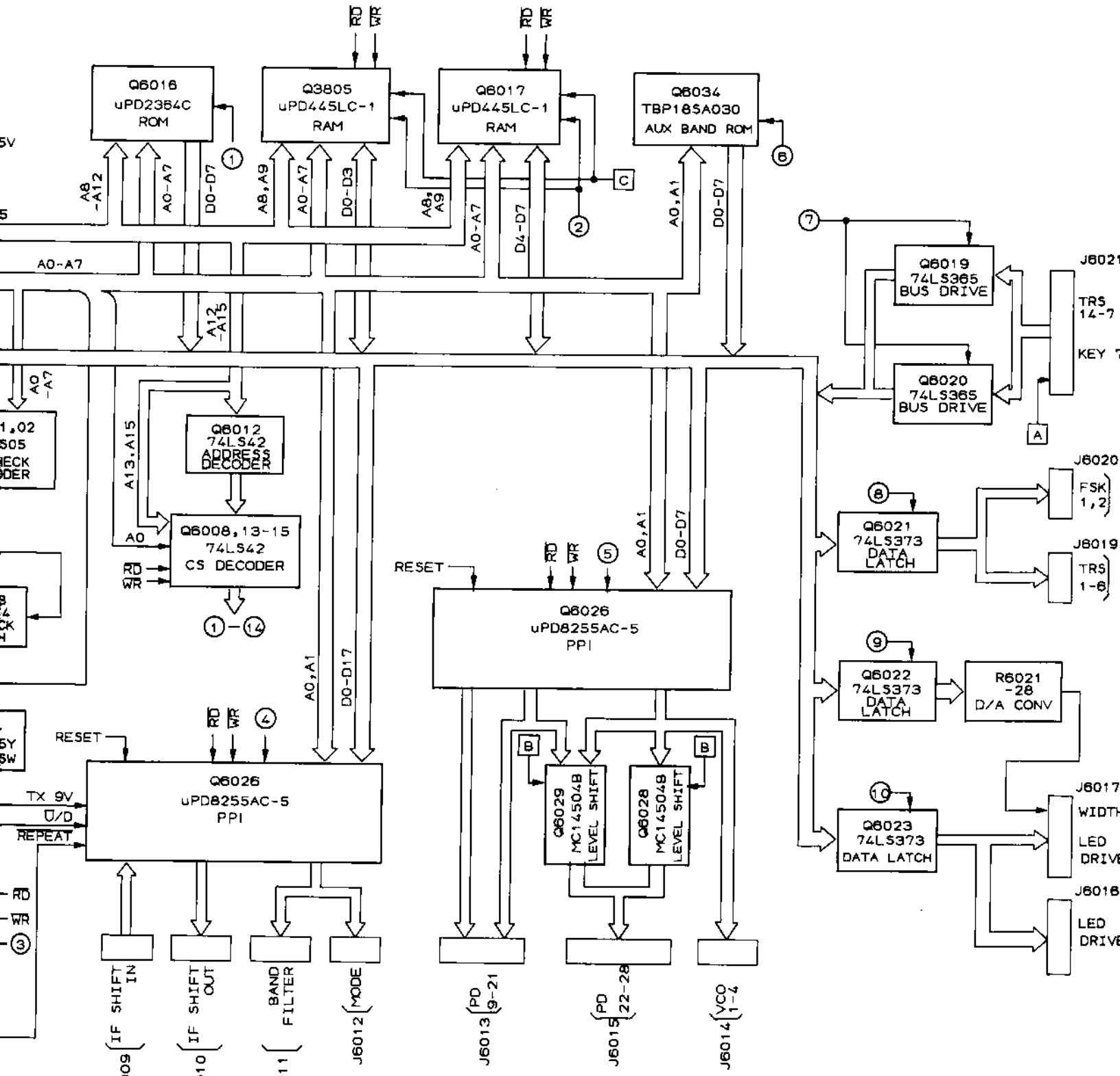

FT-980
CPU BOARD BLOCK DIAGRAM

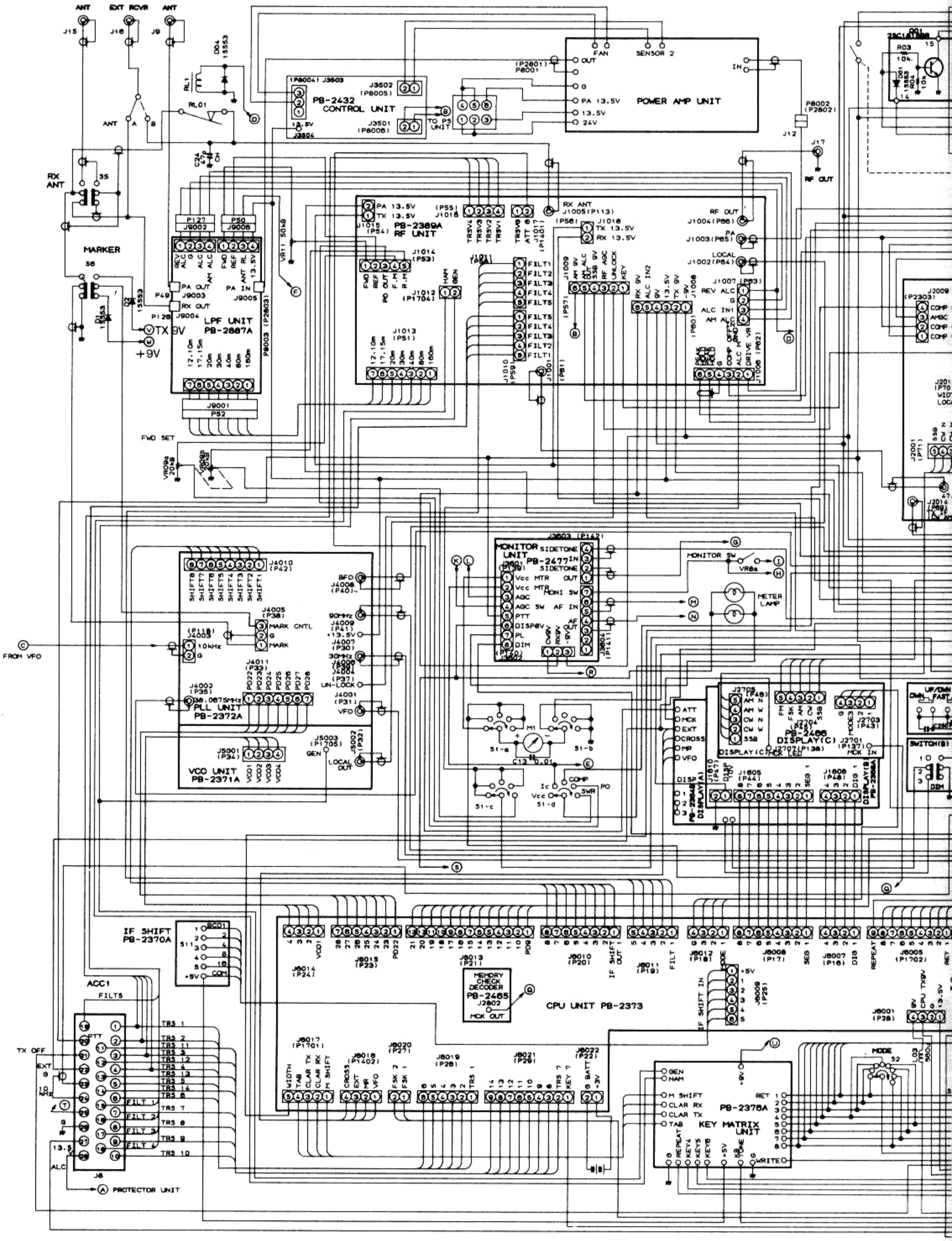
ANT
EXT RCVR
ANT
J15
J16
J9
D04
1S553
RL1
RL01
ANT
A
B
C24
47P
CH
RX ANT
35
MARKER
56
VR11 50kB
P127
J9002
P50
J9006
REV ALC G
ALC
ALC
AM
FWD REF
REF
ANT RL
13.5V
PA OUT
P49
J9003
RX OUT
P126
J9004
PA IN
J9005
P8003 (P2803)
LPF UNIT
PB-2887A
12.10m
17.15m
20m
30m
40m
80m
160m
TX 9V
+9V
J9001
P52
FWD SET
VR09a 20kB
VR09b 20kB
(P8004) J3503
J3502
(P8005)
PB-2432
CONTROL UNIT
13.5V
J3504
J3501
(P8008)
TO PS UNIT
(P2801)
P8001
OUT
G
PA 13.5V
13.5V
24V
FAN
SENSOR 2
IN
POWER AMP UNIT
P8002
(P2802)
J12
J17
RF OUT
PA 13.5V
TX 13.5V
(P55)
J1015
(P54)
PB-2389A
RF UNIT
J1014
(P53)
FWD
REF
F.M
R.M
PO OUT
HAM
GEN
J1012
(P1704)
J1013
(P51)
12.10m
17.15m
20m
30m
40m
80m
160m
TRSV4
TRSV3
TRSV2
TRSV1
TRSV0
ATT 0
J1017
(P1401)
RX ANT
J1005(P113)
(P56)
J1016
TX 13.5V
RX 13.5V
RF OUT
J1004(P86)
PA
J1003(P85)
LOCAL
J1002(P84)
J1011
(P58)
FILT1
FILT2
FILT3
FILT4
FILT5
FILT5
FILT4
FILT3
FILT2
FILT1
J1010
(P59)
J1001
(P61)
J1009
AM ALC OUT
SSB 9V
RF AGC
UNLOCK
KEY
(P57)
RX 9V
ALC IN2
9V
13.5V
TX 9V
-9V
J1008
(P60)
J1007 (P83)
REV ALC
G
ALC IN1
AM ALC
J1006 (P82)
PEAK HOLD
HOLD
G
COMP OFF
ALC MTR
DRIVE VR
J2009
(P2303)
COMP
AMGC
COMP
COMP
J2001
(P71)
J2014
(P69)
J4010
(P42)
SHIFT8
SHIFT7
SHIFT6
SHIFT5
SHIFT4
SHIFT3
SHIFT2
SHIFT1
BFO
J4006
(P40)
90MHz
J4009
(P41)
+13.5V
J4007
(P30)
30MHz
J4008
(P39)
J4004
(P37)
UN-LOCK
J4001
(P31)
VFO
J4005
(P38)
MARK CNTL
G
MARK
(P118)
J4003
10kHz
G
FROM VFO
J4011
(P33)
PD22
PD23
PD24
PD25
PD26
PD27
PD28
J4002
(P35)
38.0675MHz
PLL UNIT
PB-2372A
J5003
(P1705)
GEN
J5002
(P32)
LOCAL OUT
J5001
(P34)
VCO1
VCO2
VCO3
VCO4
VCO UNIT
PB-2371A
J3003 (P142)
MONITOR UNIT
PB-2477
J3601
(P139)
SIDETONE IN
SIDETONE OUT
Vcc MTR
Vcc MTR
AGC
AGC SW
PTT
DISP8V
PL
DIM
MONI SW
AF IN
AF OUT
CW9V
RX9V
-9V
J3504
(P1411)
MONITOR SW
VR8a
METER LAMP
M1
51-a
51-b
51-c
51-d
C13 0.01
Ic
Vcc
COMP
SWR
PO
ATT
MCK
EXT
CROSS
MR
VFO
J2705
(P46)
AM
CW
SSB
J2704
(P45)
J2703
(P43)
J2707(P138)
J2701
(P137)
MCK IN
DISPLAY(C) MCK (EN)
PB-2486
DISPLAY(C)
J1610
(P47)
DISP 10V
J1605
(P44)
J1606
(P48)
SEG 1
DIG 1
DISP
DISPLAY(A)
PB-2384B
DISPLAY(B)
PB-2386A
SWITCH(B)
DIM
IF SHIFT
PB-2370A
S11
BCD1
BCD2
BCD4
BCD8
BCD10
COM
+5V
ACC1
FILT5
PTT
TX OFF
EXT
10kHz
13.5V
ALC
TRS 1
TRS 2
TRS 11
TRS 3
TRS 12
TRS 4
TRS 13
TRS 5
TRS 14
TRS 6
TRS 7
TRS 8
TRS 9
TRS 10
FILT 1
FILT 2
FILT 3
FILT 4
J6
PROTECTOR UNIT
J6014
(P24)
VCO1
J6015
(P23)
PD22
J6013
(P211)
PD8
J6010
(P20)
IF SHIFT OUT
J6011
(P19)
FILT 1
J6012
(P18)
MODE
J6008
(P17)
SEG 1
J6007
(P16)
DIG 1
REPEAT
J6005
(P1702)
MEMORY CHECK DECODER
PB-2465
J2802
MCK OUT
CPU UNIT PB-2373
IF SHIFT IN
J6009
(P25)
+5V
J6001
(P28)
5V
CPU TX9V
13.5V
J6017
(P1701)
WIDTH
TAB
CLAR TX
CLAR RX
M SHIFT
J6018
(P1402)
CROSS
EXT
MR
VFO
J6020
(P27)
FSK 2
FSK 1
J6019
(P26)
TRS 1
J6021
(P29)
TRS 7
KEY 7
J6022
(P22)
BATT
+3V
GEN
HAM
M SHIFT
CLAR RX
CLAR TX
TAB
PB-2378A
KEY MATRIX UNIT
RET 1
REPEAT
KEY4
KEY5
KEY6
+5V
WRITE
+9V
MODE
52

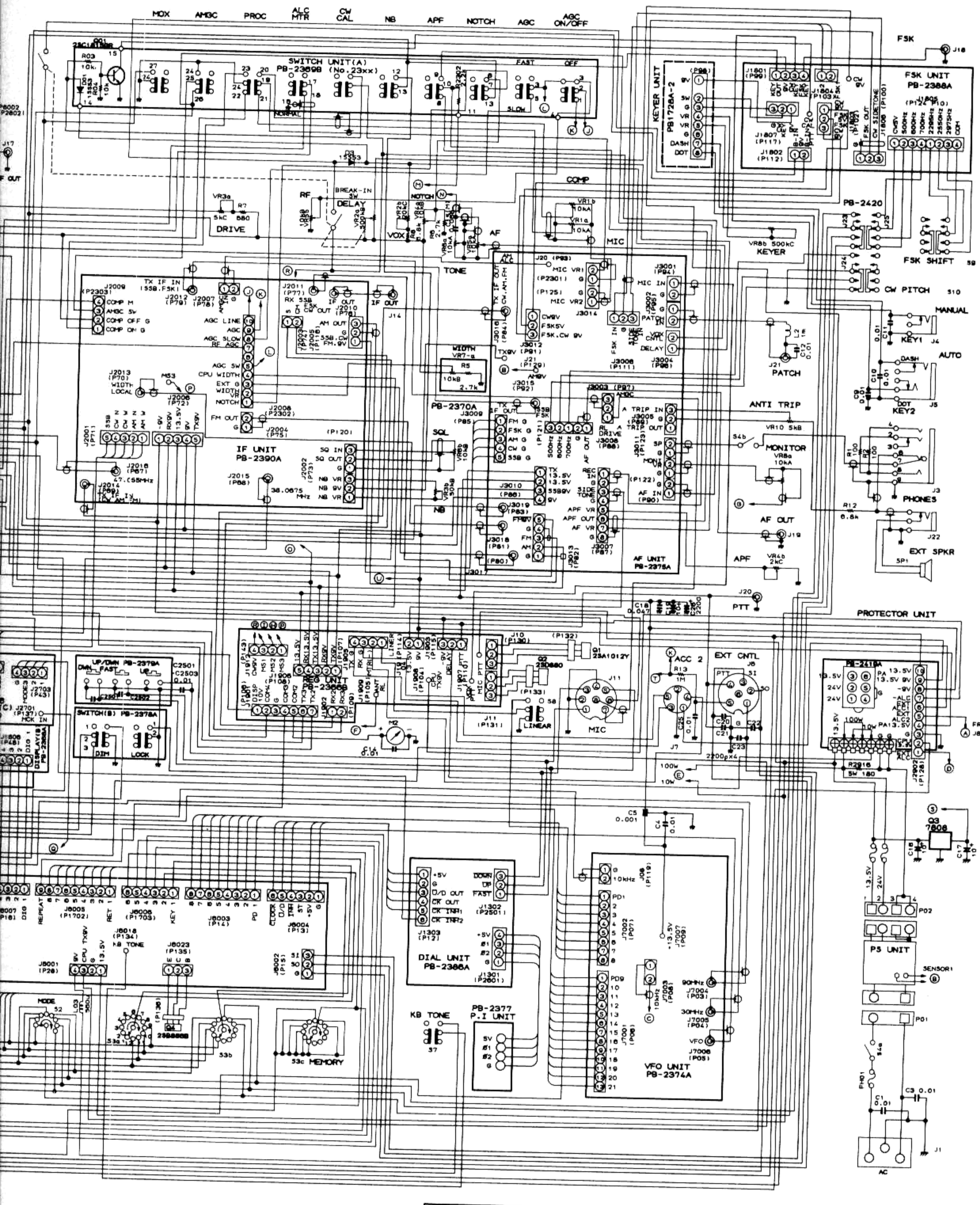

FT-980 CONNECTION DIAGRAM

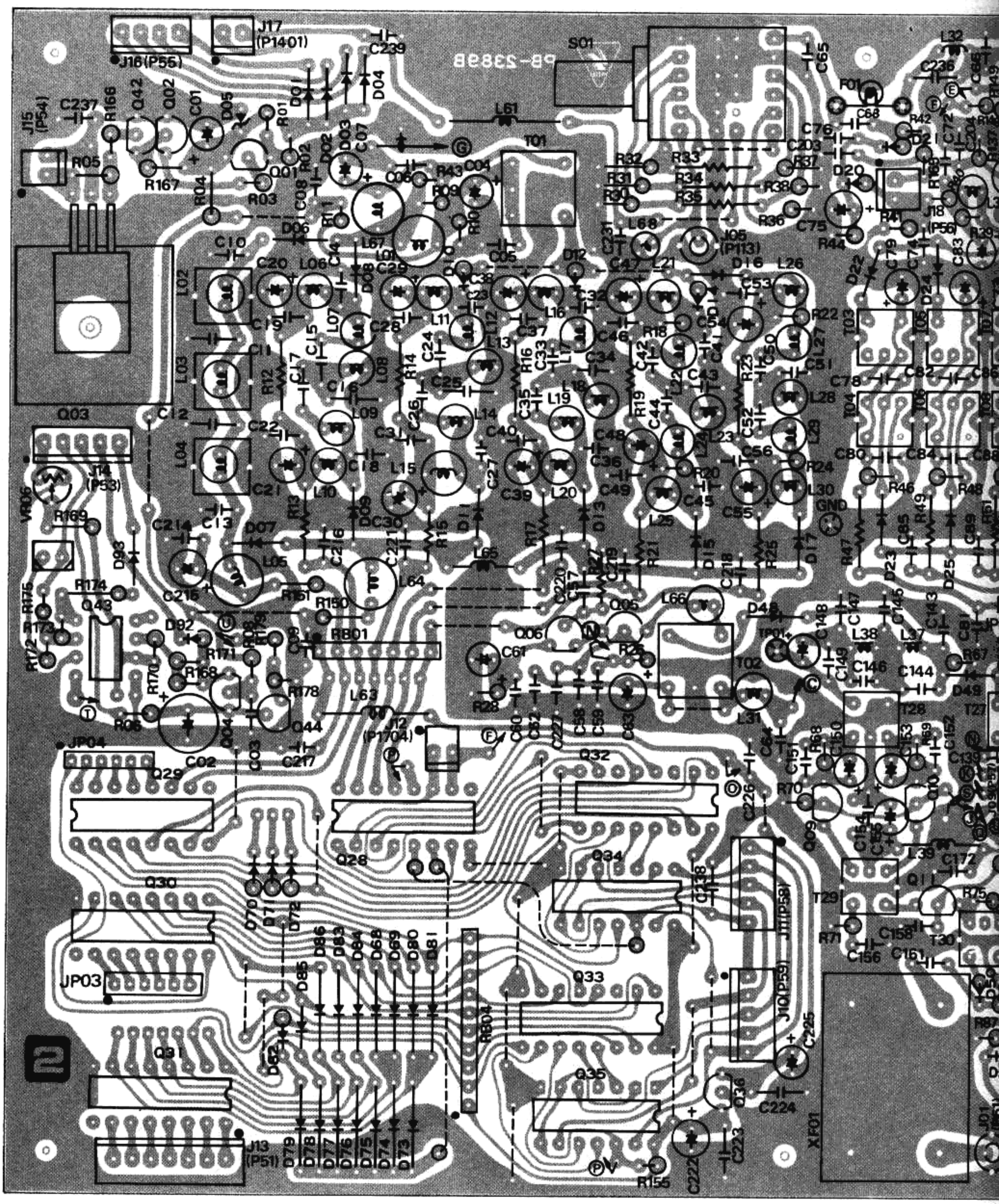
J17
(P1401)
J16(P55)
S01
J15
(P54)
J14
(P53)
J13
(P51)
J12
(P1704)
J18
(P56)
J105
(P113)
J10(P59)
JP01
JP03
JP04
TP01
TP02
XF01
GND
Q03
Q29
Q30
Q31
Q32
Q33
Q34
Q35
Q36
T01
T02
VR06
RB01
RB04
L01
L02
L03
L04
L05
L06
L07
L08
L09
L10
L11
L12
L13
L14
L15
L16
L18
L19
L20
L21
L23
L25
L26
L28
L30
L63
L64
L65
L66
L68
T03
T04
T05
T06
T07
T08
T27
T28
T29
T30
T31
T32
T33
T34
T35
T36
T37
T38
T39
T40
T41
T42
T43
T44
T45
T46
T47
T48
T49
T50
T51
T52
T53
T54
T55
T56
T57
T58
T59
T60
T61
T62
T63
T64
T65
T66
T67
T68
T69
T70
T71
T72
T73
T74
T75
T76
T77
T78
T79
T80
T81
T82
T83
T84
T85
T86
T87
T88
T89
T90
T91
T92
T93
T94
T95
T96
T97
T98
T99
T100
T101
T102
T103
T104
T105
T106
T107
T108
T109
T110
T111
T112
T113
T114
T115
T116
T117
T118
T119
T120
T121
T122
T123
T124
T125
T126
T127
T128
T129
T130
T131
T132
T133
T134
T135
T136
T137
T138
T139
T140
T141
T142
T143
T144
T145
T146
T147
T148
T149
T150
T151
T152
T153
T154
T155
T156
T157
T158
T159
T160
T161
T162
T163
T164
T165
T166
T167
T168
T169
T170
T171
T172
T173
T174
T175
T176
T177
T178
T179
T180
T181
T182
T183
T184
T185
T186
T187
T188
T189
T190
T191
T192
T193
T194
T195
T196
T197
T198
T199
T200
T201
T202
T203
T204
T205
T206
T207
T208
T209
T210
T211
T212
T213
T214
T215
T216
T217
T218
T219
T220
T221
T222
T223
T224
T225
T226
T227
T228
T229
T230
T231
C01
C02
C03
C04
C05
C06
C07
C08
C09
C10
C11
C12
C13
C14
C15
C16
C17
C18
C19
C20
C21
C22
C23
C24
C25
C26
C27
C28
C29
C30
C31
C32
C33
C34
C35
C36
C37
C38
C39
C40

RF UNIT PARTS LAYOUT (component side)

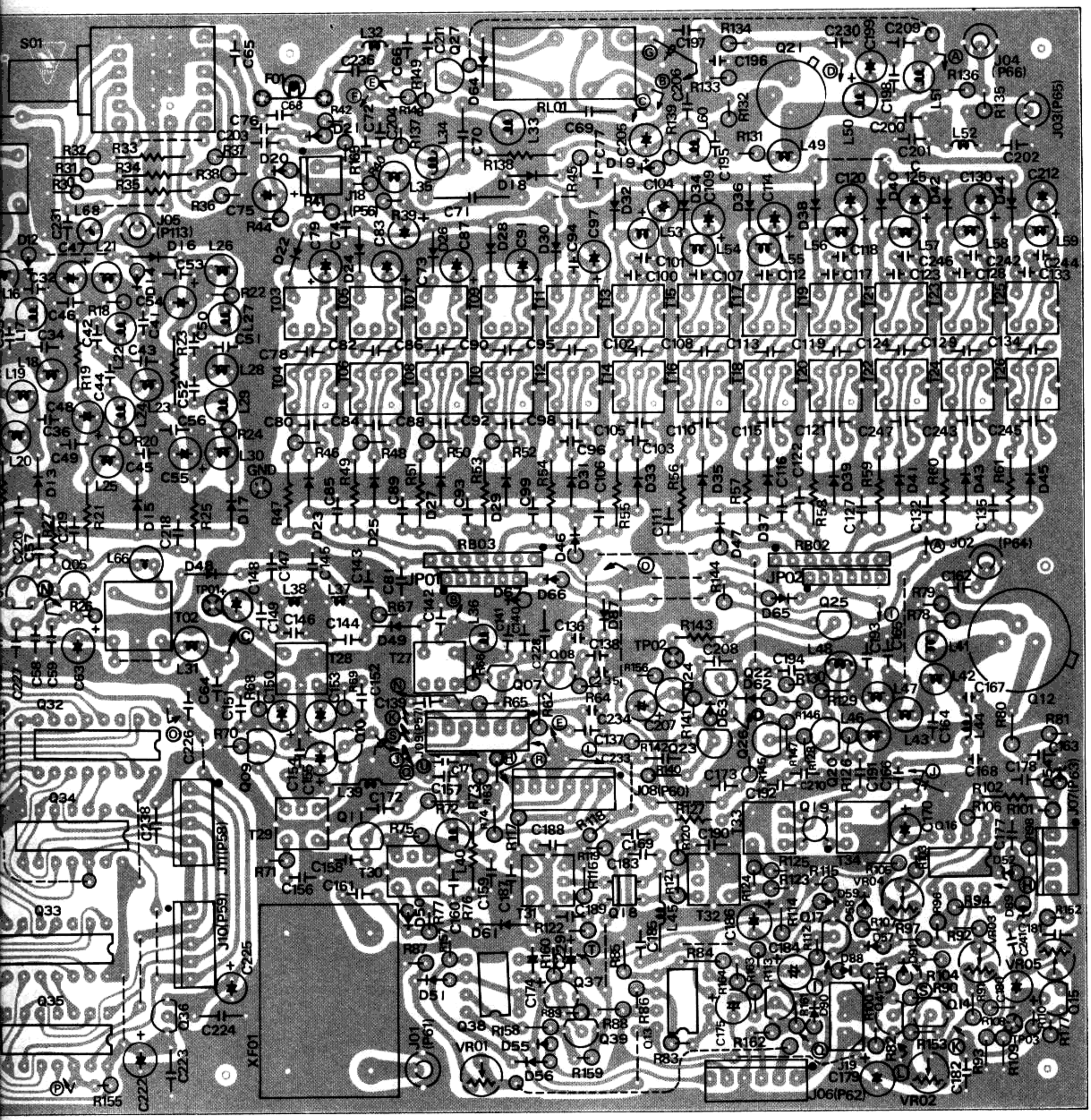
S01
F01
L32
C65
C66
C211
Q27
C236
D64
RL01
C197
R134
C230
C209
Q21
C196
C206
R133
R136
J04 (P66)
R135
J03(P65)
C198
L55
C200
L52
C202
C201
L50
L49
R131
R132
R139
L60
C195
C205
C69
C77
C70
L34
L33
R138
D19
D18
R45
C104
C109
C114
C120
C125
C130
C212
D32
D34
D36
D38
L53
L54
L55
L56
L57
L58
L59
C101
C118
C246
C242
C244
C100
C107
C112
C117
C123
C128
C133
T03
T05
T07
T09
T11
T13
T15
T17
T19
T21
T23
T25
T04
T06
T08
T10
T12
T14
T16
T18
T20
T22
T24
T26
C78
C82
C86
C90
C95
C102
C108
C113
C119
C124
C129
C134
C80
C84
C88
C92
C98
C105
C110
C115
C121
C247
C243
C245
R46
R48
R50
R52
C96
C103
C85
C89
C93
C99
C106
C111
C116
C122
C127
C132
C135
R47
R49
R51
R53
R54
R55
R56
R57
R58
R59
R60
R67
D23
D25
D27
D29
D31
D33
D35
D37
D39
D41
D43
D45
RB03
RB02
D46
D47
JP01
JP02
D67
D66
D65
J02 (P64)
C162
Q25
R144
R143
TP02
C208
C194
L48
L47
L46
L43
L44
L42
L41
C167
Q12
R80
R81
C163
C168
C178
R102
R106
R101
J07(P63)
C177
C188
C169
C183
C190
R118
R120
R121
R124
R125
R115
R123
T34
T33
T32
T31
T30
T29
T28
T27
C158
C161
C156
C159
C187
C189
C186
C185
C184
C181
C241
C188
C180
C182
C179
C175
C174
C173
C192
C191
C210
C176
C170
C171
C172
C157
C154
C155
C153
C152
C151
C150
C149
C148
C147
C146
C145
C144
C143
C142
C141
C140
C139
C138
C137
C136
C234
C207
C233
C228
C227
C226
C225
C224
C223
C222
C238
C220
C219
C218
C217
C216
C215
C214
C213
C204
C203
C76
C68
C72
C75
C83
C87
C94
C97
C79
C81
C73
C74
C71
C67
C64
C63
C59
C58
C57
C54
C53
C52
C51
C50
C49
C48
C47
C46
C45
C44
C43
C42
C41
C40
C39
C38
C37
C36
C34
C32
C31
C30
C29
C28
C27
C26
C25
C24
C23
C22
C21
C20
C18
C17
C16
C15
C14
C13
C12
C11
C10
C9
C8
C7
C6
C5
C4
C3
C2
C1
R32
R33
R34
R35
R36
R37
R38
R39
R41
R42
R44
R31
R30
R27
R26
R25
R24
R23
R22
R21
R20
R19
R18
R17
R16
R15
R14
R13
R12
R11
R10
R9
R8
R7
R6
R5
R4
R3
R2
R1
D22
D24
D26
D28
D30
D17
D15
D13
D12
L68
L66
L38
L37
L36
L35
L31
L30
L29
L28
L27
L26
L25
L24
L23
L22
L21
L20
L19
L18
L17
L16
L15
L14
L13
L12
L11
L10
L9
L8
L7
L6
L5
L4
L3
L2
L1
Q34
Q33
Q32
Q35
Q36
Q37
Q38
Q39
Q08
Q07
Q11
Q18
Q19
Q17
Q16
Q14
Q13
Q12
Q10
Q09
Q005
D62
D63
D61
D59
D58
D57
D56
D55
D54
D53
D52
D51
D50
D49
D48
D44
D42
D40
D24
D22
D20
D21
D16
D14
D12
D10
D8
D6
D4
D3
D2
D1
J18 (P56)
J05 (P113)
J06(P62)
J08(P60)
J09(P57)
J10(P59)
J11(P58)
J01 (P61)
TP01
TP03
VR01
VR02
VR03
VR04
VR05
XF01
R162
R163
R164
R165
R166
R167
R168
R169
R170
R171
R172
R173
R174
R175
R176
R177
R178
R179
R180
R181
R182
R183
R184
R185
R186
R187
R188
R189
R190
R191
R192
R193
R194
R195
R196
R197
R198
R199
R200
R201

RF UNIT PARTS LAYOUT (solder side)

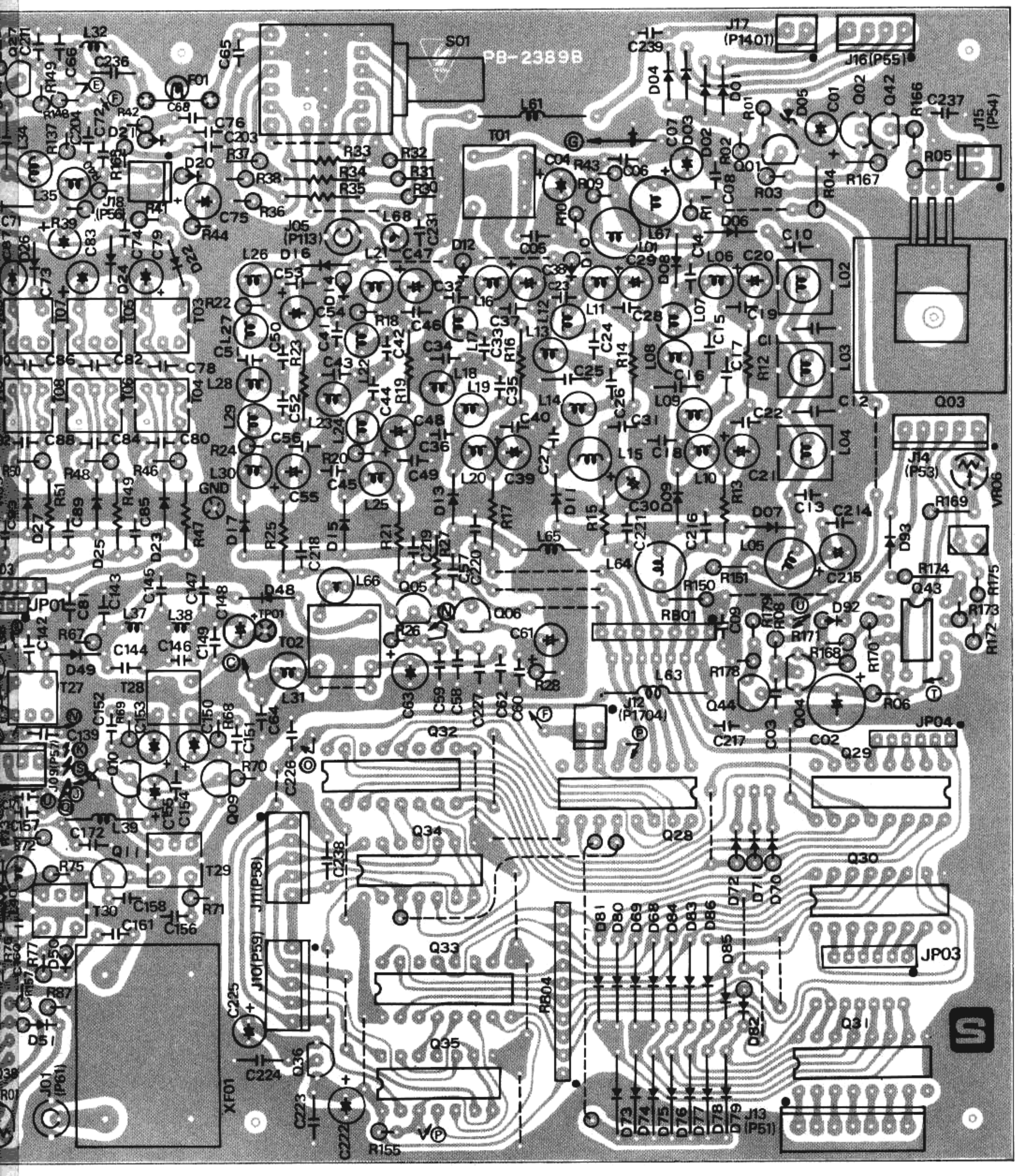

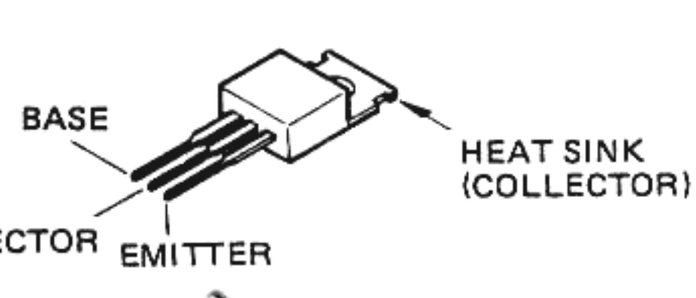

2SC1012Y

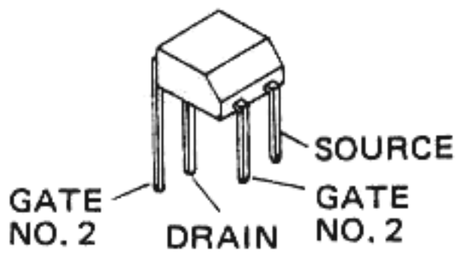

3SK73GR

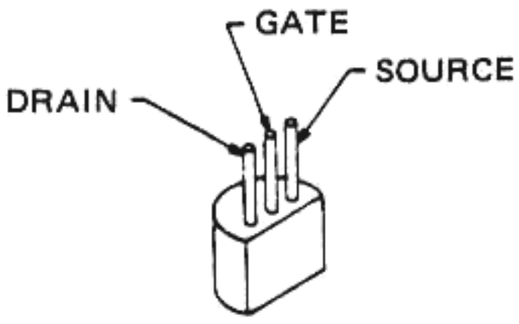

2SK107-3
2SK125

RF UNIT PARTS LAYOUT (solder

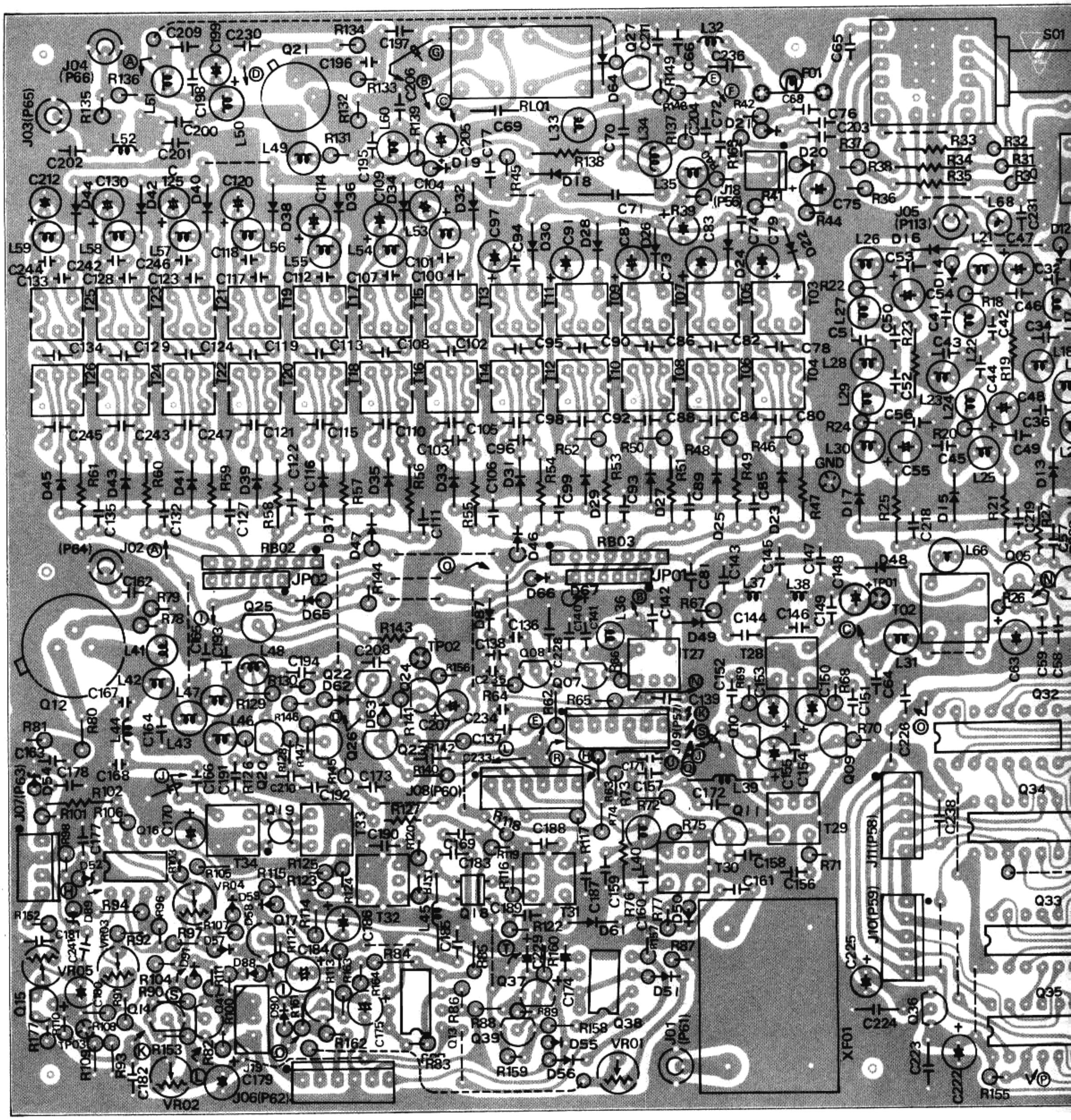

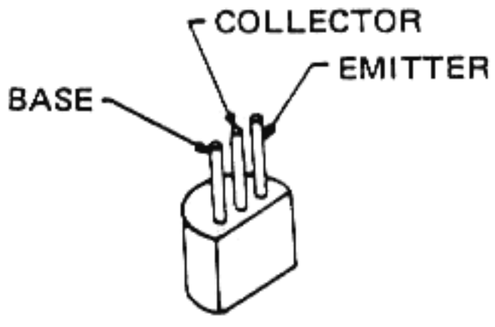

2SA733AP
2SC1815Y
2SC1815GR
2SC1959Y

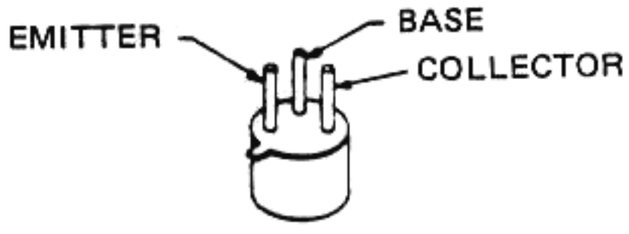

2N4427

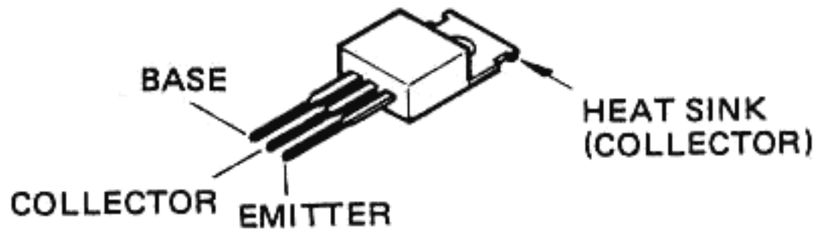

2SA1012Y

GATE
NO. 2

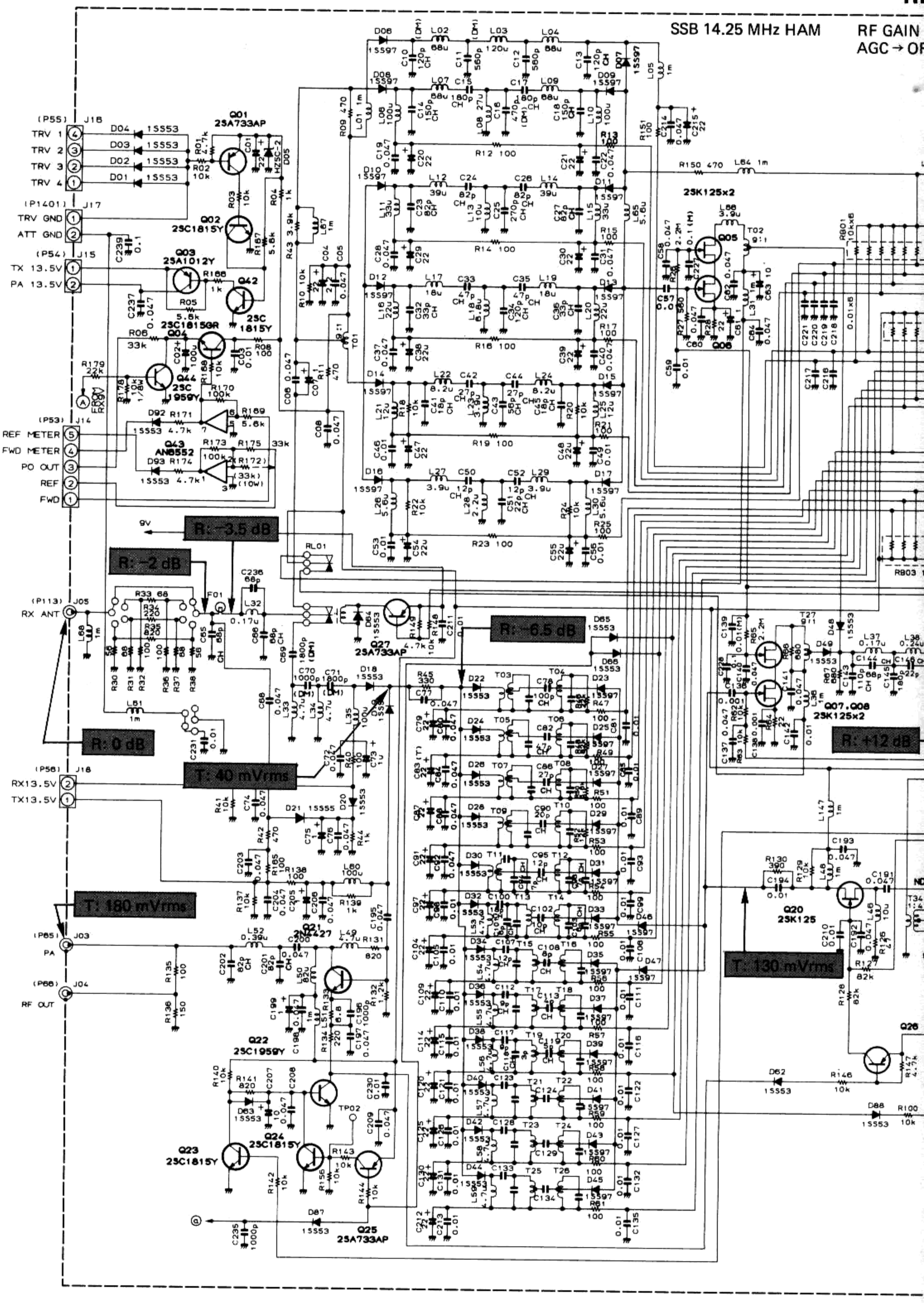
SSB 14.25 MHz HAM
RF GAIN
AGC → OF
(P55) J16
TRV 1
TRV 2
TRV 3
TRV 4
D04 1SS53
D03 1SS53
D02 1SS53
D01 1SS53
(P1401) J17
TRV GND
ATT GND
(P54) J15
TX 13.5V
PA 13.5V
(P53) J14
REF METER
FWD METER
PO OUT
REF
FWD
(P113) J05
RX ANT
(P58) J18
RX13.5V
TX13.5V
(P65) J03
PA
(P66) J04
RF OUT
Q01 2SA733AP
Q02 2SC1815Y
Q03 2SA1012Y
Q42
2SC 1815Y
Q04 2SC1815GR
Q44 2SC 1959Y
Q43 AN8552
Q27 2SA733AP
Q21 2SK427
Q22 2SC1959Y
Q23 2SC1815Y
Q24 2SC1815Y
Q25 2SA733AP
2SK125x2
Q05
Q06
Q07.Q08 2SK125x2
Q20 2SK125
Q26
R: −3.5 dB
R: −2 dB
R: −6.5 dB
R: 0 dB
R: +12 dB
T: 40 mVrms
T: 180 mVrms
T: 130 mVrms
9V
FROM RX
RL01
F01
T01
T02
T27

RF UNIT

HAM　RF GAIN → MAX　COMP → OFF　DRIVE → MIN
AGC → OFF　NB → OFF

Q31 uPA2004C　15553x7　15553x5　D84 D83 D86 D85 D82　D79 D78 D77 D76 D75 D74 D73

J13 (P51)
7 10.12m
6 15.17m
5 20m
4 30m
3 40m
2 80m
1 160m
0/13.5V

J12 (P1704)
2 GEN ← 0.7/9V
1 HAM ← 0.7/8V

J11 (P58)
1 FILT5
2 FILT4
3 FILT3
4 FILT2
5 FILT1
0/4V

J10 (P59)
5 FILT5
4 FILT4
3 FILT3
2 FILT2
1 FILT1

J01 (P61) 47.055MHz ← R: +15 dB / T: 8 mVrms

J02 (P64) LOCAL ← 170 mVrms

Q28 uPA2004C　Q29 uPA2004C　Q30 uPA2004C　15553x3　D70 D71 D72　D81 15553　D80 15553　15553x2 D69 D68

Q32 MC14028B　Q33 MC14028B　Q34 MC14081B　Q35 MC14081B

Q36 78L05

L63 1m　RB01 10kx6　C09 0.01　RA02 10kx6　C221 C220 C219 C218 0.01x6　C217 C216

RB03 10kX6　RB04 47kX9

R: +18 dB

Q09 2SK125　Q11 2SK125　Q10 2SK125　Q07.Q08 2SK125x2　R: +12 dB　TP01

XF01 47.055MHz

900 mVrms

Q12 2N4427

Q18 3SK73GR　Q19 ND487C2-3R　Q26 2SA733AP　Q13 uPC1458C　1/2 Q13　Q16 uPC1458C　1/2 Q16　Q17 2SC1815GR　Q15 2SC1815GR　Q41 2SC1815Y　Q14 2SA733AP　Q37 2SK107-3　Q38 uPC1458C　1/2 Q38　Q39 2SC1815Y　Q40 2SA733AP

J08 (P60)
6 RX 9V
5 ALC IN2
4 9V
3 13.5V
2 TX 9V
1 -9V

J09 (P57)
1 KEY
2 UNLOCK
3 RF AGC
4 SSB 9V
5 AM ALC OUT
6 AM 9V

J06 (P62)
6 PEAK HOLD
5 PEAK HOLD
4 GND
3 COMP OFF
2 ALC H
1 DRIVE VR

J07 (P63)
1 REV ALC
2 GND
3 ALC1
4 AM ALC IN

J19
3 10W
2
1 GND

RF UNIT P8-2389A (No.10xx)

14.25 MHz	RF	MIC GAIN → MAX
HAM		RF GAIN → MAX
USB		MIC IN → 1 kHz
3790		0.5 mVrms

RF UNIT VOLTAGE CHART

(DC VOLTS)

	E (S)		C (D)		B (G1)		(G2)		REMARKS
	R	T	R	T	R	T	R	T	
Q1001	5.2		0		5.2				
Q1002	0		0.7		0				
Q1003	0	13.5	0	13.5	0	13			
Q1004	0		13.5		0				
Q1005	4.2		13.5		3				GEN
Q1006	0.7		4.3		0				GEN
Q1007	4.2	7	13.5	13.5	3	3			
Q1008	0.7	0	4.3	7	0	–8			
Q1009	3.5		13.5		0				
Q1010	3.5		13.5		0				
Q1011	1.3		13.5		0				
Q1012	5.5		13.5		5.5				
Q1014	9.5		9.5		9				
Q1015	0		4.5		0				AM
Q1017	–5.5		3.5		–4.5				
	–5.5		–0.7		–4.5				AM
Q1018	1.4		13.5		1		3.5		
	0		13.5		1		–0.7		AM
Q1020	0	1.2	13.5	13	–9	0			
Q1021	7		13.5		7.5				
Q1022	0		0		0.7				
Q1023	0		1.3		0				
Q1024	0		0.7		0				
Q1025	13.5		0		13				
Q1026	–0.7	9	–9	9	–0.7	8.3			
Q1027	9.5		9.5		8.8				GEN
Q1036	IN 13.5		COM 0		OUT 5				
Q1037	0	0–3	0	0–3	0	0–1			
Q1039	–9		0		–9				
Q1040	8.2		8.1		7.5				
Q1041	0		0		0.7				
Q1042	0		0		0.7				
Q1044	0	0	0	0	0.7	–2.5			

RF UNIT VOLTAGE CHART

(DC VOLTS)

	1	2	3	4	5	6	7	8	9	10	11	12	13	14	15	16	REMARKS
Q1013	–	–	–	–9	–	–	–	9									
Q1016	–	–	–	–9	–	–	–	9									
Q1028	–	–	–	–	–	–	–	0	13	–	–	–	–	–	–	–	
Q1029	–	–	–	–	–	–	–	0	13	–	–	–	–	–	–	–	
Q1030	–	–	–	–	–	–	–	0	13	–	–	–	–	–	–	–	
Q1031	–	–	–	–	–	–	–	0	13	–	–	–	–	–	–	–	
Q1032	–	–	–	–	–	–	–	0	–	–	–	–	–	–	–	5	
Q1033	–	–	–	–	–	–	–	0	–	–	–	–	–	–	–	5	
Q1034	–	–	–	–	–	–	0	–	–	–	–	–	–	5			
Q1035	–	–	–	–	–	–	0	–	–	–	–	–	–	5			
Q1038	–	–	–	–9	–	–	–	9									
Q1043	–	–	–	–9	–	–	–	9									

IF UNIT

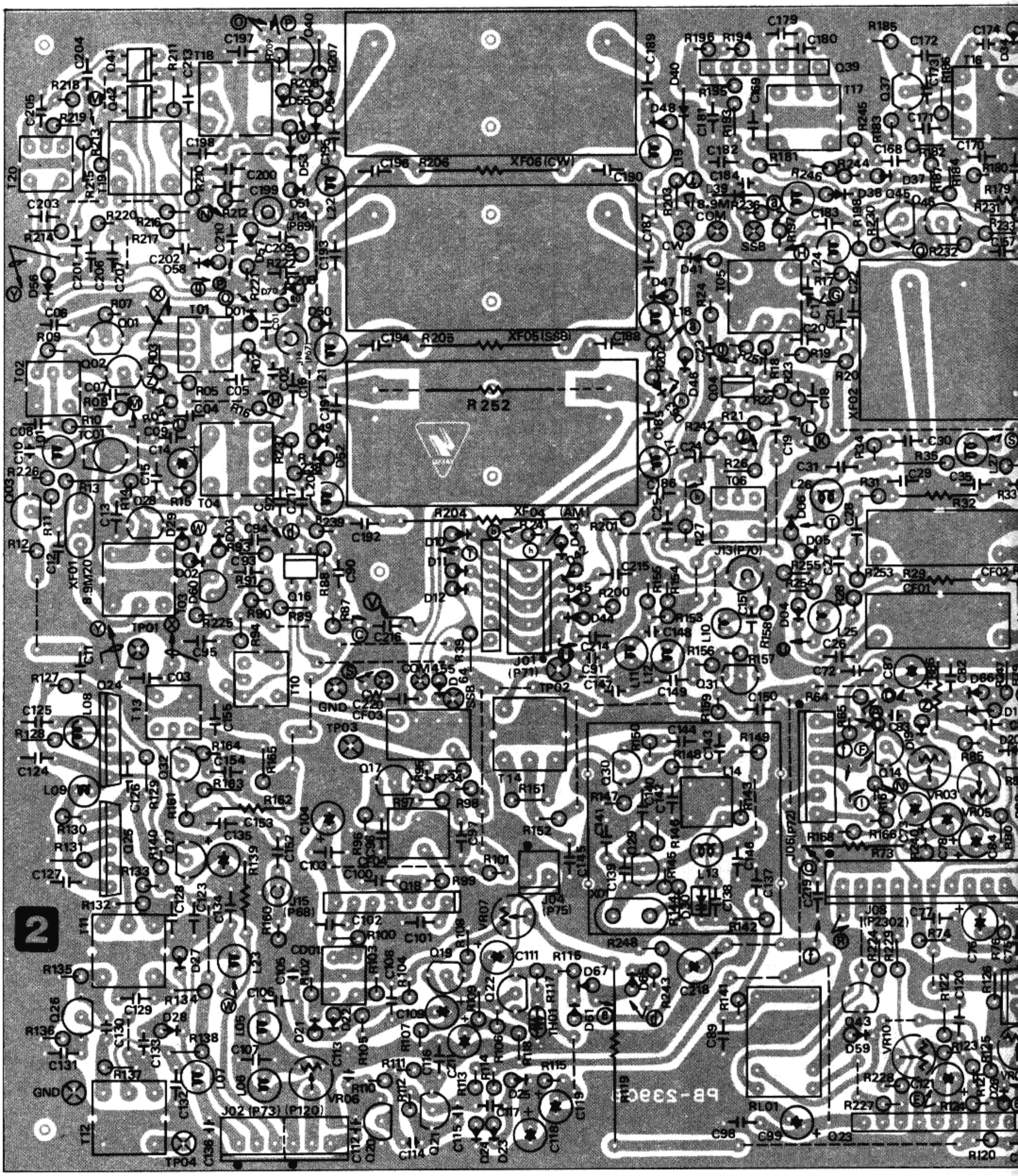

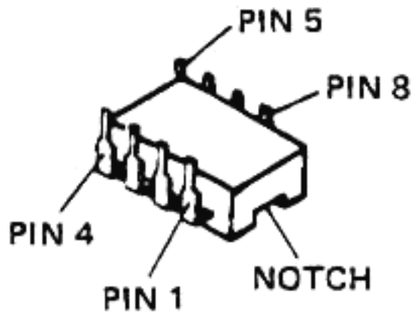

μPC1458C

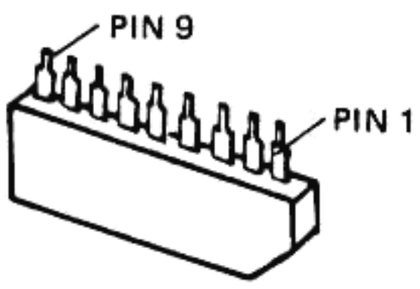

AN6551

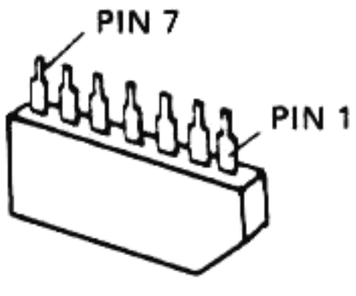

μPC577H
TA7302P

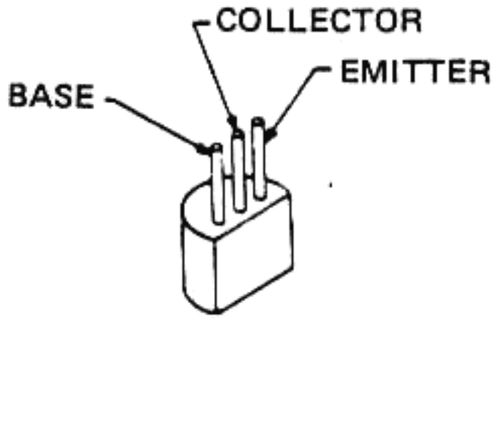

2SA733
2SB774
2SC380
2SC181
2SC181
2SC181
2SC192
2SC195

IF UNIT PARTS LAYOUT (component side)

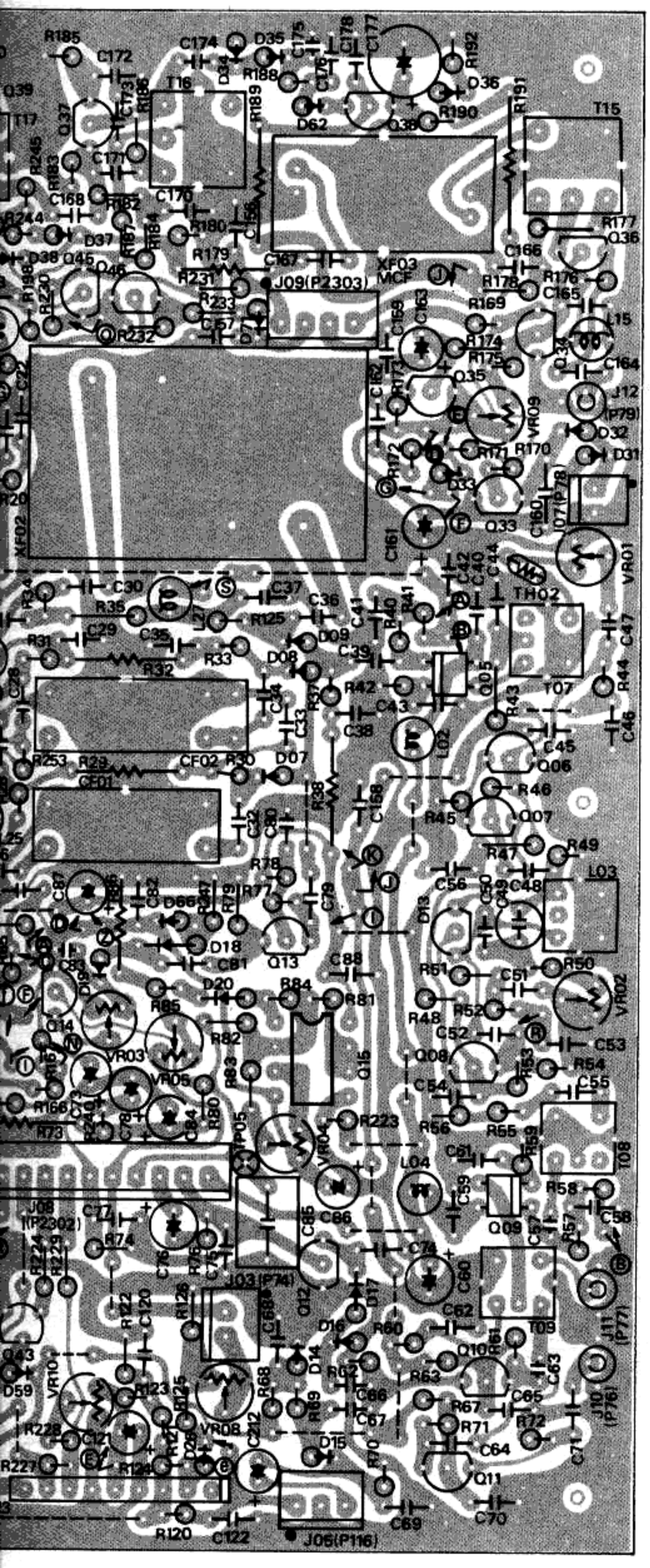

IF UNIT VOLTAGE CHART

(DC VOLTS)

	E (S)		C (D)		B (G1)		(G2)		REMARKS
	R	T	R	T	R	T	R	T	
Q2001	1.5		13		–	–	–		
Q2002	1.5		13		–	–			
Q2003	5.5		11.5		6.2				
Q2004	1.3	0	13.5	13.5	1.3	–5.5	–		
	1.3	1.3	13.5	13.5	1.3	1.3	–		MONI → ON
Q2005	1.2	0	13	13.5	1.3	–5.5	2.5	2.5	
	1.2	1.2	13	13	1.3	1.3	2.5	2.3	MONI → ON
Q2006	3.1		8.8		3.7				
Q2007	3.1		8.8		3.7				
Q2008	4.3		8.8		3.7				
Q2009	1.3	0	13	13.5	1.3	–5.5	3	3	
	1.3	1.2	13	13	1.3	1.3	3	3	MONI → ON
Q2010	5.3		11.8		6				
Q2011	5.6		11.8		6.3				
Q2012	0		2.4		0				
Q2013	–4		7.8		4.5				
Q2014	–9		3.5		–9				
Q2016	1.1	0	9	13.5	1.3	–5.5	–		MONI → OFF FM
	1.1	0.9	9	9	1.3	1.1	–		MONI → ON FM
	2.6	2.6	13.5	13.5	1.3	–5.5	–		MONI → OFF SSB
	2.6	2.6	13.5	13.5	1.3	1.1	–		MONI → ON SSB
Q2017	1.7		4		2.4				
Q2019	1.4		4.2		1.1				FM
Q2020	0		1.5		0.7				
Q2021	4.7		6.2		5.3				
Q2022	0		1.1		0.5				FM
Q2024	8.5	1	9	9	8.8	1.4			NB → ON
	–	–	9	9	8.8	1.4			NB VR→MIN
Q2025	8.5	0.8	9	9	8.8	1.4			NB → ON
	–	–	9	9	8.8	1.8			NB VR→MIN
Q2026	1.0		9.5		1.7				NB → ON
Q2027	0		9.5		0.2				NB VR→MIN
Q2028	0	0	7	0	0	0.4			NB → ON
Q2029	–		9		–				
Q2030	1.2		–		–				
Q2031	–		7.5		–				
Q2032	1.8		–		–				
Q2033	–9.5	–9.5	4.3	–0.7	–9	–9			AM GC→OFF
	–9.5	–9.5	6.4	0	–9	–9			AM GC → ON
Q2034	0	0	–9	0	4.4	–0.7			
	0	0	–9	–9	6.5	0			AM GC → ON

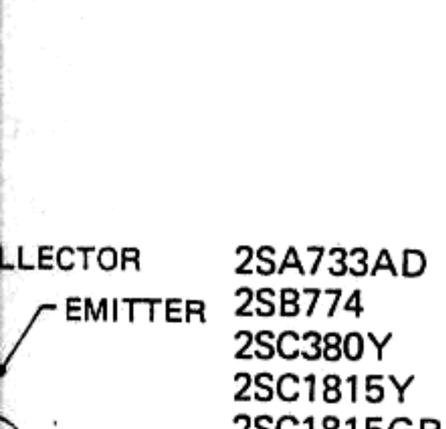

2SA733AD
2SB774
2SC380Y
2SC1815Y
2SC1815GR
2SC1815BL
2SC1923R
2SC1959Y

IF UNIT PARTS

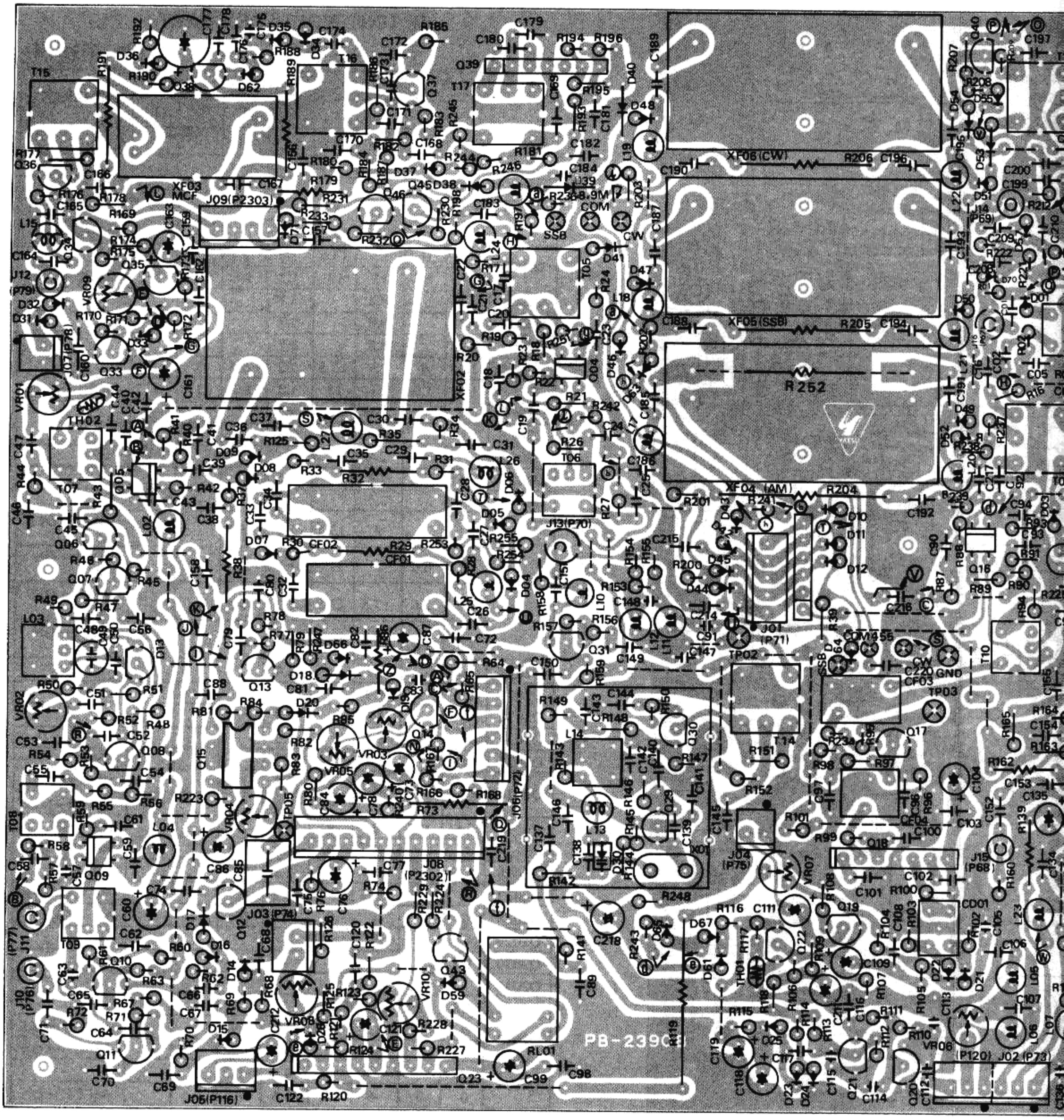

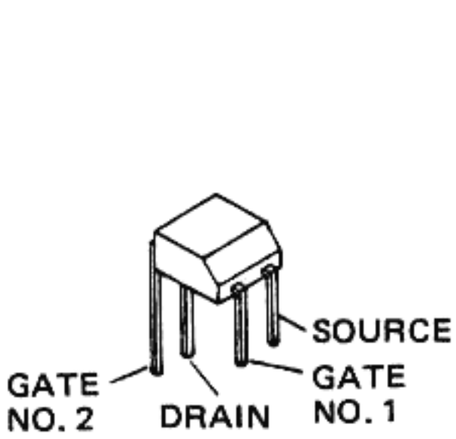

3SK73GR

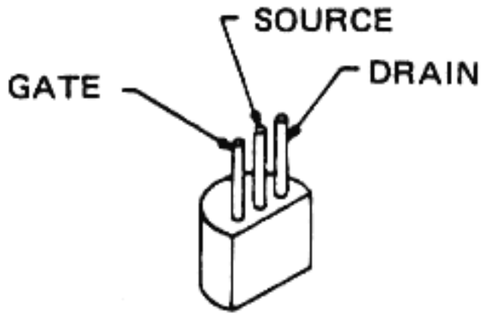

2SK19TMGR

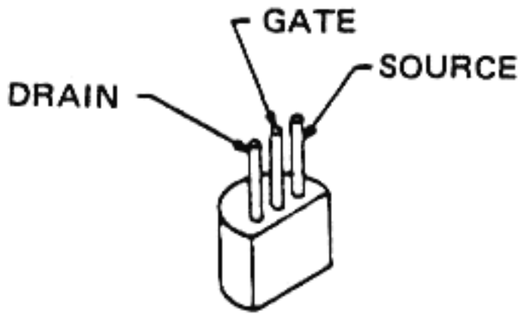

2SK125

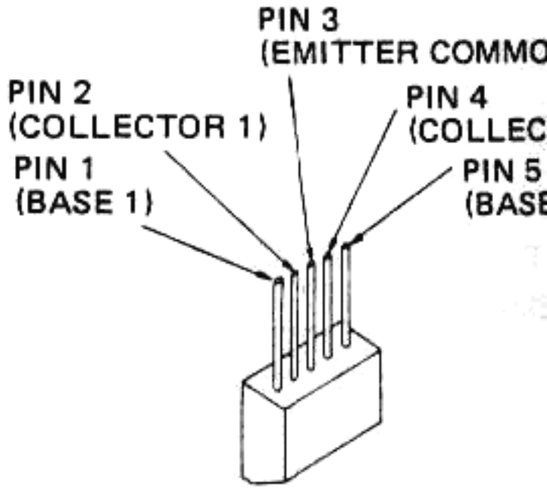

2SC1583G

IF UNIT PARTS LAYOUT (solder side)

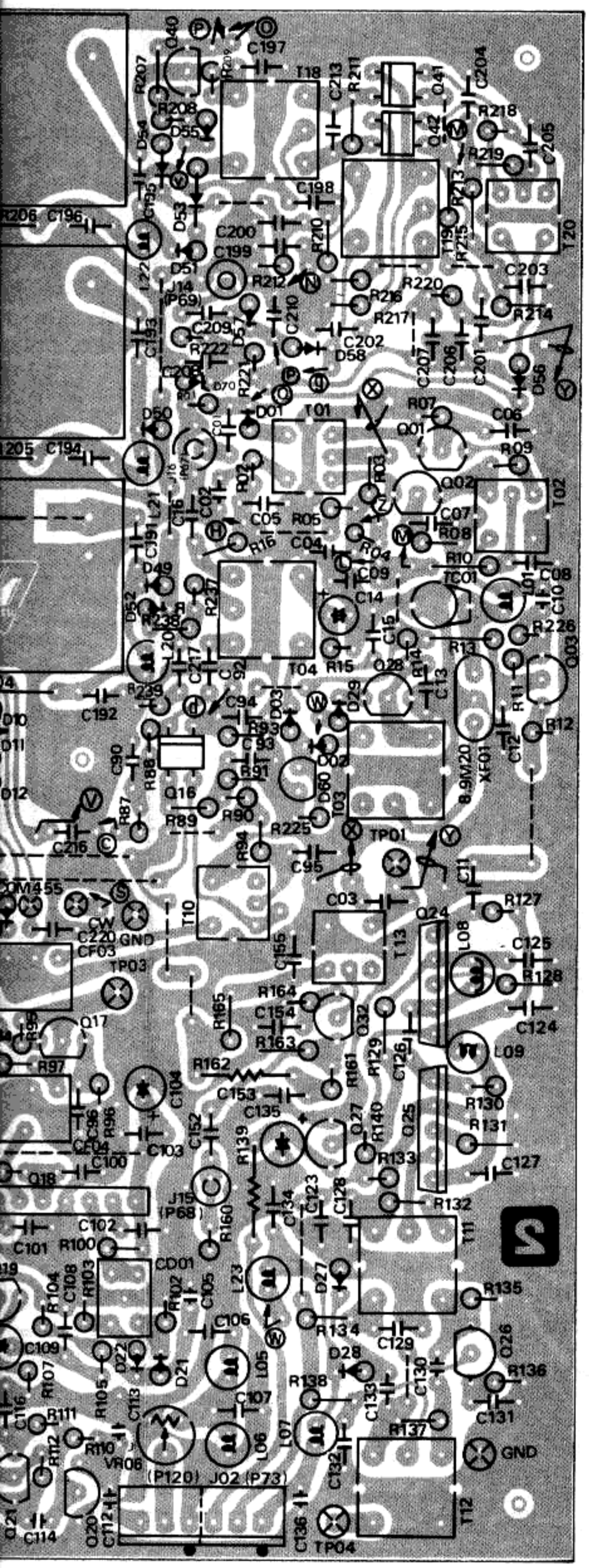
C197
R207
R208
D54
D55
C213
R211
Q41
Q42
C204
R218
R219
C205
C198
C200
C199
R212
R210
R220
R216
R217
C202
D58
C203
R214
C210
C209
D57
R222
R221
C208
C207
C206
C201
D56
D50
D01
T01
R07
Q01
C06
R09
Q02
T02
C07
R08
R10
TC01
C08
C10
C09
C14
C15
R13
R14
Q28
R15
T04
R226
Q03
R11
R12
C12
C13
D29
D03
D02
C94
C93
C90
R88
R91
D60
T03
8.9M20
XF01
Q16
R87
R89
R90
R225
TP01
C11
C95
R94
C03
R127
Q24
L08
C125
R128
C155
T13
T10
CW
C220
GND
CF03
TP03
R164
C154
R163
R165
Q32
C124
L09
R162
C153
R161
R129
C126
R130
R131
C135
Q27
R140
Q25
C152
R139
C104
C103
C127
R133
C123
C128
R132
T11
C102
R100
C101
CD01
R102
C105
L23
D27
R135
C106
R134
C129
D28
Q26
R136
R138
C133
C130
C107
C131
R137
GND
L07
L06
L05
VR06
(P120)
J02 (P73)
C132
T12
TP04
C136
C112
C114
Q20
Q21
R110
R111
R112
C116
R107
R105
C113
D22
D21
C108
R103
R104
C109
R97
Q17
C100
Q18
J15
(P68)
R160
C134
C96
R96
C104
C103
C152
R139
C135
Q27
R140
Q25
R133
C127
C123
C128
R132
T11
R135
Q26
R136
C131
GND
T12
C136
TP04
C112
C114
Q20
Q21
R110
R111
R112
C116
R107
R105
C113
D22
D21
C108
R103
R104
C109
R97
Q17
C100
Q18
J15
(P68)
R160
C134
C102
R100
C101
CD01
R102
C105
L23
D27
R135
C106
R134
C129
D28
Q26
R136
R138
C133
C130
C107
C131
R137
GND
L07
L06
L05
VR06
(P120)
J02 (P73)
C132
T12
TP04
C136

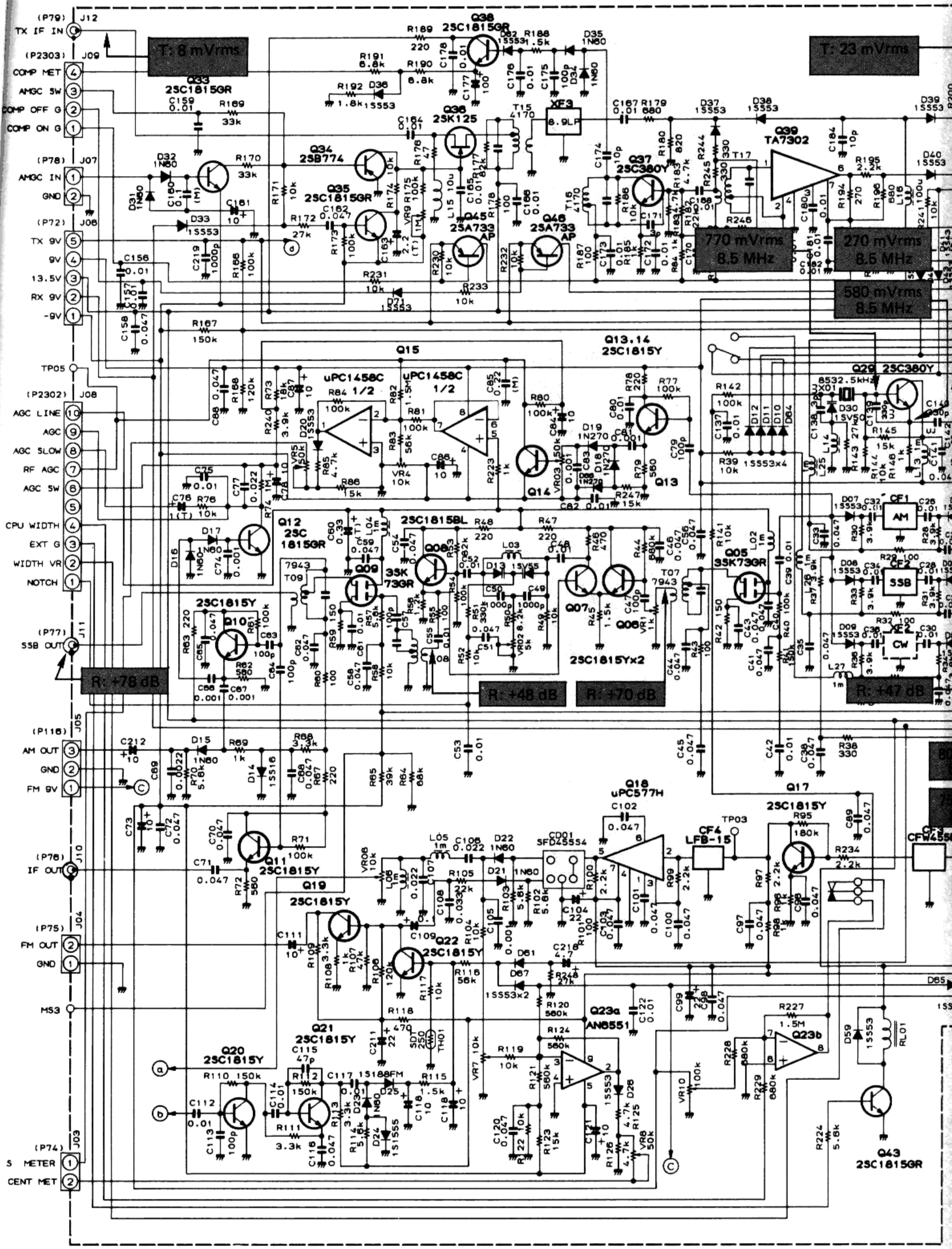
T: 8 mVrms
T: 23 mVrms
770 mVrms 8.5 MHz
270 mVrms 8.5 MHz
580 mVrms 8.5 MHz
R: +78 dB
R: +48 dB
R: +70 dB
R: +47 dB
2SC1815Y×2
Q38 2SC1815GR
Q33 2SC1815GR
Q34 2SB774
Q35 2SC1815GR
Q36 2SK125
Q37 2SC380Y
Q39 TA7302
Q45 2SA733 AP
Q46 2SA733 AP
Q15
uPC1458C 1/2
uPC1458C 1/2
Q13.14 2SC1815Y
Q29 2SC380Y
8532.5kHz
Q14
Q13
Q12 2SC 1815GR
2SC1815BL
Q08
Q09 3SK 73GR
Q10 2SC1815Y
Q07
Q06
Q05 3SK73GR
Q11 2SC1815Y
Q19 2SC1815Y
Q22 2SC1815Y
Q18 uPC577H
Q17 2SC1815Y
Q20 2SC1815Y
Q21 2SC1815Y
Q23a AN6551
Q23b
Q43 2SC1815GR
CF1 AM
CF2 SSB
CF3 CFW455E
CF4 LFB-15
J12 TX IF IN
J09 (P2303) COMP MET, AMGC SW, COMP OFF G, COMP ON G
J07 (P78) AMGC IN, GND
J08 (P72) TX 9V, 9V, 13.5V, RX 9V, -9V
J11 (P77) SSB OUT
J08 (P2302) AGC LINE, AGC, AGC SLOW, RF AGC, AGC SW, CPU WIDTH, EXT G, WIDTH VR, NOTCH
J05 (P116) AM OUT, GND, FM 9V
J10 (P76) IF OUT
J04 (P75) FM OUT, GND, MS3
J03 (P74) S METER, CENT MET
TP05
TP03

IF UNIT

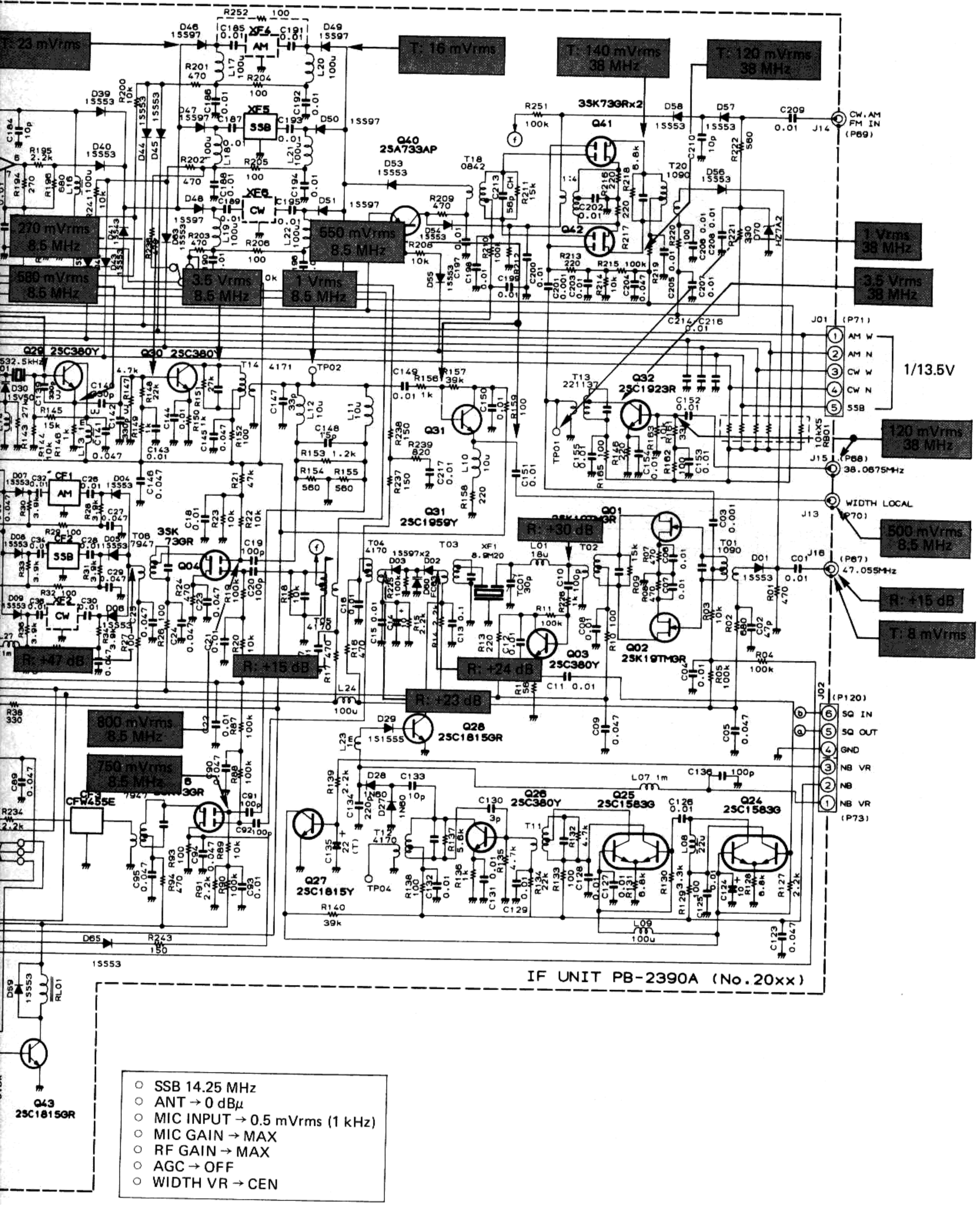

- SSB 14.25 MHz
- ANT → 0 dBμ
- MIC INPUT → 0.5 mVrms (1 kHz)
- MIC GAIN → MAX
- RF GAIN → MAX
- AGC → OFF
- WIDTH VR → CEN

IF UNIT PB-2390A (No.20xx)

AF UNIT F

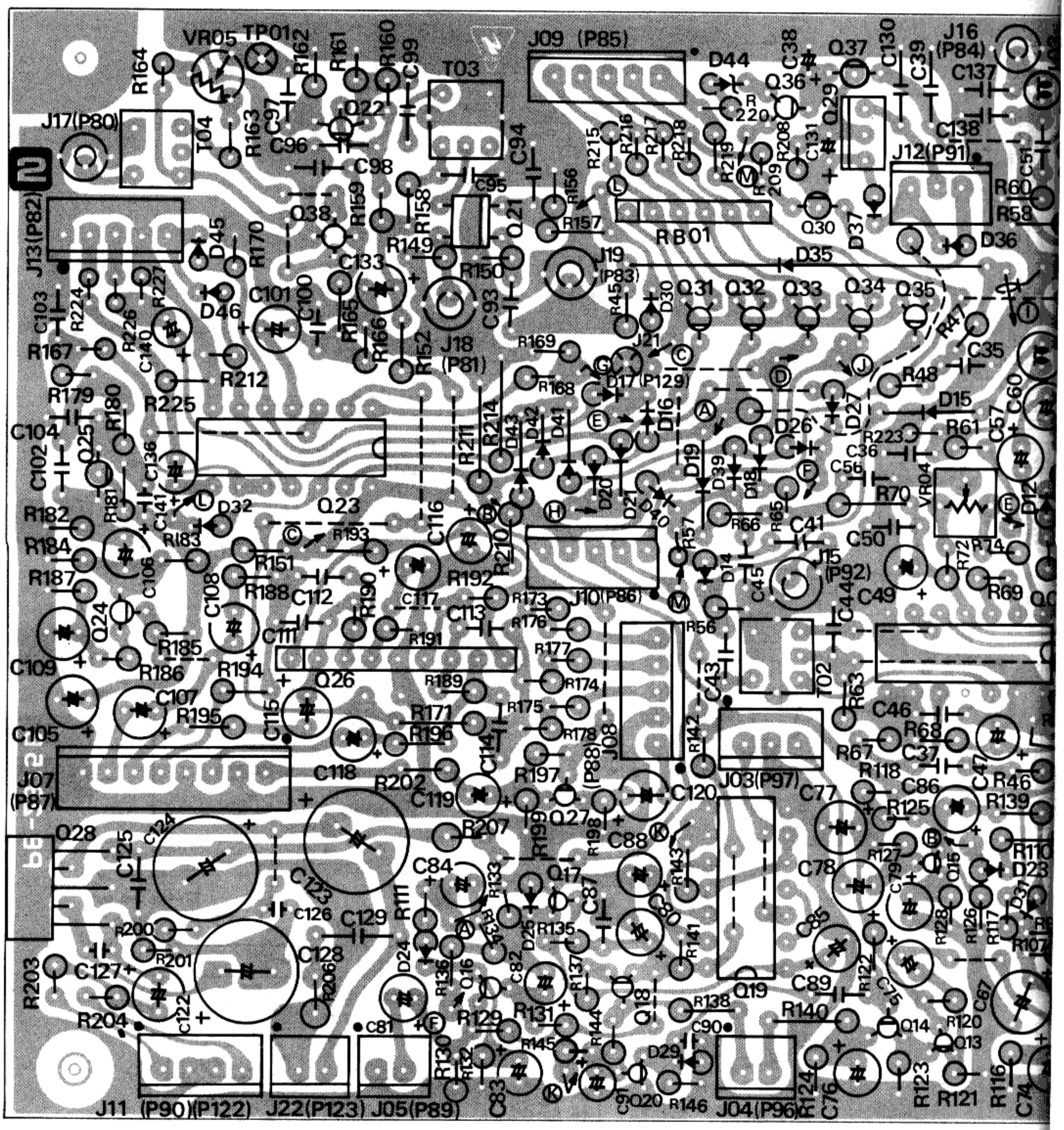

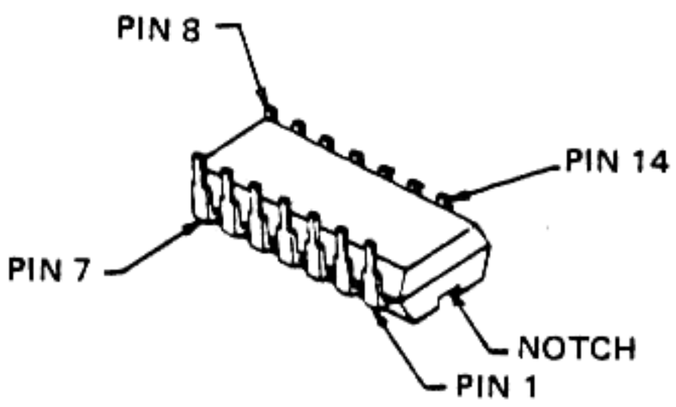

MC1496P
MC14011B
MC14066B

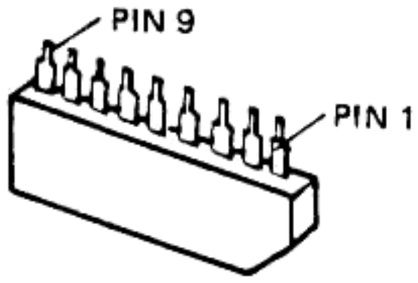

AN6551

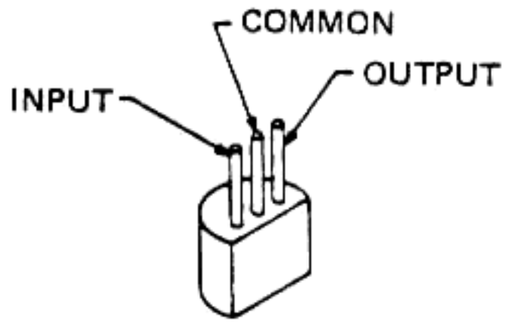

μPC78L05
NJM78L09A



AF UNIT PARTS LAYOUT (component side)

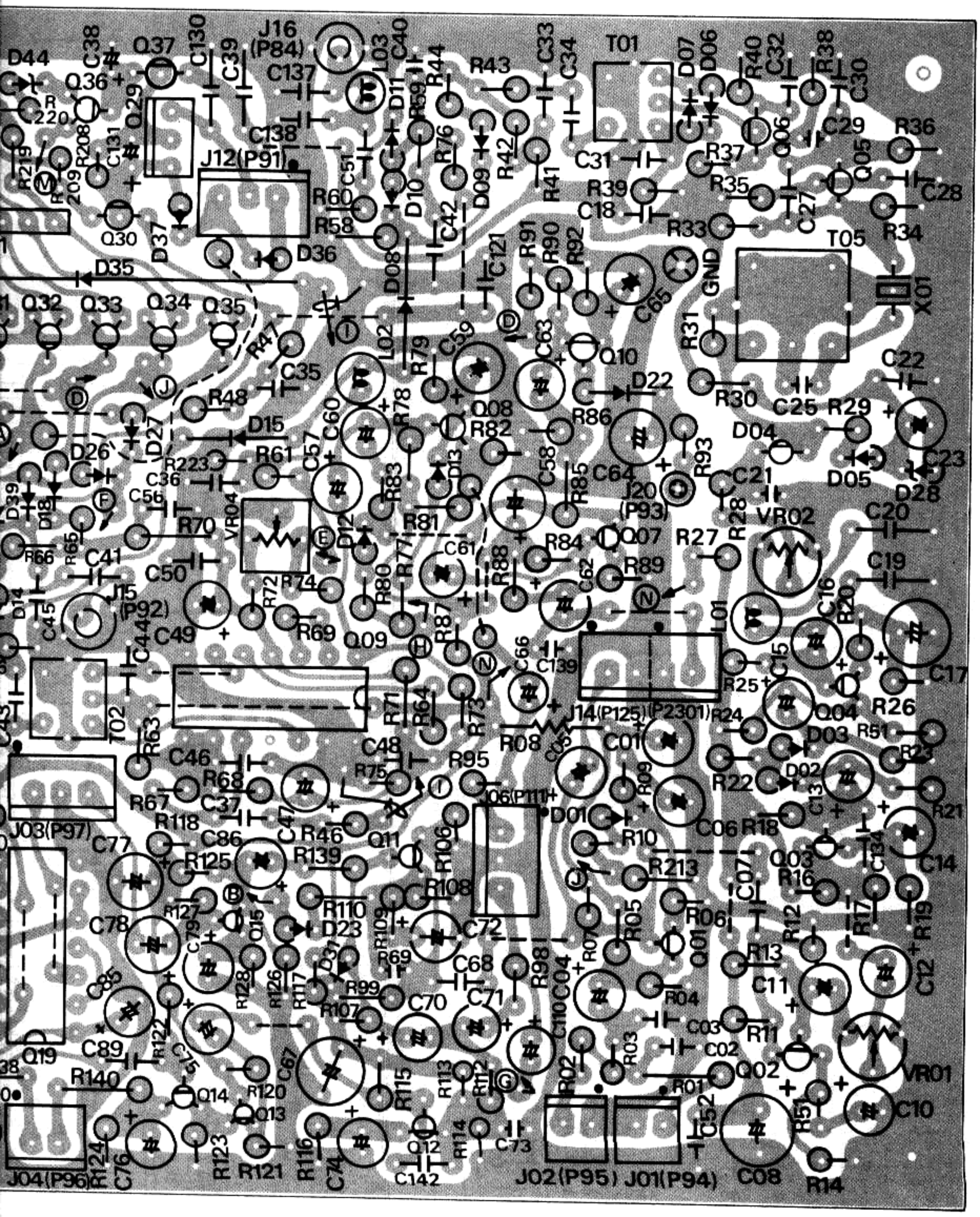

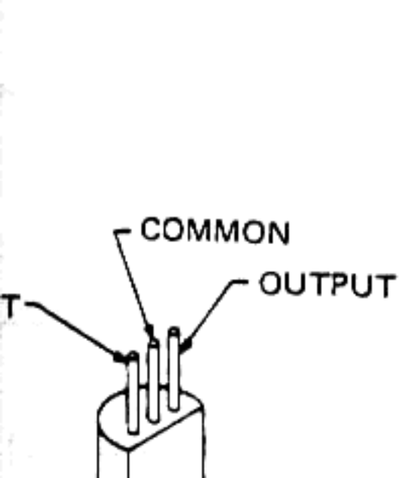

μPC78L05
NJM78L09A

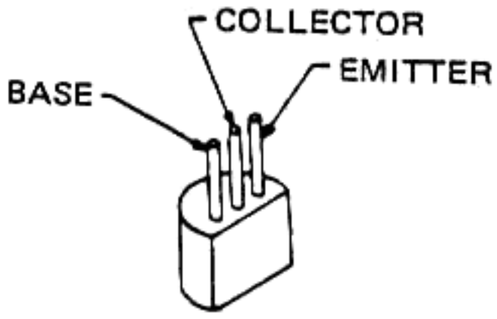

2SA564AR
2SA733P
2SA950Y
2SB774
2SC732GR
2SC945P
2SC1815Y
2SC1815GR

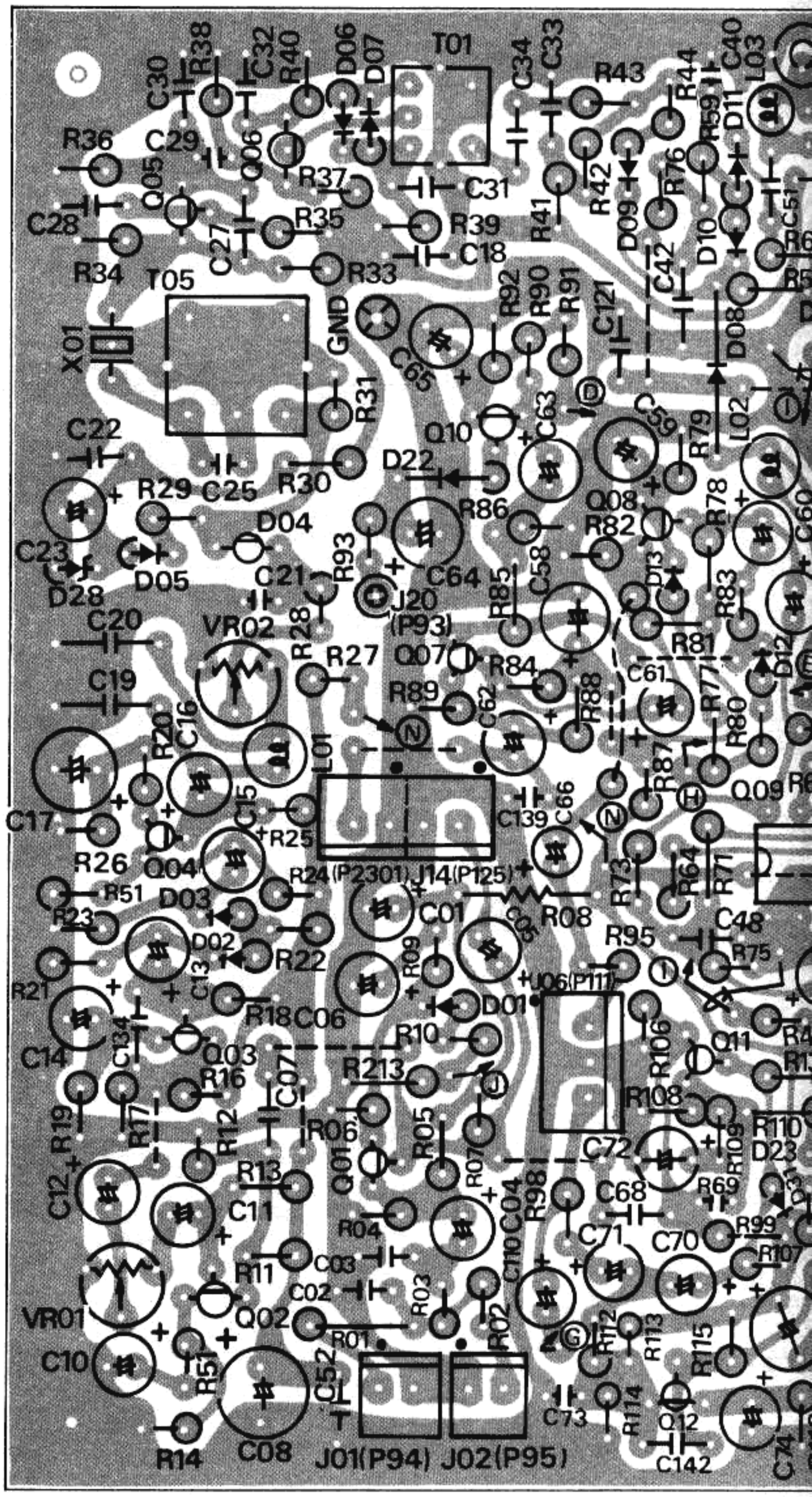

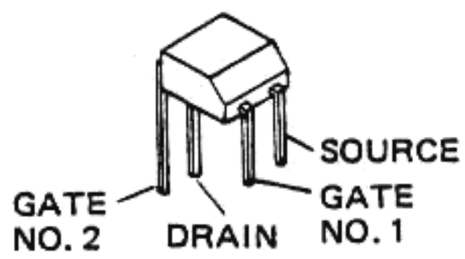

3SK73GR

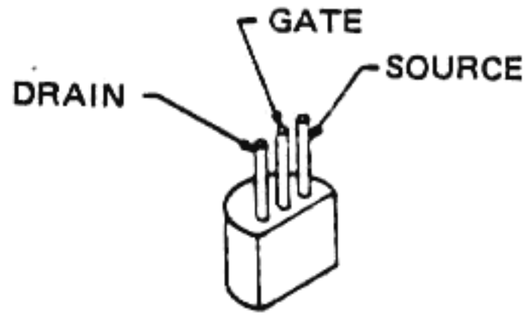

2SK107-3

AF UNIT PARTS LAYOUT (solder side)

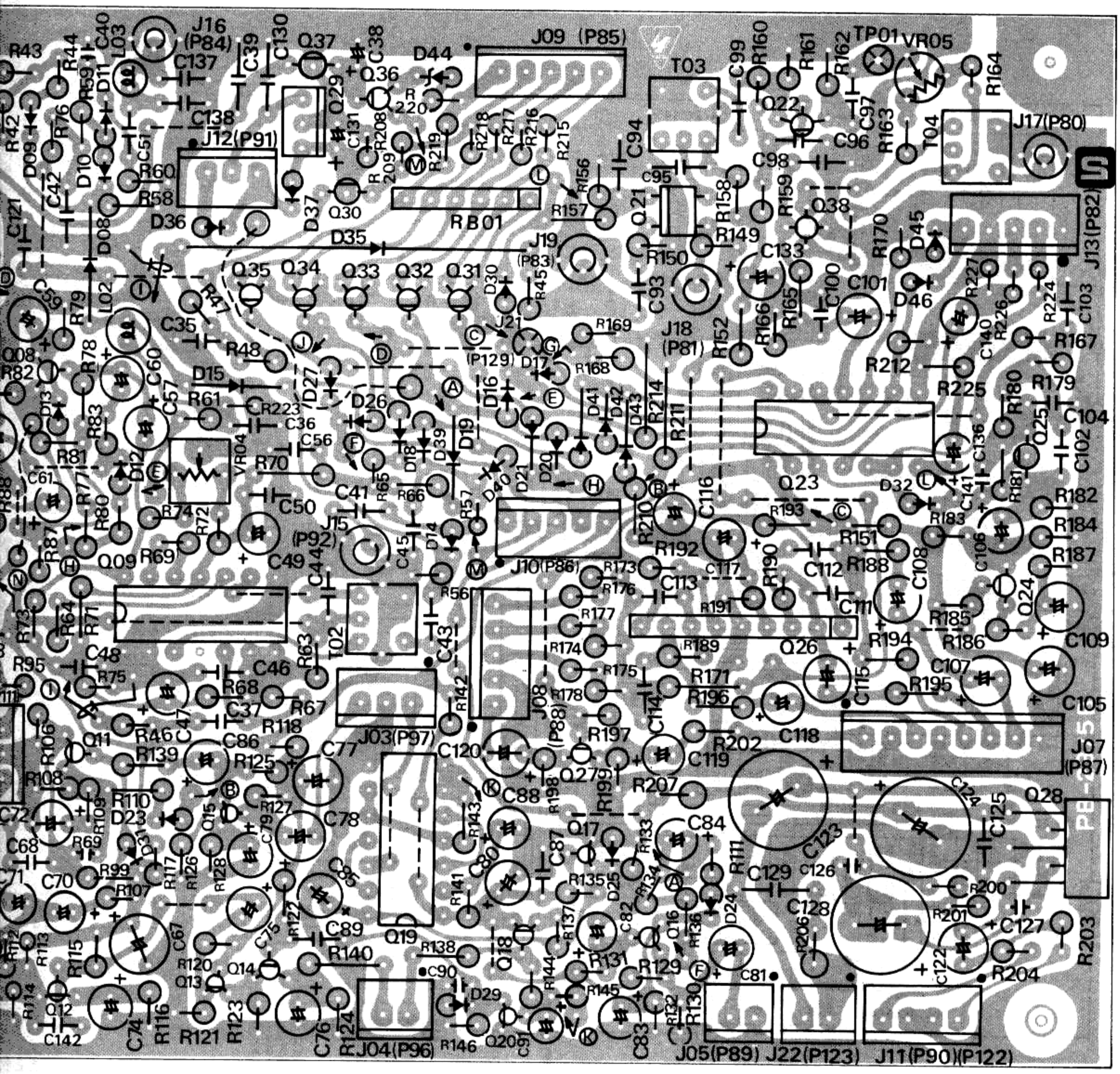

ATE
SOURCE

7-3

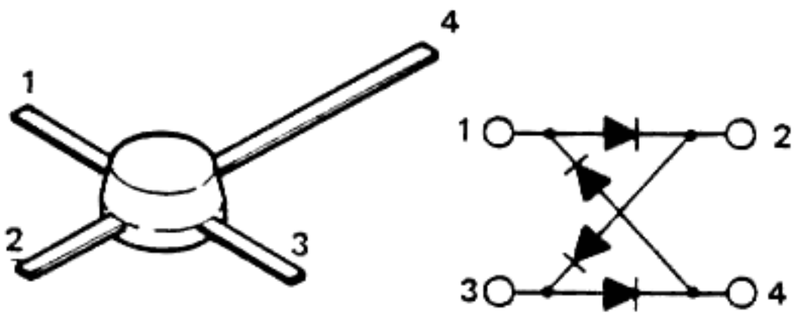

ND487R1-3R

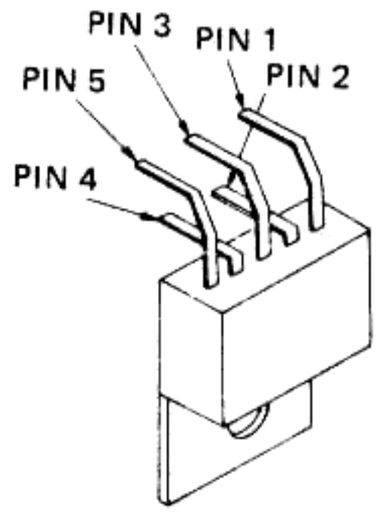

μPC2002V

AF UNIT

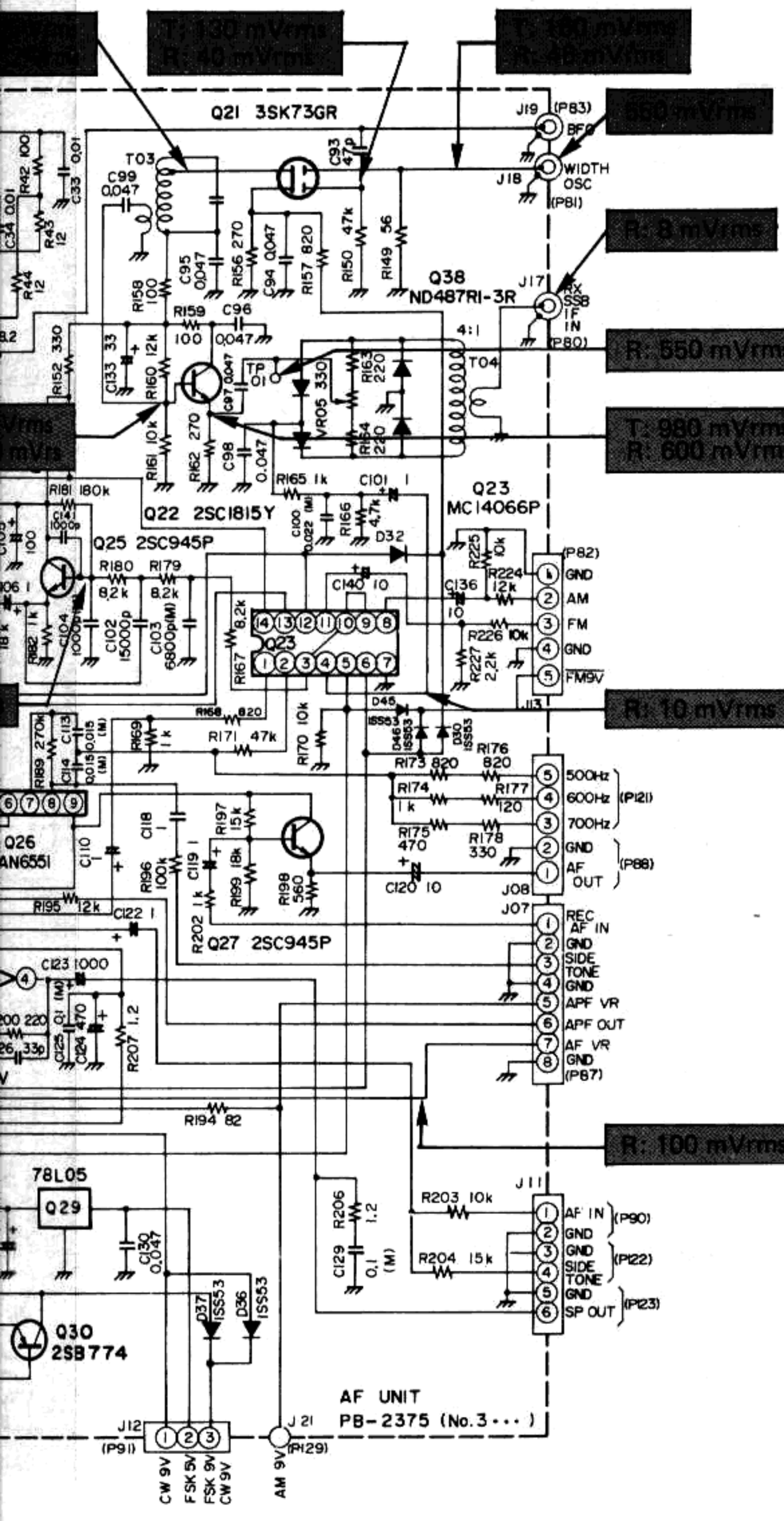

AF UNIT VOLTAGE CHART

(DC VOLTS)

	E (S)		C (D)		B (G1)		(G2)		REMARKS	
	R	T	R	T	R	T	R	T		
Q3001	3.8		5		2.5					
	5.5		9		2.6				FSK	
Q3002	1.5		3.1		2.1					
Q3003	1.3		5		2.1					
Q3004	1.2		3.9		1.8					
Q3005	0	–	0	8.6	0	–			FM	
Q3006	0	1.7	0	–	0	–			FM	
Q3007	1.4		5.3		2					
	6.5		9		2.2				CW, FM	
Q3008	1.5		3		2					
	4.4		9		2.2				CW, FM	
Q3010	4.4		4.4		0				AM	
Q3011	1.2		4.6		1.8					
	4.5		7		2				CW	
Q3012	1.2		4.3		1.7					
Q3013	5.2		8.7		2.7				SSB	VOX VR → MIN BREAK IN
	6.3		8.7		2.7				CW	
Q3014	5.2		6.4		5.8				SSB	VOX VR → MIN BREAK IN
	6.2		6.2		6.5				CW	
Q3015	2.6		5.1		3.2					
Q3016	1		6.9		1.6					
	4		9		1.6				CW	
Q3017	0		9		0					
	0		0		0.7				FM, FSK	
Q3018	9		9		9					VOX DELAY VR → MIN
	8.8		8.8		8				FM, FSK	
Q3020	0		9		0					VOX DELAY VR → MIN
	0		8.8		0				FM, FSK	
Q3021	0.3		–		–		–			
	2		–		–		–		AM, FM	
Q3022	–	–	5.8	5.4	–	–				
Q3024	1.1		3.6		1.7					
Q3025	4.1		6.9		4.7					
Q3027	3.7		8.5		4.3					
Q3029	IN 9		COM 0		OUT 5					
Q3031	9		9		8.4				SSB	
Q3032	9		9		8.4				CW	
Q3033	9		9		8.4				AM	
Q3034	9		9		8.4				FSK	
Q3035	9		9		8.4				FM	
Q3036	0.4	13	0	13.5	0	0			FM	
Q3037	IN 13		COM 0		OUT 5				FM TX	

AF UNIT VOLTAGE CHART

(DC VOLTS)

	1	2	3	4	5	6	7	8	9	10	11	12	13	14	REMARKS
Q3009	3	–	–	3	1.1	9	–	5.8	–	5.8	–	–	–	0	
Q3019	9	0	9	0	9	9	0	8.4	8.4	0	9	0	8	9	
Q3023	–	–	–	–	8	0	0	–	–	–	–	0	–	9	
Q3026	8	–	–	4.4	0	4.4	–	–	8						
Q3028	–	–	0	–	13.5										

AF UNIT

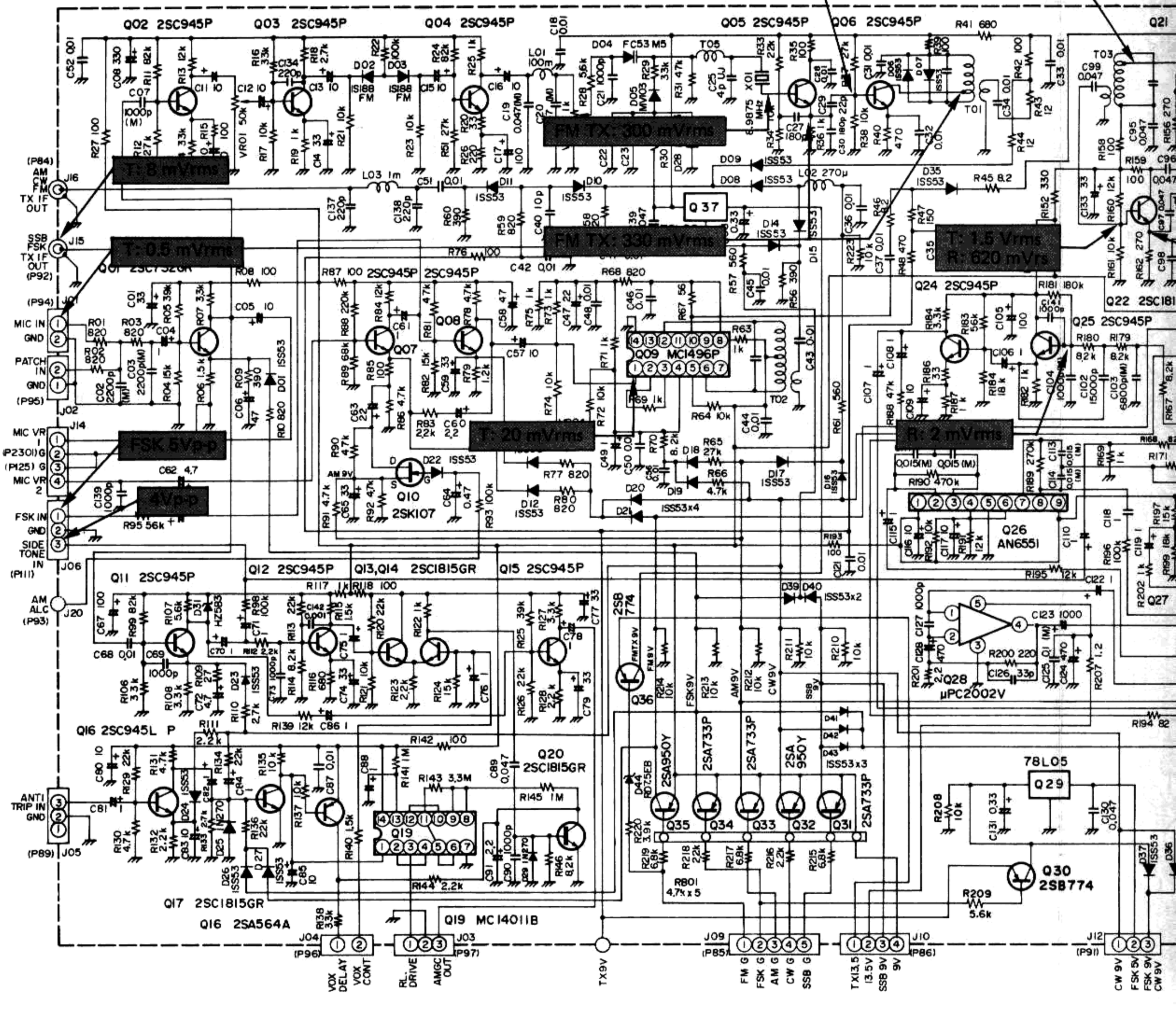
Q02 2SC945P
Q03 2SC945P
Q04 2SC945P
Q05 2SC945P
Q06 2SC945P
Q21
FM TX: 300 mVrms
T: 8 mVrms
FM TX: 330 mVrms
T: 0.5 mVrms
T: 1.5 Vrms
R: 620 mVrs
T: 20 mVrms
R: 2 mVrms
FSK 5Vp-p
4Vp-p
Q37
Q07
Q08
Q09 MC1496P
Q10 2SK107
Q24 2SC945P
Q22 2SC181
Q25 2SC945P
Q26 AN6551
Q27
Q28 μPC2002V
Q11 2SC945P
Q12 2SC945P
Q13,Q14 2SC1815GR
Q15 2SC945P
Q16 2SC945L P
Q16 2SA564A
Q17 2SC1815GR
Q19 MC14011B
Q20 2SC1815GR
Q36 2SB774
Q35 2SA950Y
Q34 2SA733P
Q33 2SA733P
Q32 2SA950Y
Q31 2SA733P
78L05 Q29
Q30 2SB774
(P84) AM CW FM TX IF OUT J16
SSB FSK TX IF OUT (P92) J15
(P94) J01
MIC IN
GND
PATCH IN
GND
(P95) J02
MIC VR 1
(P2301) G
(P125) G
MIC VR 2
FSK IN
GND
SIDE TONE IN
(P111) J06
AM ALC (P93) J20
ANTI TRIP IN
GND
(P89) J05
J04 (P96)
J03 (P97)
J09 (P85)
J10 (P86)
J12 (P91)
VOX DELAY
VOX CONT
RL DRIVE
AMGC OUT
TX9V
FM G
FSK G
AM G
CW G
SSB G
TX13.5
13.5V
SSB 9V
9V
CW 9V
FSK 5V
FSK 9V
CW 9V

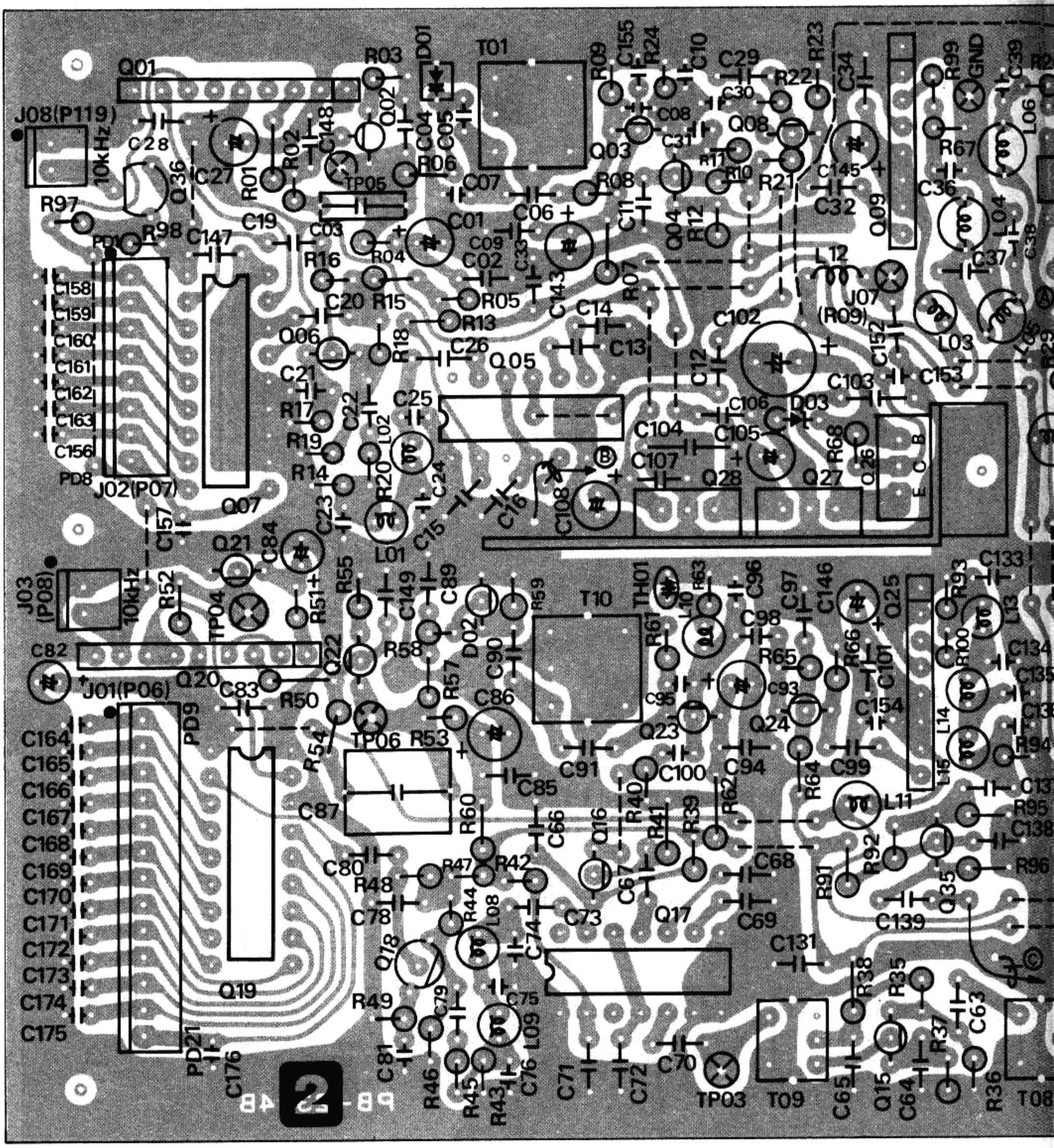

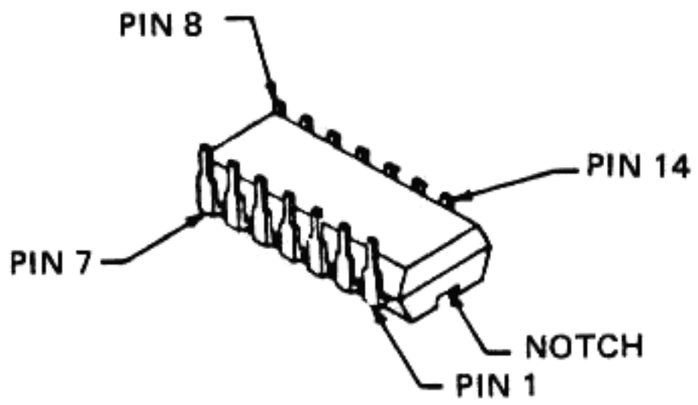

SN76154N
SN74LS90

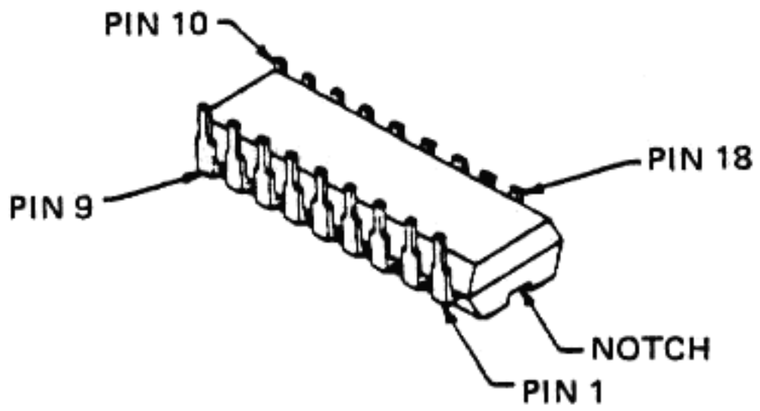

TC9122P

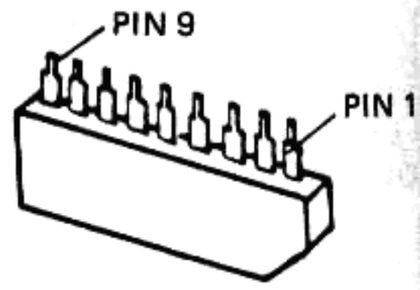

TC5081P

VFO UNIT PARTS LAYOUT (component side)

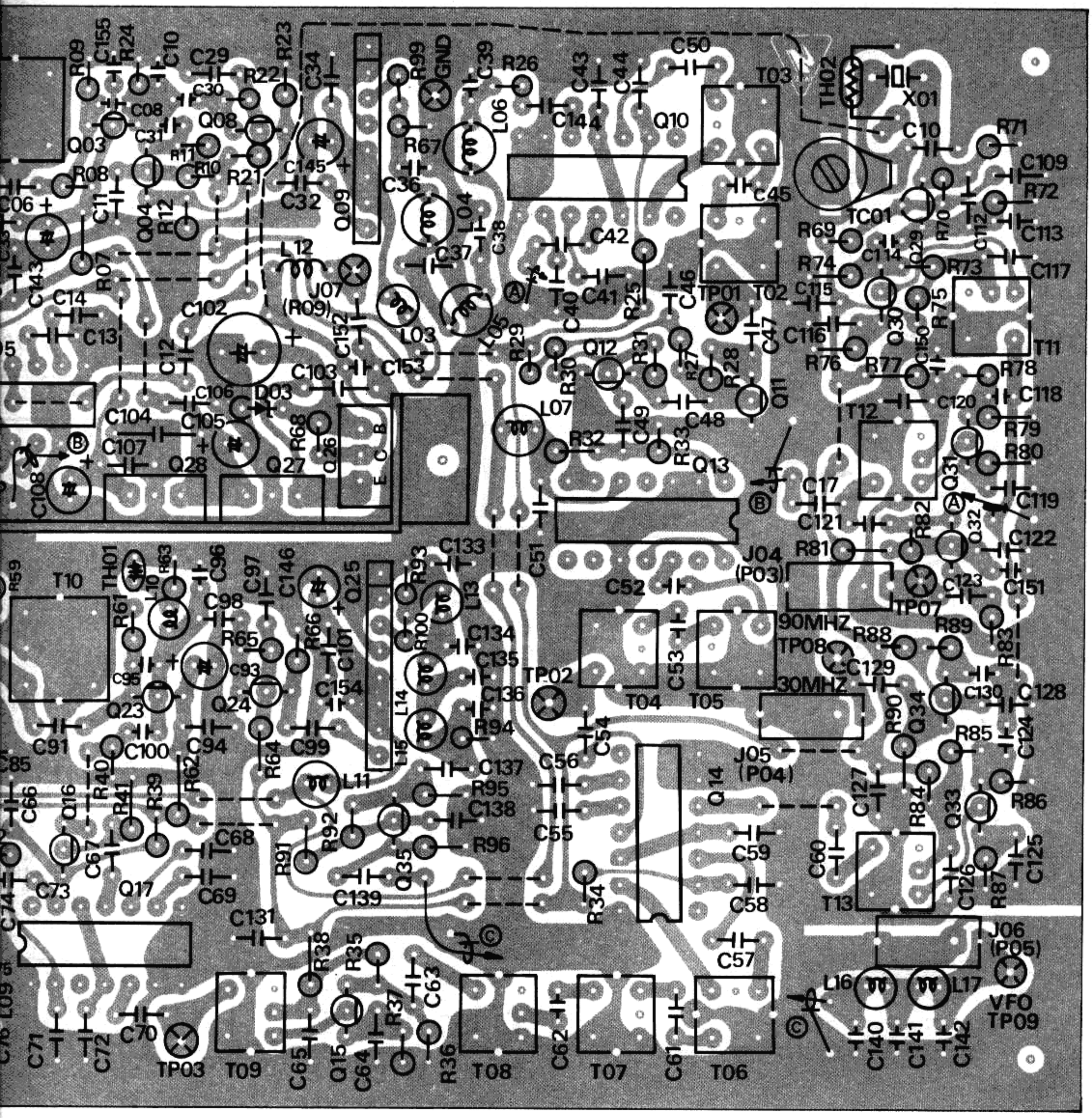

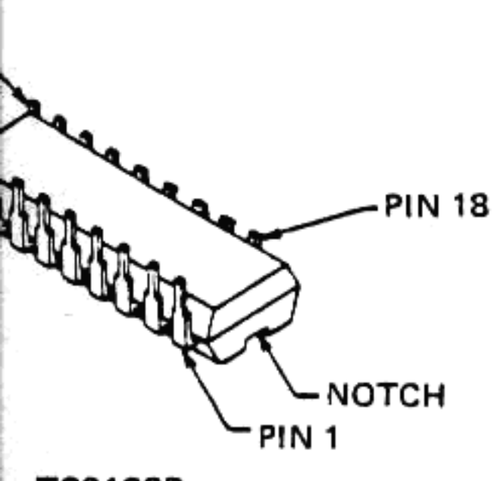

TC9122P

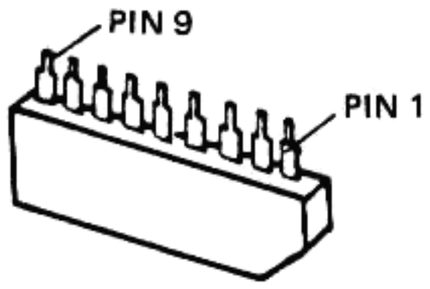

TC5081P

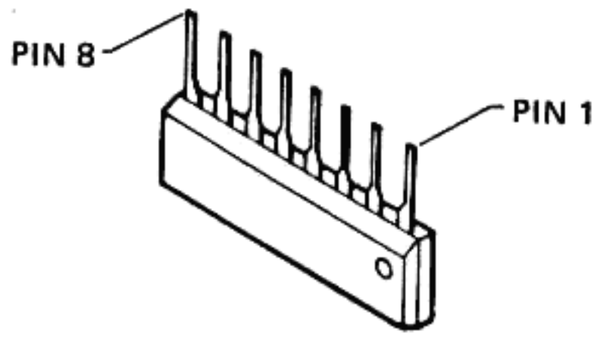

HD10551

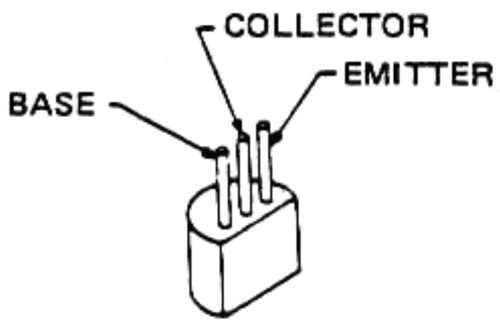

2SA733P
2SC535A
2SC1815Y

ARTS LAYOUT (solder side)

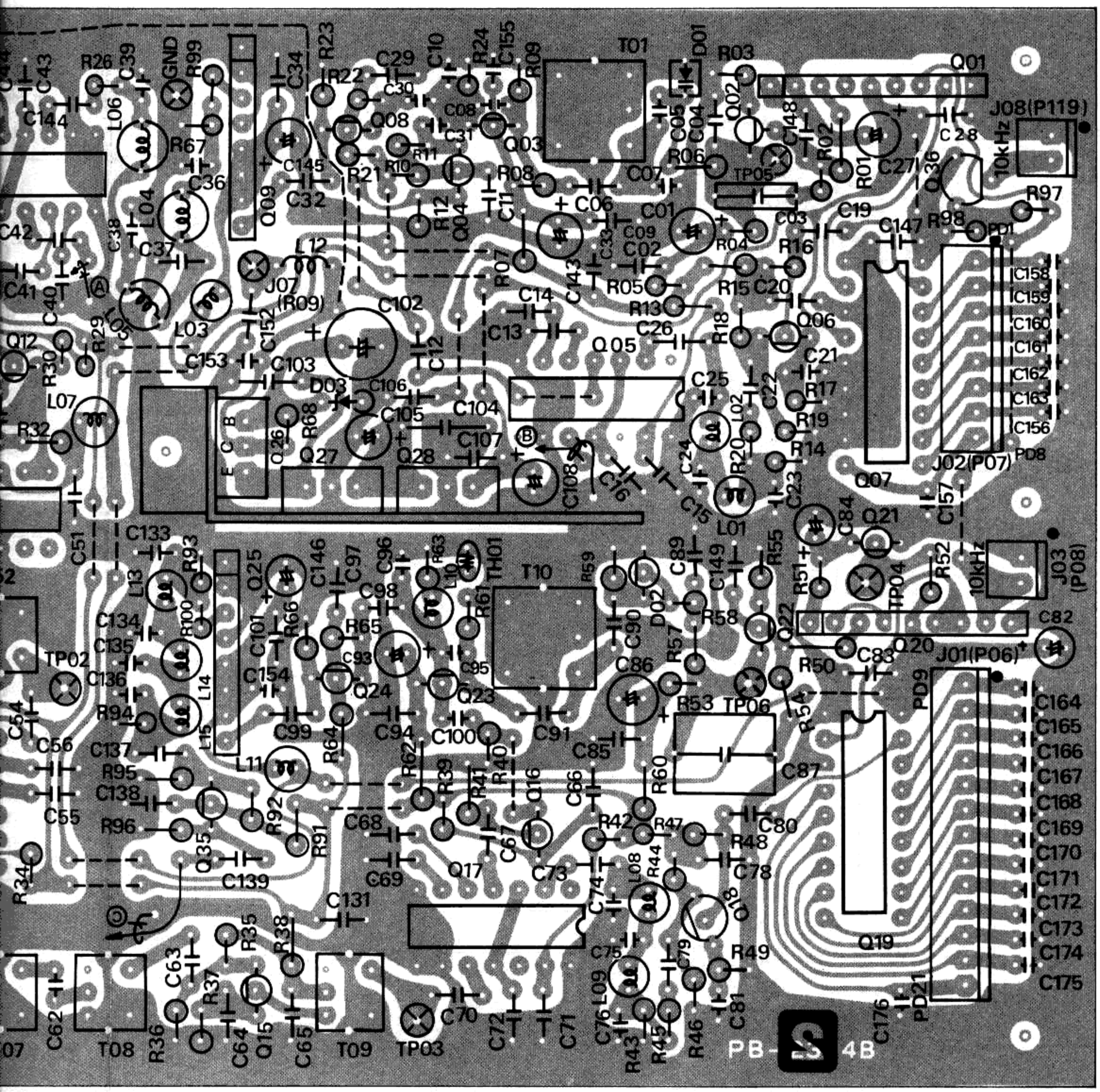

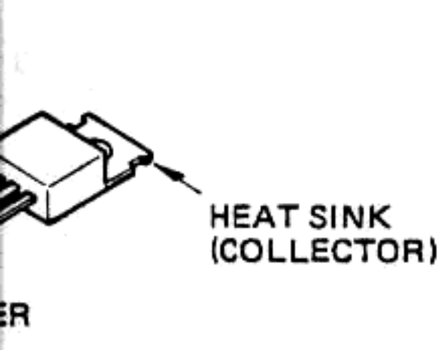

ER

80Y

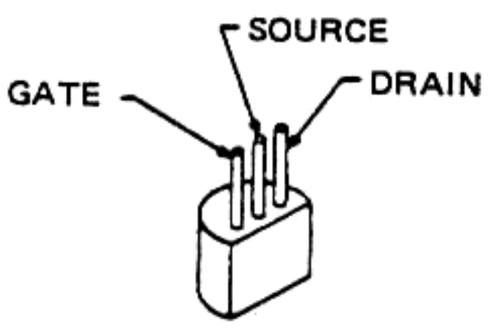

2SK19TM-GR

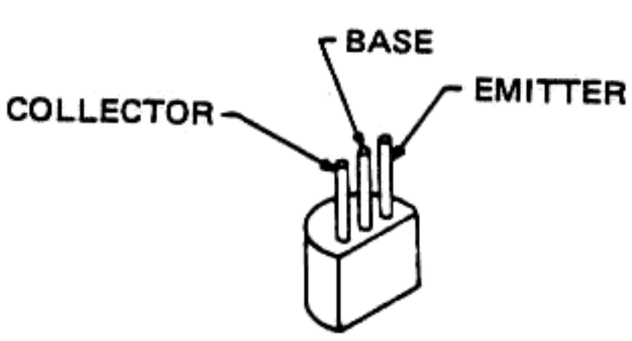

MPSA13

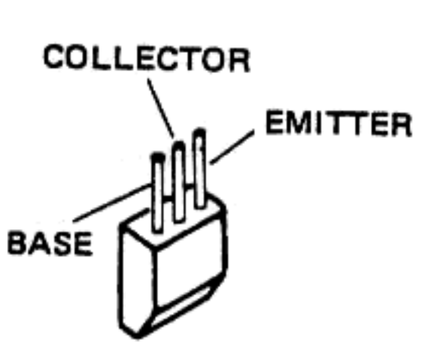

2SC535A

VFO UNIT PARTS LAYOUT (solder side)

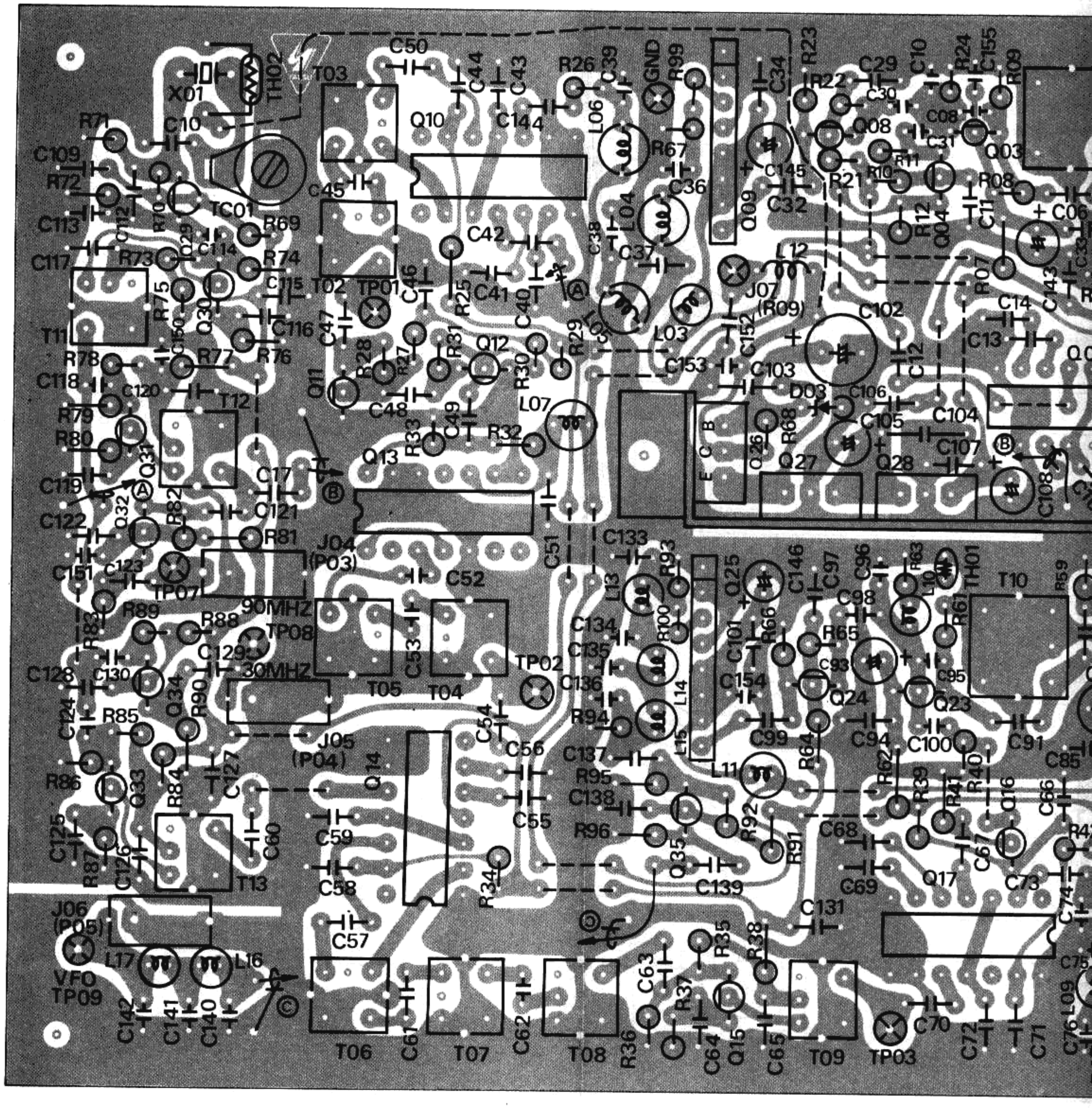

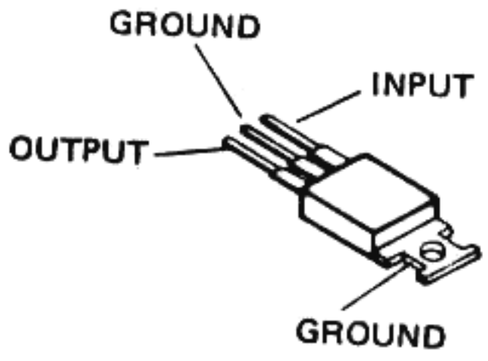

μPC7805
μPC7808

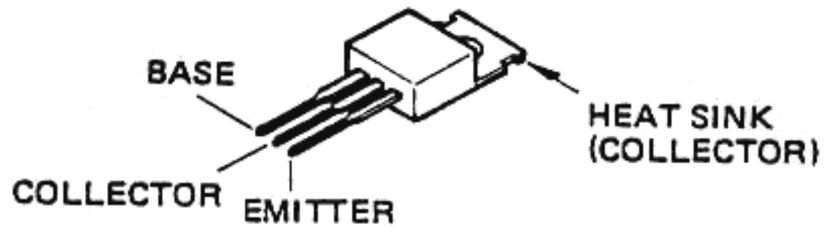

2SD880Y

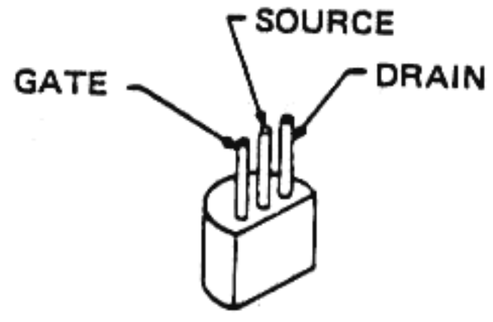

2SK19TM-GR

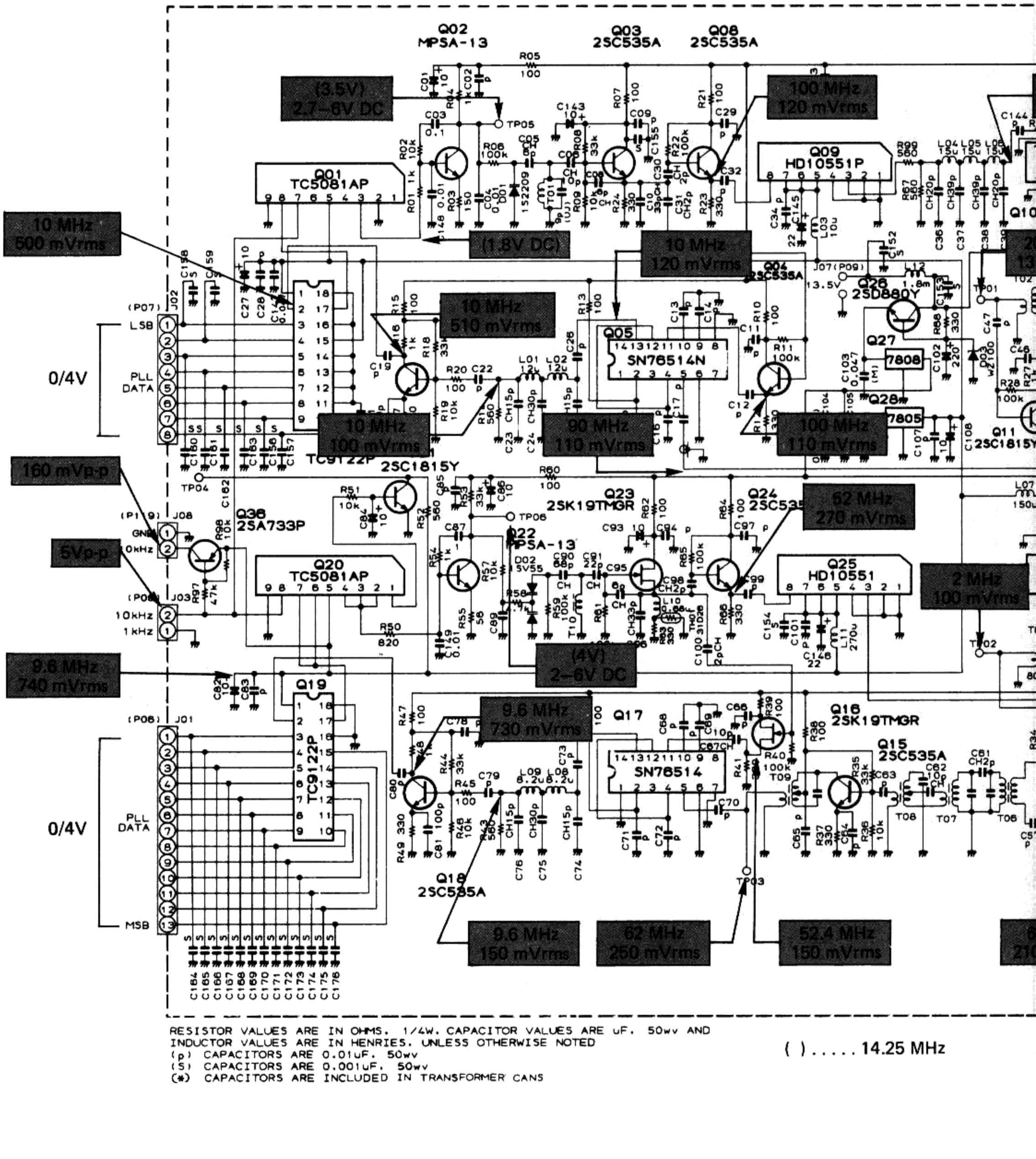

RESISTOR VALUES ARE IN OHMS. 1/4W. CAPACITOR VALUES ARE uF. 50wv AND
INDUCTOR VALUES ARE IN HENRIES. UNLESS OTHERWISE NOTED
(p) CAPACITORS ARE 0.01uF. 50wv
(S) CAPACITORS ARE 0.001uF. 50wv
(*) CAPACITORS ARE INCLUDED IN TRANSFORMER CANS

( ) . . . . . 14.25 MHz

VFO UNIT

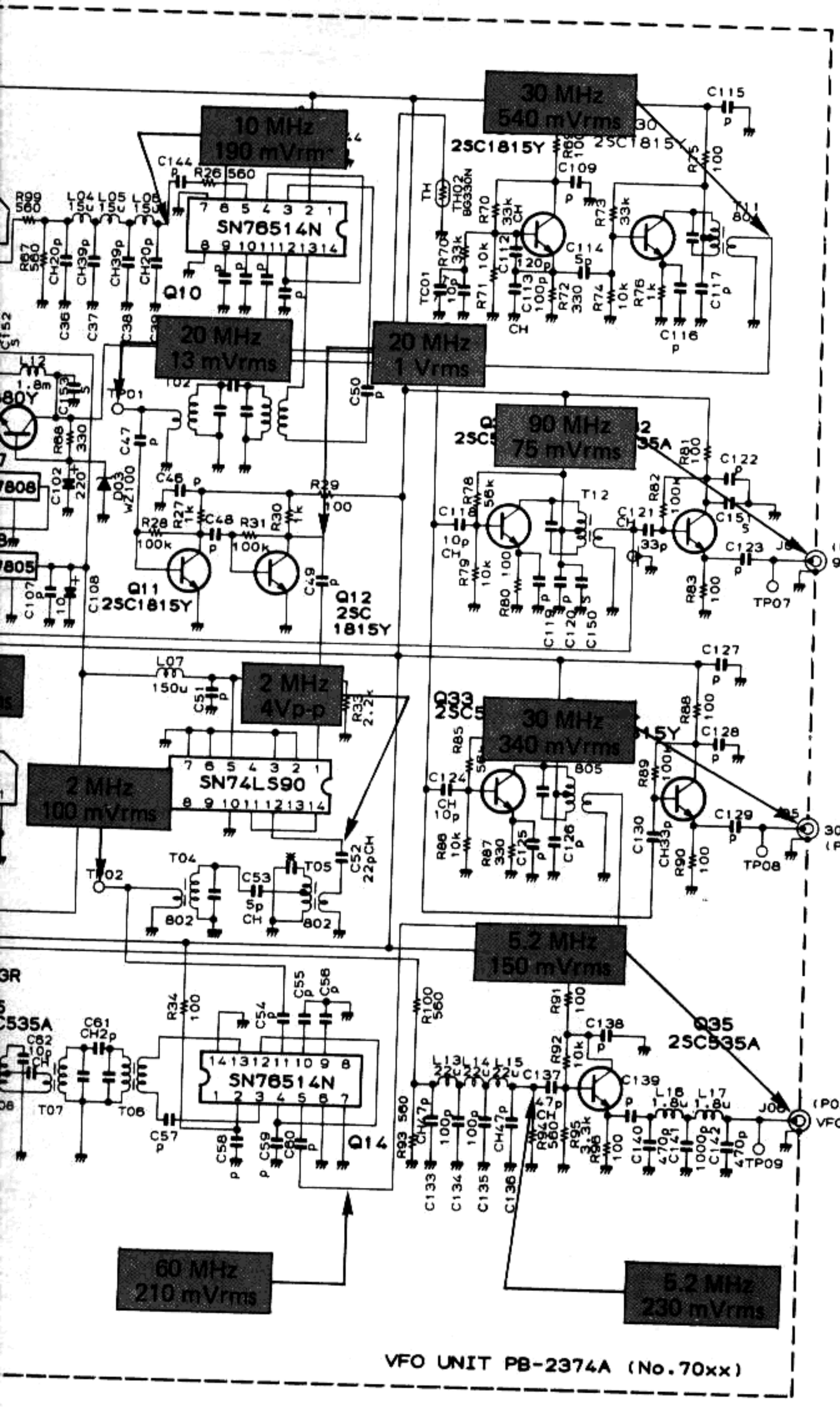

VFO UNIT PB-2374A (No.70xx)

VFO UNIT VOLTAGE CHART

(DC VOLTS)

	E (S)		C (D)		B (G1)		(G2)		REMARKS
	R	T	R	T	R	T	R	T	
Q7002	0.3		6		1.5				
Q7003	1		7.8		1.7				
Q7004	1.4		7.8		2.2				
Q7006	0.8		5.5		1.7				
Q7008	1.4		7.8		2.2				
Q7011	0		3		6				
Q7012	0		3		6				
Q7015	0.8		8		1.5				
Q7016	1.4		7.8		0				
Q7018	1		5.5		1.7				
Q7021	0		5		0				
Q7022	0.3		2.3		1.5				
Q7023	1.1		7.6		0				
Q7024	0.7		7.8		2.1				
Q7026	9.7		13.5		10.3				
Q7027	IN 9.7		COM 0		OUT 8				
Q7028	IN 8		COM 0		OUT 5				
Q7029	1.5		7.7		1.5				
Q7030	1.2		8.1		1.8				
Q7031	0.3		8		0.8				
Q7032	0.5		7.7		1.2				
Q7033	0.5		8		1.1				
Q7034	1.1		7.1		1.7				
Q7035	0.7		7.3		0				

VFO UNIT VOLTAGE CHART

(DC VOLTS)

	1	2	3	4	5	6	7	8	9	10	11	12	13	14	15	16	17	18	REMARKS
Q7001	–	0	–	–	5	–	–	–	0										
Q7005	–	7.8	–	–	–	0	–	–	–	–	–	–	–	–					
Q7007	5	–	–	–	–	–	–	–	–	–	0	0	0	0	5	0	–	0	
Q7009	0	0	–	0	5	5	5	–											
Q7010	–	7.8	–	–	–	0	–	–	–	–	–	–	–	–					
Q7013	–	0	0	–	5	0	0	–	–	0	–	–	–	–					
Q7014	–	7.8	–	–	–	0	–	–	–	–	–	–	–	–					
Q7017	–	7.8	–	–	–	0	–	–	–	–	–	–	–	–					
Q7019	5	–	–	–	–	–	–	–	–	–	–	–	–	–	–	0	–	0	
Q7020	–	–	–	–	5	–	–	–	0										
Q7025	0	0	–	0	5	5	5	–											

UNIT PARTS LAYOUT (component side)

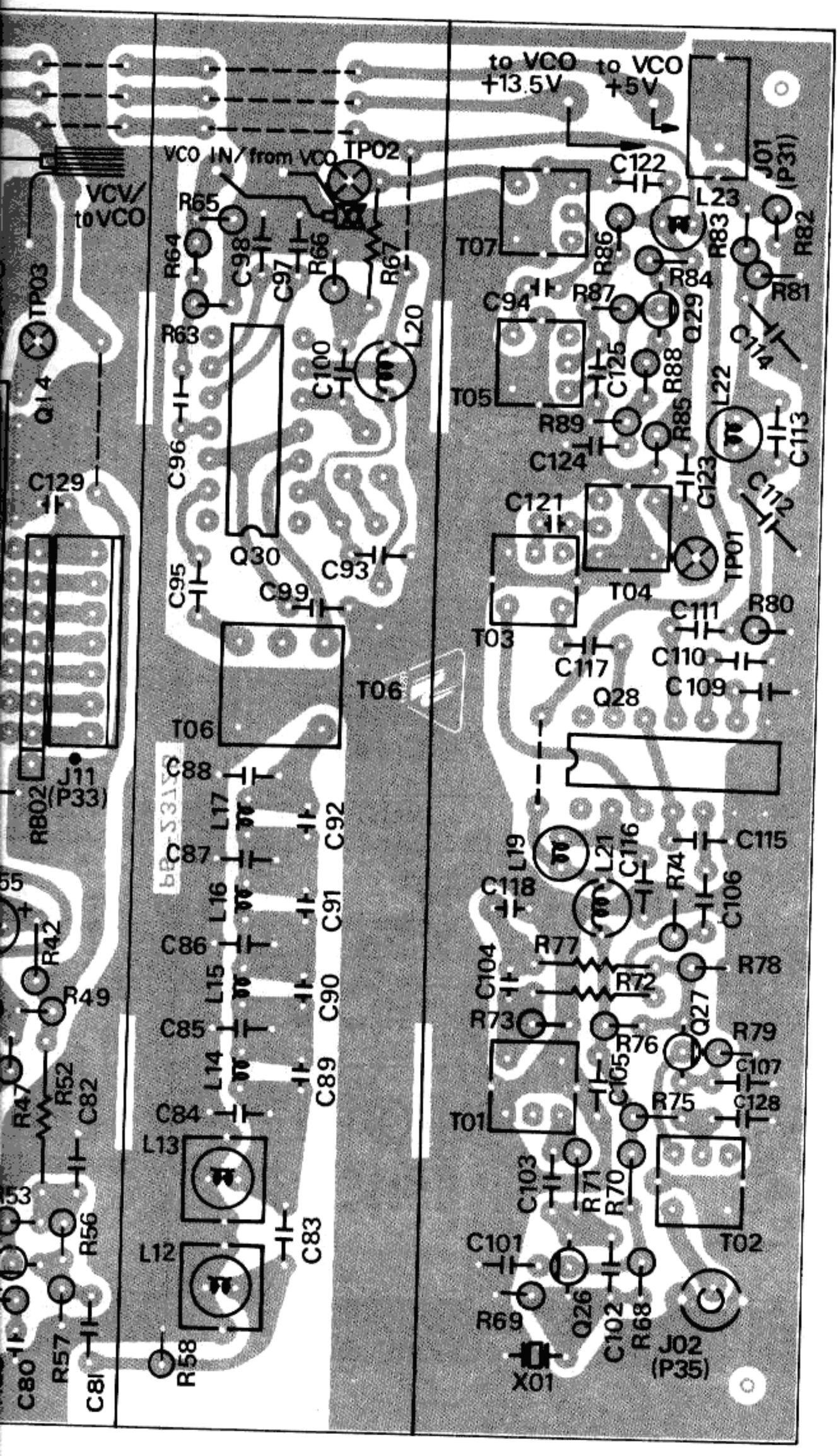

PLL UNIT VOLTAGE CHART

(DC VOLTS)

	E (S)		C (D)		B (G1)		(G2)		REMARKS
	R	T	R	T	R	T	R	T	
Q4001	0.4		4.8		1.6				USB 14.25 MHz IF SHIFT → CEN
Q4002	1.3		8.2		0				
Q4003	1		9		1.7				
Q4004	IN 13.5		COM 0		OUT 9				
Q4005	1		9		1.7				USB IF SHIFT → CEN
Q4008	0		0		0.6				
Q4009	0.4		8.8		0		4.1		
Q4010	IN 13.5		COM 0		OUT 5				
Q4024	1.9		4.3		2.6				
Q4026	2.6		9.2		2.7				
Q4027	1.5		8.8		2.3				
Q4029	1.3		9		2				
Q4031	0		13.5		0				

PLL UNIT VOLTAGE CHART

(DC VOLTS)

	1	2	3	4	5	6	7	8	9	10	11	12	13	14	15	16	REMARKS
Q4006	0	0	–	0	5	5	5	–									
Q4013	–	9	–	–	–	0	–	–	–	–	–	–	–	–			
Q4015	–	5	–	–	–	–	0	0	–	5	–	–	–	–	0	5	
Q4016	–	–	–	0	5	5	–	0	0	5	5	0	0	–	–	5	
Q4018	–	0	0	–	5	0	0	–	–	0	–	–	–	–			
Q4019	–	–	–	–	5	0	0	–	–	0	–	–	–	–			
Q4020	–	0	0	–	5	0	0	–	–	0	–	–	–	–			
Q4022	0	0	–	0	5	5	5	–									
Q4028	–	9	–	–	–	0	–	–	–	–	–	–	–	–			
Q4030	–	0	–	–	–	0	–	–	–	–	–	–	–	–			

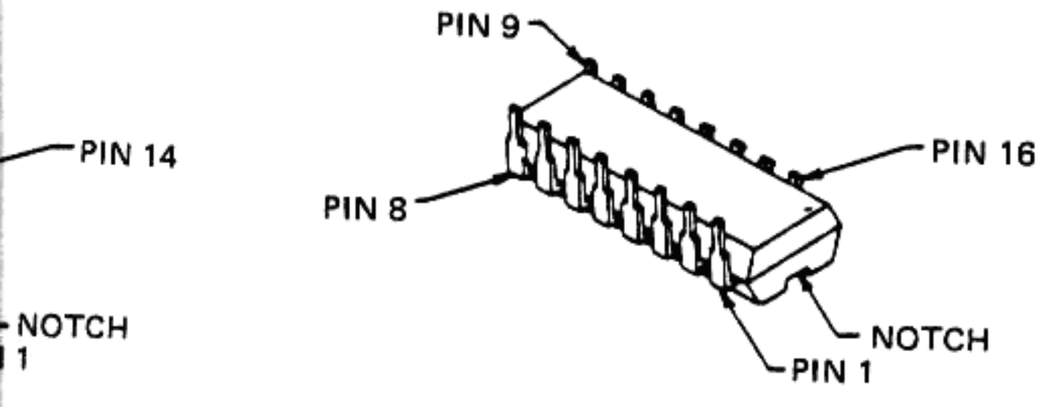

MC14027B
MC14518B

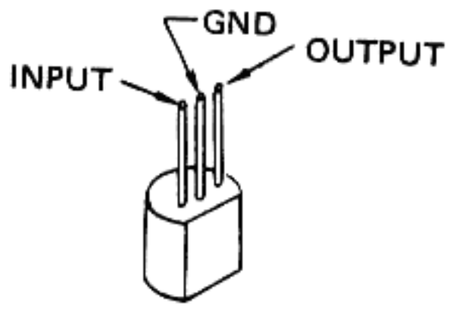

NJM78L09A

PLL UNIT PARTS LAY

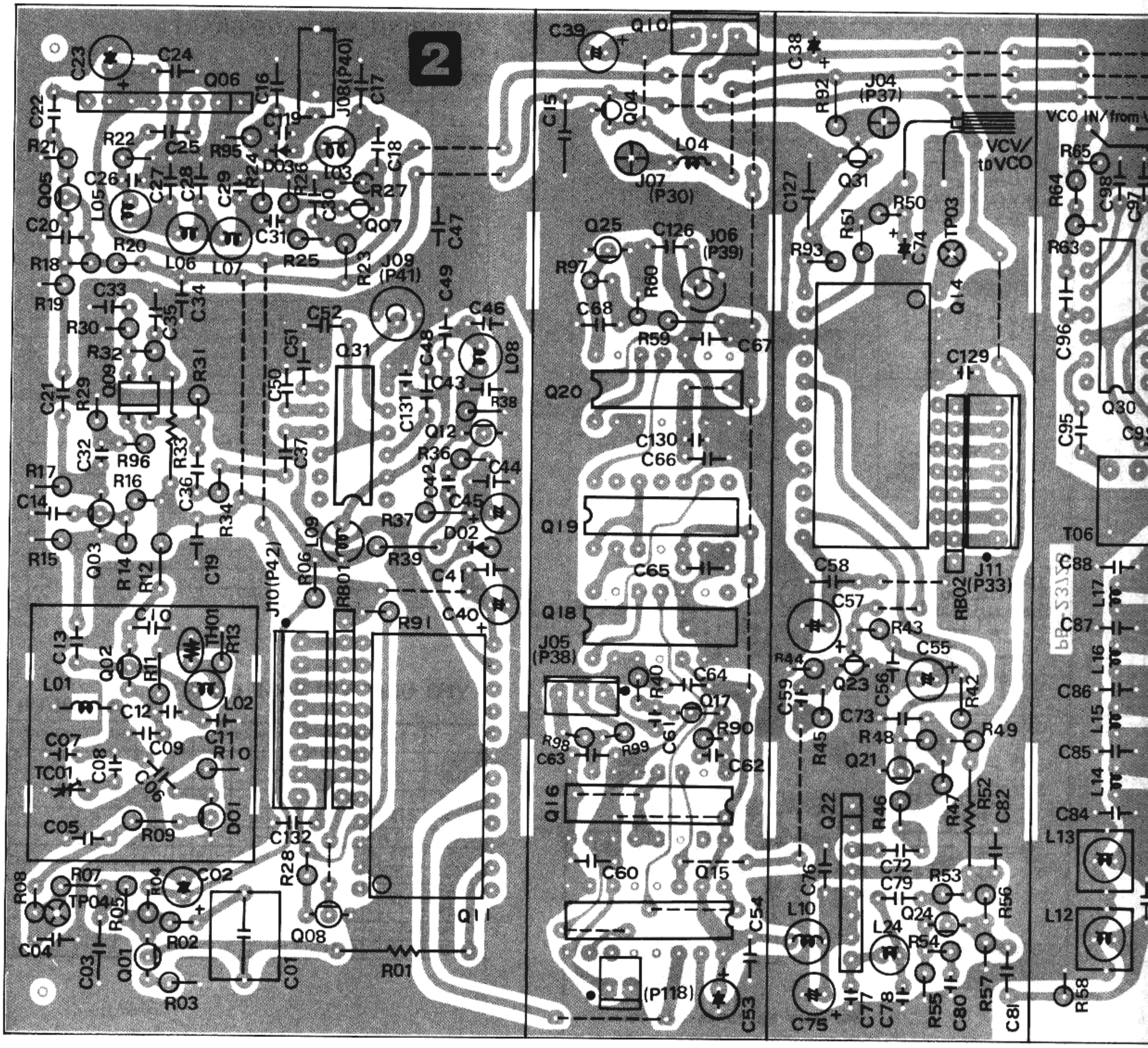

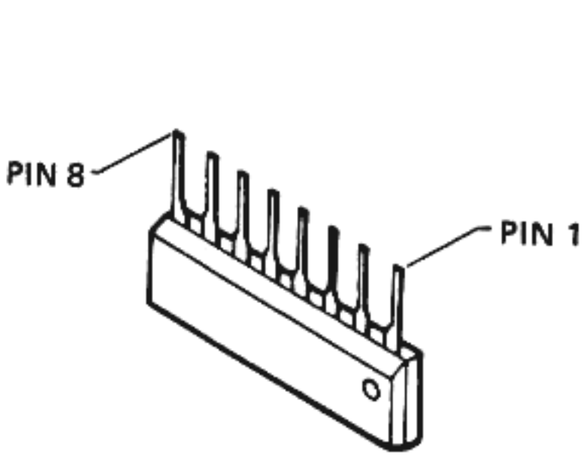

HD10551

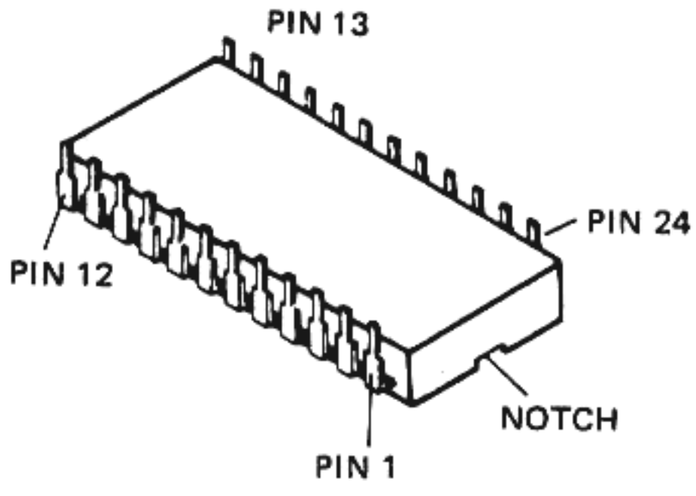

MB8718

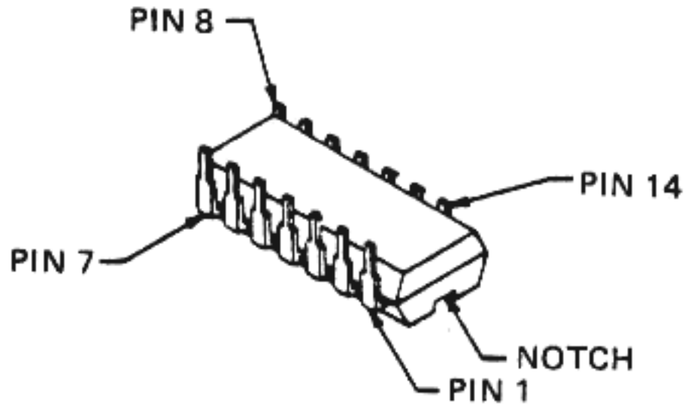

SN76514N
SN74LS90N

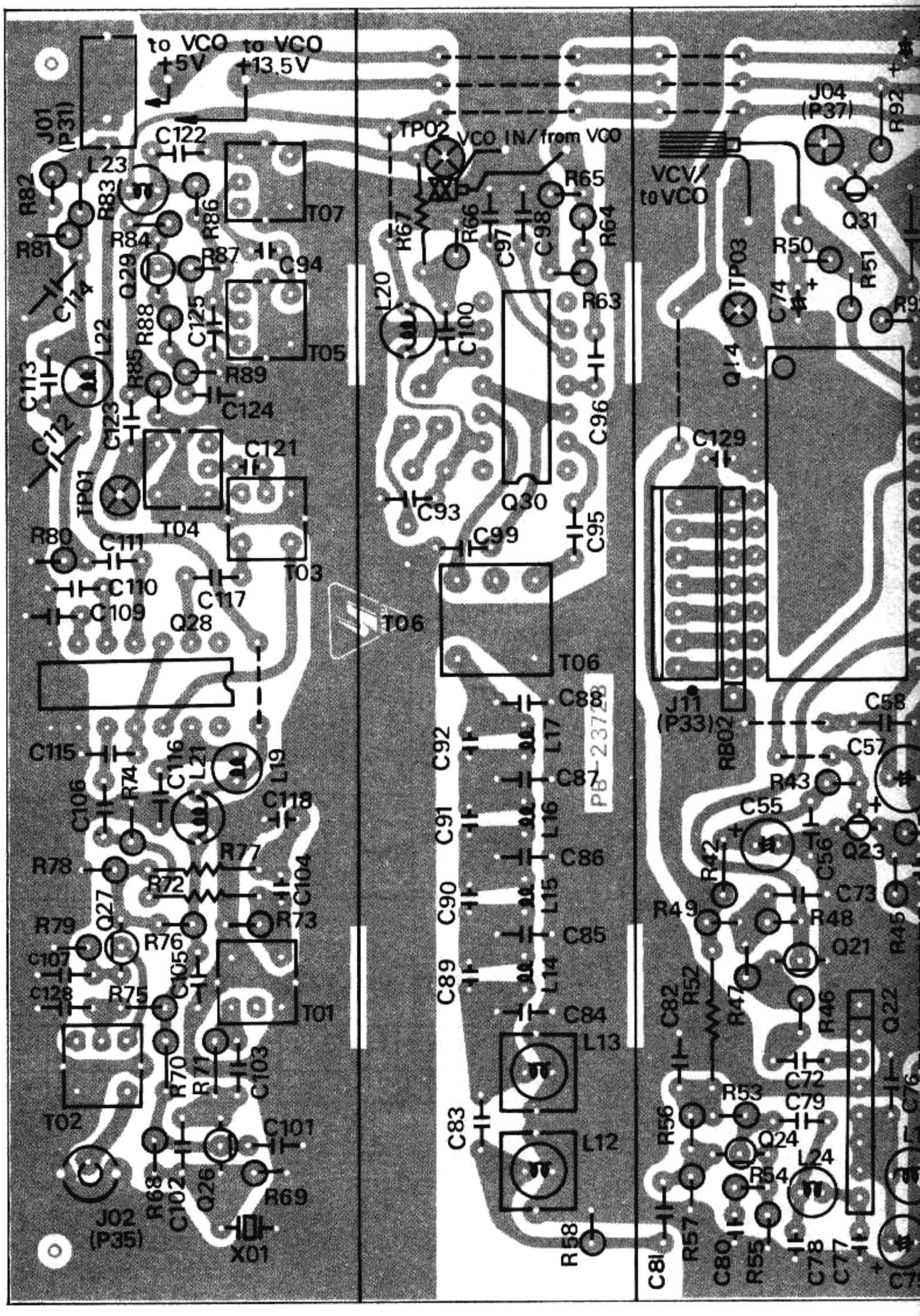

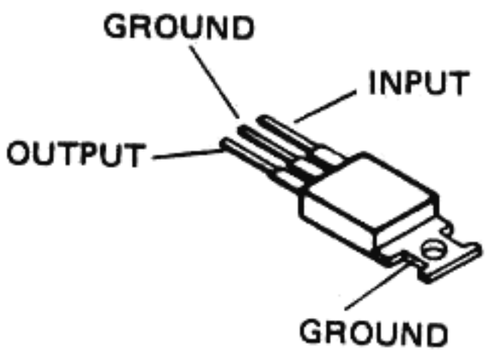

μPC7805H

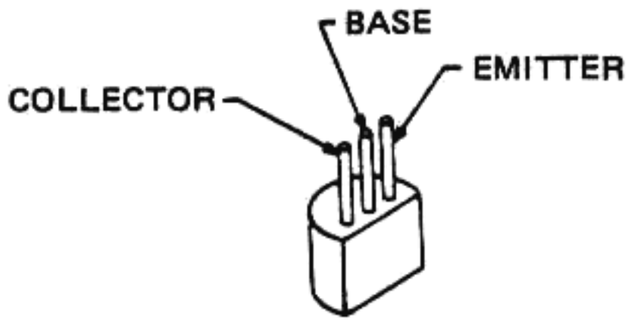

MPSA13

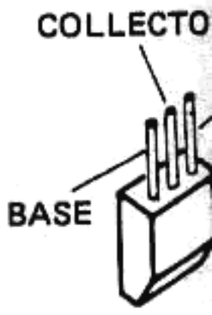

2SC535
2SC535

PLL UNIT PARTS LAYOUT (solder side)

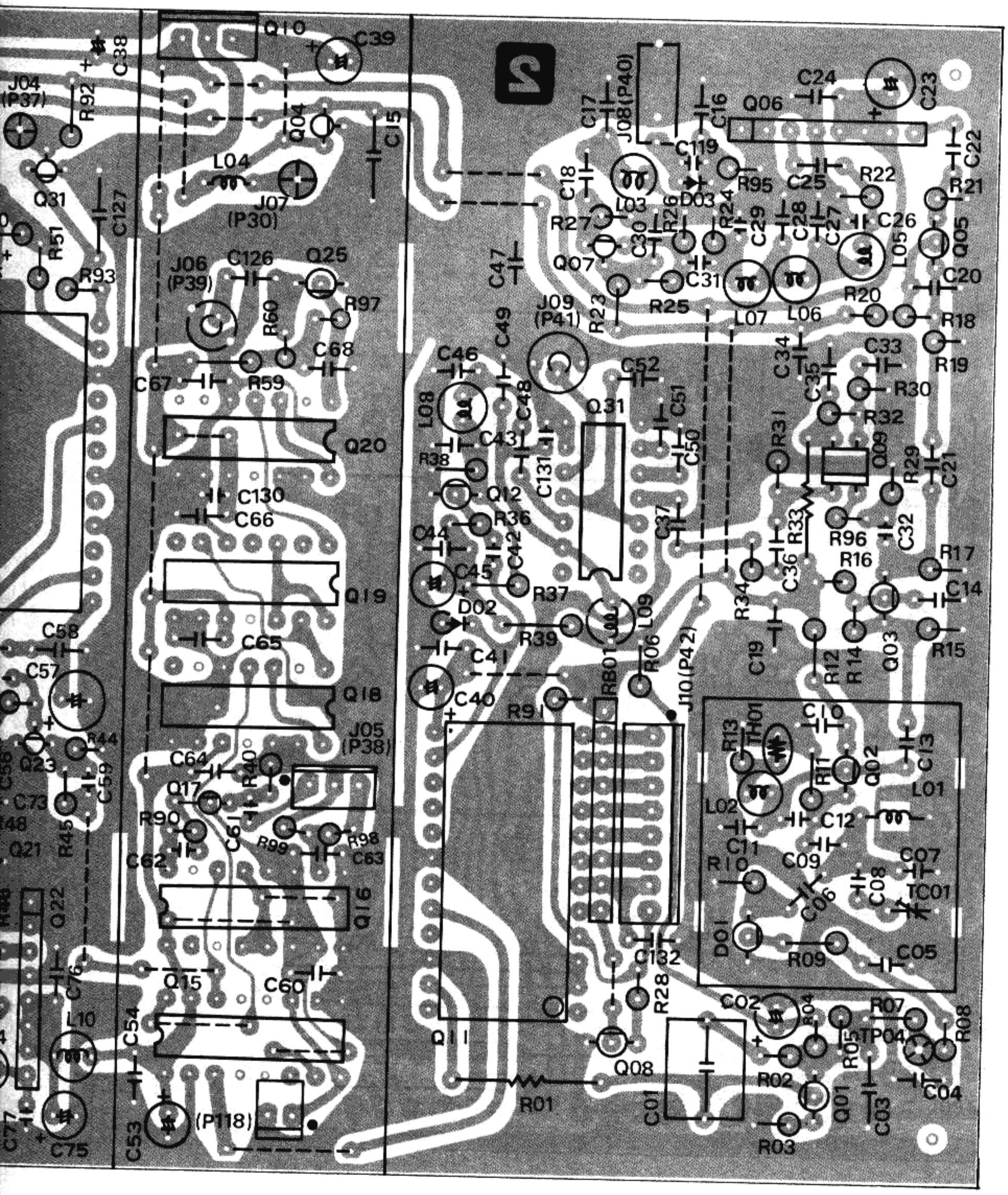

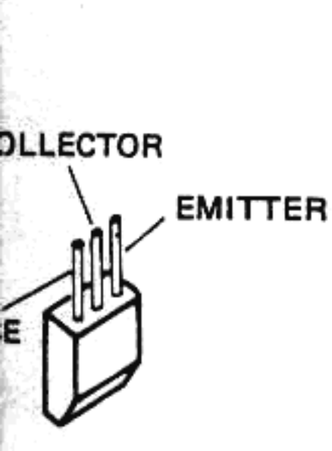

2SC535A
2SC535C

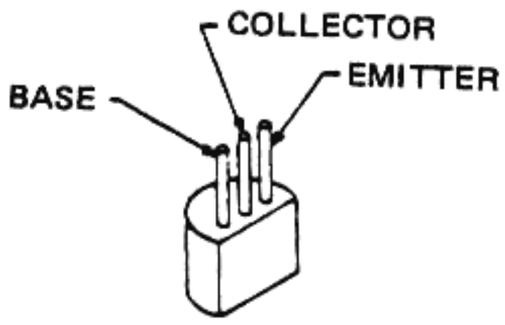

2SC535A
2SC535C
2SC380TM-Y
2SC1815GR
2SC1923R

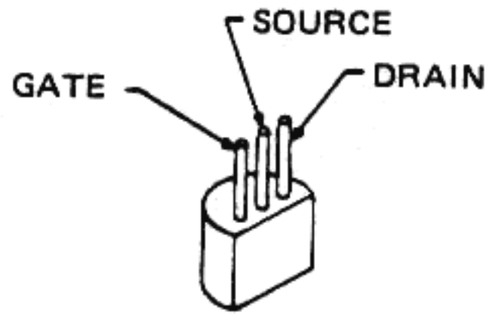

2SK19TM-GR

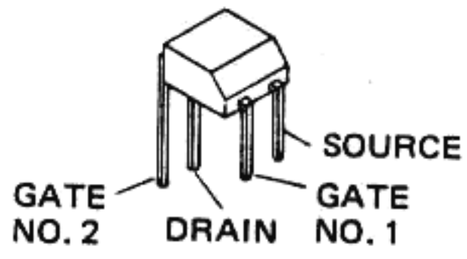

3SK73GR

UNIT PARTS LAYOUT (component side)

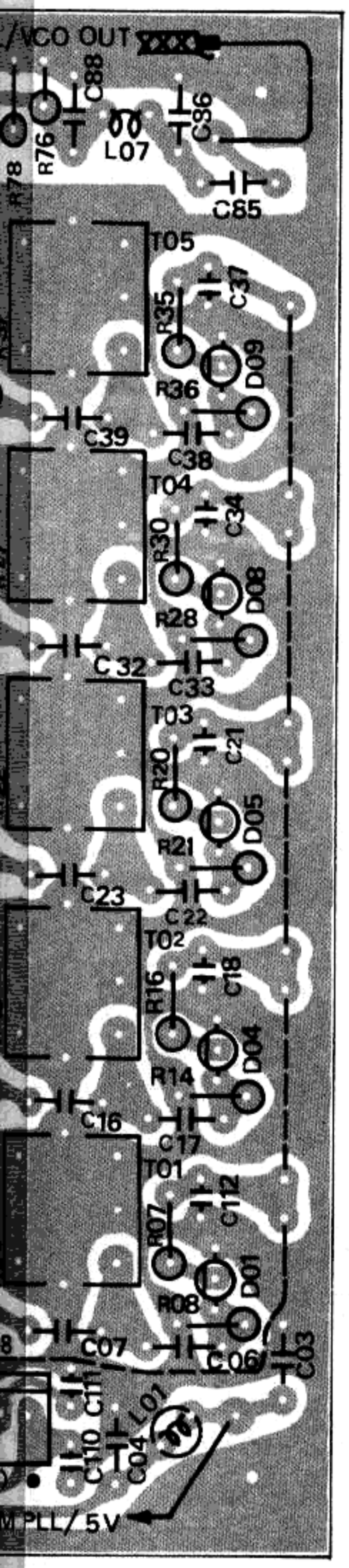

VCO UNIT VOLTAGE CHART

(DC VOLTS)

	E (S)		C (D)		B (G1)		(G2)		REMARKS
	R	T	R	T	R	T	R	T	
Q5001	IN 13.5		COM 0		OUT 9				
Q5002	9		8.9		8.4				VCO → ON
Q5005	9		0		9				VCO → OFF
Q5006 Q5009 Q5010 Q5013 Q5014 Q5017 Q5018 Q5021									
Q5003	1.5		8.3		0				VCO → ON
Q5004	0		0		0				VCO → OFF
Q5007 Q5008 Q5011 Q5012 Q5015 Q5016 Q5019 Q5020									
Q5022	1.2		7.8		1.5		4		
Q5023	2.4		7.5		2.6		5		
Q5024	0		0.2		0.8				28 MHz BAND

VCO UNIT VOLTAGE CHART

(DC VOLTS)

	1	2	3	4	5	6	7	8	9	10	11	12	13	14	15	16	REMARKS
Q5025	–	–	–	–	–	–	–	0	–	–	–	–	–	–	–	9	

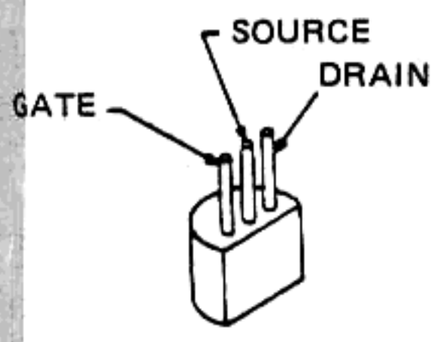

2SK19TM-BL

VCO UNIT PARTS L

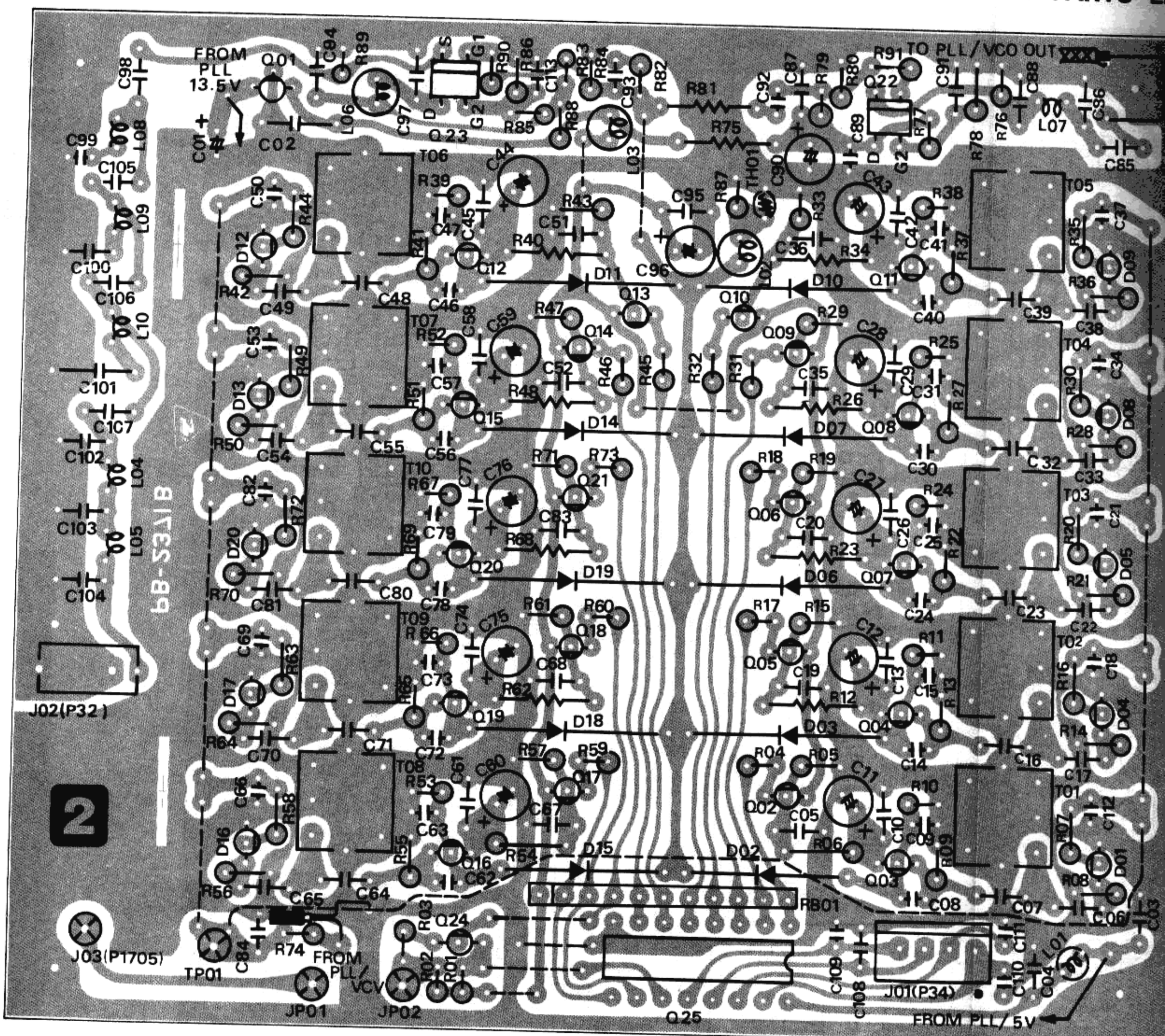

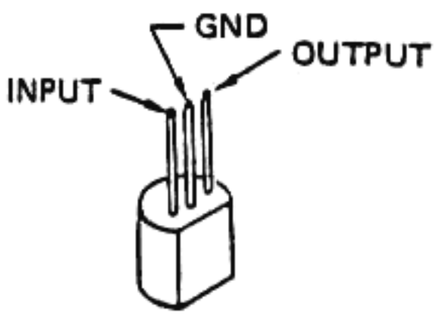

NJM78L09A

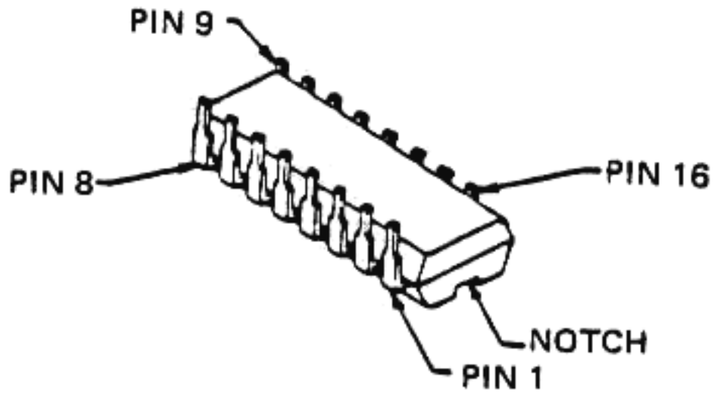

SN74LS145N

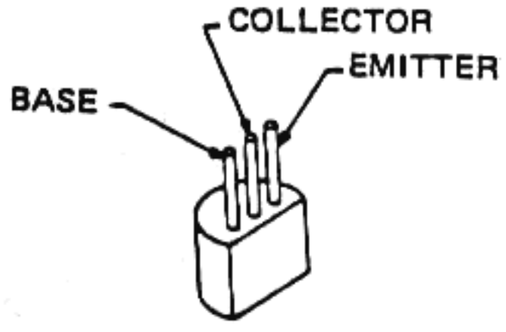

2SA733AP
2SC1815GR

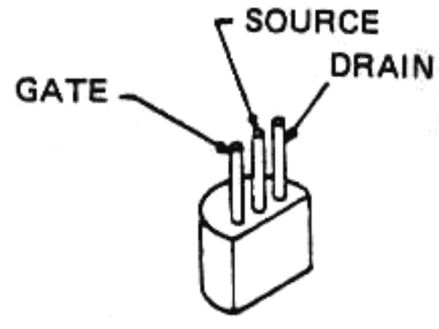

2SK19TM-BL

VCO UNIT PARTS LAYOUT (solder side)

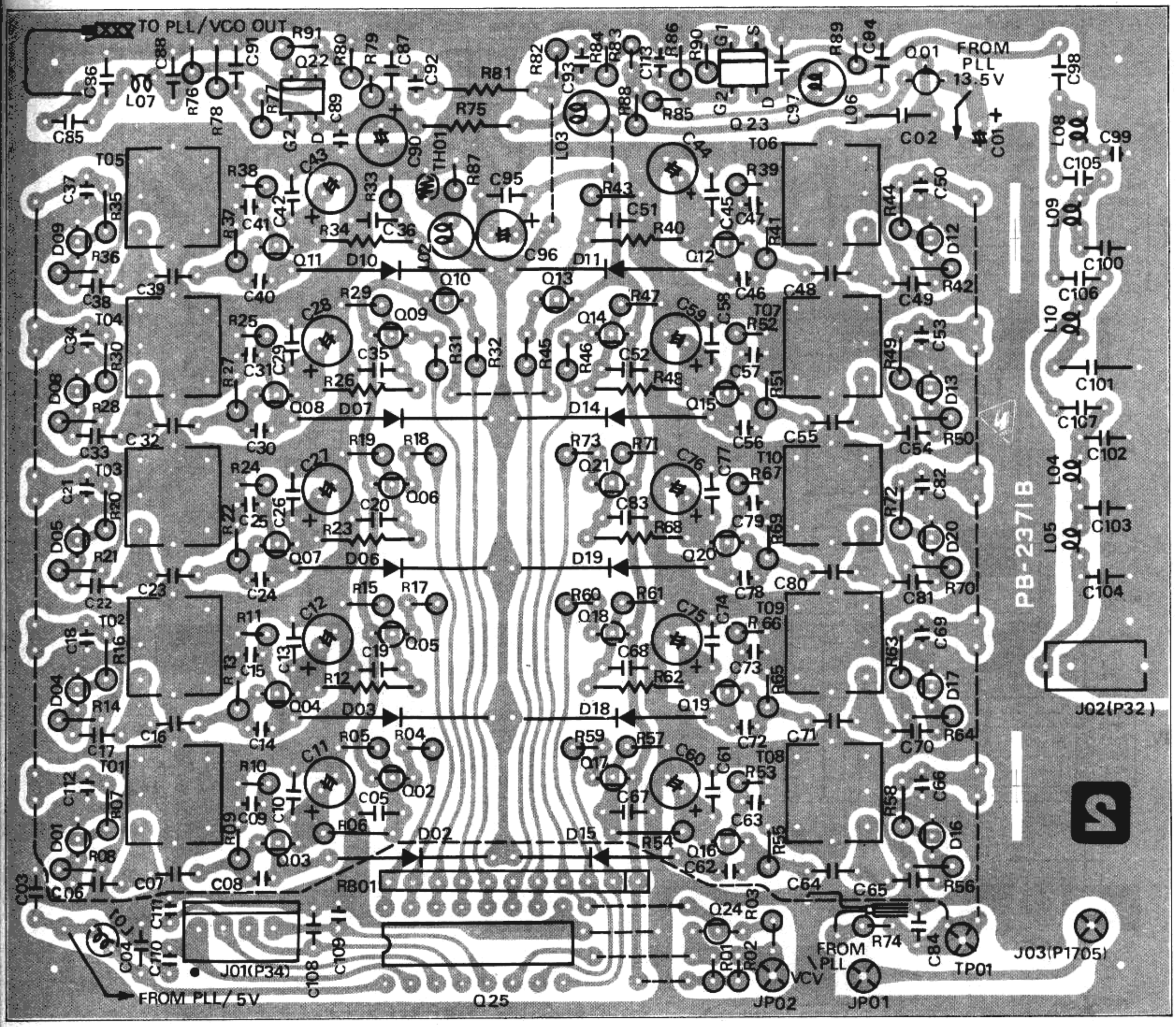

VCO UNIT

VCO UNIT PB-2371A (No.50··)

0/4V

VC04 VC03 VC02 VC01 (P34) J01

Q01 TA78L009P

Q02 2SA733AP

Q03 2SK19TM-BL

Q04 2SK19TM-BL

Q05 2SA733AP

Q06 2SA733AP

Q07 2SK19TM-BL

Q08 2SK19TM-BL

Q09 2SA733AP

Q10 2SA733AP

Q11 2SK19TM-BL

Q12 2SK19TM-BL

Q13 2SA733AP

Q14 2SA733AP

Q15 2SK19TM-BL

Q16 2SK19TM-BL

Q17 2SA733AP

Q18 2SA733AP

Q19 2SK19TM-BL

Q20 2SK19TM-BL

Q21 2SA733AP

Q22 3SK73GR

Q23 3SK73GR

Q25 2SC535C

Q30 SN76514N

Q25 SN74LS145

Q20 SN74LS90N

RB01 4.7k x7

SCI815GR

THO1 D22A

TP01

TP02

J03

J06 30MHz IN

J02 OUT LOCAL OUT (P32)

14.25 MHz USB
IF SHIFT → CEN
SW → ON

61 MHz
160 mVrms

43 MHz
100 mVrms

NOTE

CAPACITOR VALUES ARE IN μF, 50wv;
RESISTOR VALUES ARE IN Ω, 1/4W;
AND INDUCTOR VALUES IN HENRIES
UNLESS OTHERWISE NOTED.

PLL UNIT

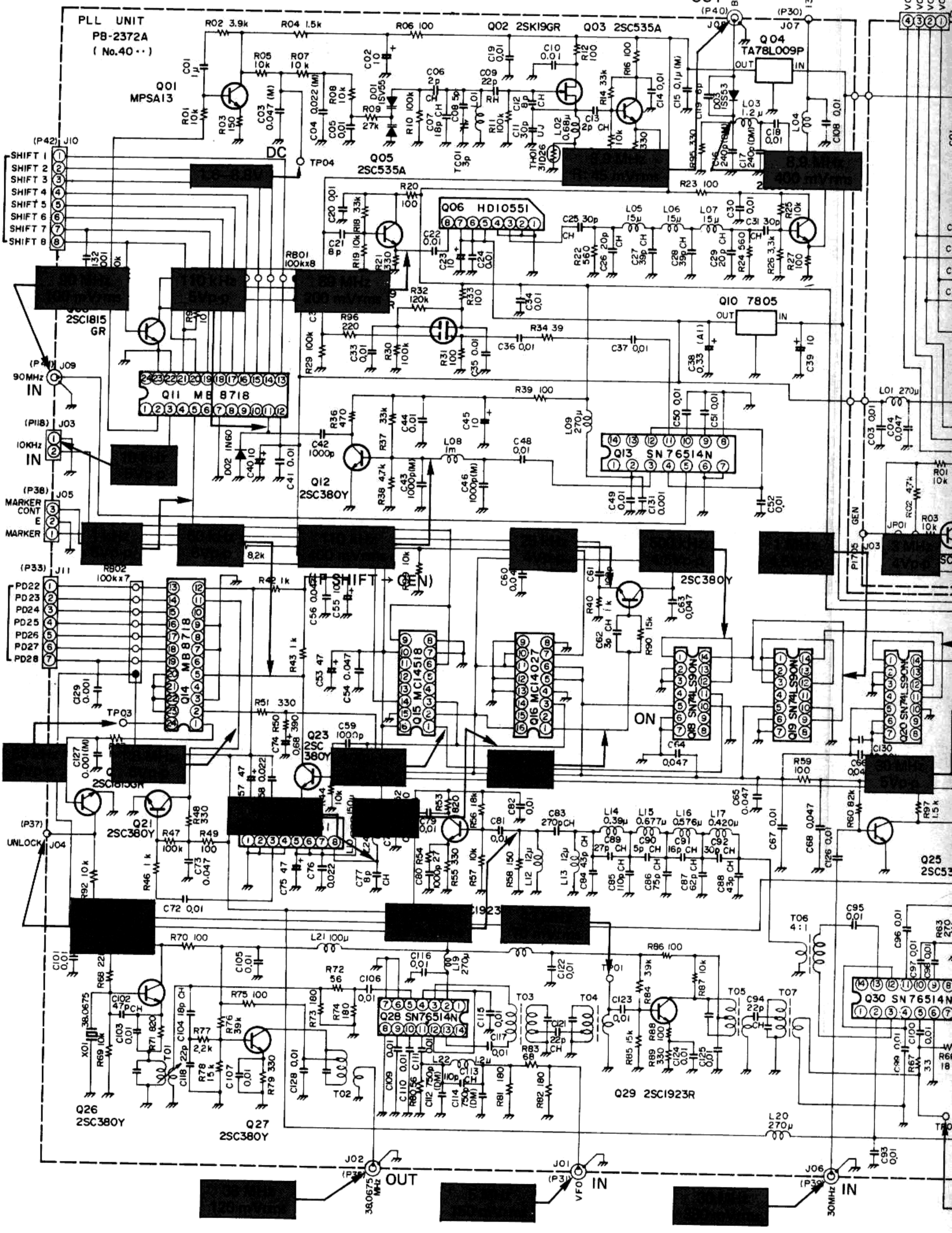
PLL UNIT
P8-2372A
(No.40 ··)
OUT
(P40) J08
BFO
(P30) J07
13.5V
0/4V
VC04 VC03 VC02 VC01
Q001 MPSA13
R02 3.9k
R04 1.5k
R06 100
Q02 2SK19GR
Q03 2SC535A
Q04 TA78L009P
Q05 2SC535A
Q06 HD10551
Q10 7805
Q11 MB 8718
Q12 2SC380Y
Q13 SN76514N
Q14 MB 8718
Q15 MC14518
Q16 MC14027
Q18 SN74LS90N
Q19 SN74LS90N
Q20 SN74LS90N
Q21 2SC380Y
Q23 2SC 380Y
Q25 2SC53
Q26 2SC380Y
Q27 2SC380Y
Q28 SN76514N
Q29 2SC1923R
Q30 SN76514N
2SC1815 GR
2SC1815GR
(P42) J10
SHIFT 1
SHIFT 2
SHIFT 3
SHIFT 4
SHIFT 5
SHIFT 6
SHIFT 7
SHIFT 8
DC
TP04
TP03
TP01
R801 100kx8
R802 100kx7
(P41) J09
90MHz IN
(P118) J03
10KHz IN
(P38) J05
MARKER CONT
MARKER
(P33) J11
PD22
PD23
PD24
PD25
PD26
PD27
PD28
(P37) J04
UNLOCK
(P SHIFT → GEN)
ON
J02 (P36) OUT
38.0675 MHz
J01 (P31) IN
VFO
J06 (P39) IN
30MHz
GEN
JP01
P1705 J03
0/9V

CPU UNIT P

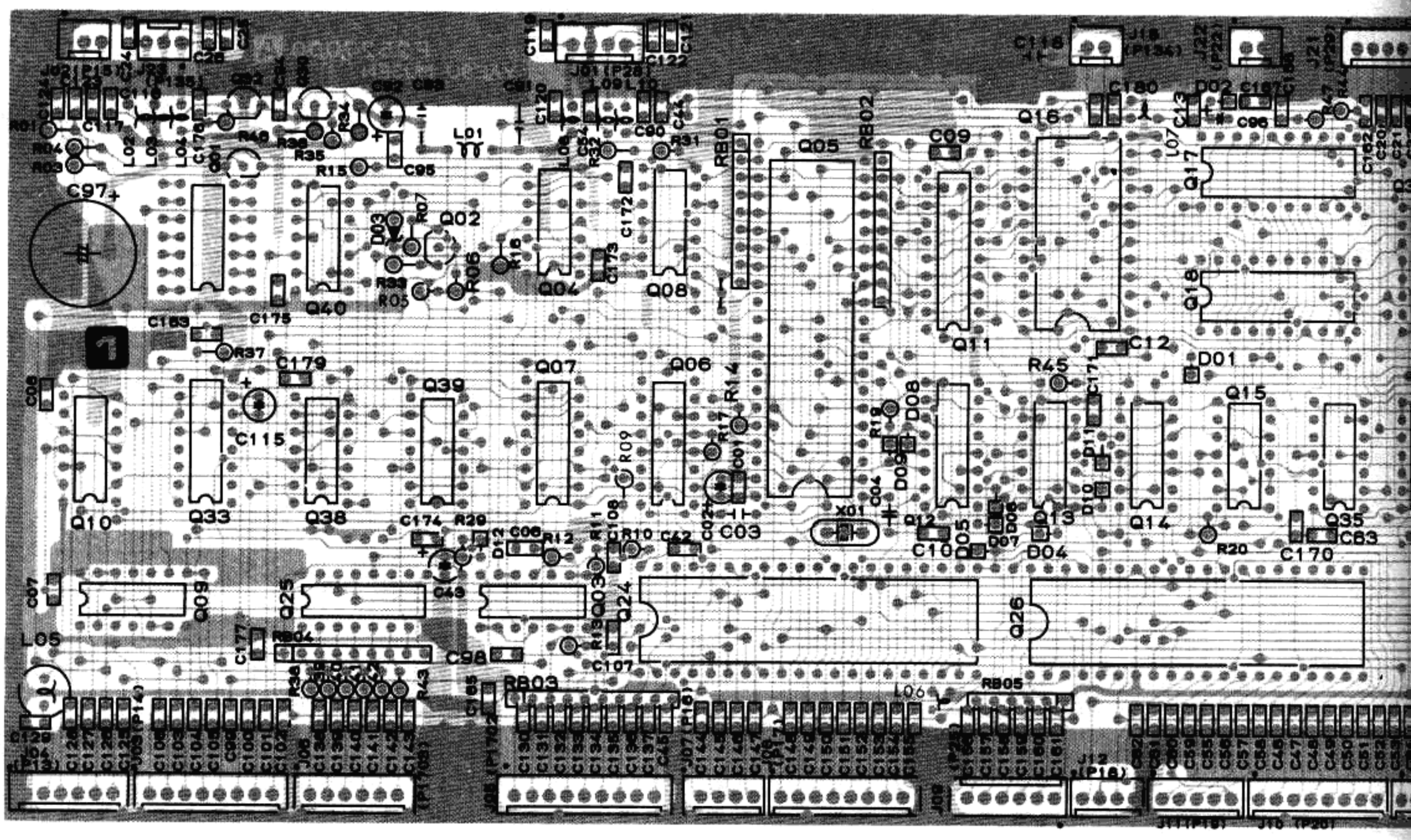
J02 (P151)
J03 (P135)
J01 (P28)
J09
J10
J18 (P134)
C118
C122
C180
D02
C187
C96
C95
C97
C09
Q16
Q05
RB01
RB02
Q17
Q18
Q19
Q02
Q04
Q08
Q40
C175
C153
R37
C179
C115
Q39
Q07
Q06
Q11
C12
D01
R45
Q15
Q10
Q33
Q38
C174
R29
C106
R12
R11
R10
C42
C03
X01
Q12
C10
D04
Q13
Q14
R20
C170
C63
Q35
Q09
Q25
Q03
Q24
Q26
C107
C98
RB03
RB04
RB05
L05
L06
J04 (P13)
J05 (P14)
J06 (P16)
J07 (P18)
J08 (P17)
J12 (P18)
J11 (P19)
J10 (P20)

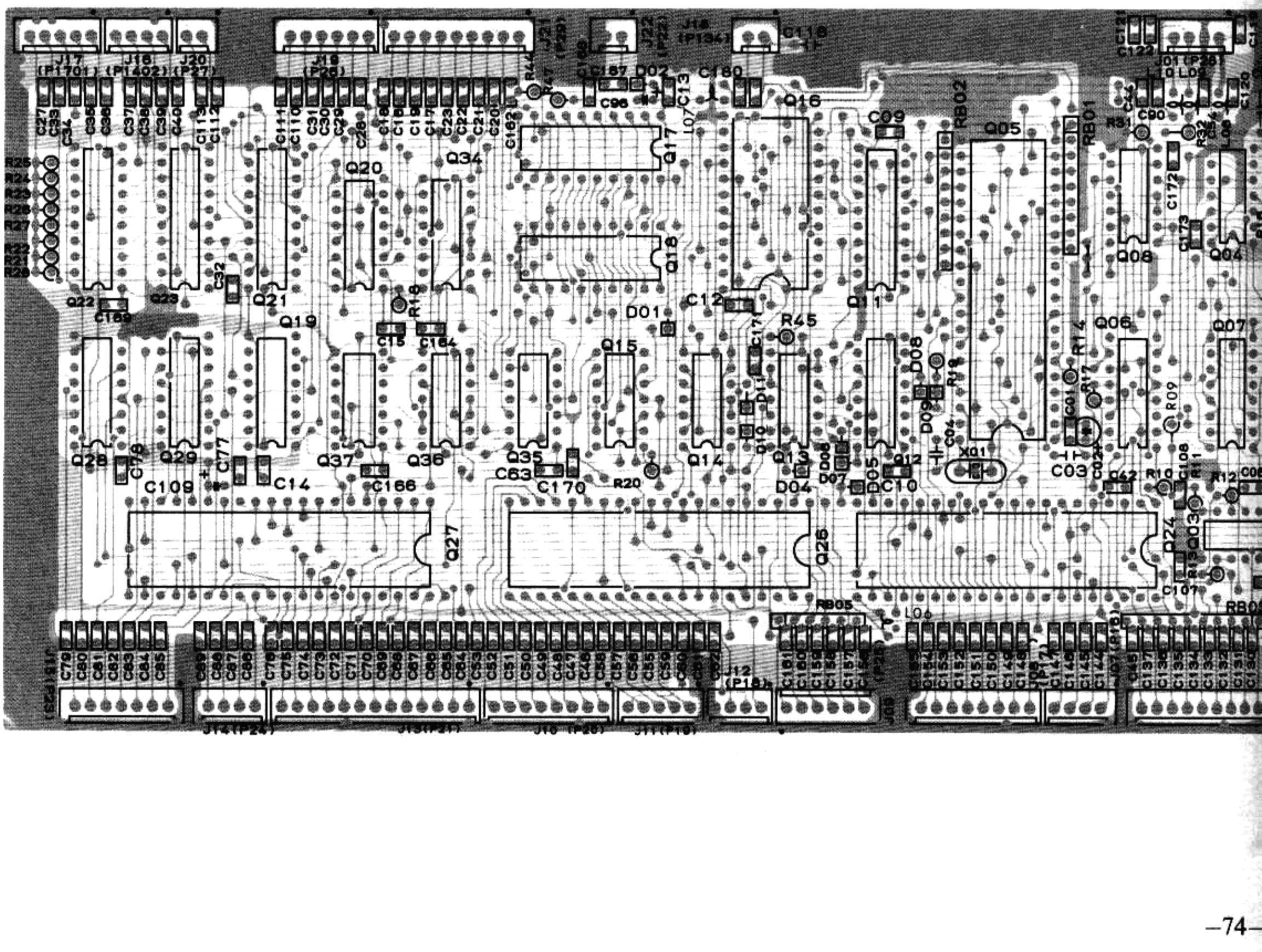
J17 (P1701)
J16 (P1402)
J20 (P27)
J19 (P26)
J21 (P29)
J22 (P22)
J14 (P134)
C118
C122
J01 (P28)
C187
D02
C160
C96
C107
Q16
Q05
RB01
RB02
Q17
Q18
Q34
Q20
Q21
Q19
Q22
Q23
C159
C32
R18
C15
C164
Q15
D01
C12
R45
Q06
Q07
Q08
Q04
Q11
Q28
Q29
Q37
Q36
Q35
C63
C170
R20
C109
C14
C166
C77
C76
Q27
Q26
Q24
Q03
C107
RB05
RB04
RB03
L06
J12 (P18)
J14 (P24)
J13 (P21)
J10 (P26)
J11 (P19)
J08 (P17)
J07 (P18)

UNIT PAPTS LAYOUT

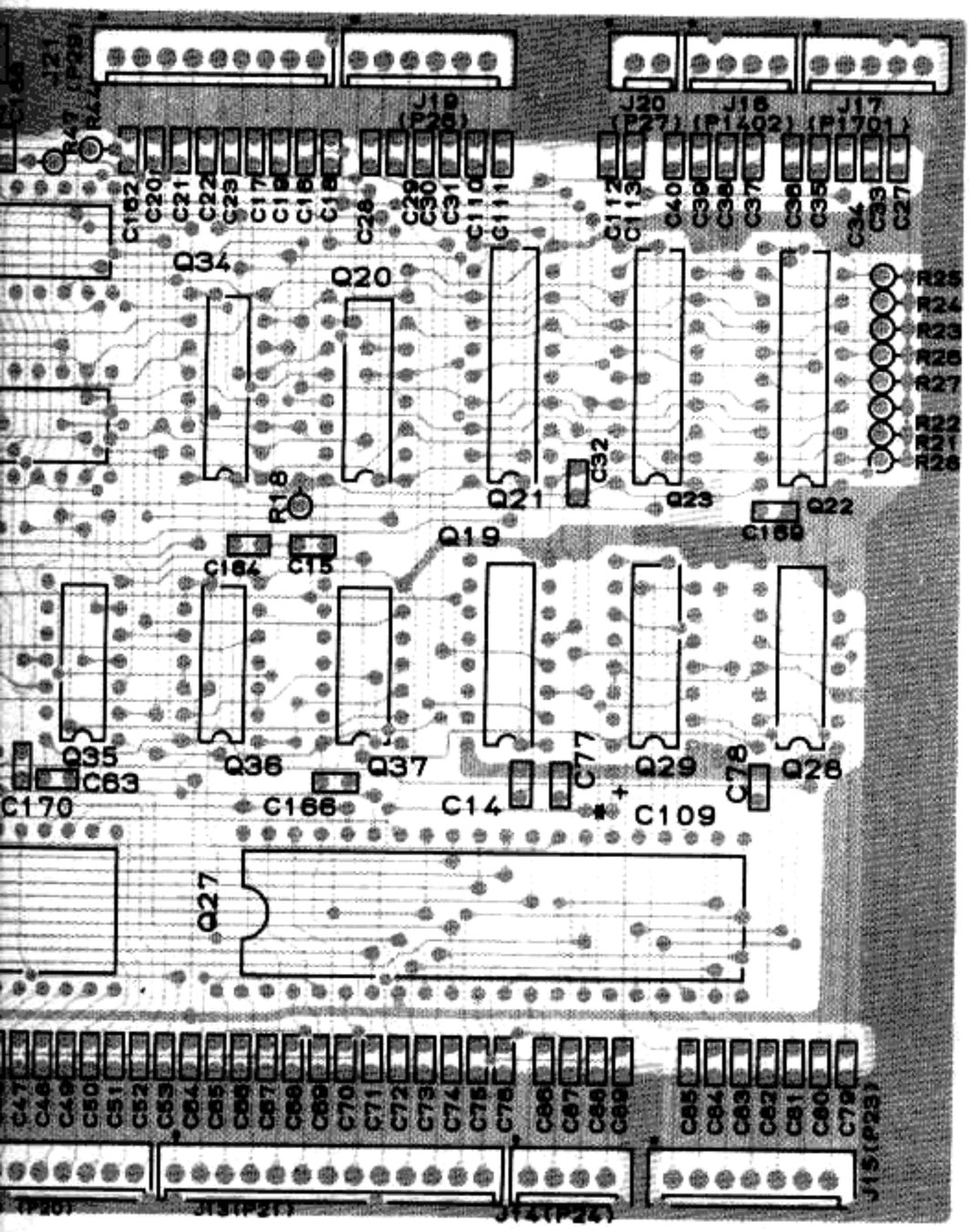

Viewed from component side

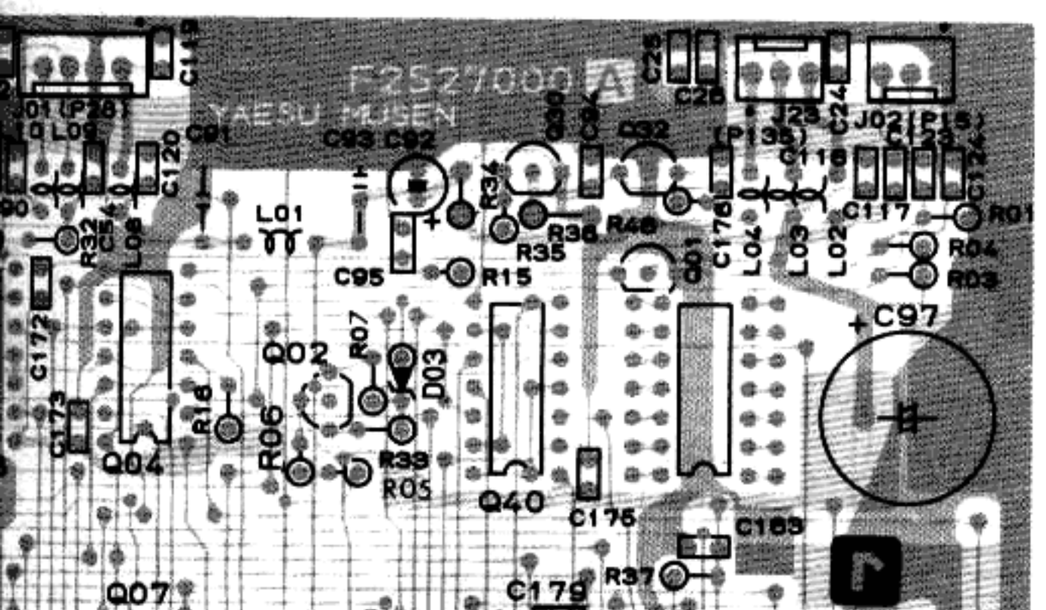

Viewed from solder side

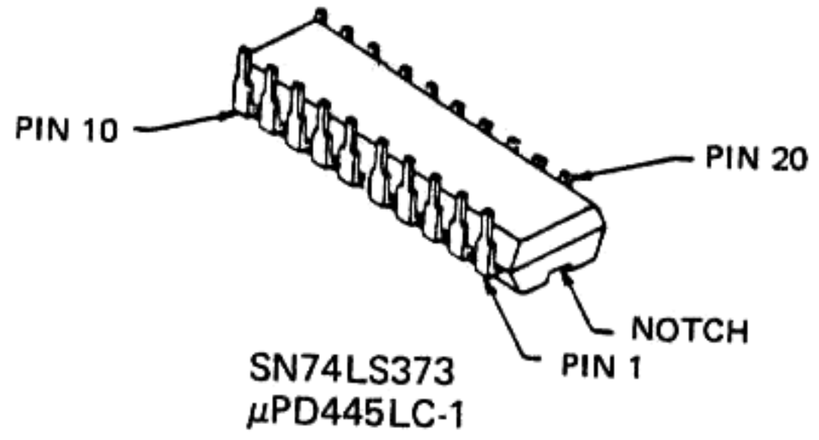

SN74LS373
μPD445LC-1

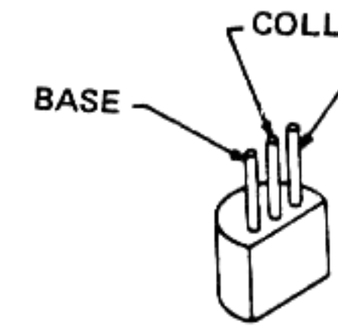

2SA733AP
2SC1815Y

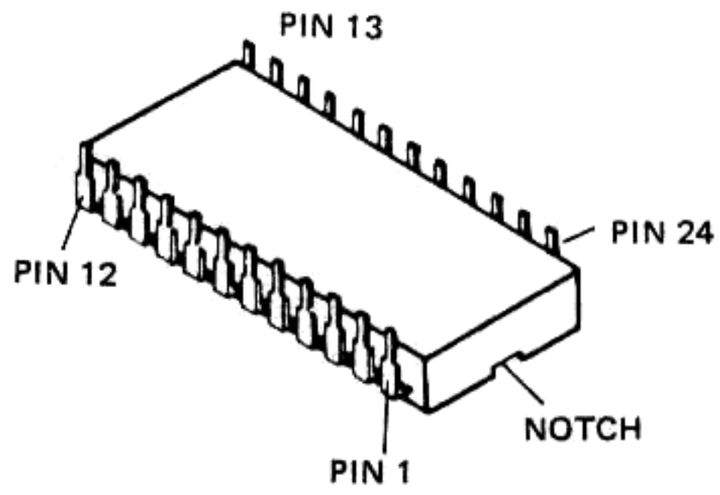

μPD2364C-010

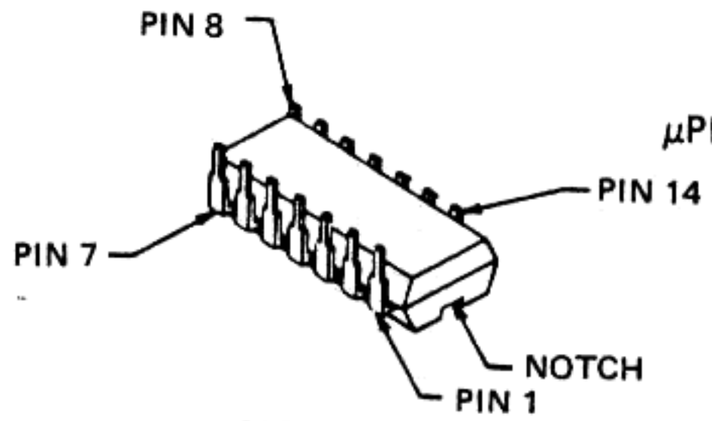

MC14016
MC14093B
SN74LS14
SN74LS02
SN74LS74
SN74LS30
SN74LS00

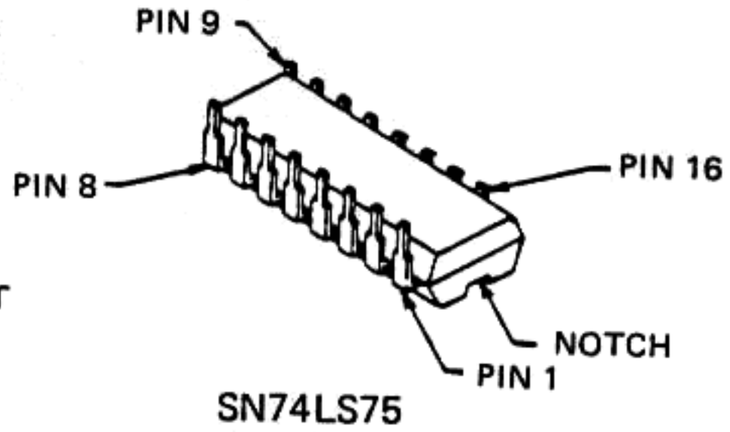

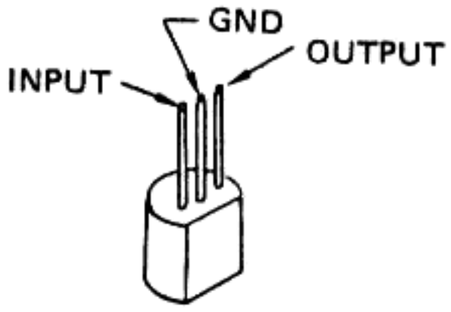

SN74LS75
SN74LS190
SN74LS42
SN74LS365
SN74LS145
SN74LS123
MC14504

μPC78L05

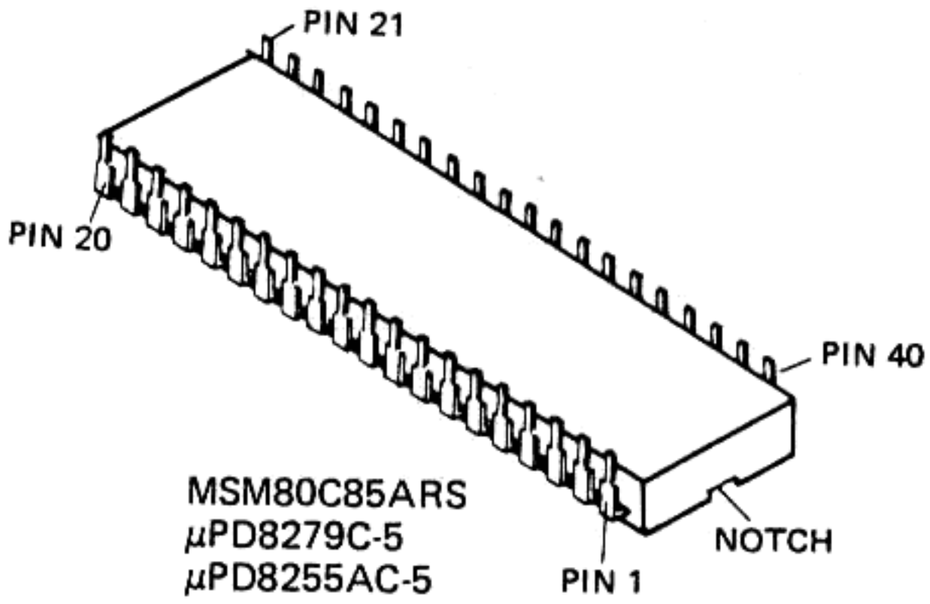

MSM80C85ARS
μPD8279C-5
μPD8255AC-5

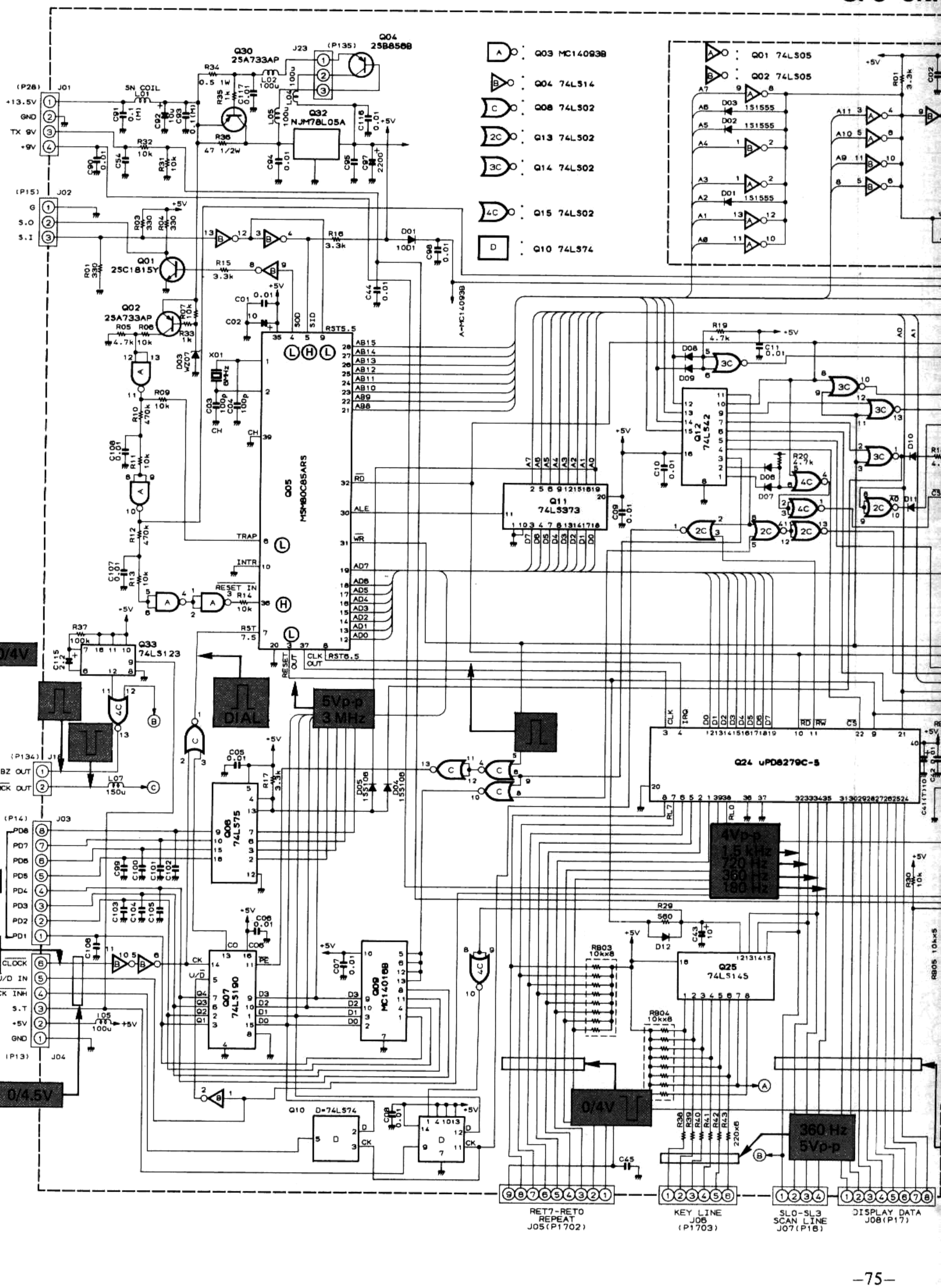
Q01 74LS05
Q02 74LS05
Q03 MC140938
Q04 74LS14
Q08 74LS02
Q13 74LS02
Q14 74LS02
Q15 74LS02
Q10 74LS74
Q04 2SB858B
Q30 2SA733AP
Q32 NJM78L05A
Q01 2SC1815Y
Q02 2SA733AP
Q33 74LS123
Q05 MSM80C85ARS
Q06 74LS75
Q07 74LS190
Q09 MC140188
Q10 D=74LS74
Q11 74LS373
Q12 74LS42
Q24 uPD8279C-5
Q25 74LS145
A-MC140938
0/4V
0/4.5V
DIAL
5Vp-p 3 MHz
4Vp-p 1.5 kHz 720 Hz 360 Hz 180 Hz
360 Hz 5Vp-p
RET7-RET0 REPEAT J05(P1702)
KEY LINE J06 (P1703)
SL0-SL3 SCAN LINE J07(P18)
DISPLAY DATA J08(P17)

CPU UNIT

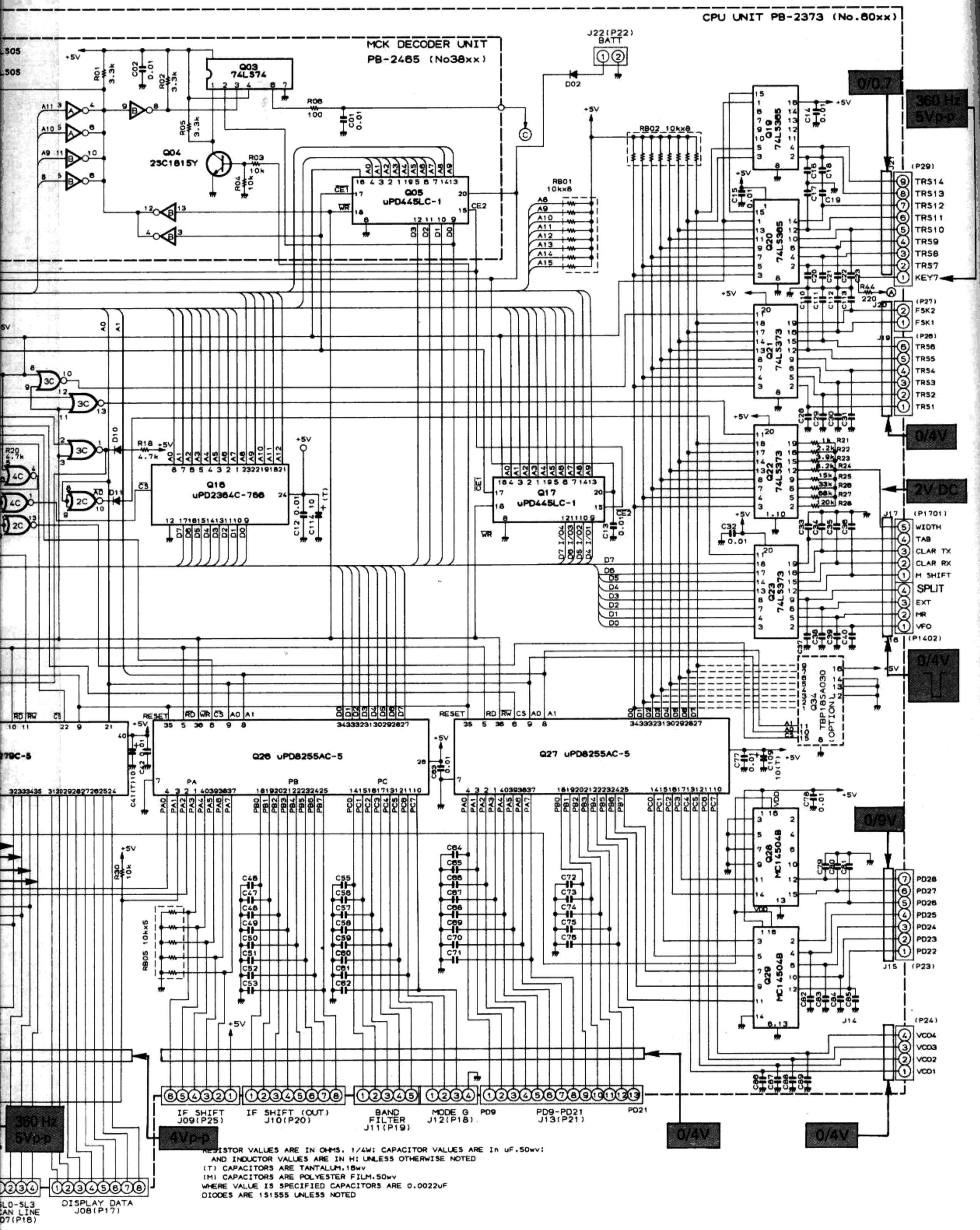
CPU UNIT PB-2373 (No.80xx)
MCK DECODER UNIT
PB-2465 (No38xx)
Q03 74LS74
Q04 2SC1815Y
Q05 uPD445LC-1
Q16 uPD2364C-766
Q17 uPD445LC-1
Q19 74LS365
Q20 74LS365
Q21 74LS373
Q22 74LS373
Q23 74LS373
Q26 uPD8255AC-5
Q27 uPD8255AC-5
Q28 MC145048
Q29 MC145048
Q34 TBP18SA030 (OPTION)
RB01 10kx8
RB02 10kx8
RB05 10kx5
J22(P22) BATT
J21 (P29) TRS14 TRS13 TRS12 TRS11 TRS10 TRS9 TRS8 TRS7 KEY7
J20 (P27) FSK2 FSK1
J19 (P26) TRS6 TRS5 TRS4 TRS3 TRS2 TRS1
J17 (P1701) WIDTH TAB CLAR TX CLAR RX M SHIFT SPLIT EXT MR VFO
J16 (P1402)
J15 (P23) PD28 PD27 PD26 PD25 PD24 PD23 PD22
J14 (P24) VCO4 VCO3 VCO2 VCO1
0/0.7
360 Hz 5Vp-p
0/4V
2V DC
0/4V
0/9V
0/4V
0/4V
360 Hz 5Vp-p
4Vp-p
IF SHIFT J09(P25)
IF SHIFT (OUT) J10(P20)
BAND FILTER J11(P19)
MODE G J12(P18)
PD9
PD9-PD21 J13(P21)
PD21
DISPLAY DATA J08(P17)
RESISTOR VALUES ARE IN OHMS, 1/4W; CAPACITOR VALUES ARE In uF,50wv;
AND INDUCTOR VALUES ARE IN H; UNLESS OTHERWISE NOTED
(T) CAPACITORS ARE TANTALUM,16wv
(M) CAPACITORS ARE POLYESTER FILM,50wv
WHERE VALUE IS SPECIFIED CAPACITORS ARE 0.0022uF
DIODES ARE 1S1555 UNLESS NOTED

CPU UNIT VOLTAGE CHART

(DC VOLTS)

	E (S)		C (D)		B (G1)		(G2)		REMARKS
	R	T	R	T	R	T	R	T	
Q6001	0		0		0.7				
Q6002	13.5		13.5		13				
Q6030	13.5		13.5		13				
Q6032	IN 13.5		COM 0		OUT 5				

MCK DECODER UNIT VOLTAGE CHART

(DC VOLTS)

	E (S)		C (D)		B (G1)		(G2)		REMARKS
	R	T	R	T	R	T	R	T	
Q3804	0		4		0				

CPU UNIT VOLTAGE CHART

(DC VOLTS)

	1	2	3	4	5	6	7	8	9	10	11	12	13	14	15	16	17	18	19	20	REMARKS
Q6003	0	0	5	0	5	5	0	0	0	5	0	–	–	5							
Q6004	–	–	–	–	–	–	0	–	–	–	–	–	–	5							
Q6006	–	–	–	–	5	–	–	–	–	–	–	0	–	–	–	–					
Q6007	–	–	–	0	–	–	–	0	–	–	–	–	–	–	–	5					
Q6008	–	–	–	–	–	–	0	–	–	–	–	–	–	5							
Q6009	–	–	–	–	–	–	0	–	–	–	–	–	–	–	–	5					
Q6010	–	–	–	5	–	–	0	–	–	5	–	–	5	5							
Q6011	0	–	–	–	–	–	–	–	–	0	–	–	–	–	–	–	–	–	–	5	
Q6012	–	–	–	–	–	–	–	0	–	–	–	–	–	–	–	5					
Q6013	–	–	–	–	–	–	0	–	–	–	–	–	–	5							
Q6014	–	–	–	–	–	–	0	–	–	–	–	–	–	5							
Q6015	–	–	–	–	–	–	0	–	–	–	–	–	–	5							
Q6017	–	–	–	–	–	–	–	0	–	–	–	–	–	–	–	–	–	–	–	5	
Q6019	–	–	–	–	–	–	–	0	–	–	–	–	–	–	–	5					
Q6020	–	–	–	–	–	–	–	0	–	–	–	–	–	–	–	5					
Q6021	0	–	–	–	–	–	–	–	–	0	–	–	–	–	–	–	–	–	–	5	
Q6022	0	–	–	–	–	–	–	–	–	0	–	–	–	–	–	–	–	–	–	5	
Q6023	0	–	–	–	–	–	–	–	–	0	–	–	–	–	–	–	–	–	–	5	
Q6025	–	–	–	–	–	–	–	0	–	–	–	0	–	–	–	5					
Q6028	5	–	0	–	0	–	0	0	0	–	–	–	–	–	–	9					
Q6029	5	–	–	–	–	–	–	0	–	–	–	–	0	0	–	9					
Q6033	–	–	–	–	–	–	5	0	–	5	5	–	–	–	–	5					
Q6034	–	–	–	–	–	–	–	0	–	–	–	0	0	0	–	5					

MCK DECODER UNIT VOLTAGE CHART

(DC VOLTS)

	1	2	3	4	5	6	7	8	9	10	11	12	13	14	15	16	17	18	19	20	REMARKS
Q3803	5	–	–	5	–	–	0	–	–	–	–	–	–	5							
Q3805	–	–	–	–	–	–	–	0	–	–	–	–	–	–	–	–	–	–	–	5	

FSK UNIT PARTS LAYOUT

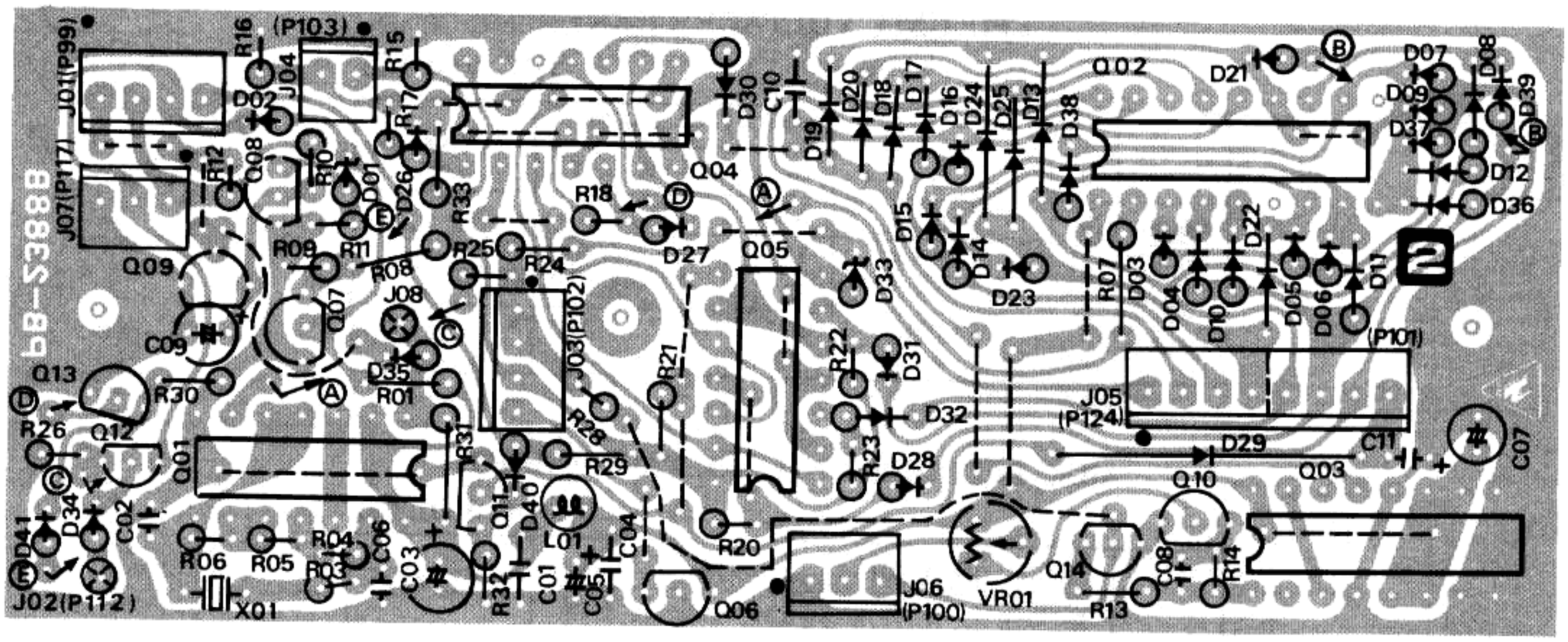

Viewed from component side

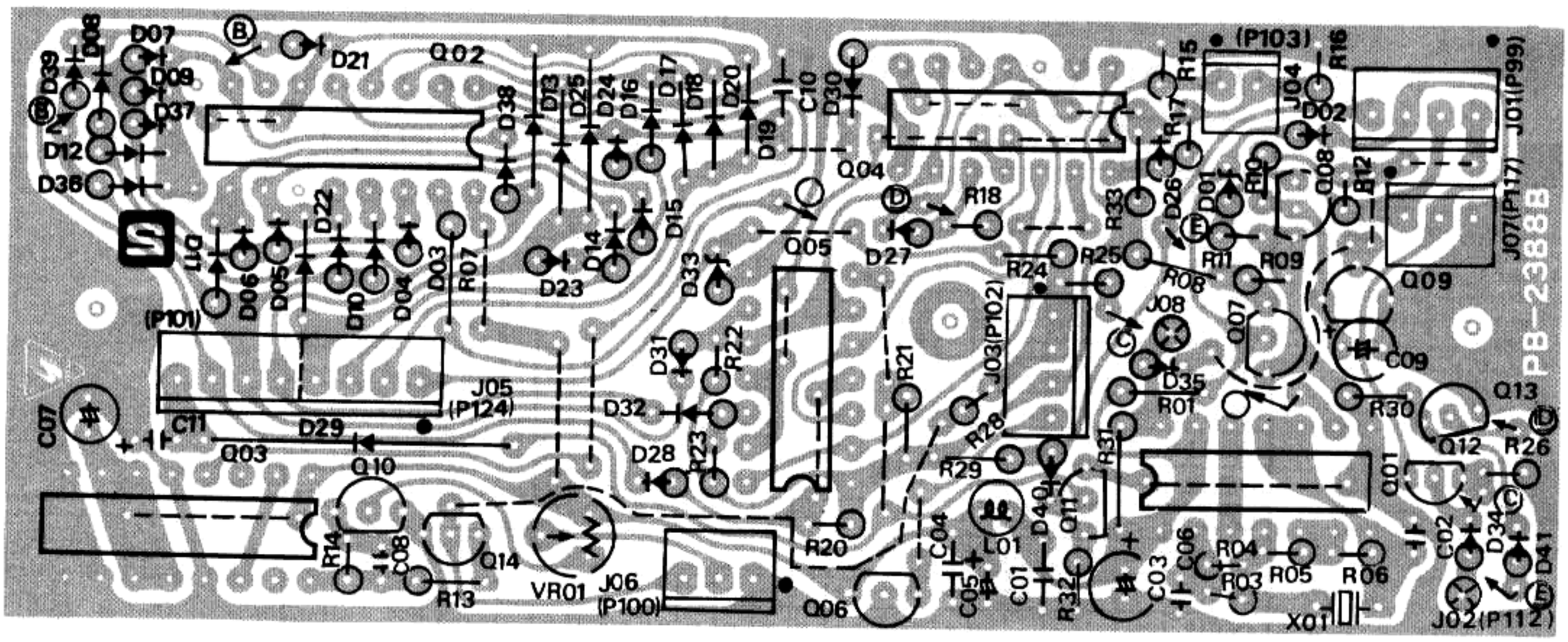

Viewed from solder side

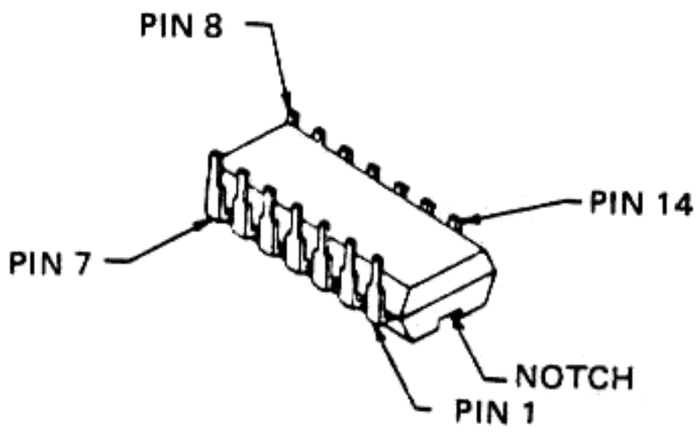

SN74LS00
SN74LS04
SN74LS09

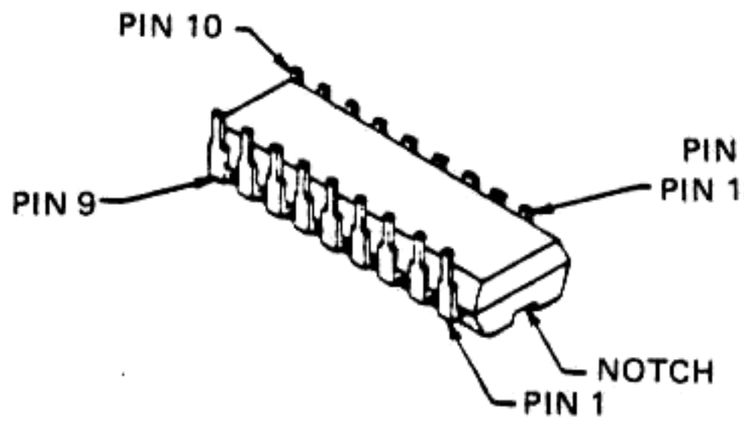

TC9122P

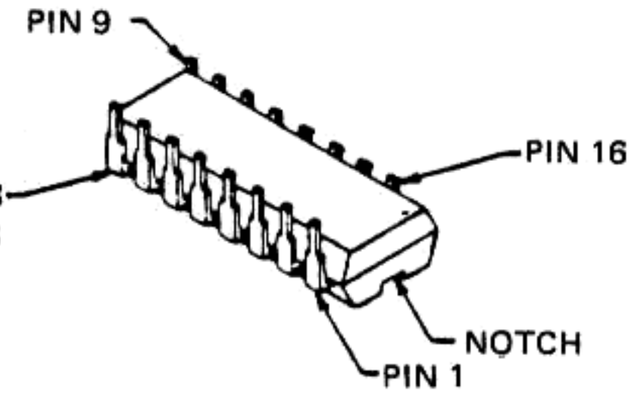

MC14027B

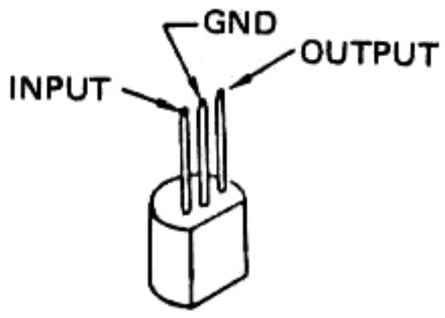

μPC78L05

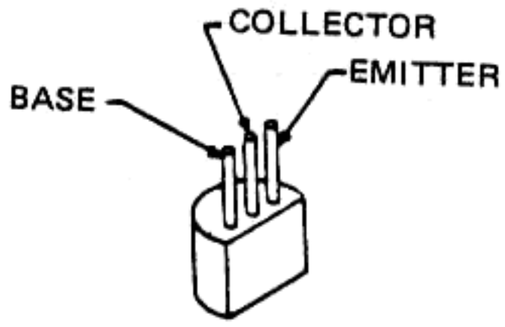

2SC1815GR

FSK UNIT

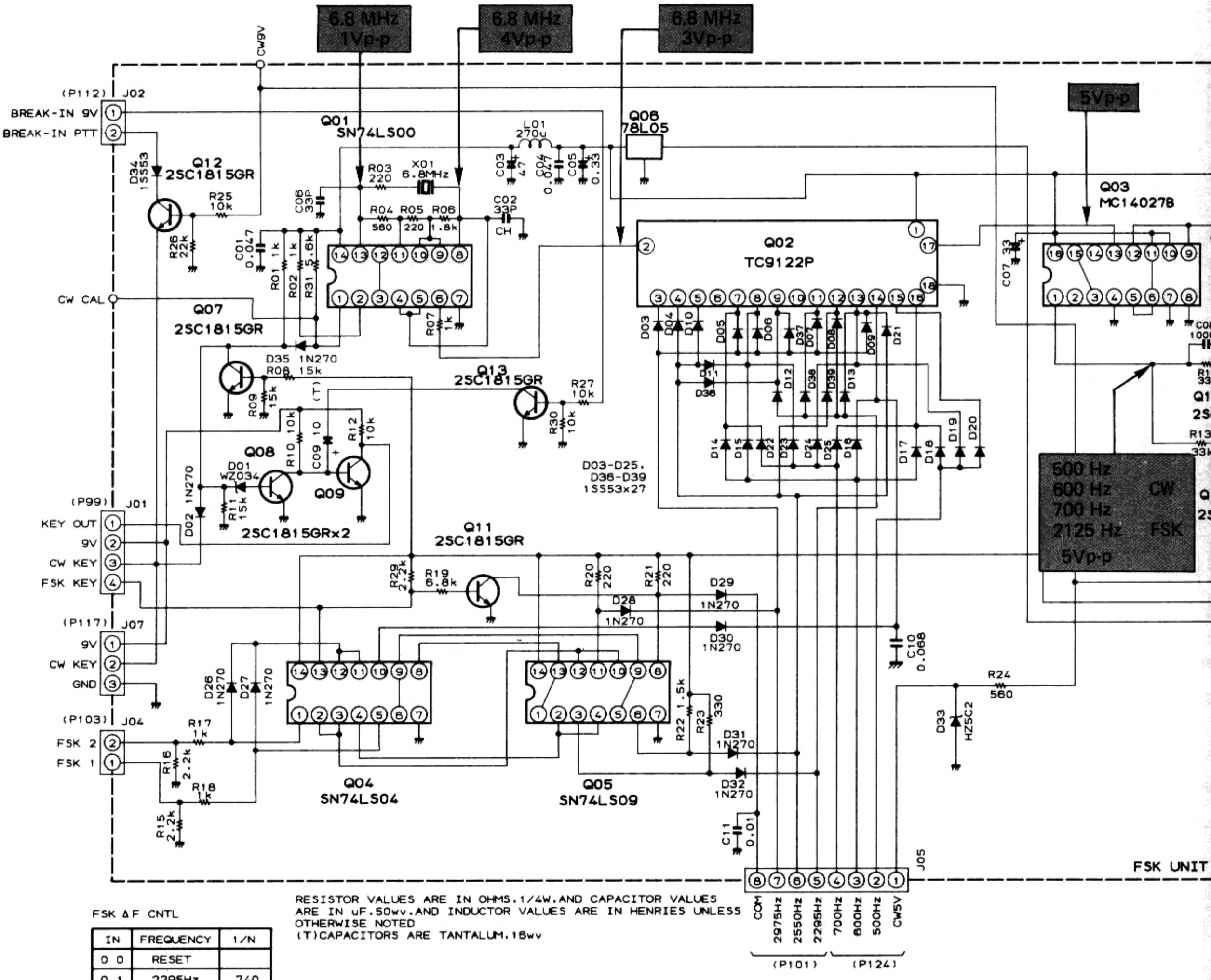

RESISTOR VALUES ARE IN OHMS.1/4W.AND CAPACITOR VALUES ARE IN uF.50wv.AND INDUCTOR VALUES ARE IN HENRIES UNLESS OTHERWISE NOTED
(T)CAPACITORS ARE TANTALUM.16wv

FSK ΔF CNTL

IN	FREQUENCY	1/N
0 0	RESET	
0 1	2295Hz	740
1 0	2550Hz	866
1 1	2975Hz	571
CW	500Hz	3400
	800Hz	2830
	700Hz	2430

FSK UNIT VOLTAGE CHART

(DC VOLTS)

	E (S)		C (D)		B (G1)		(G2)		REMARKS	
	R	T	R	T	R	T	R	T		
Q1807	0		3		0					CW BREAK-IN
Q1808	0		0		0.6					
Q1809	0		5		0					
Q1811	0		0.6		0				FSK	
Q1812	6		13		6					
Q1813	0		0		0.6					

FSK UNIT VOLTAGE CHART

	1	2	3	4	5	6	7	8	9	10	11	12	13	14
Q1801	–	5	–	–	–	–	0	–	–	–	–	–	–	5
Q1802	5	–	–	–	–	–	–	–	–	–	–	–	–	–
Q1803	–	–	–	0	5	5	0	0	0	5	5	0	–	–
Q1804	–	–	–	–	–	–	0	–	–	–	–	–	–	5
Q1805	–	–	–	–	–	–	0	–	–	–	–	–	–	5

FSK UNIT

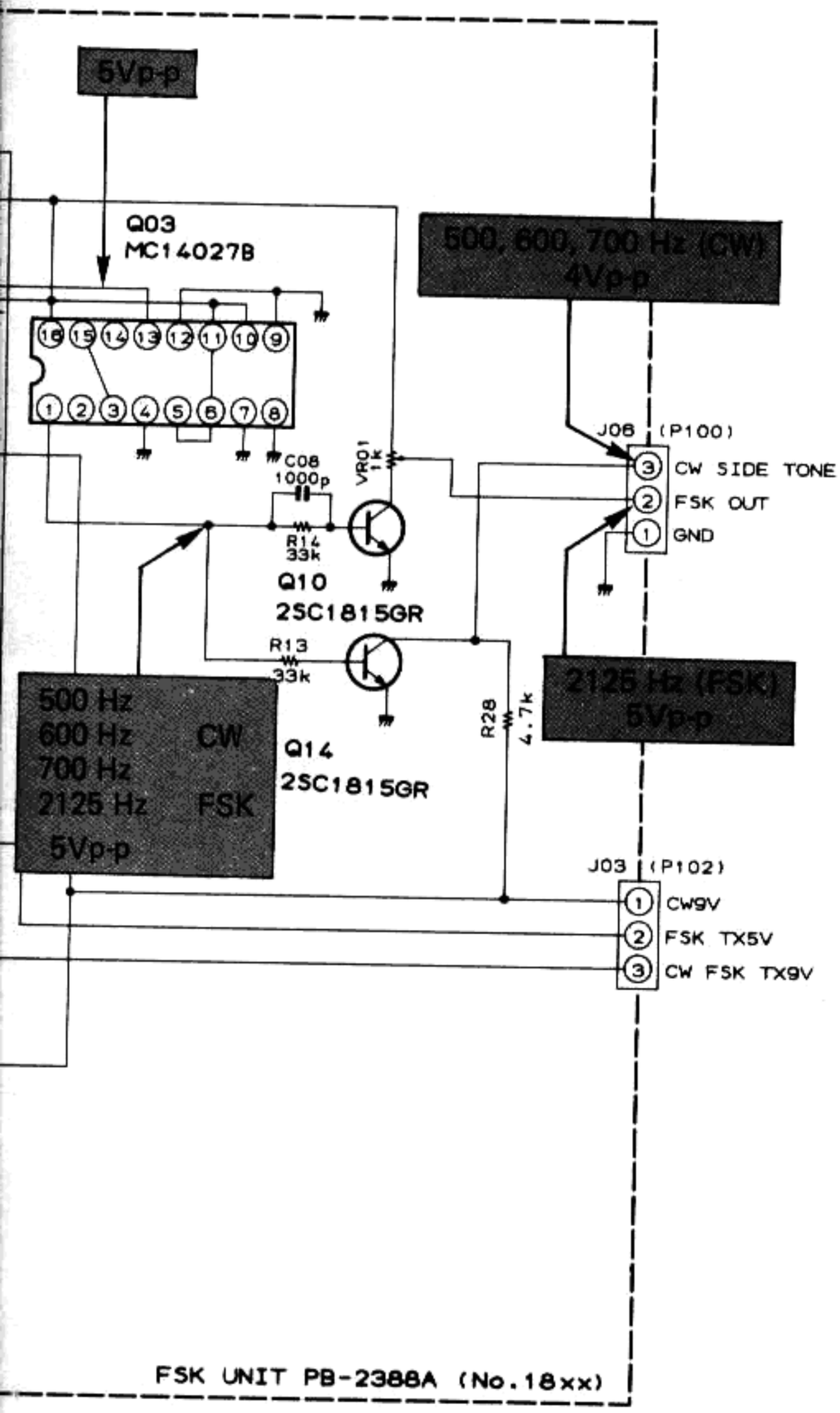

CW BREAK IN

CHART

(DC VOLTS)

8	9	10	11	12	13	14	15	16	17	18	REMARKS
–	–	–	–	–	–	5					
–	–	–	–	–	–	–	–	–	–	0	
0	0	5	5	0	–	–	–	5			
–	–	–	–	–	–	5					
–	–	–	–	–	–	5					

LPF UNIT PARTS LAYOUT

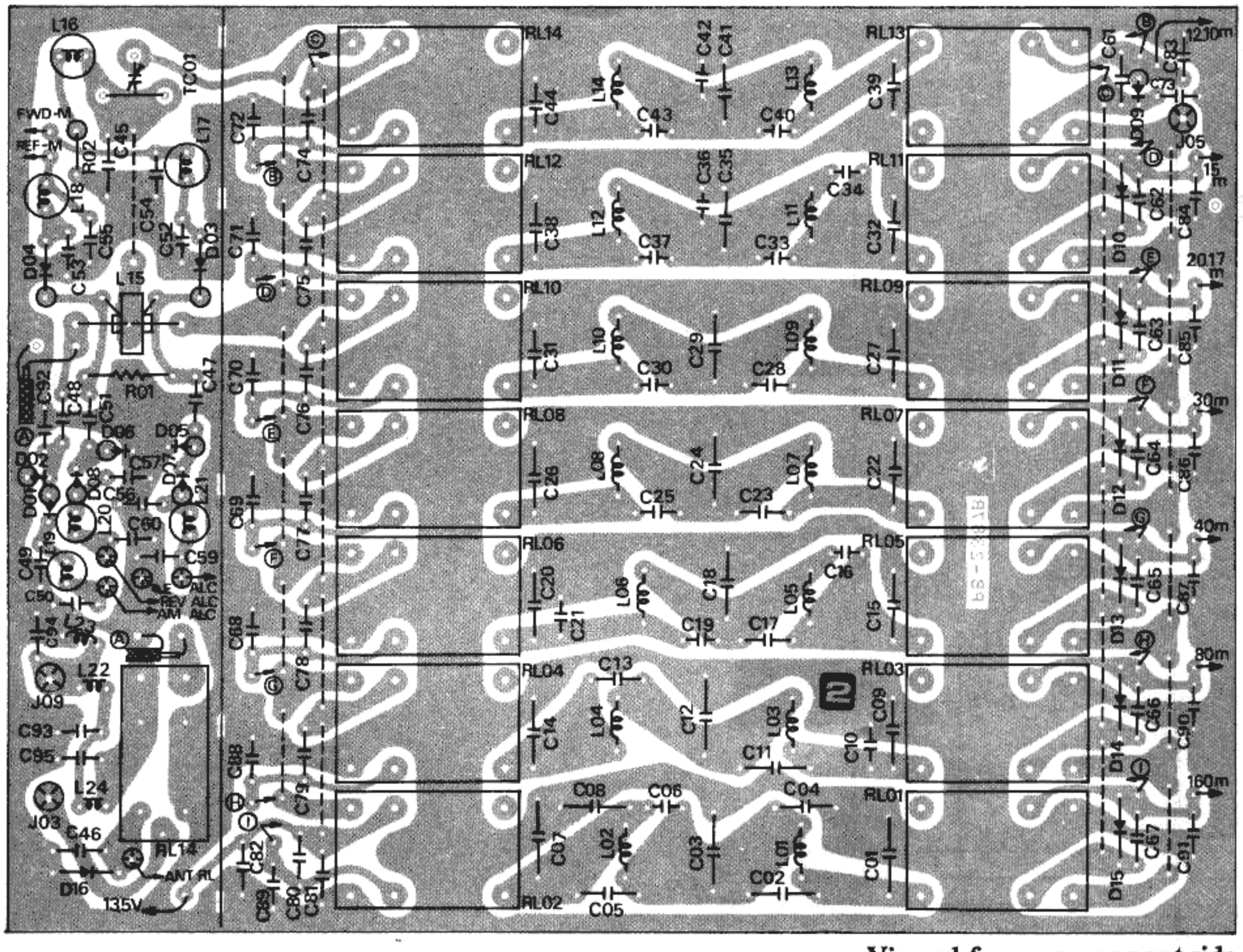

Viewed from component side

Viewed from solder side

LPF UNIT

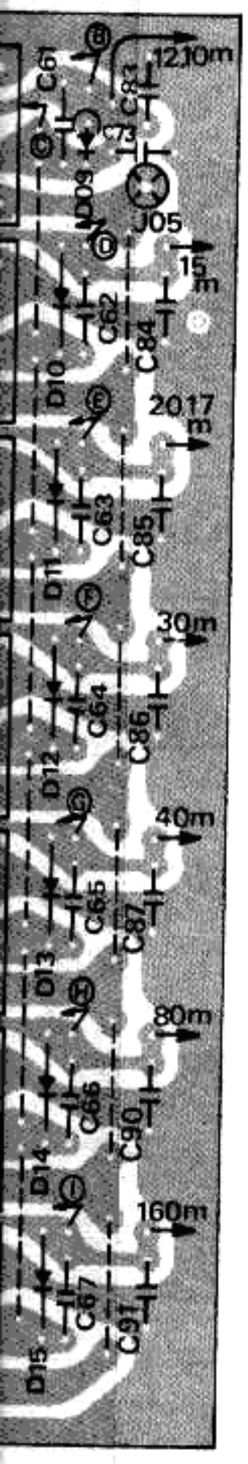

Component side



Solder side

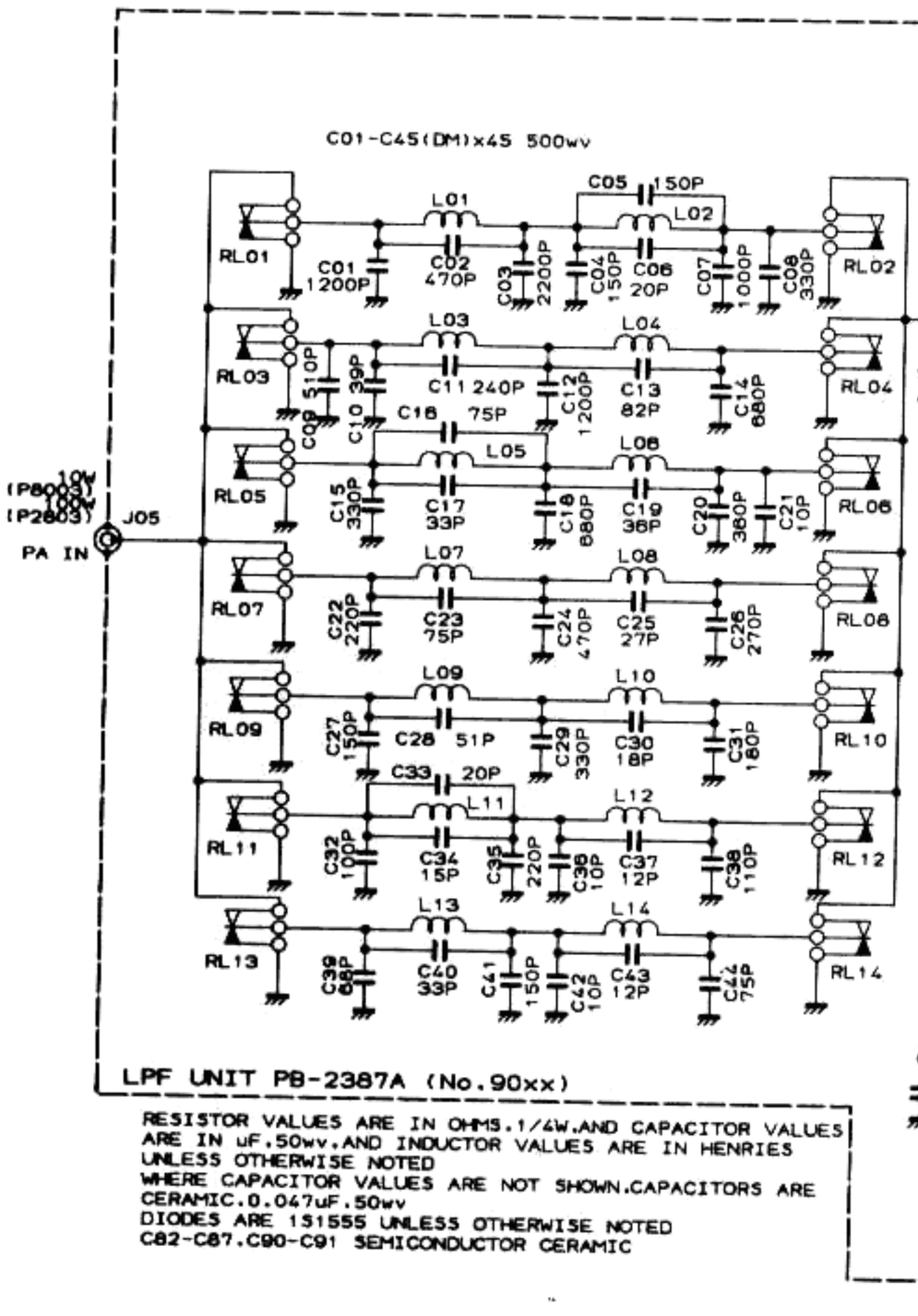

LPF UNIT PB-2387A (No.90xx)

RESISTOR VALUES ARE IN OHMS.1/4W.AND CAPACITOR VALUES ARE IN uF.50wv.AND INDUCTOR VALUES ARE IN HENRIES UNLESS OTHERWISE NOTED
WHERE CAPACITOR VALUES ARE NOT SHOWN.CAPACITORS ARE CERAMIC.0.047uF.50wv
DIODES ARE 1S1555 UNLESS OTHERWISE NOTED
C82-C87.C90-C91 SEMICONDUCTOR CERAMIC

RELAY UNIT PARTS LAYOUT

Viewed from component side

Viewed from solder side

PROTECTOR UNIT PARTS LAYOUT

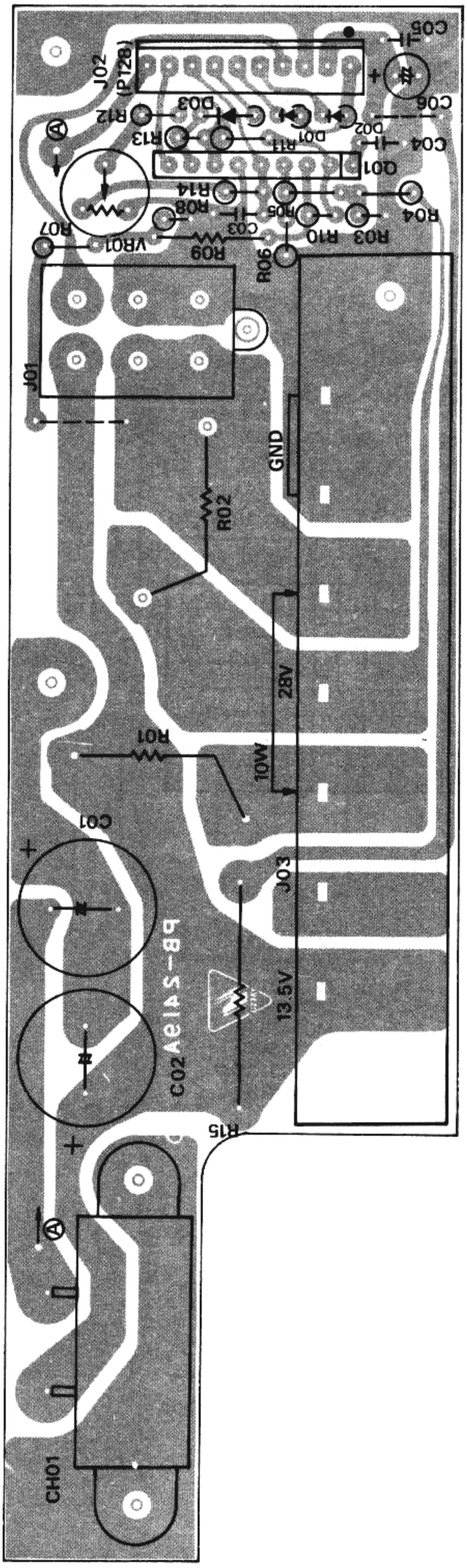

Viewed from component side

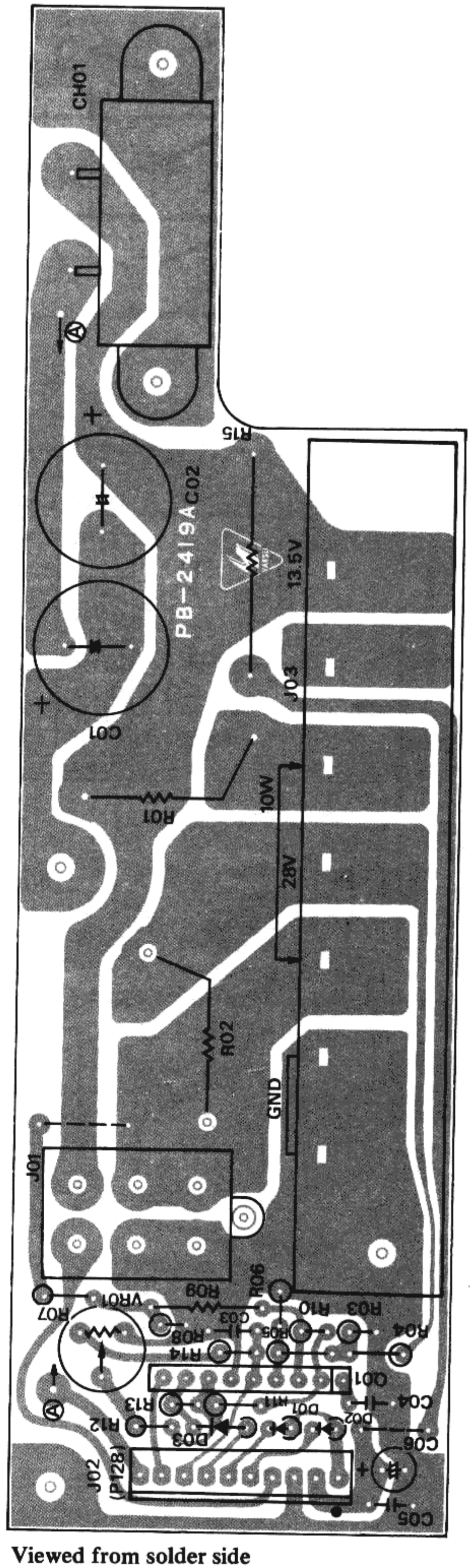

Viewed from solder side

PROTECTOR UNIT

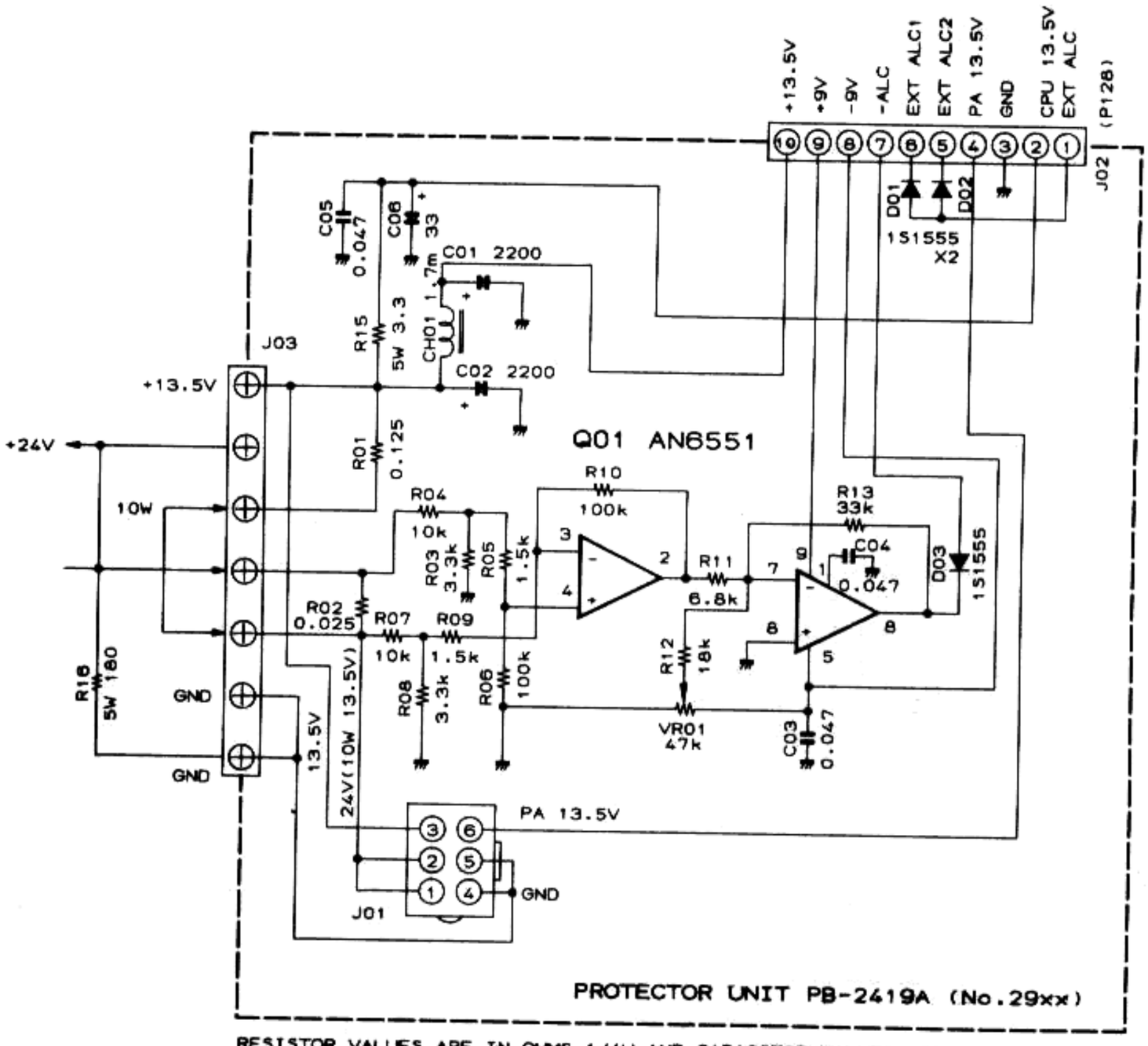

RESISTOR VALUES ARE IN OHMS.1/4W.AND.CAPACITOR VALUES ARE IN uF.50wv.AND.
INDUCTOR VALUES ARE IN HENRIES.UNLESS OTHERWISE NOTED

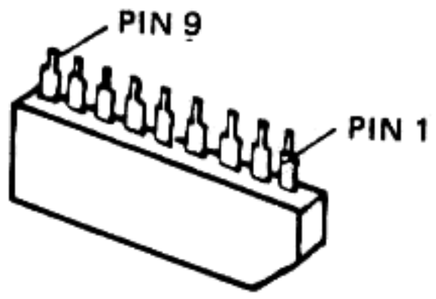

AN6551

PROTECTOR UNIT VOLTAGE CHART (DC VOLTS)

	1	2	3	4	5	6	7	8	9	REMARKS
Q2901	9	–	–	5.7	–9	0	–	–	9	

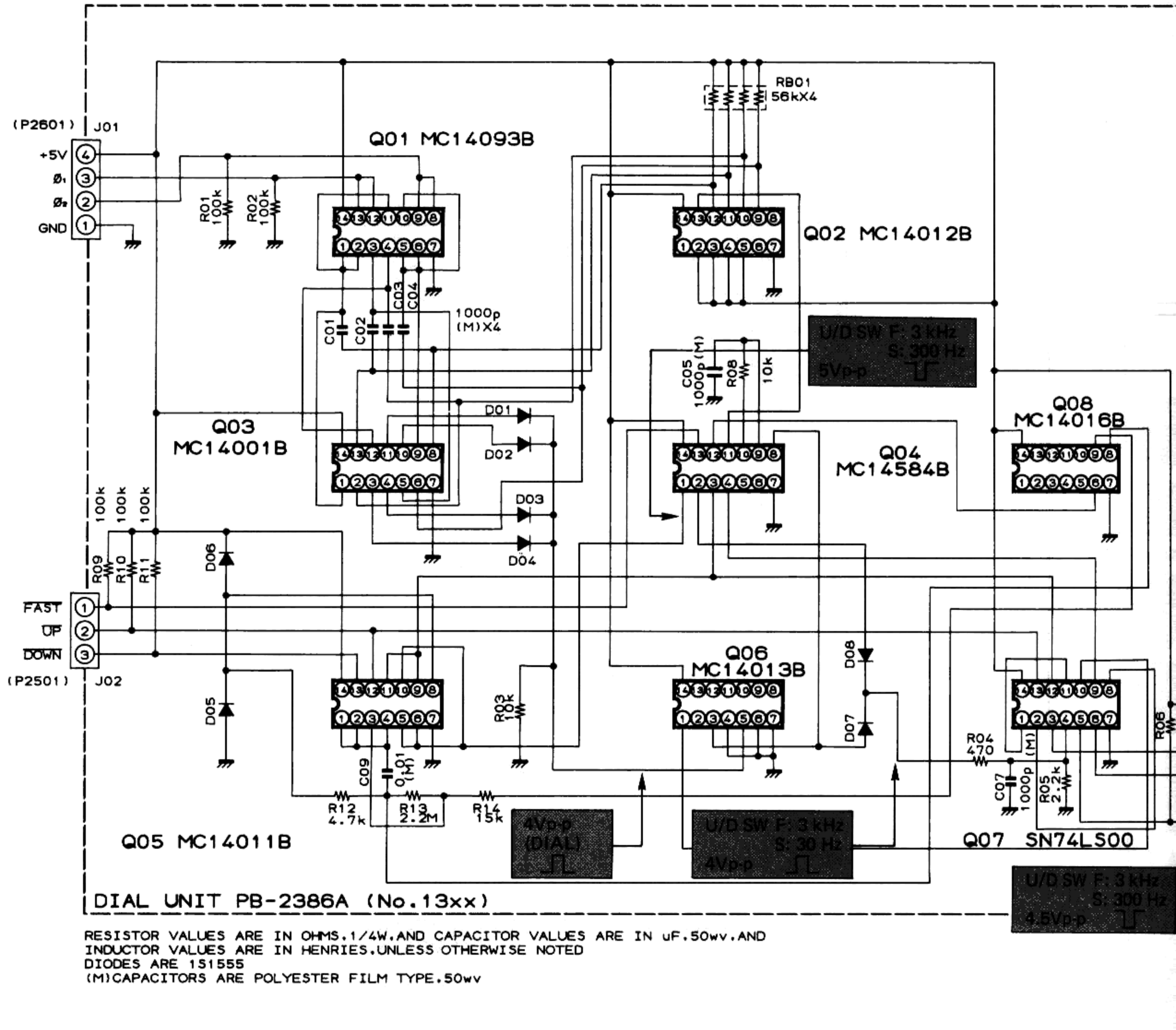

RESISTOR VALUES ARE IN OHMS.1/4W.AND CAPACITOR VALUES ARE IN uF.50wv.AND
INDUCTOR VALUES ARE IN HENRIES.UNLESS OTHERWISE NOTED
DIODES ARE 151555
(M)CAPACITORS ARE POLYESTER FILM TYPE.50wv

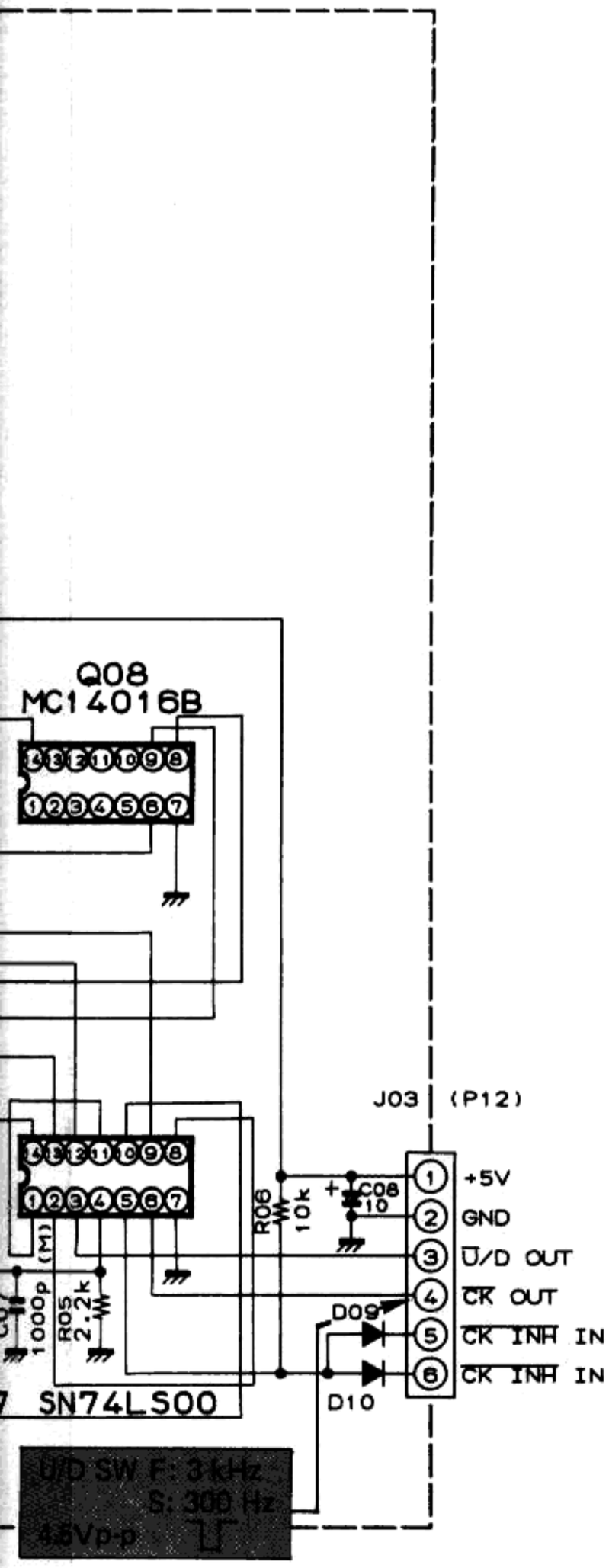

DIAL UNIT VOLTAGE CHART

(DC VOLTS)

	1	2	3	4	5	6	7	8	9	10	11	12	13	14	REMARKS
Q1301	–	–	–	–	–	–	0	–	–	–	–	–	–	5	
Q1302	–	5	5	5	5	–	0	–	–	–	–	–	–	5	
Q1303	–	–	–	–	–	–	0	–	–	–	–	–	–	5	
Q1304	–	–	–	–	–	–	0	–	–	–	–	–	–	5	
Q1305	–	–	–	–	–	–	0	–	–	–	–	–	–	5	
Q1306	–	–	–	0	–	–	0	–	–	–	–	–	–	5	
Q1307	–	–	–	–	–	–	0	–	–	–	–	–	–	5	
Q1308	–	–	–	–	–	–	0	–	–	–	–	–	–	5	

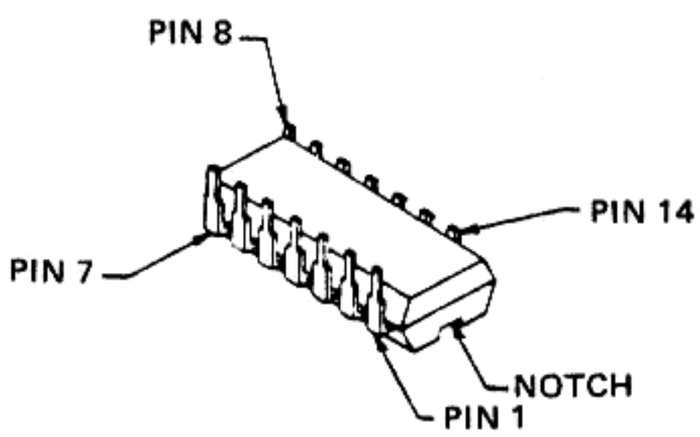

SN74LS00
MC14093B
MC14012B
MC14001B
MC14584B
MC14011B
MC14013B
MC14016B

DIAL UNIT PARTS LAYOUT

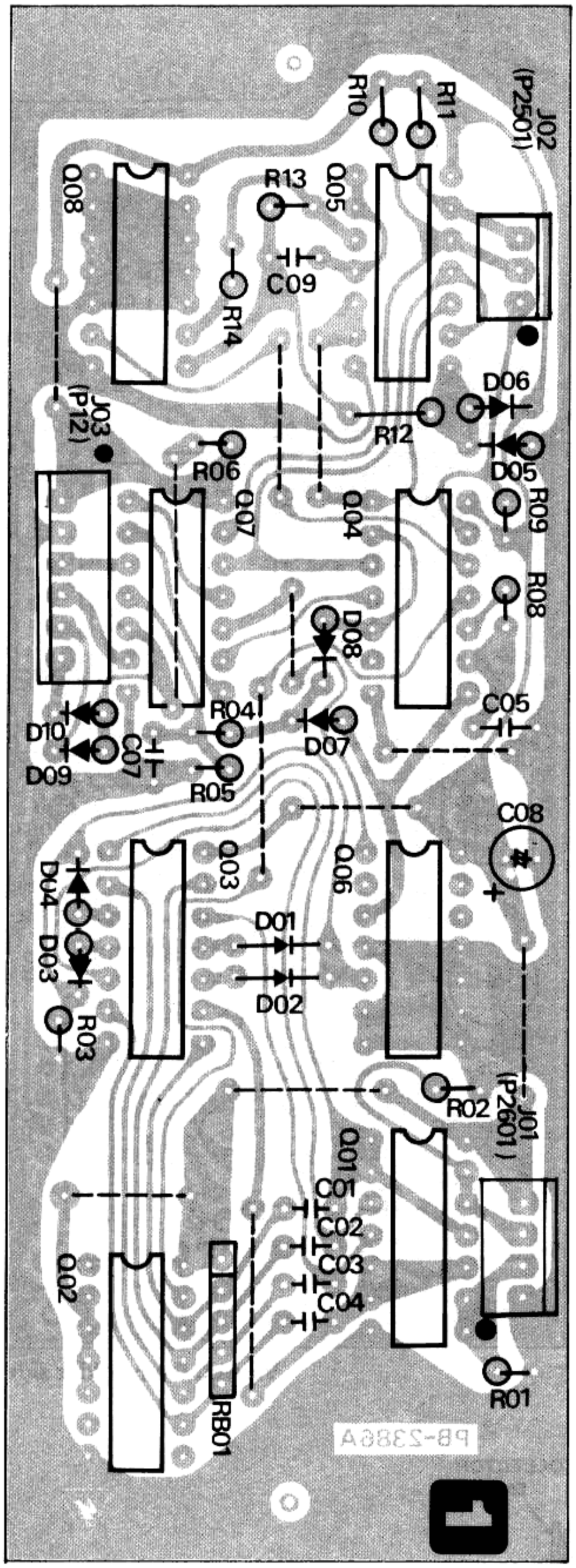

Viewed from component side

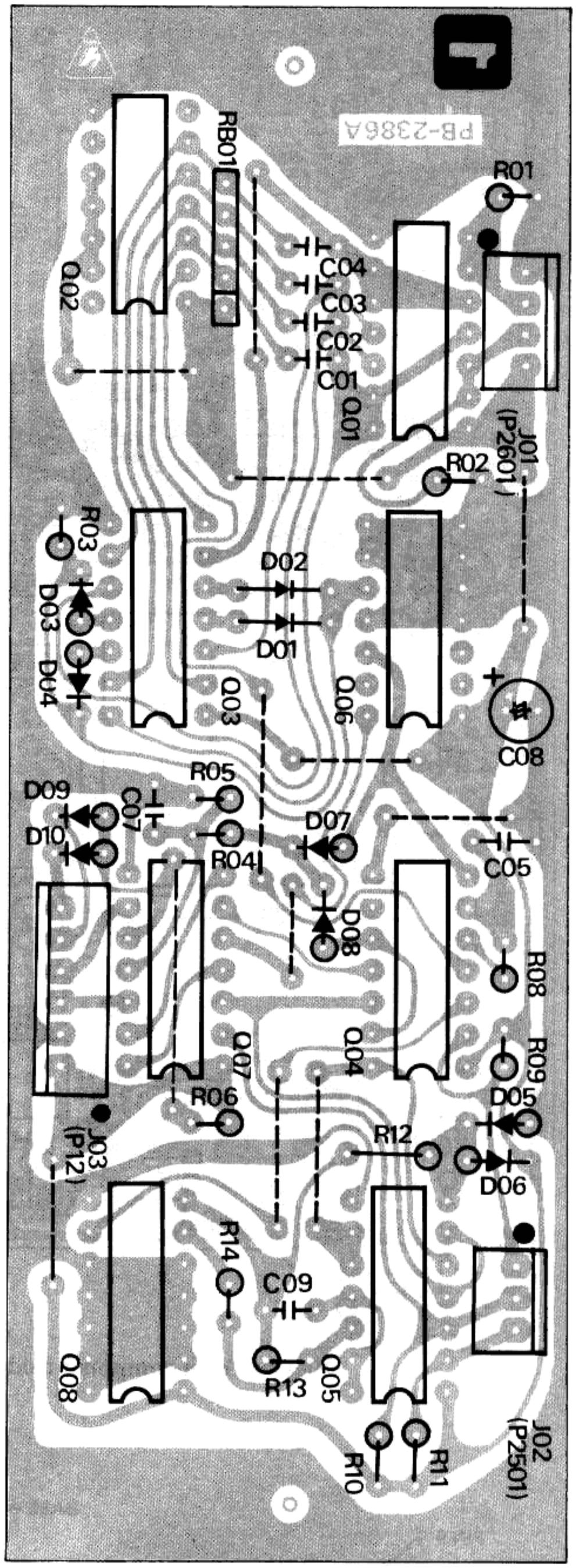

Viewed from solder side

REG UNIT PARTS LAYOUT

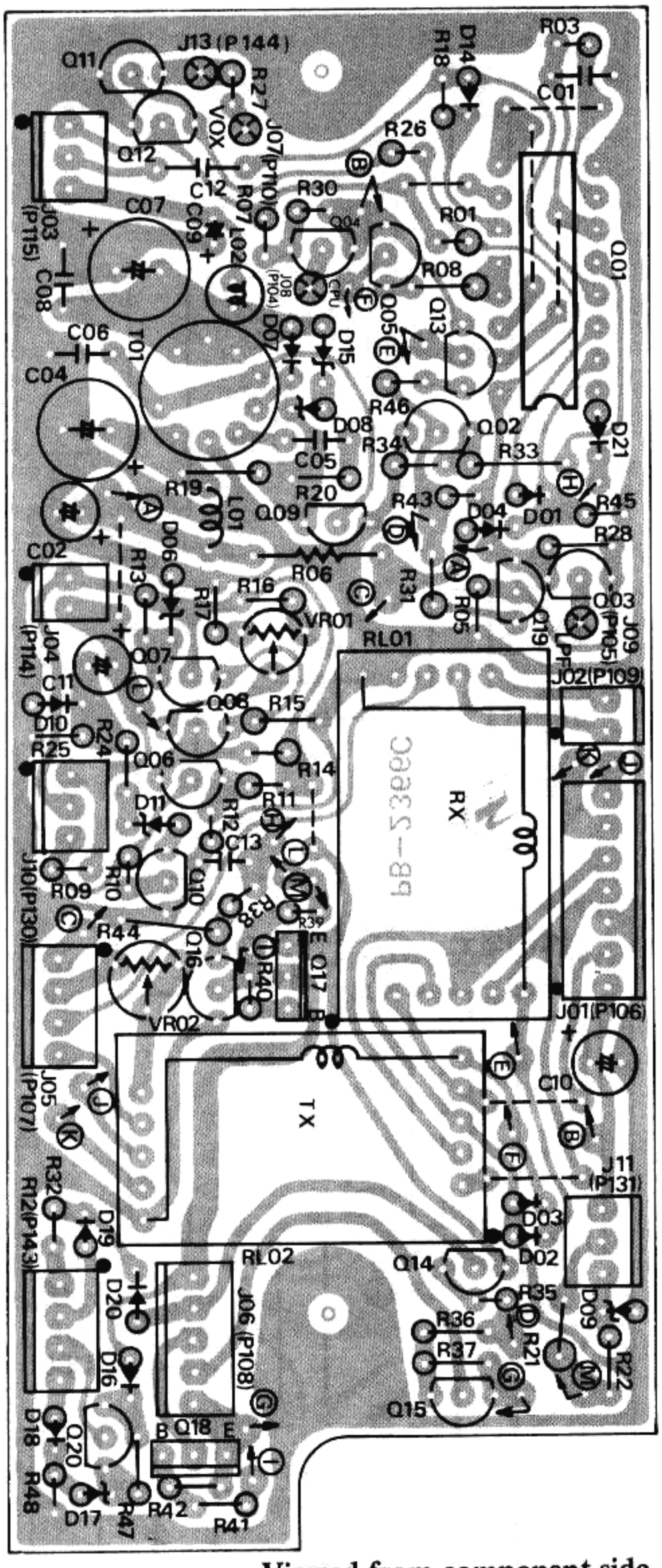

Viewed from component side

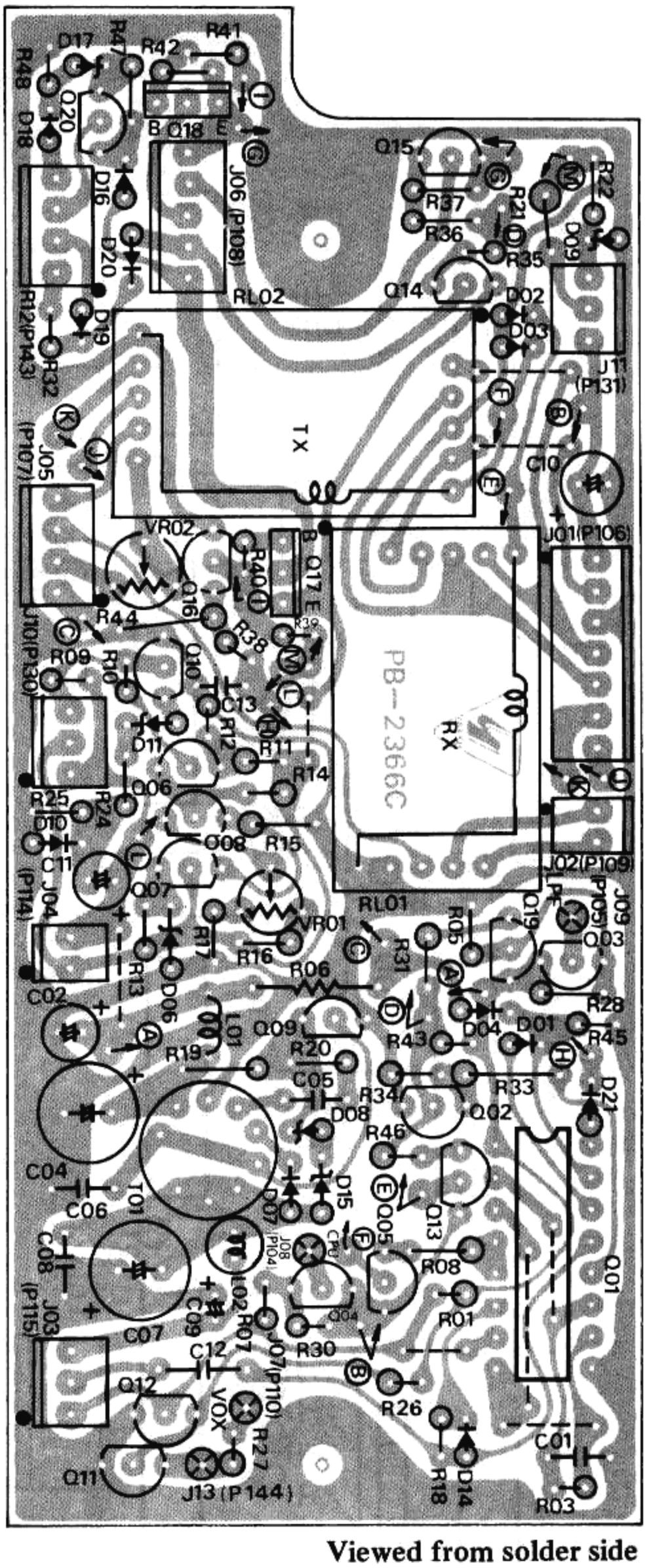

Viewed from solder side

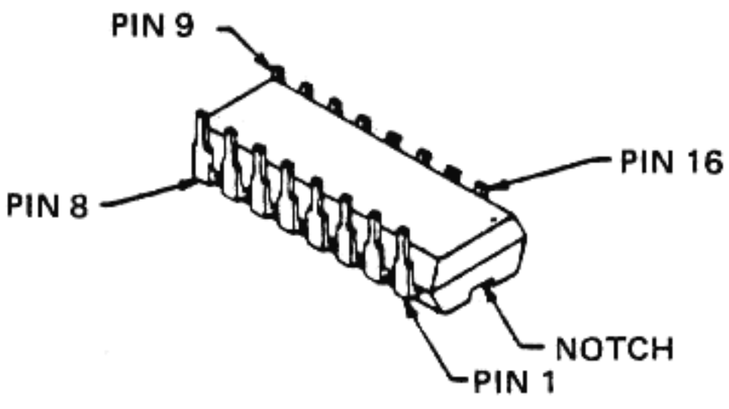

MC14572UB

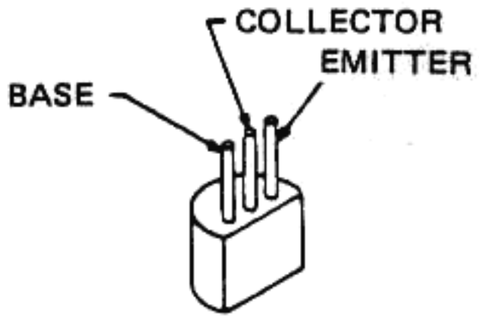

2SC733AQ
2SA950Y
2SC945AQ
2SC1815Y
2SC1815GR
2SC2002L

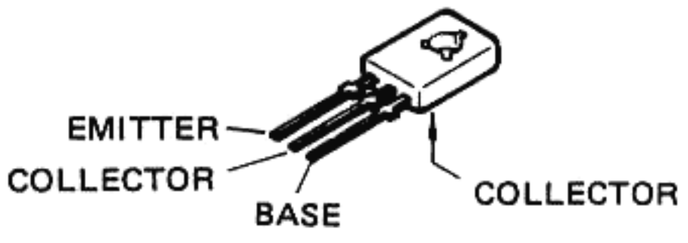

2SA496Y

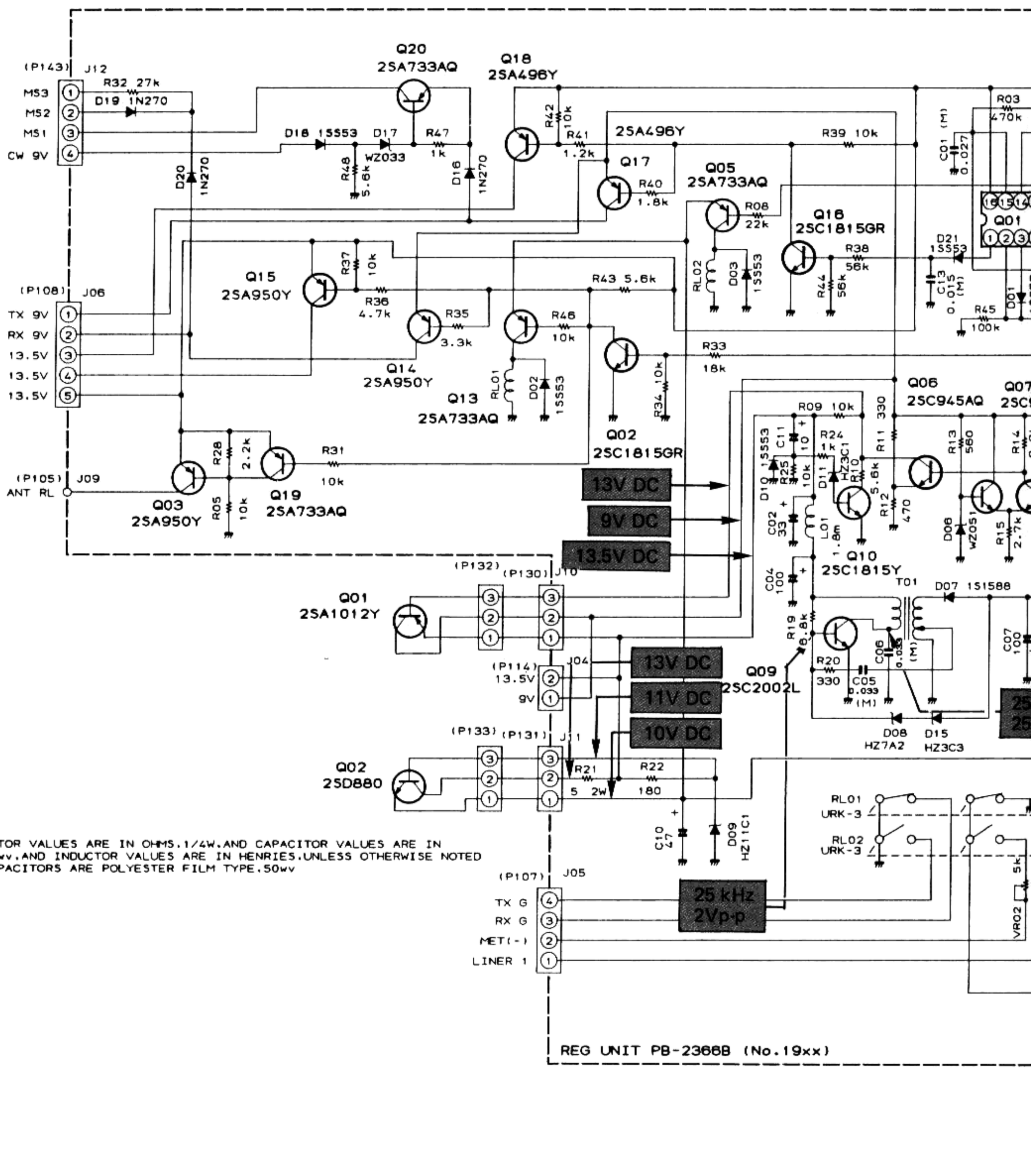

RESISTOR VALUES ARE IN OHMS.1/4W.AND CAPACITOR VALUES ARE IN uF.50wv.AND INDUCTOR VALUES ARE IN HENRIES.UNLESS OTHERWISE NOTED
(M)CAPACITORS ARE POLYESTER FILM TYPE.50wv

REG UNIT PB-2366B (No.19xx)

REG UNIT

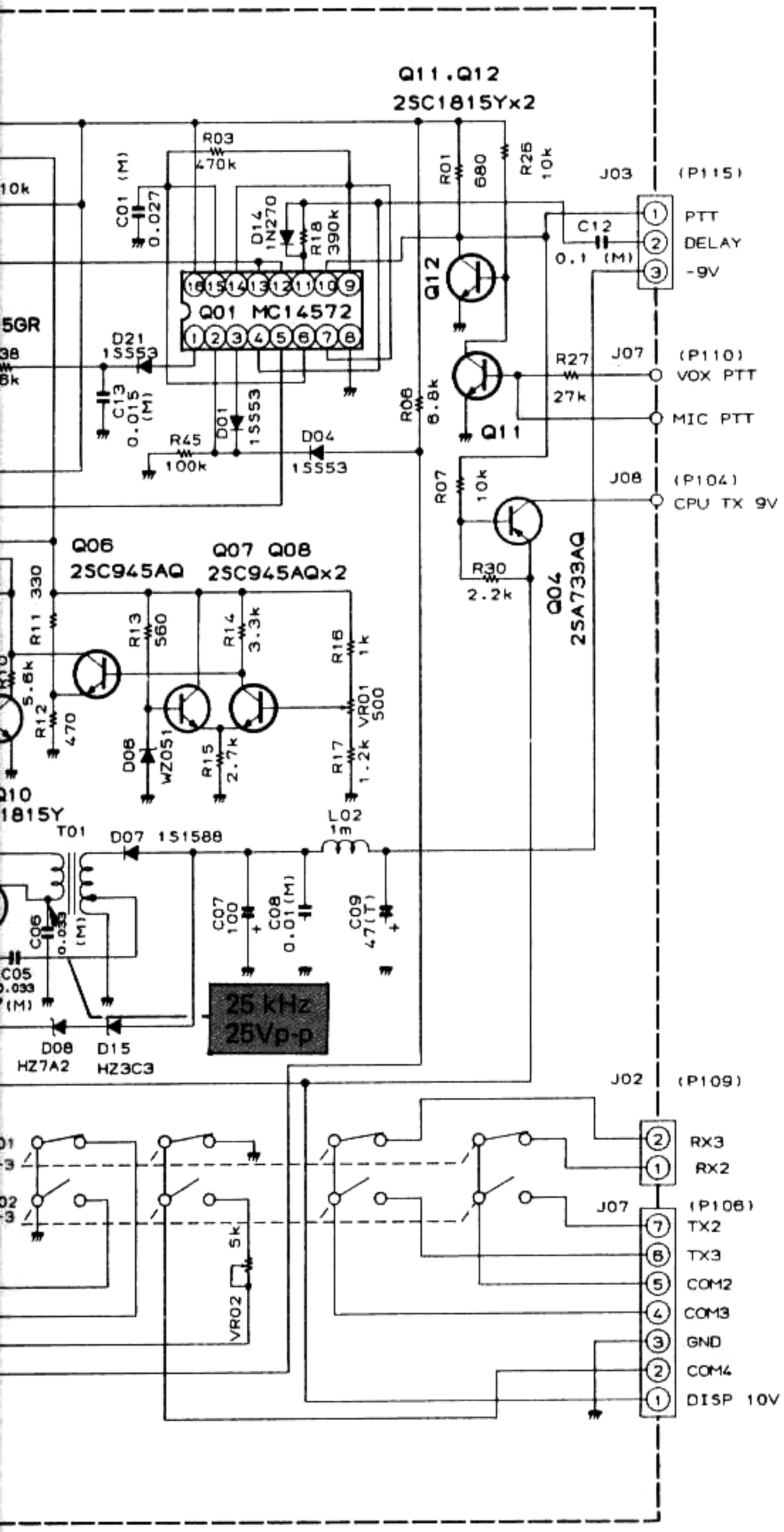

REG UNIT VOLTAGE CHART

(DC VOLTS)

	E (S)		C (D)		B (G1)		(G2)		REMARKS
	R	T	R	T	R	T	R	T	
Q1902	0	0	0	13.5	0.6	0			
Q1903	13.5	13.5	0	13.5	13.5	13			
Q1904	10	10	0	10	11	10			
Q1905	10	10	0	10	13	10			
Q1906	6		13.5		6				
Q1907	5		9		5				
Q1908	5		6		5				
Q1910	0		13.5		0				
Q1911	0		0		0.7				
Q1912	0	0	13.5	0	0	0			
Q1913	10	10	10	0	10	13.5			
Q1914	9	9	9	–8	8	13.5			
Q1915	13.5	13.5	13.5	0	13	13.5			
Q1916	0	0	13.5	0	0	0.7			
Q1917	9	9	0	9	13.5	8			
Q1918	13.5	13.5	0	13.5	13.5	13			
Q1919	13.5	13.5	13.5	13	13	13.5			
Q1920	0	9	0	9	–0.5	8			
	0	7	–8	9	0	8			MONI → ON

REG UNIT VOLTAGE CHART

(DC VOLTS)

	1	2	3	4	5	6	7	8	9	10	11	12	13	14	15	16	REMARKS	
Q1901	0	13	13.5	0	13.5	0	0	0	0	13.5	0	13.5	13.5	0	0	13.5	RX	LIN SW
	13.5	0	0	0	0	13.2	13.5	0	13.5	0	13.5	0	0	13.5	13.2	13.5	TX	→ 2

CONTROL UNIT

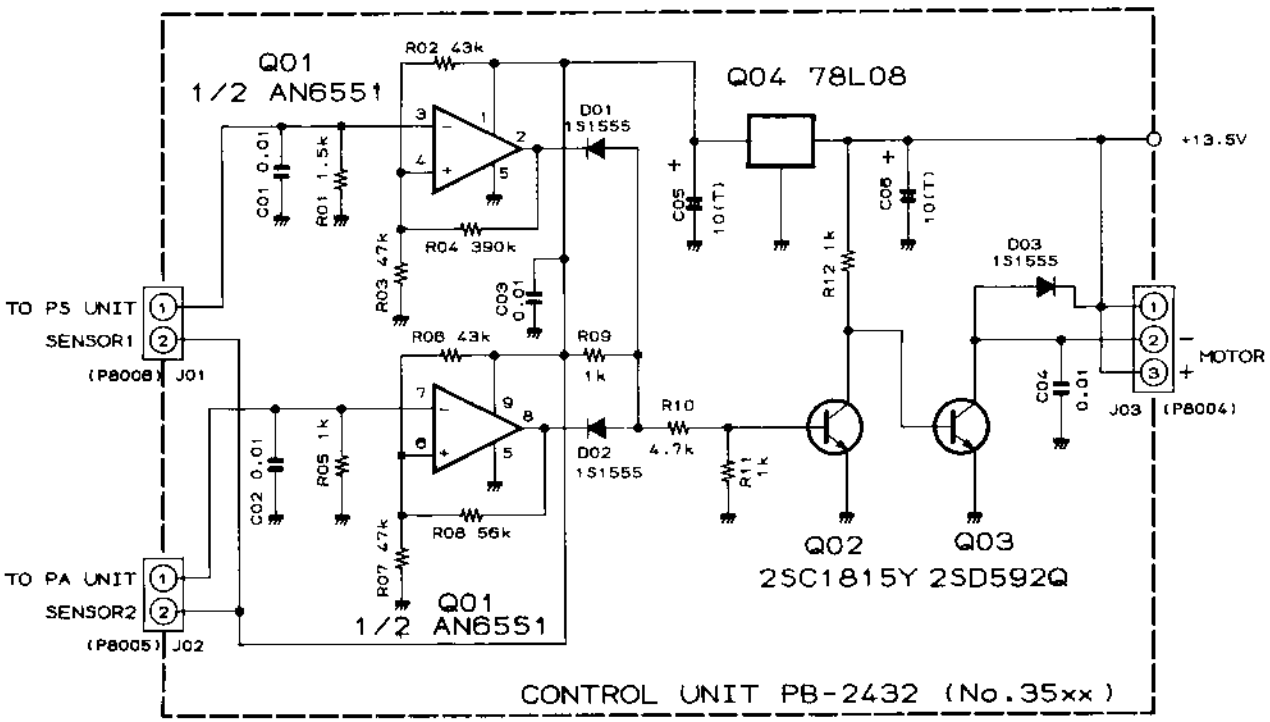

RESISTOR VALUES ARE IN OHMS, AND CAPACITOR VALUES ARE IN uF, 50wv, UNLESS OTHERWISE NOTED
(T)CAPACITORS ARE TANTALUM, 16wv

CONTROL UNIT VOLTAGE CHART

(DC VOLTS)

	1	2	3	4	5	6	7	8	9	REMARKS
Q3501	8	–	–	4.4	0	4.6	–	–	8	

CONTROL UNIT VOLTAGE CHART

(DC VOLTS)

	E (S)		C (D)		B (G1)		(G2)		REMARKS
	R	T	R	T	R	T	R	T	
Q3502	0		0		0.7				MOTOR OFF
Q3503	0		13.5		0				
Q3504	IN 13.5		COM 0		OUT 8				

CONTROL UNIT PARTS LAYOUT

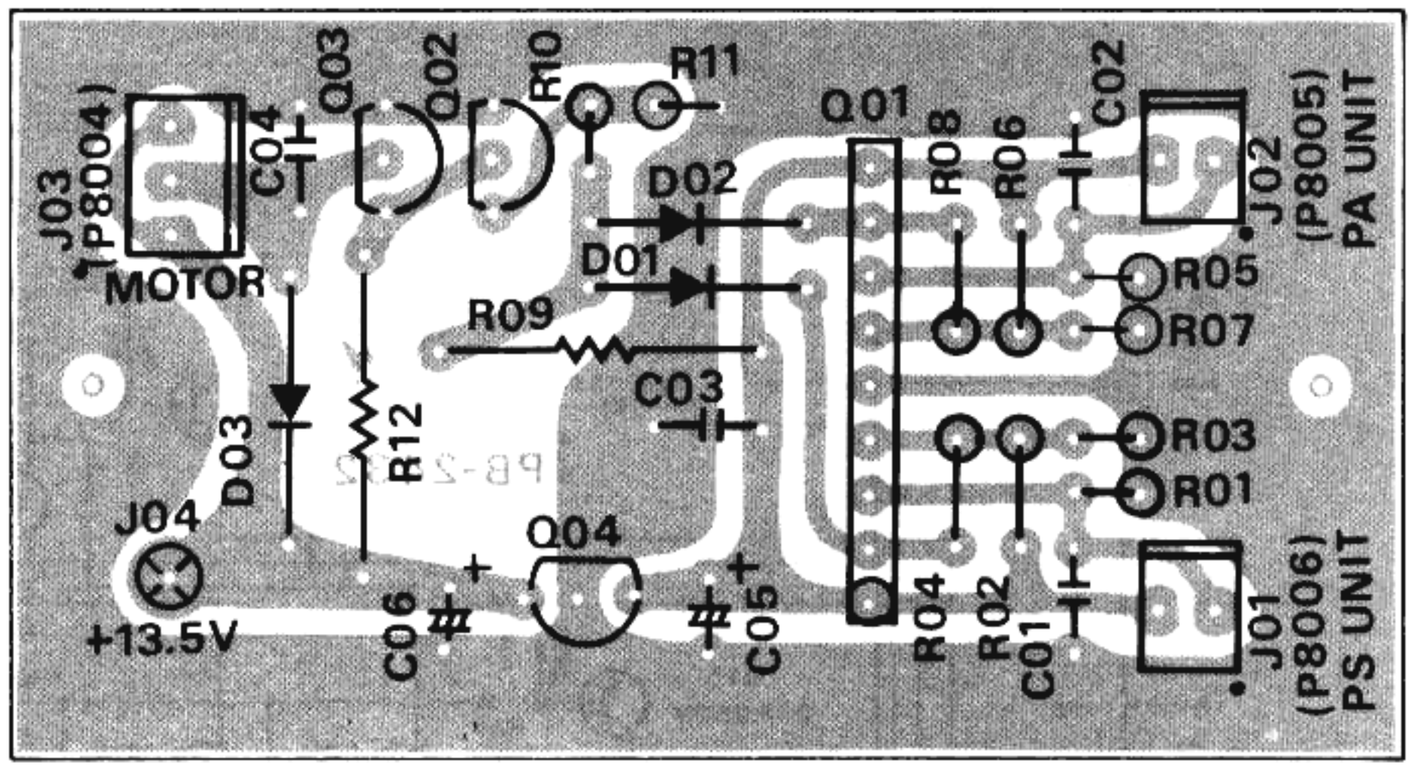

Viewed from component side

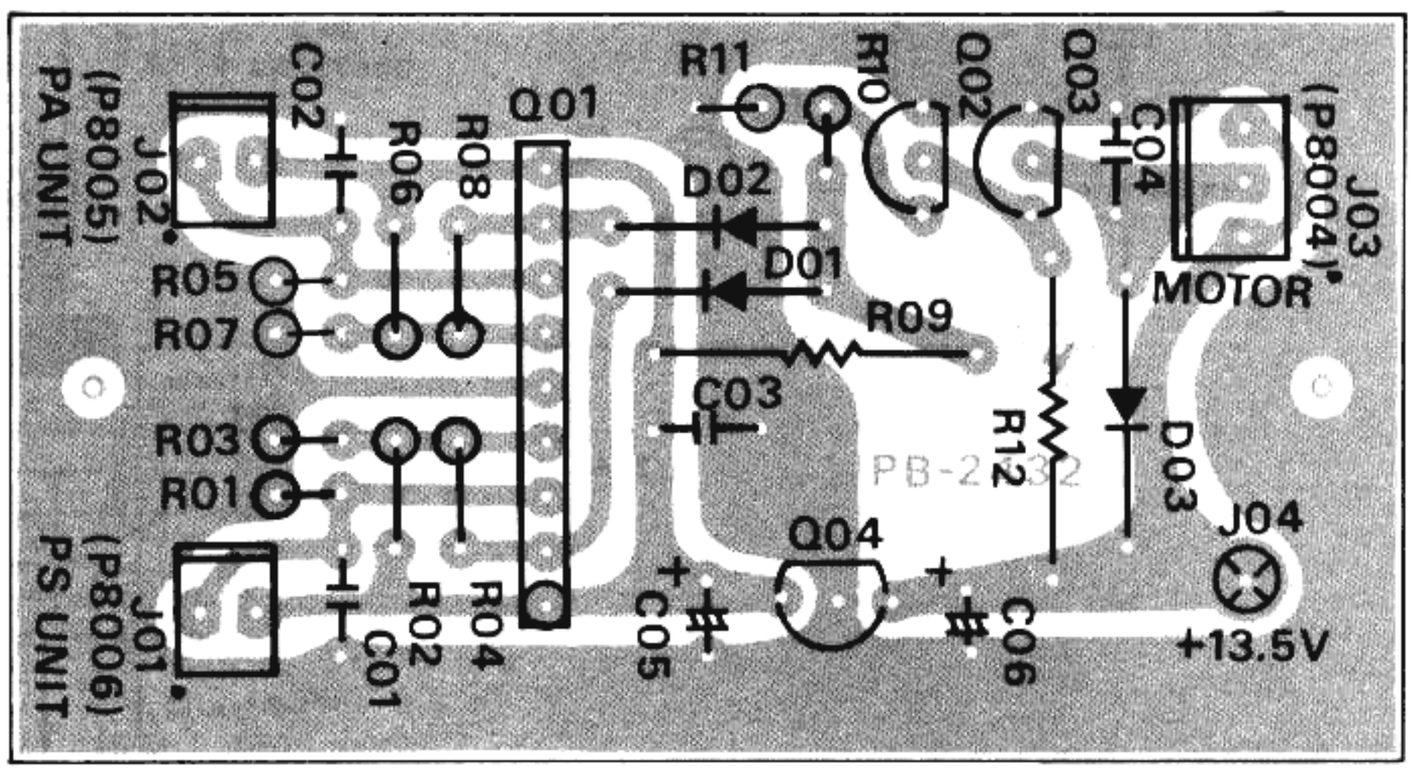

Viewed from solder side

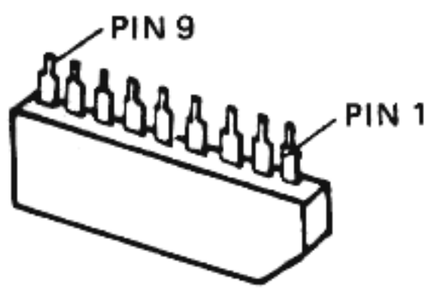

AN6551

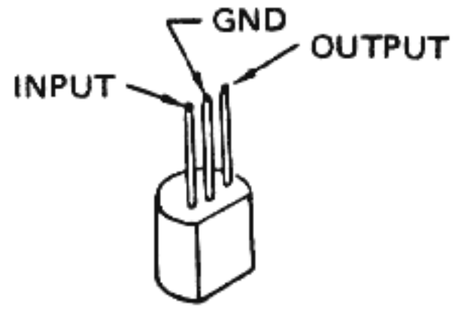

NJM78L08

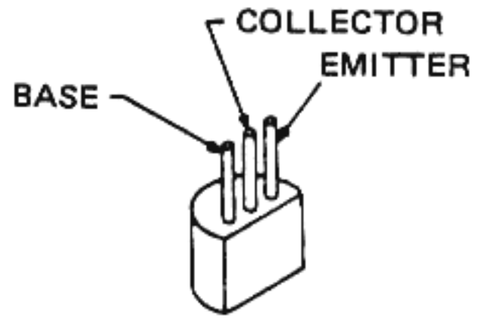

2SC1815Y
2SD592Q

KEY MATRIX UNIT PARTS LAYOUT

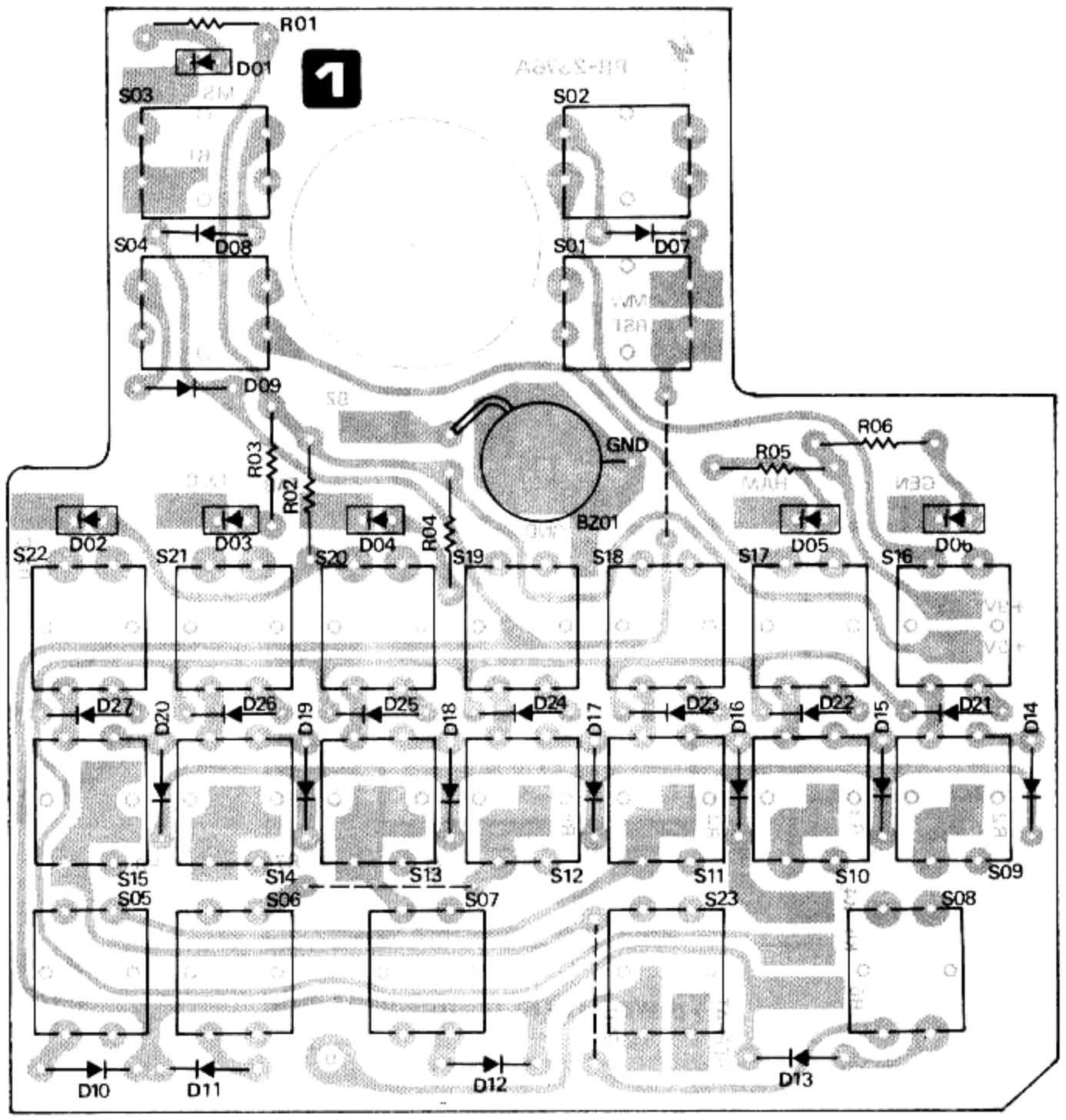

Viewed from component side

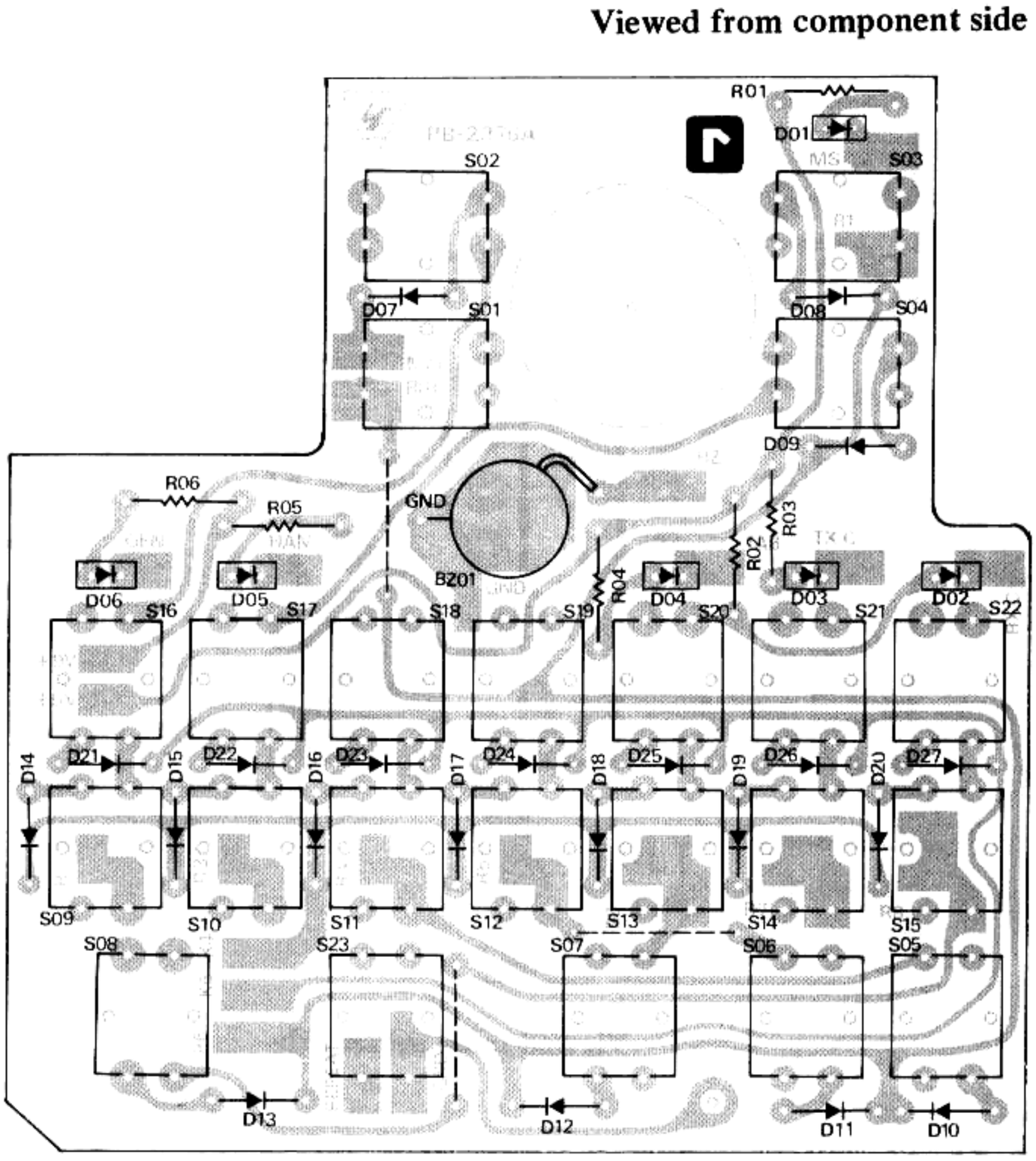

Viewed from solder side

KEY MATRIX UNIT

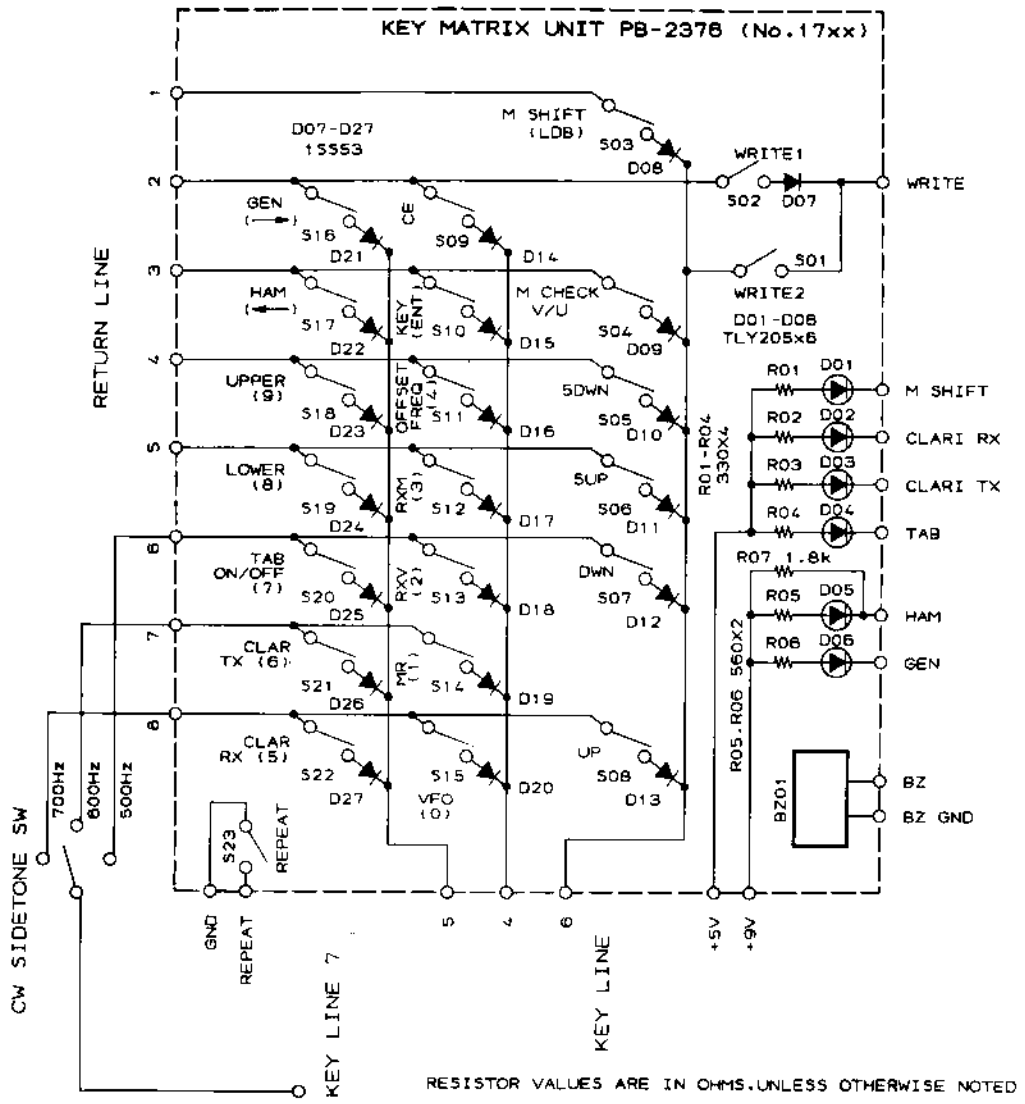

DISPLAY UNIT A PARTS LAYOUT

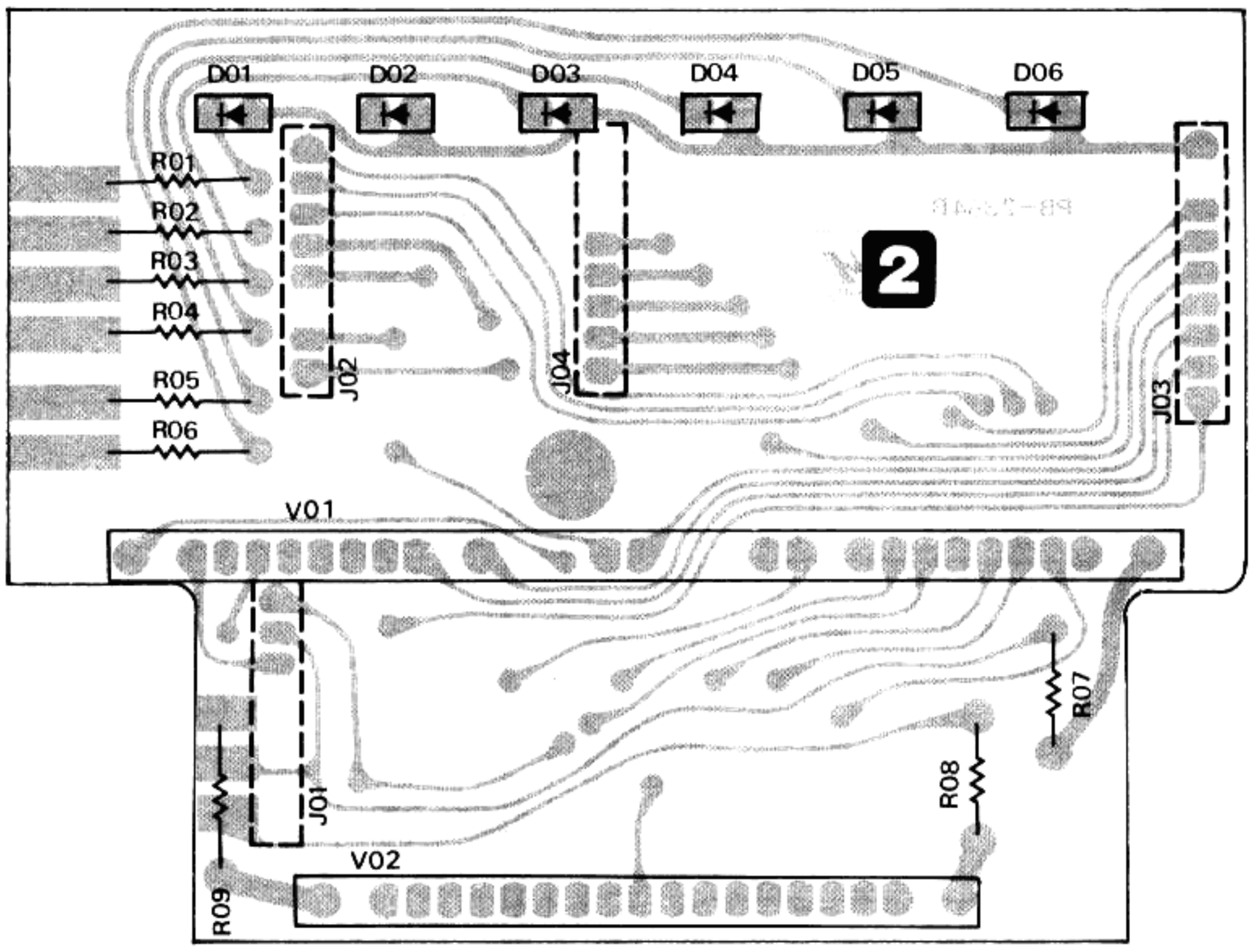

Viewed from component side

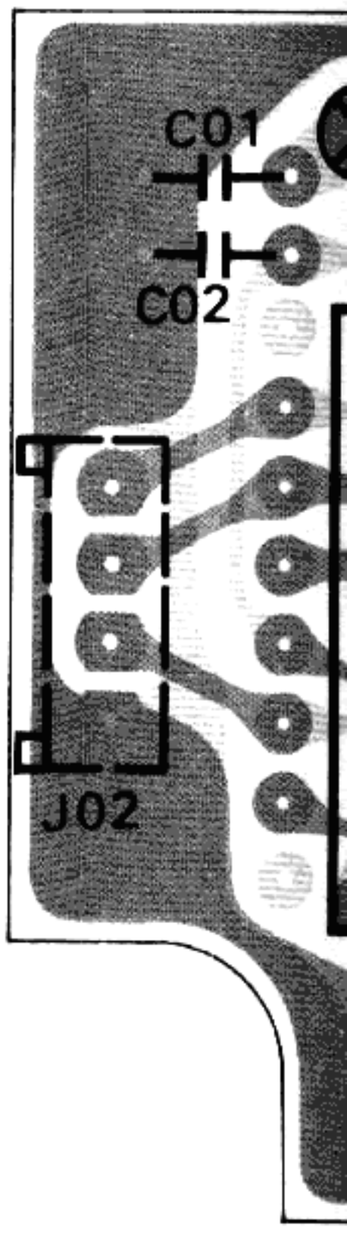

Viewed from solder side

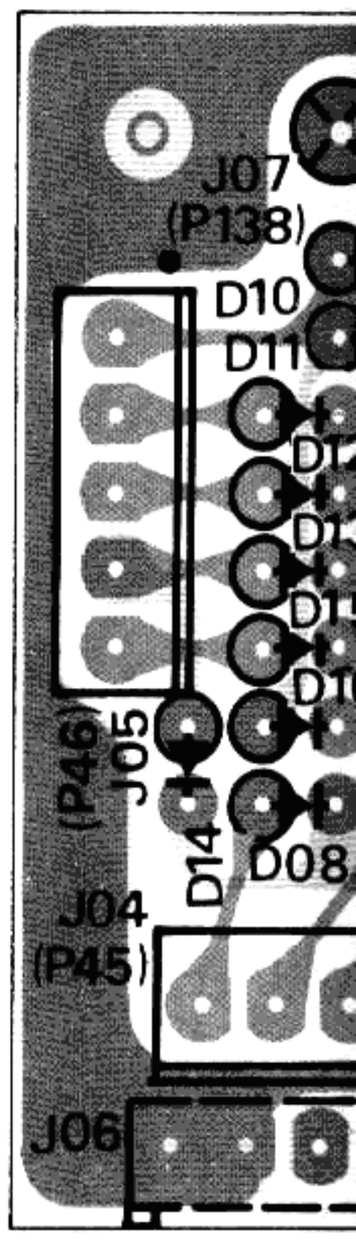

DISPLAY UNIT C PARTS LAYOUT

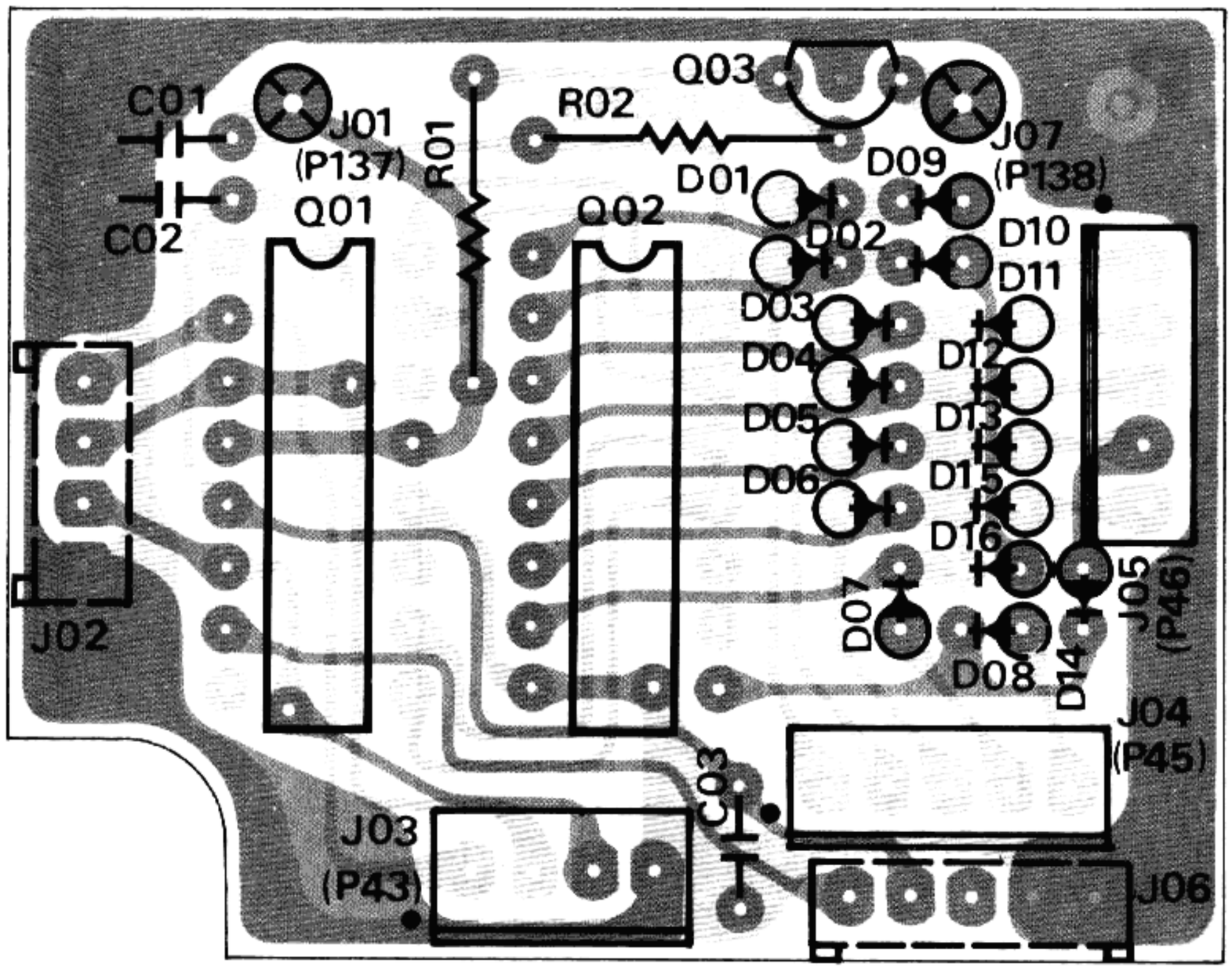

Viewed from component side

SN74LS75N
SN74LS145N

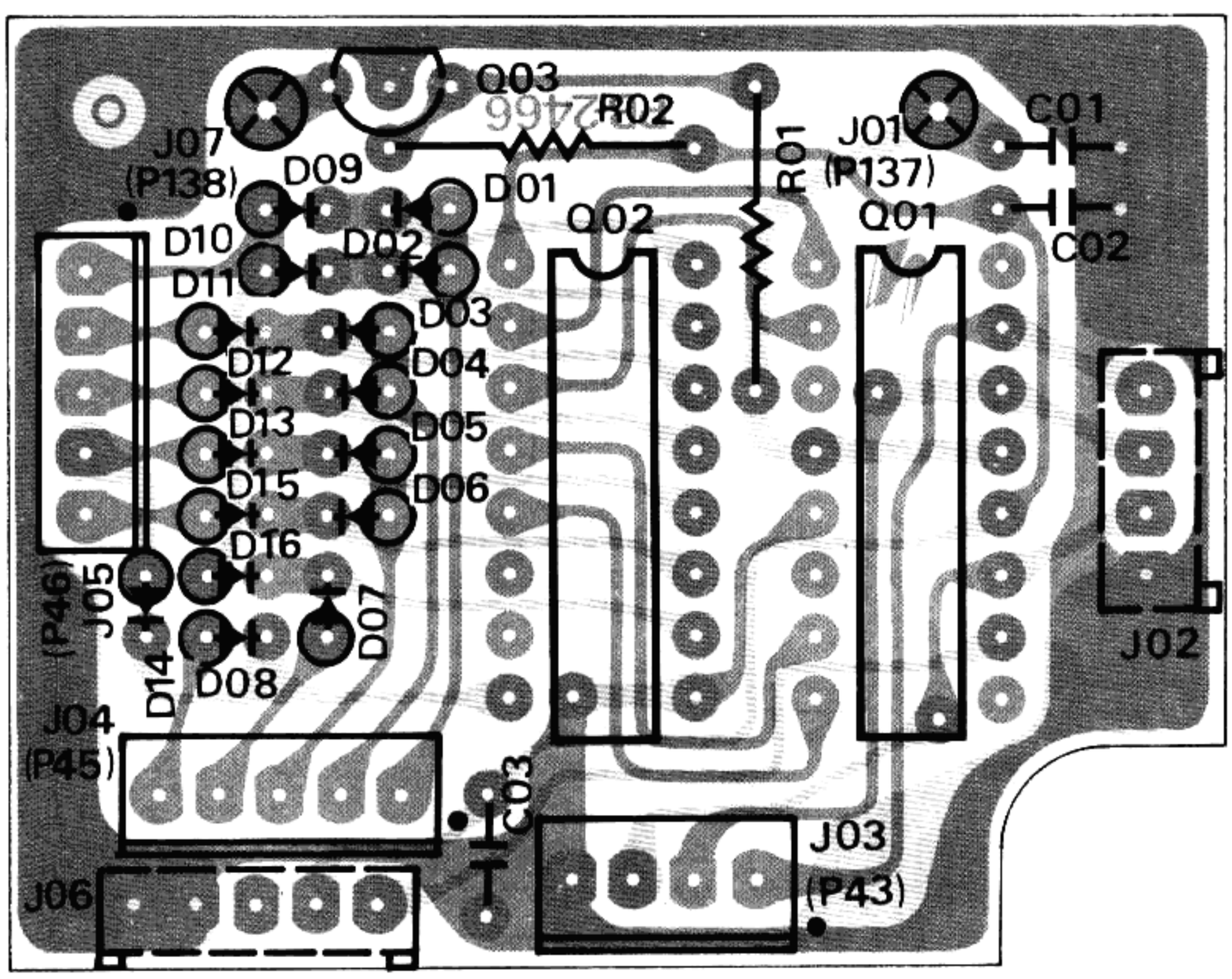

Viewed from solder side

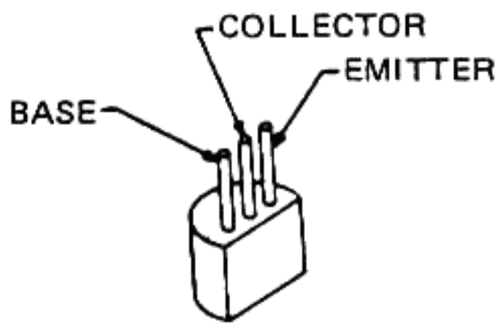

2SA733AP

DISPLAY UNIT B PARTS LA

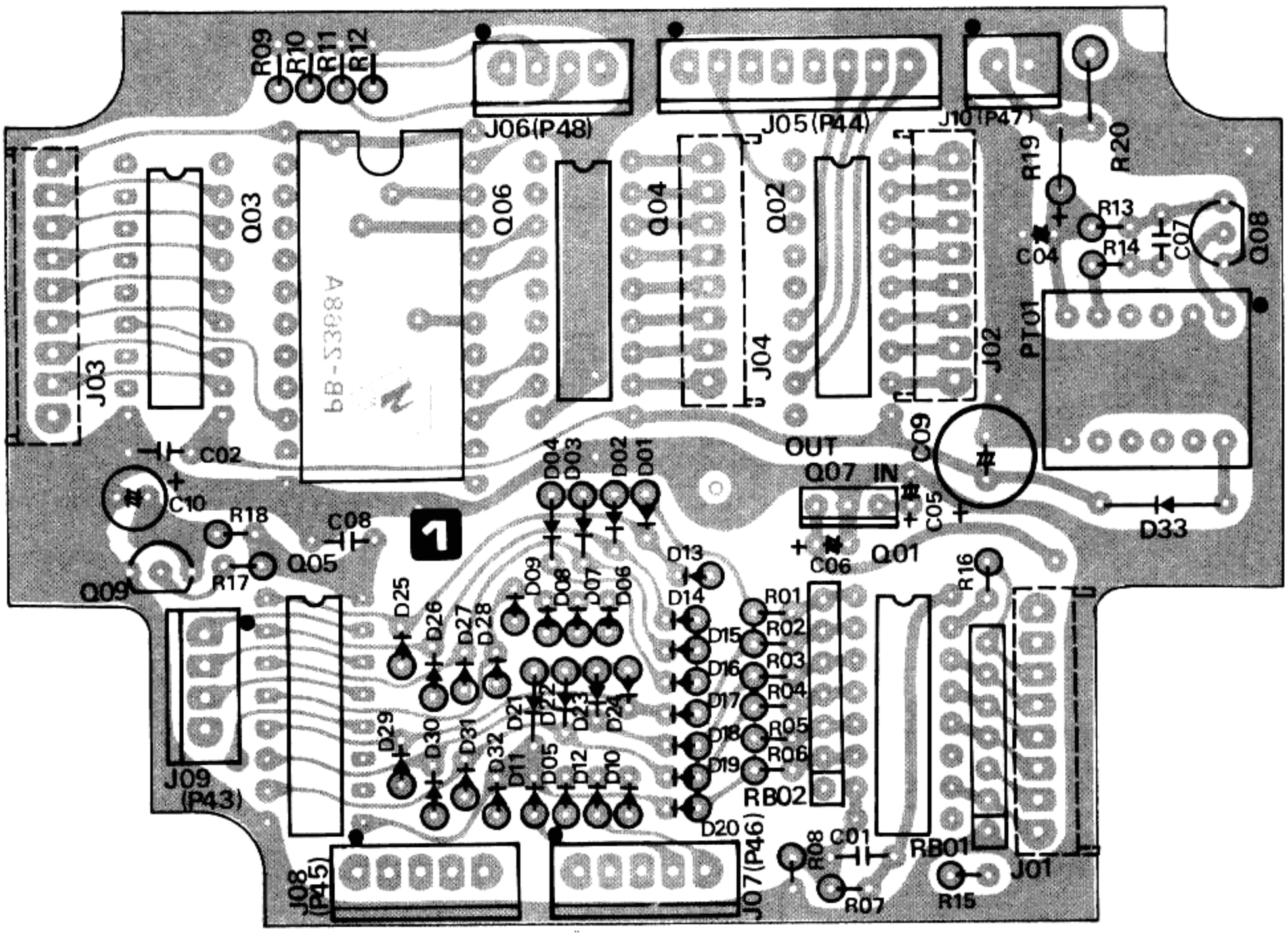

Viewed from component side

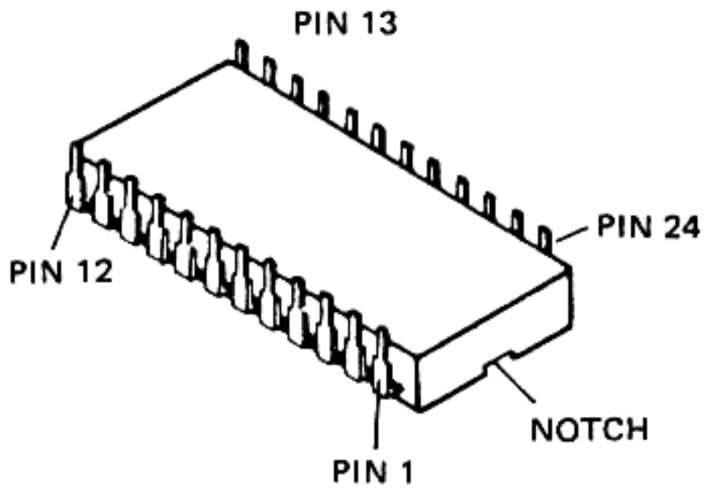

MC14514B

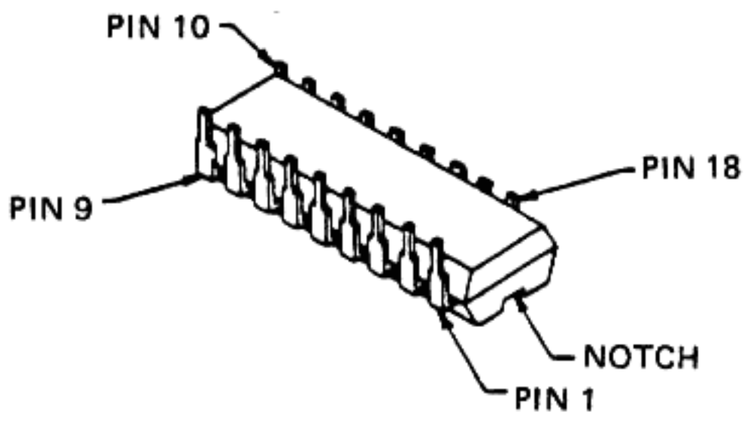

MSL912RS

Y UNIT B PARTS LAYOUT

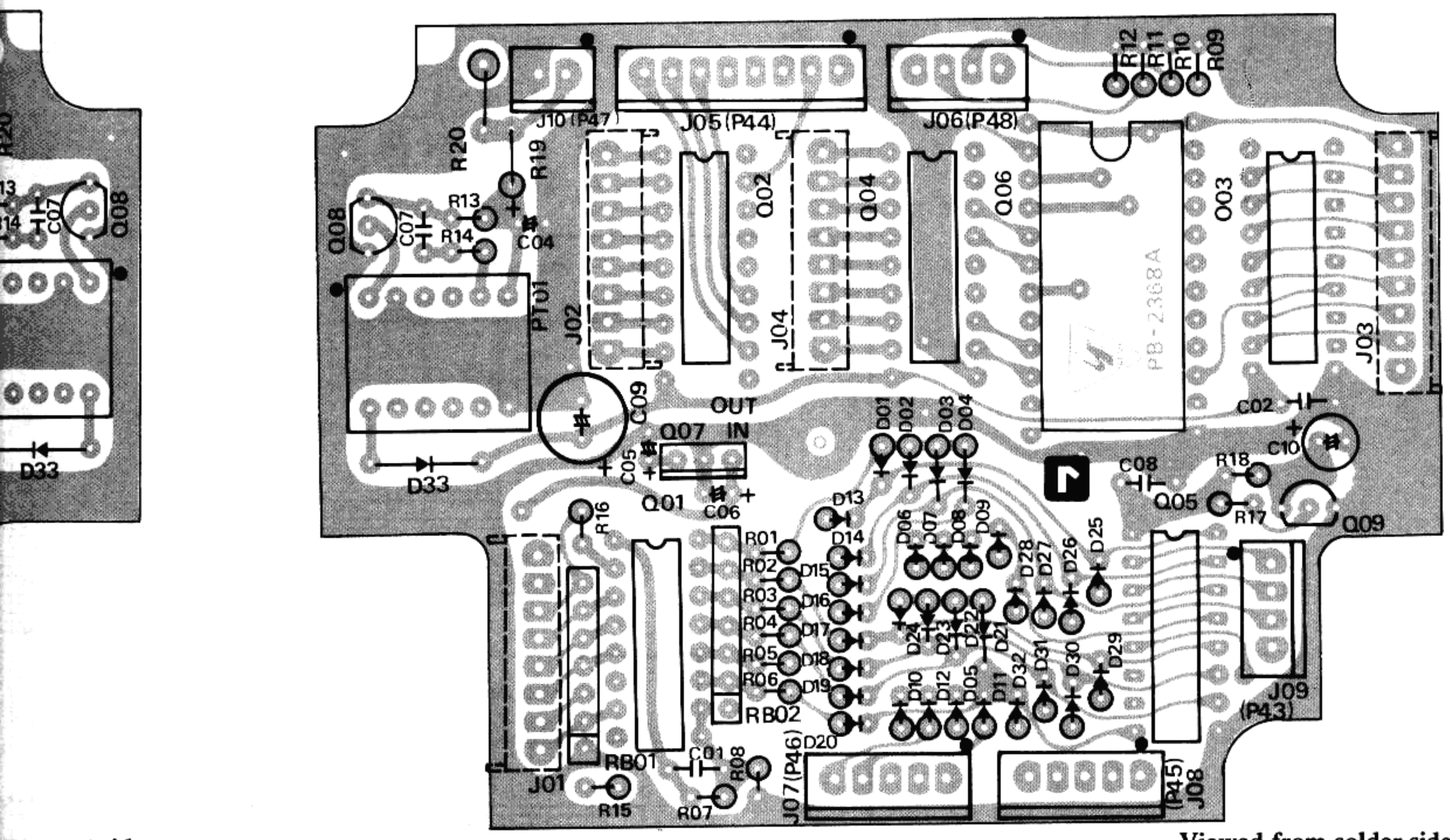

mponent side

Viewed from solder side

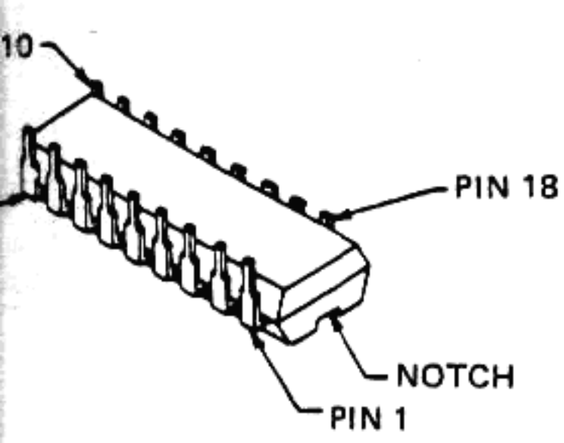

MSL912RS

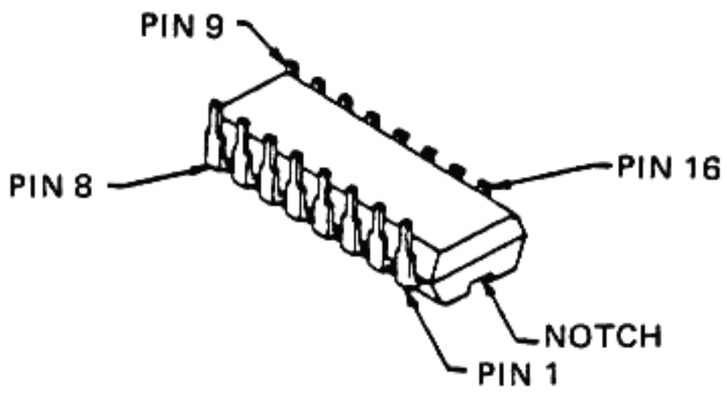

SN7445
TC5067BP

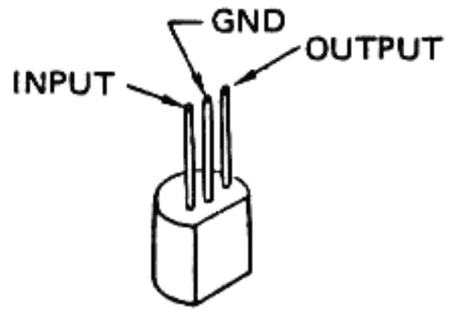

NJM78L05A

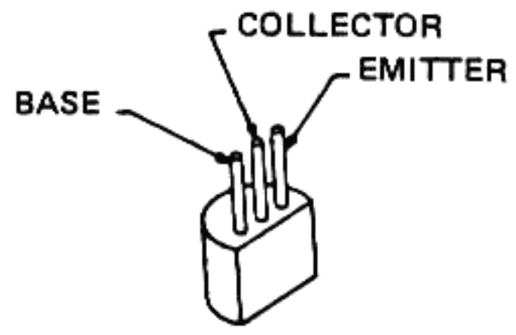

2SC1815GR
2SC2002L

DISPLAY UNIT

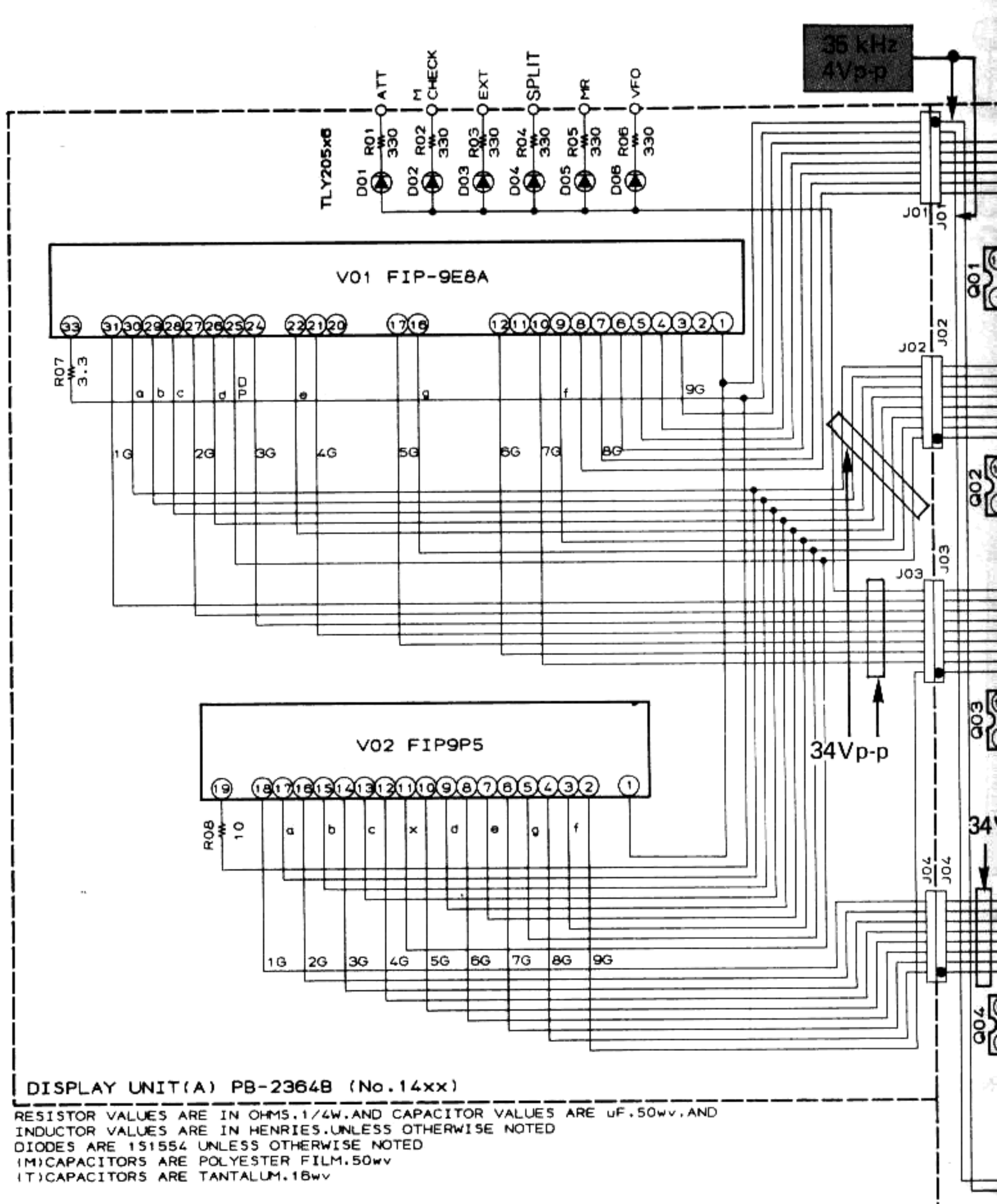

RESISTOR VALUES ARE IN OHMS.1/4W.AND CAPACITOR VALUES ARE uF.50wv.AND
INDUCTOR VALUES ARE IN HENRIES.UNLESS OTHERWISE NOTED
DIODES ARE 1S1554 UNLESS OTHERWISE NOTED
(M)CAPACITORS ARE POLYESTER FILM.50wv
(T)CAPACITORS ARE TANTALUM.16wv

DISPLAY UNIT (B) VOLTAGE CHART

(DC VOLTS)

	E (S)		C (D)		B (G1)		(G2)		REMARKS
	R	T	R	T	R	T	R	T	
Q1619	0		5		5				
Q1607	IN 9		COM 0		OUT 5				

DISPLAY UNIT (B) VOLTA

	1	2	3	4	5	6	7	8	9	10	11	12	13
Q1601	–	–	–	–	–	–	22	22	–	–	–	–	–
Q1602	–	–	–	–	–	–	–	–	0	34	–	–	–
Q1603	–	–	–	–	–	–	–	–	0	34	–	–	–
Q1604	–	–	–	–	–	–	–	–	0	34	–	–	–
Q1605	–	–	–	–	–	–	–	0	–	–	–	0	–
Q3701	–	–	–	–	5	–	0	–	–	–	–	0	–
Q3702	–	–	–	–	–	–	–	0	–	–	–	–	–

DISPLAY UNIT

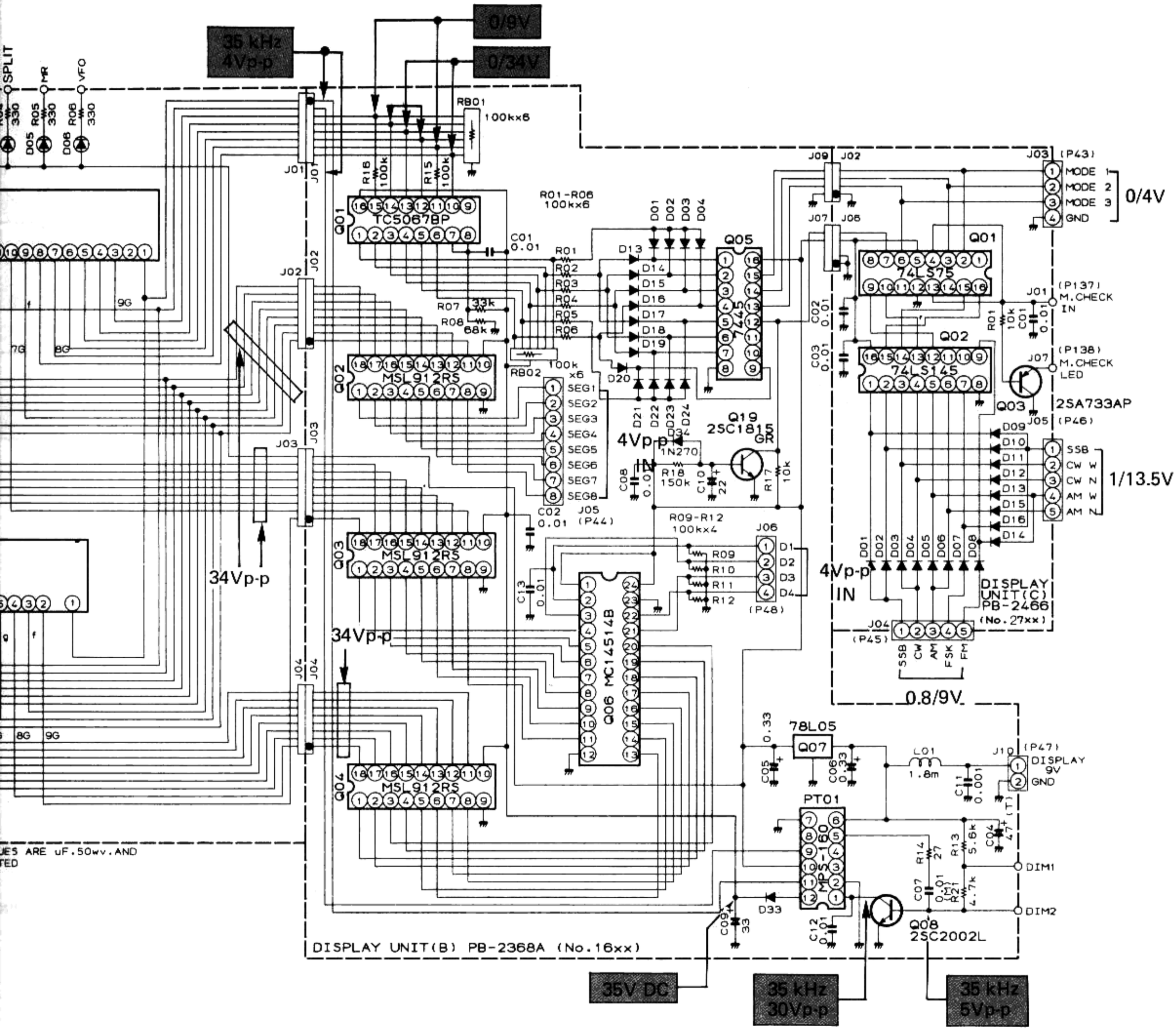

DISPLAY UNIT (B) VOLTAGE CHART

(DC VOLTS)

	1	2	3	4	5	6	7	8	9	10	11	12	13	14	15	16	17	18	REMARKS
601	–	–	–	–	–	–	22	22	–	–	–	–	–	–	–	34			
602	–	–	–	–	–	–	–	–	0	34	–	–	–	–	–	–	–	–	
603	–	–	–	–	–	–	–	–	0	34	–	–	–	–	–	–	–	–	
604	–	–	–	–	–	–	–	–	0	34	–	–	–	–	–	–	–	–	
605	–	–	–	–	–	–	–	0	–	–	–	0	–	–	–	5			
3701	–	–	–	–	5	–	0	–	–	–	–	0	–	–	–	–			
3702	–	–	–	–	–	–	–	0	–	–	–	–	–	–	–	5			

DISPLAY UNIT (C) VOLTAGE CHART

(DC VOLTS)

	E (S)		C (D)		B (G1)		(G2)		REMARKS
	R	T	R	T	R	T	R	T	
Q3703	4		0		4				M CHECK → OFF

MONITOR UNIT PARTS LAYOUT

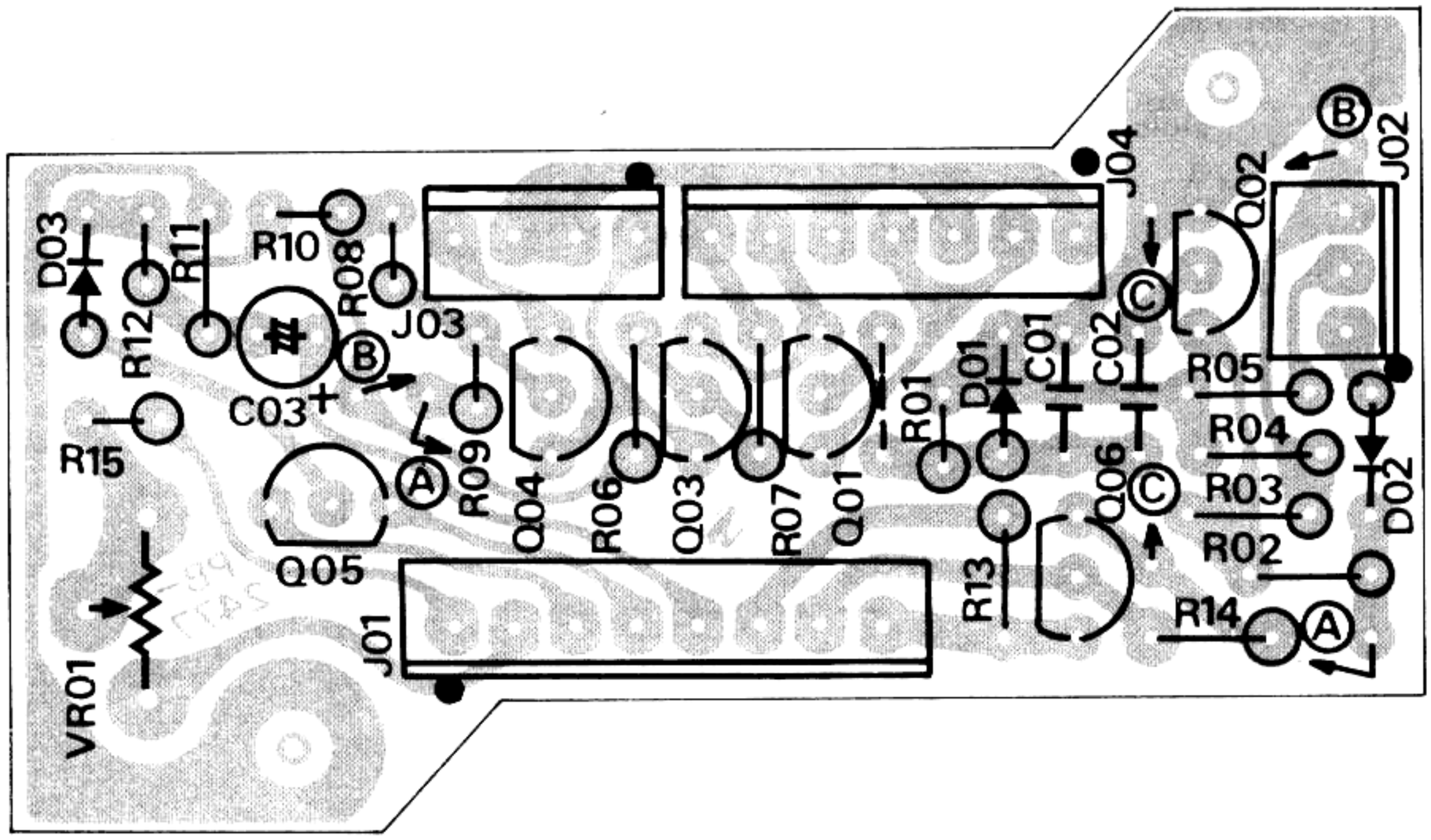

Viewed from component side

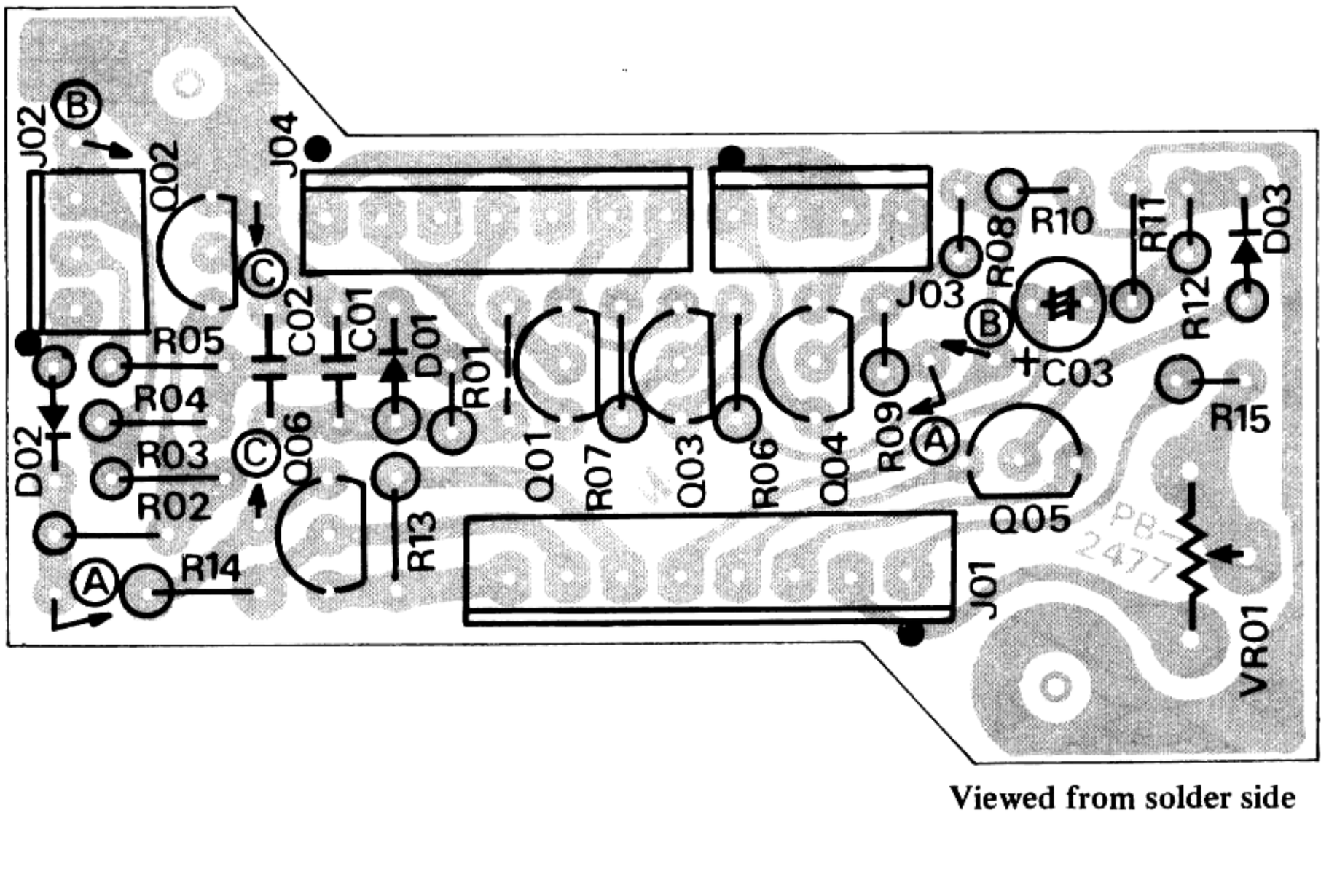

Viewed from solder side

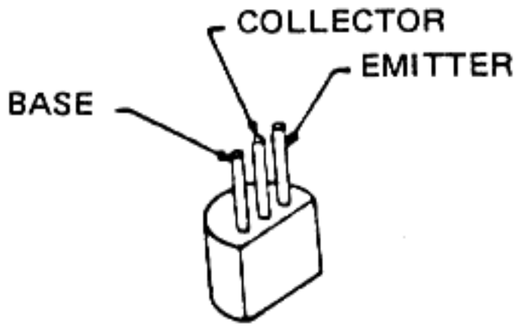

2SA733AP
2SC509Y

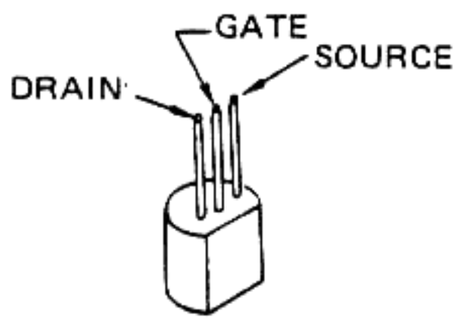

2SK107-3

MONITOR UNIT



ent side



der side

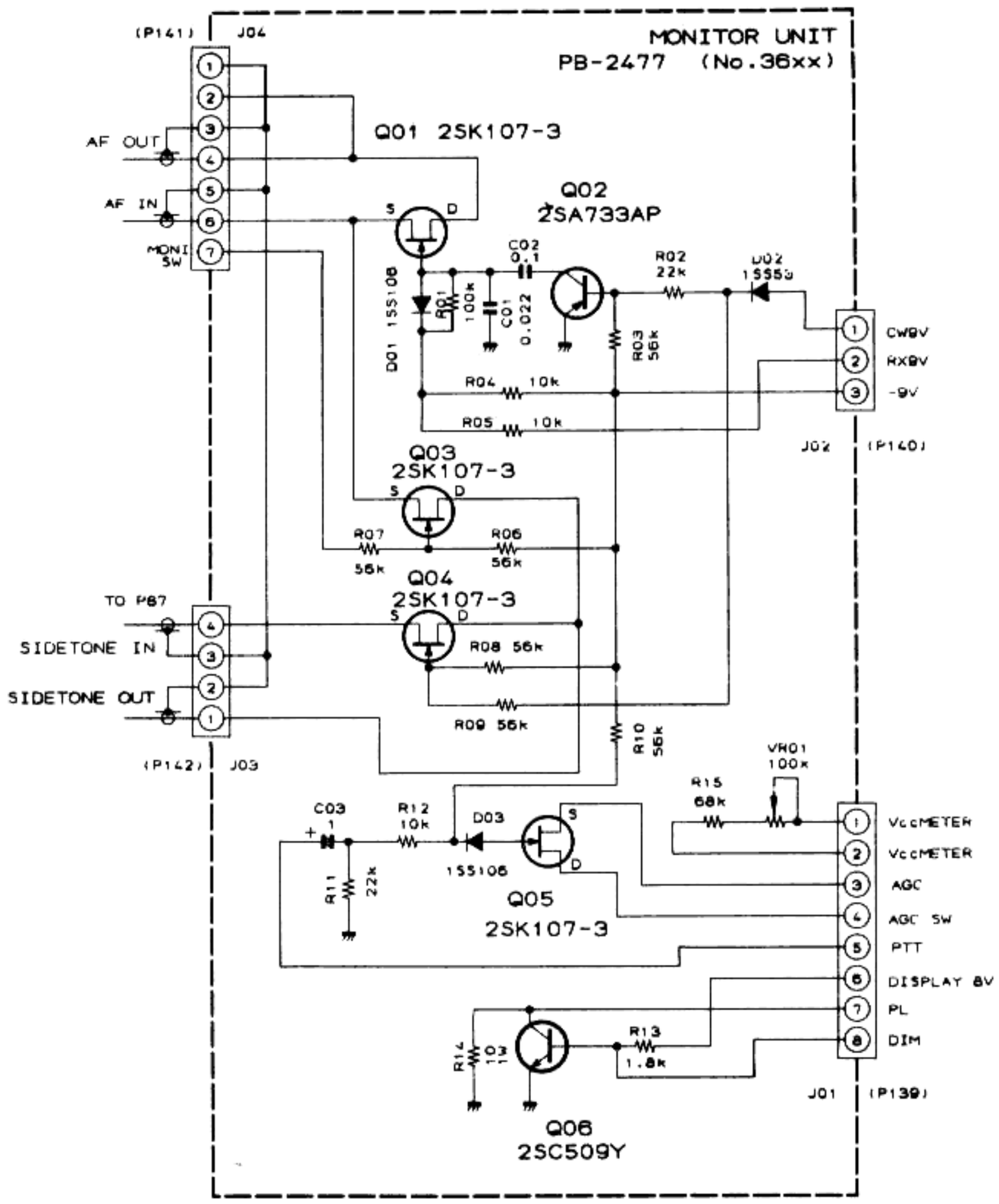

RESISTOR VALUES ARE IN OHMS.1/4W.CAPACITOR VALUES ARE IN uF.50wv.UNLESS OTHERWISE NOTED

MONITOR UNIT VOLTAGE CHART

(DC VOLTS)

	E (S)		C (D)		B (G1)		(G2)		REMARKS
	R	T	R	T	R	T	R	T	
Q3601	0		0		0				CW
Q3602	0		0		3				RX
Q3603	0		0		–9				AGC → OFF SLOW RF GAIN → MAX
Q3604	0		0		0				
Q3605	3		2.5		–9				
Q3606	0		0		0.6				DIM SW → OFF
	0		2.5		0				DIM SW → ON

100W PA UNIT PARTS LAYOUT

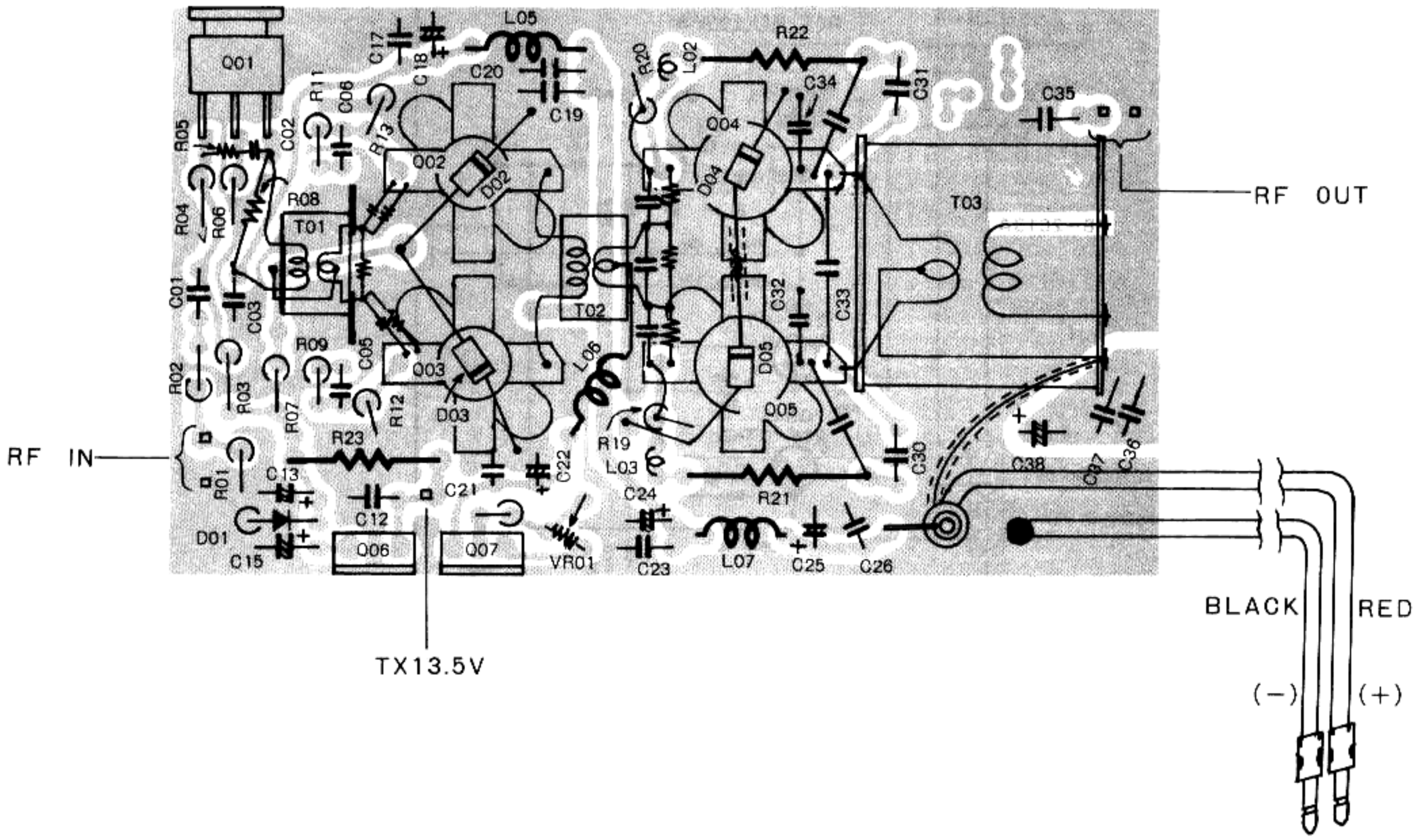



100W PA UNIT VOLTAGE CHART

(DC VOLTS)

	E (S)		C (D)		B (G1)		(G2)		REMARKS
	R	T	R	T	R	T	R	T	
Q8001		0.4		13.5		1.2			
Q8002		0		13.5		0.7			
Q8003		0		13.5		0.7			
Q8004		0		24		0.7			
Q8005		0		24		0.7			
Q8006		IN 13.5		COM 0		OUT 8			
Q8007		0.7		8		1.4			

100W PA UNIT

F OUT

CK RED

-) (+)

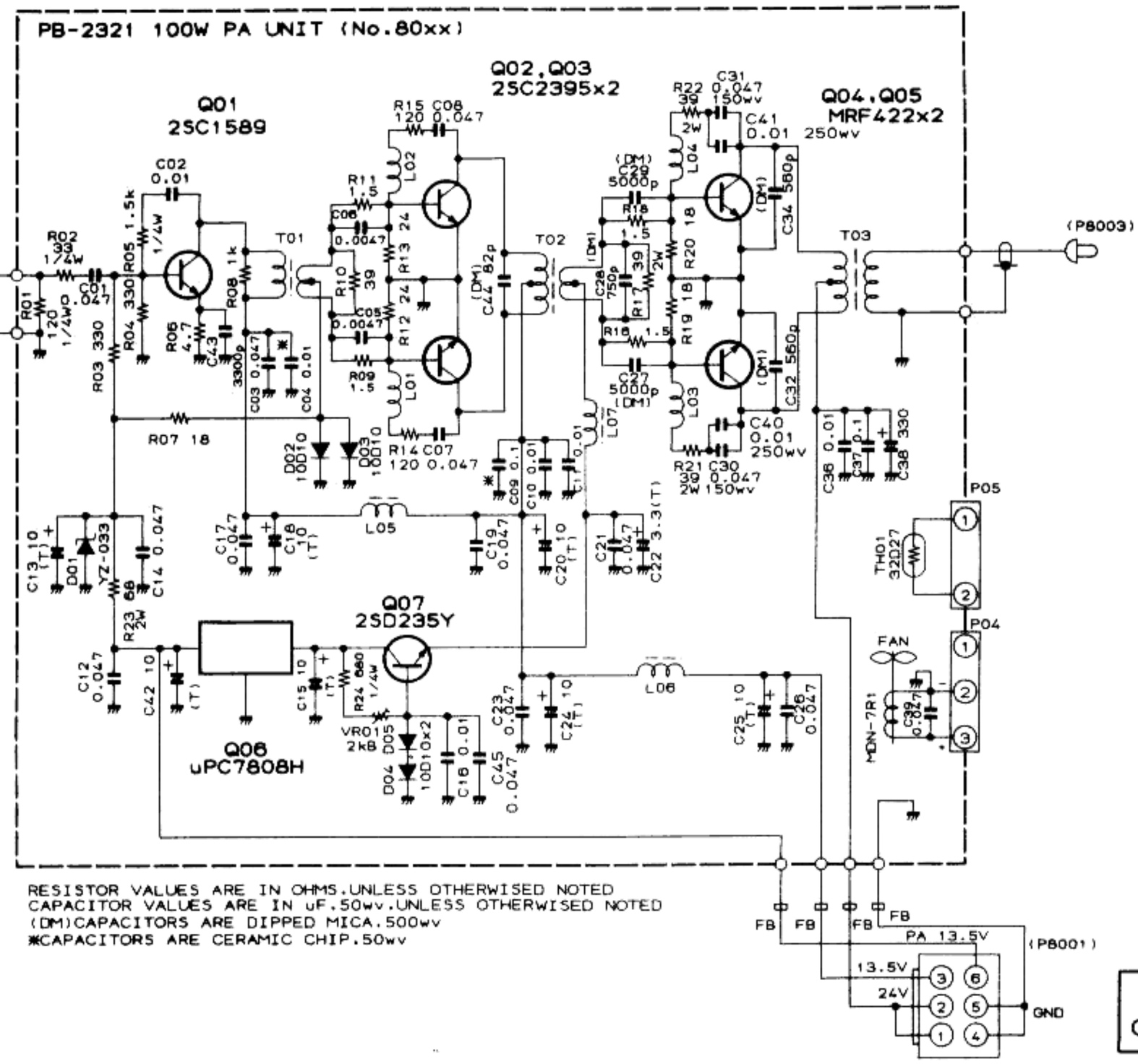

RESISTOR VALUES ARE IN OHMS.UNLESS OTHERWISED NOTED
CAPACITOR VALUES ARE IN uF.50wv.UNLESS OTHERWISED NOTED
(DM)CAPACITORS ARE DIPPED MICA.500wv
*CAPACITORS ARE CERAMIC CHIP.50wv

100W PA UNIT
CIRCUIT DIAGRAM

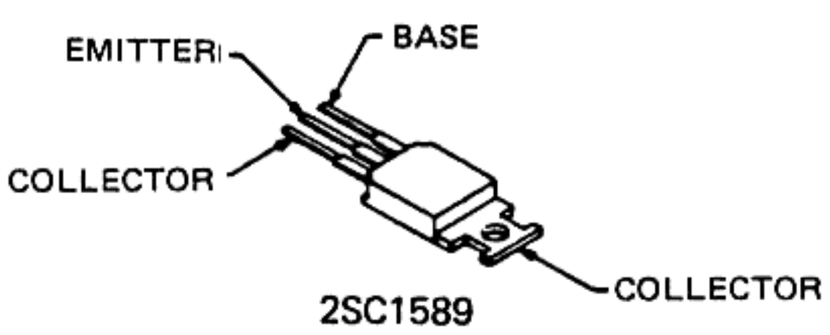

2SC1589

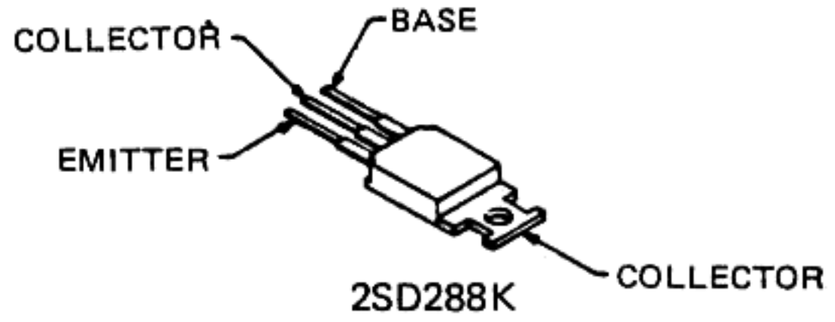

2SD288K

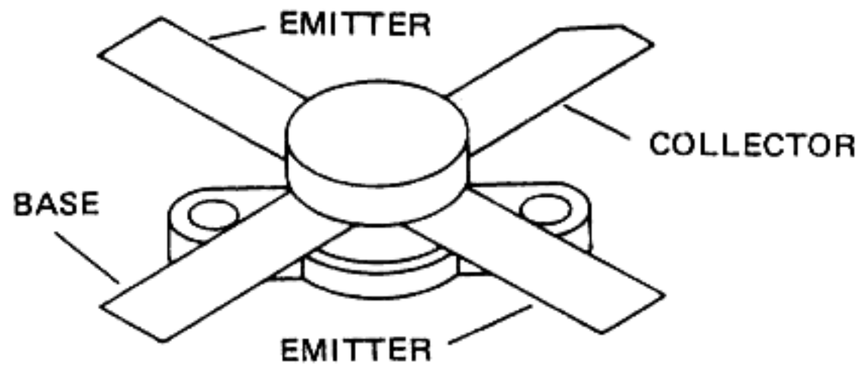

2SC2395
MRF422

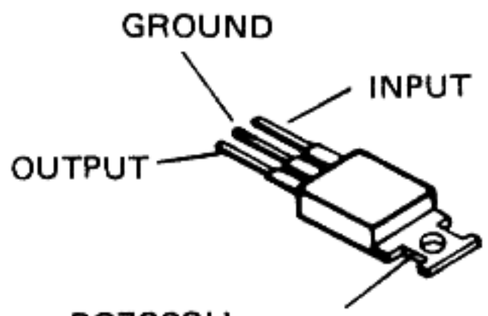

μPC7808H GROUND

10W PA UNIT

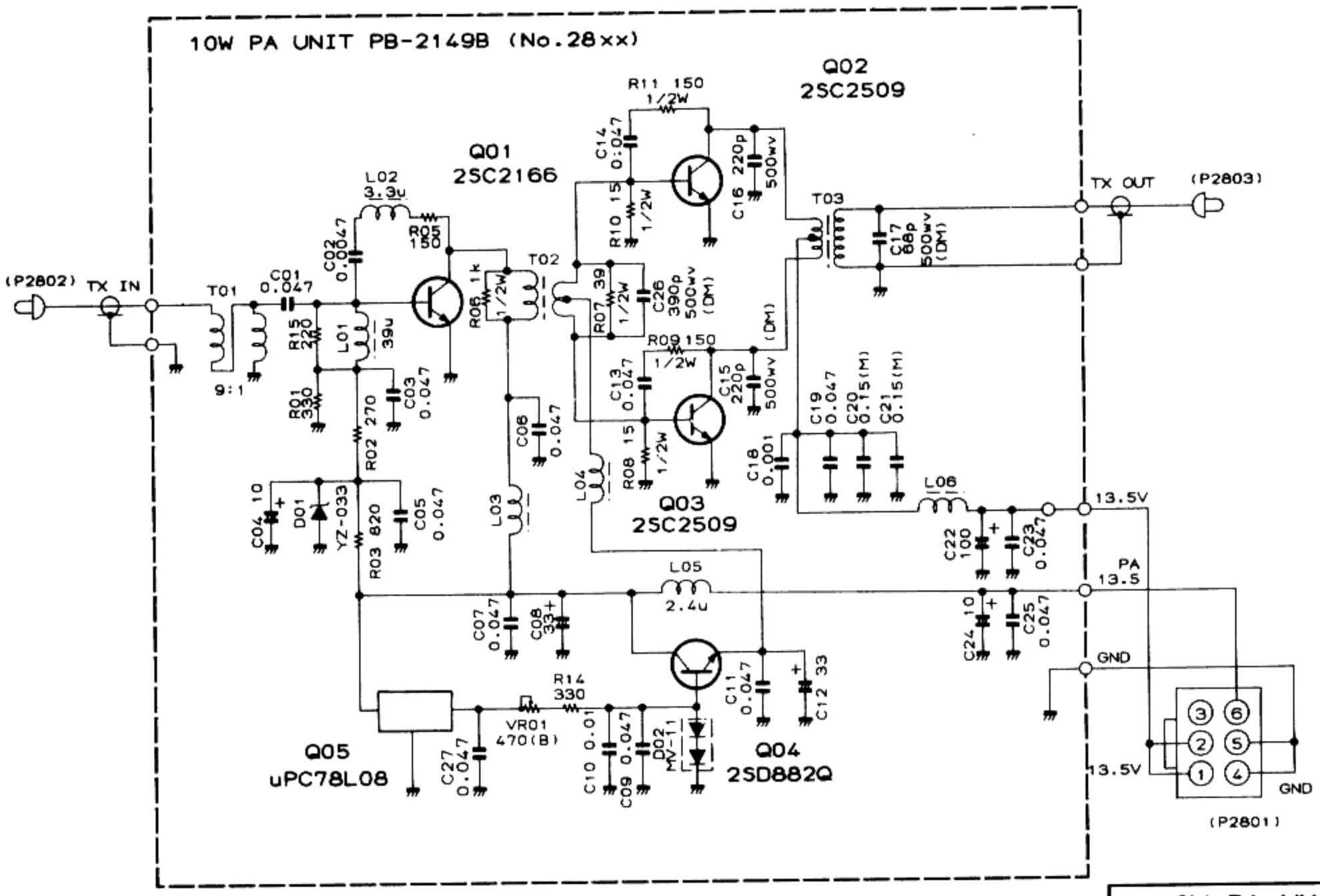

RESISTOR VALUES ARE IN OHMS.1/4W.AND CAPACITOR VALUES ARE IN uF.50wv.
INDUCTOR VALUES ARE IN HENRIES.UNLESS OTHERWISED NOTED
ELECTROLYTIC CAPACITOR VALUES ARE IN uF.16wv UNLESS OTHERWISED NOTED
(M)CAPACITORS ARE POLYESTER FILM.50wv
(DM)CAPACITORS ARE DIPPED MICA.50wv

10W PA UNIT
CIRCUIT DIAGRAM

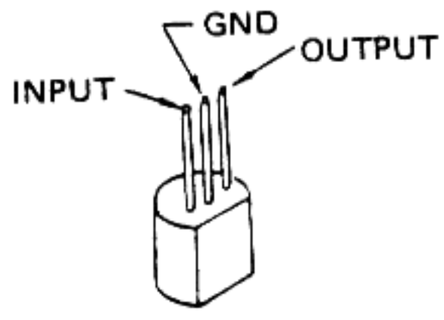

μPC78L08

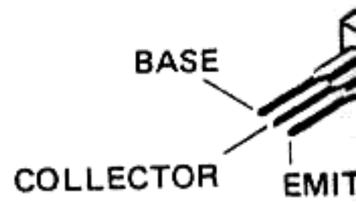

2S

10W PA UNIT PARTS LAYOUT

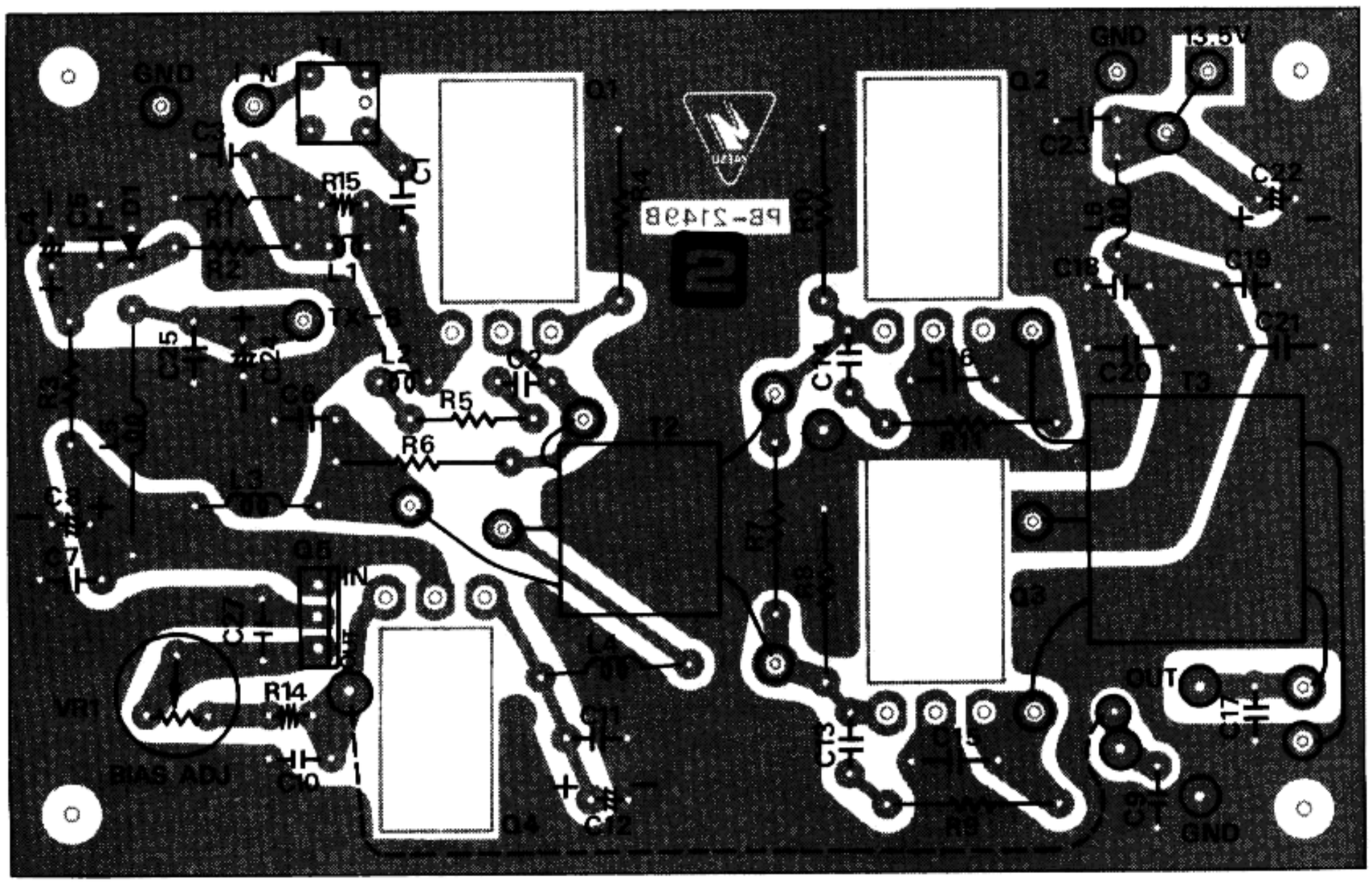

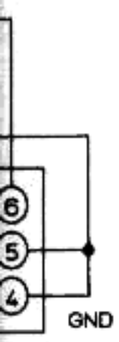

2801)

PA UNIT
T DIAGRAM

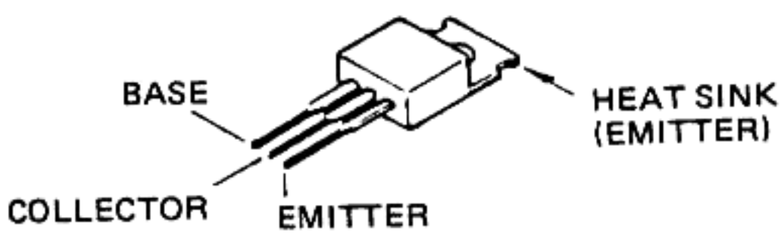

2SC2509

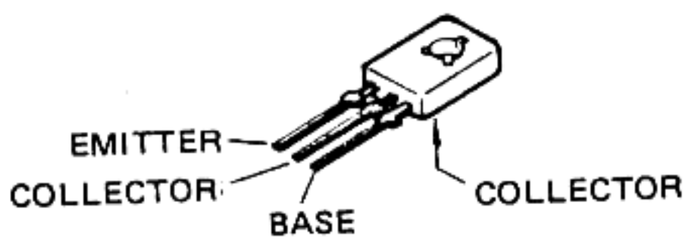

2SD882Q

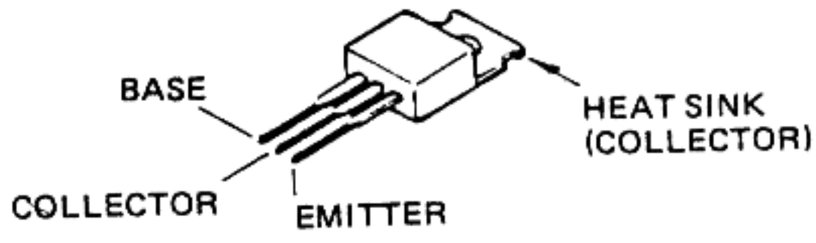

2SC2166

100W PS UNIT

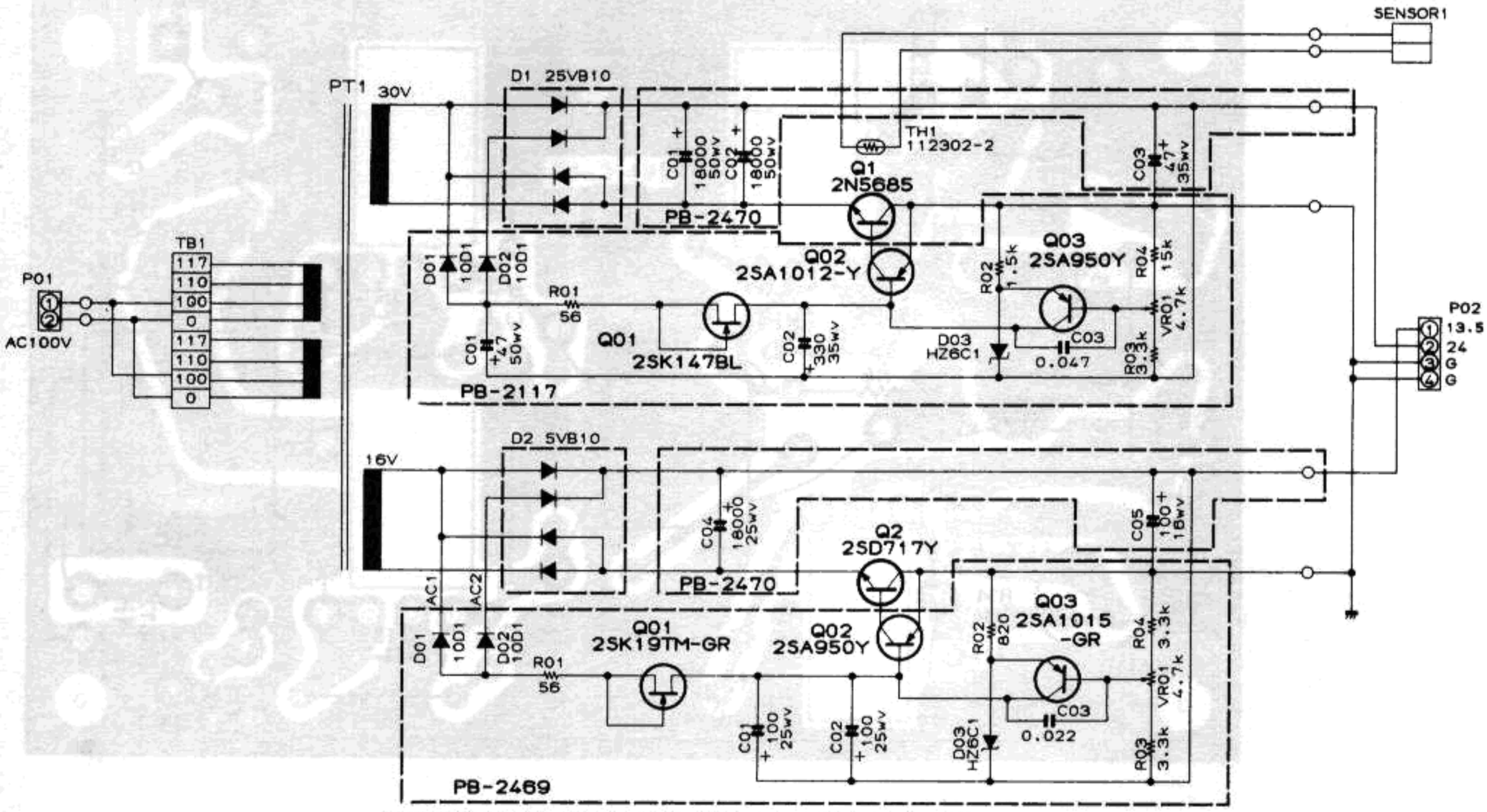

RESISTOR VALUES ARE IN OHMS.1/4W.AND CAPACITOR VALUES ARE IN uF.50wv.AND INDUCTOR VALUES ARE IN HENRIES UNLESS OTHERWISE NOTED

100W PS UNIT

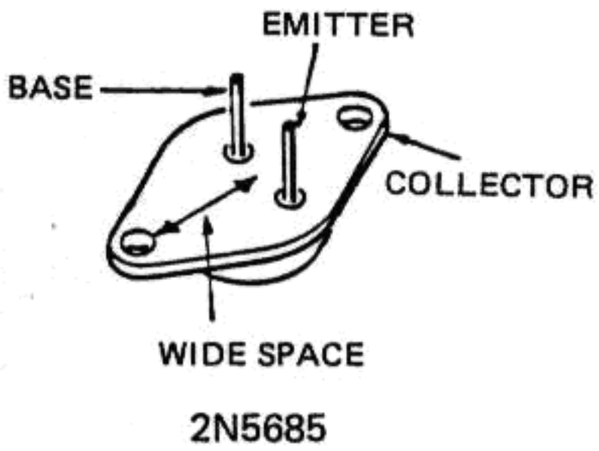

2N5685

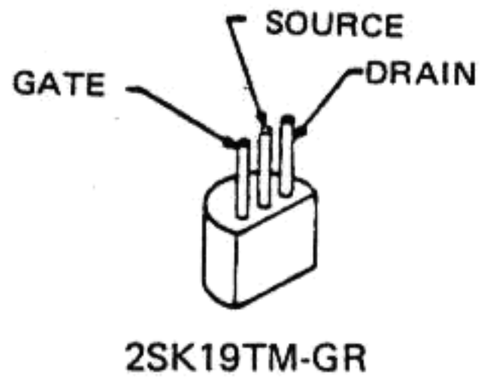

2SK19TM-GR

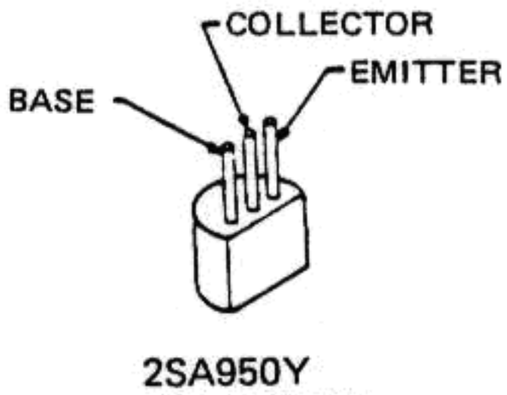

2SA950Y
2SA1015GR

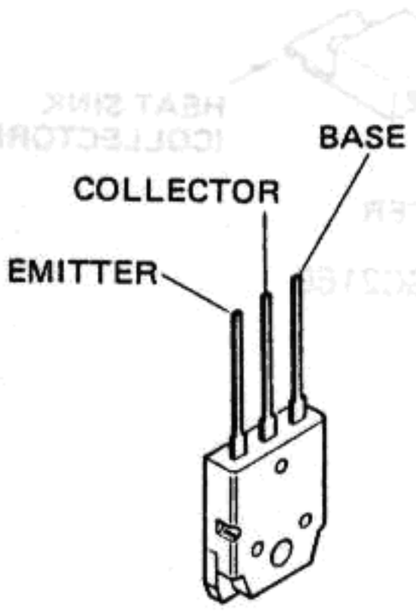

2SD717Y

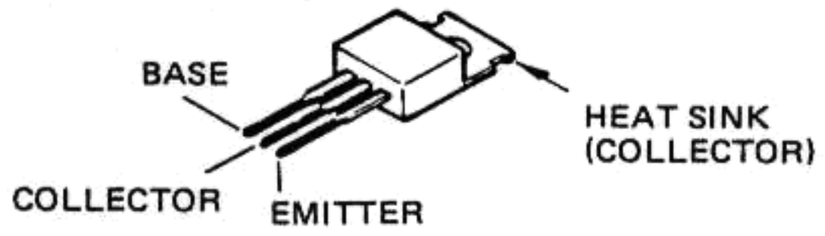

2SA1012Y

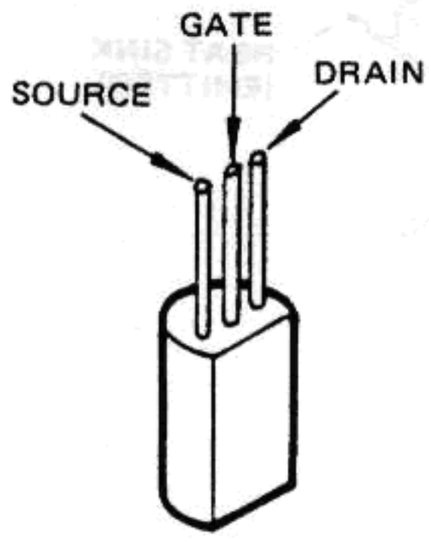

2SK147BL

100W PS UNIT PARTS LAYOUT

PB-2470

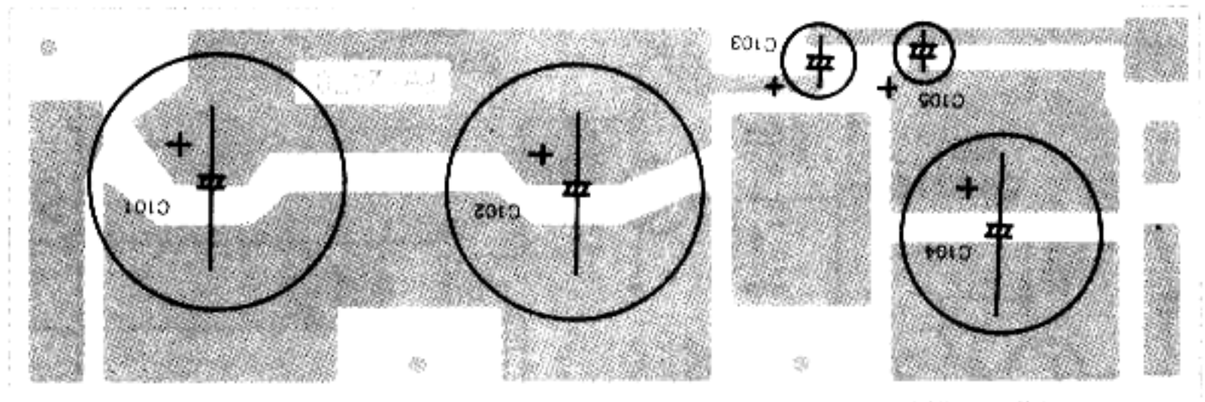

Viewed from solder side

24V AVR UNIT (PB-2117)

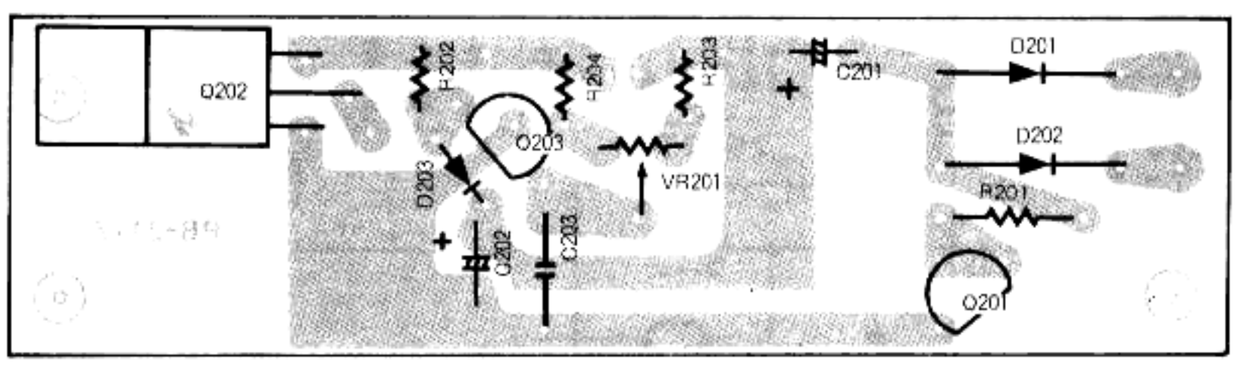

Viewed from component side

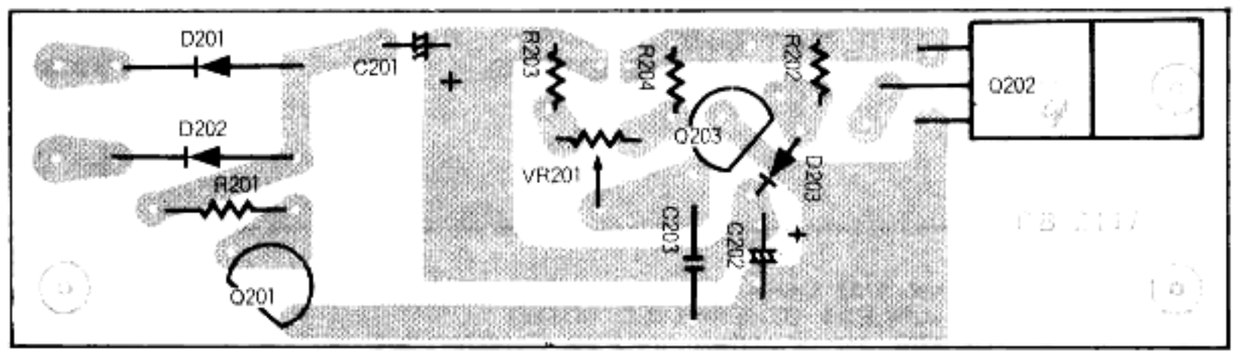

Viewed from solder side

13.5V AVR UNIT (PB-2469)

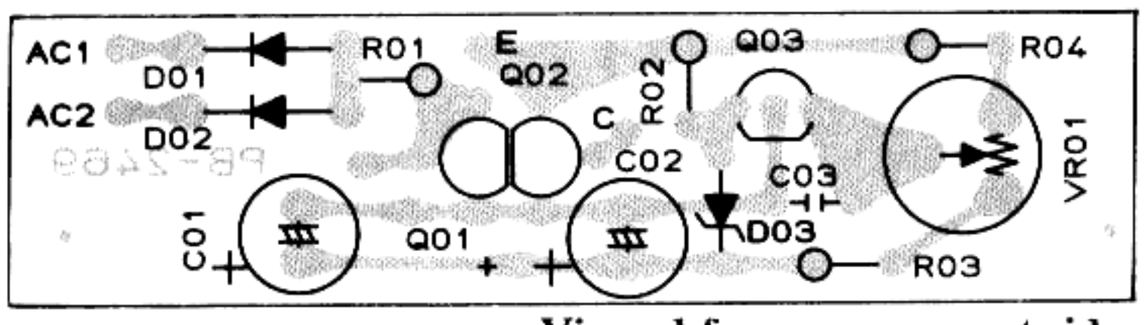

Viewed from component side

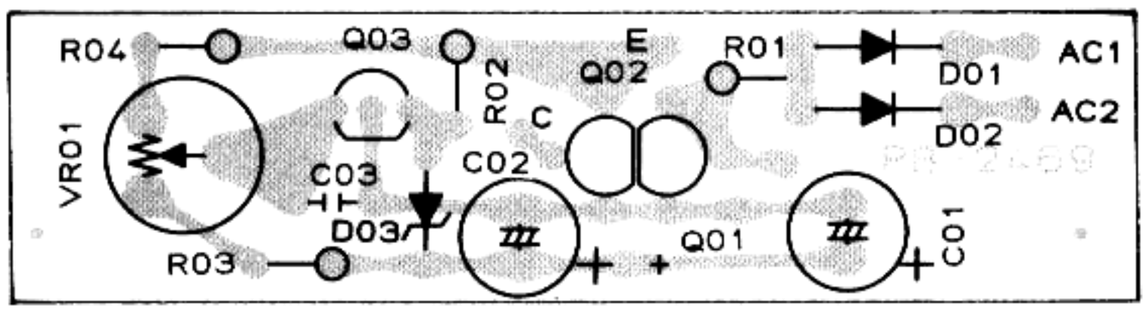

Viewed from solder side

10W PS UNIT

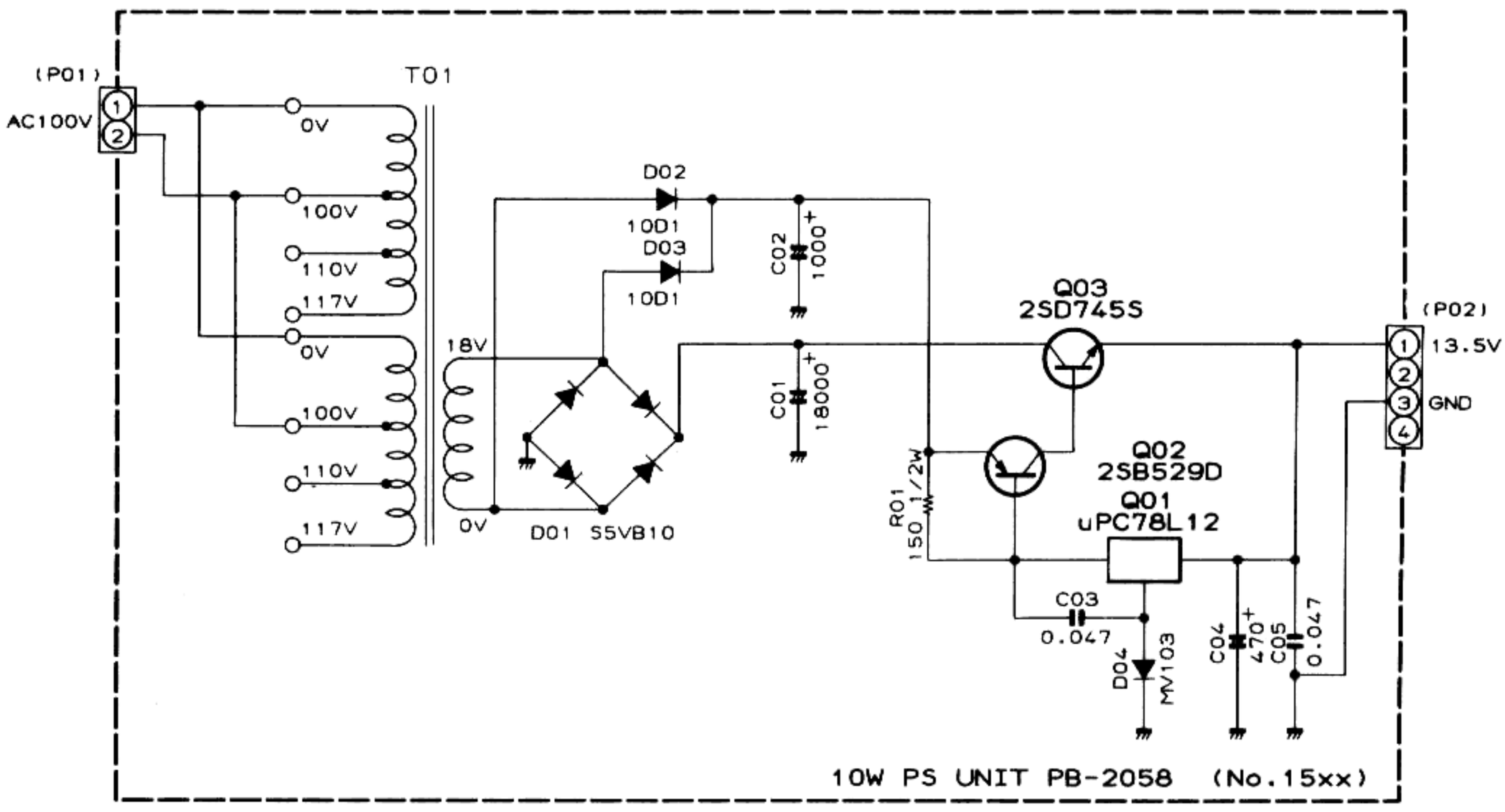

RESISTOR VALUES ARE IN OHMS.AND CAPACITOR VALUES ARE IN uF.50wv.
UNLESS OTHERWISE NOTED

10W PS UNIT

10W PS UNIT PARTS LAYOUT

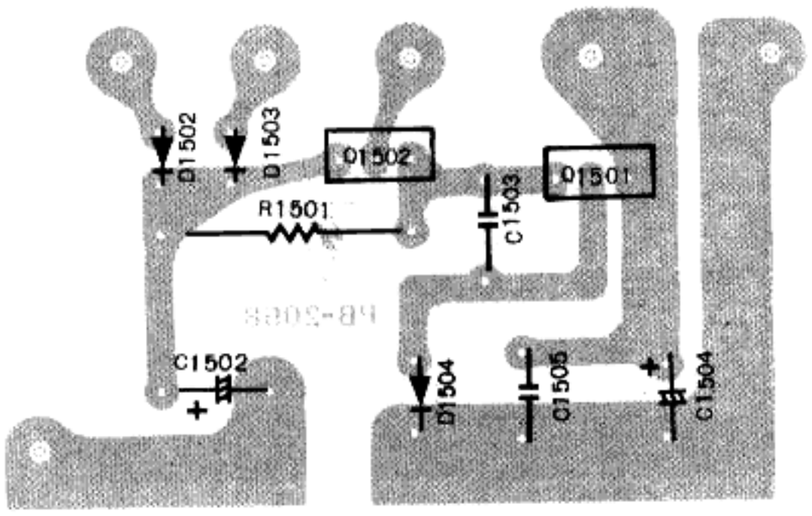

Viewed from component side

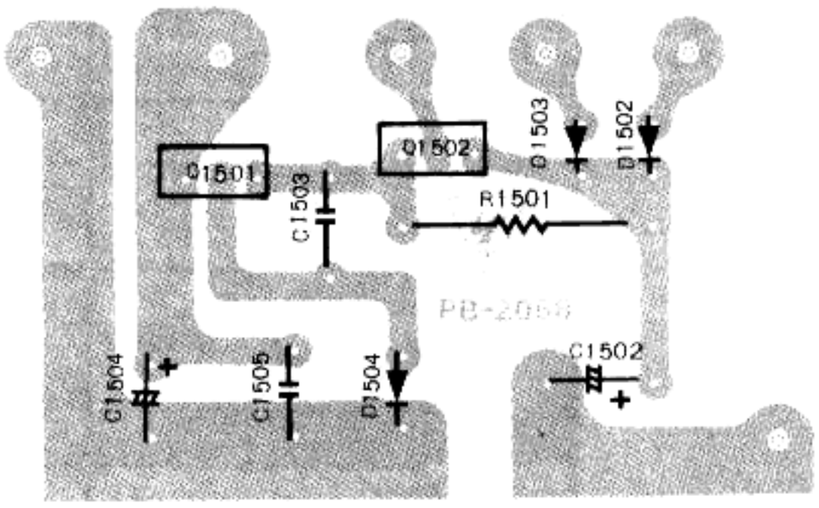

Viewed from solder side

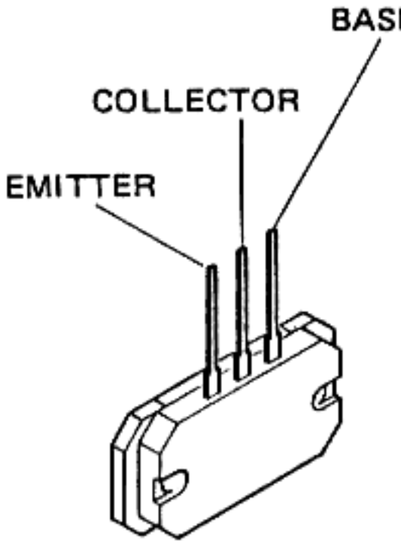

2SD745S

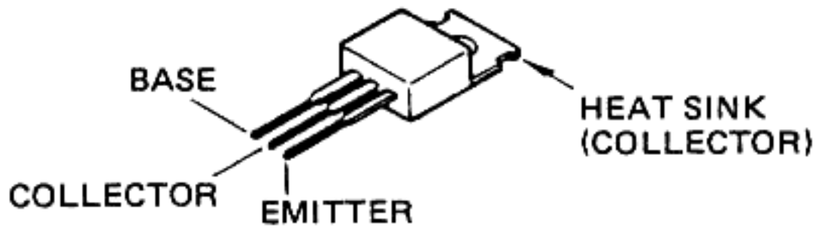

2SB529D

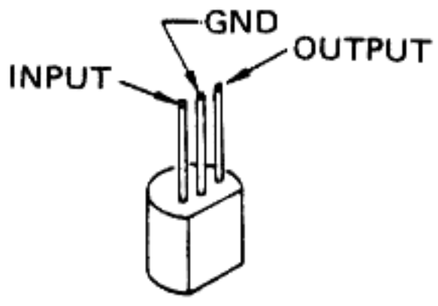

μPC78L12

P I UNIT PARTS LAYOUT

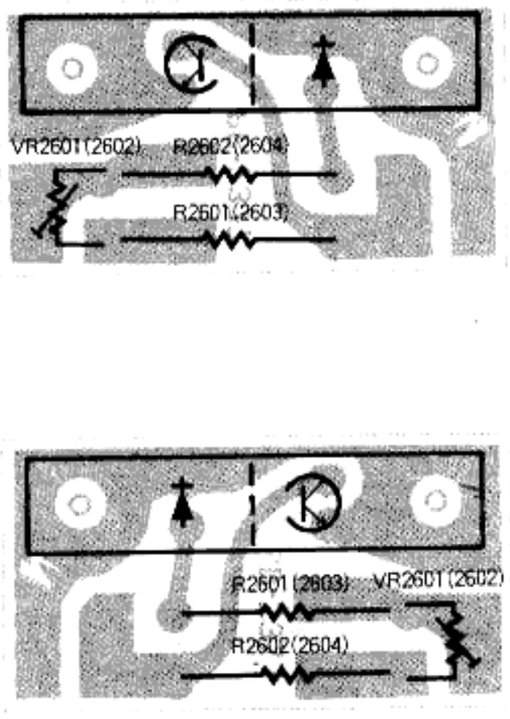

Viewed from solder side

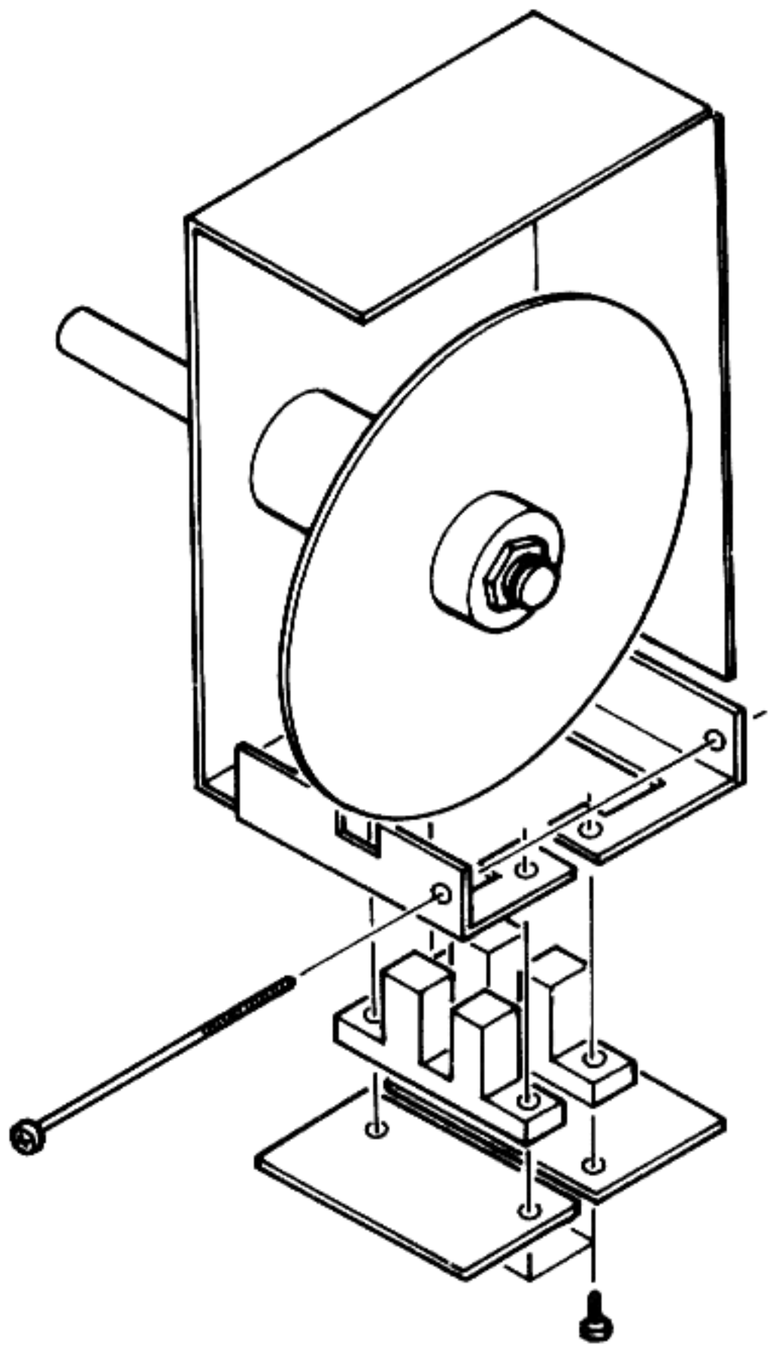

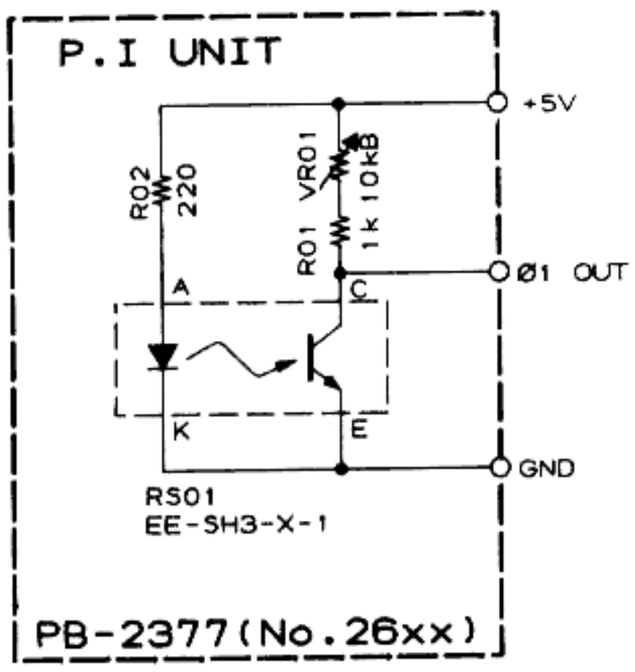

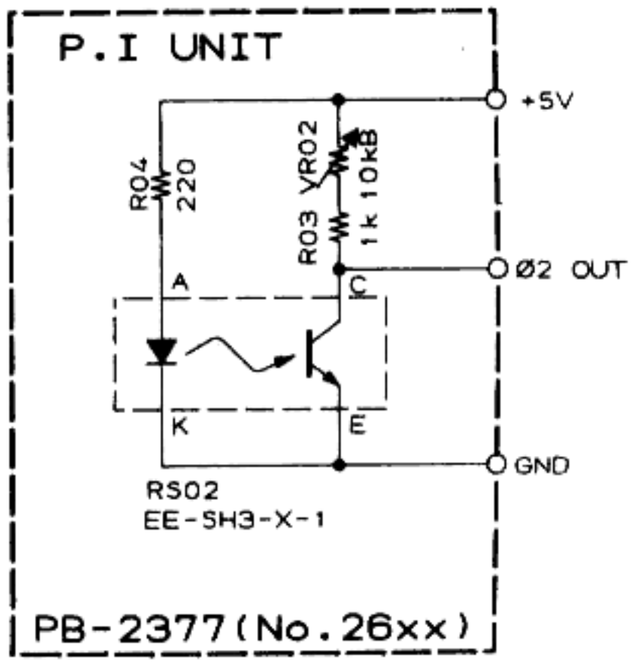

IF SHIFT UNIT

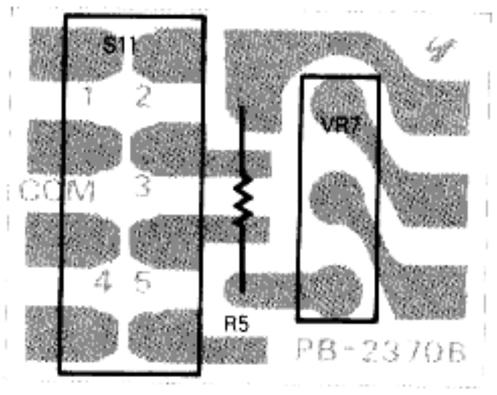

Viewed from solder side

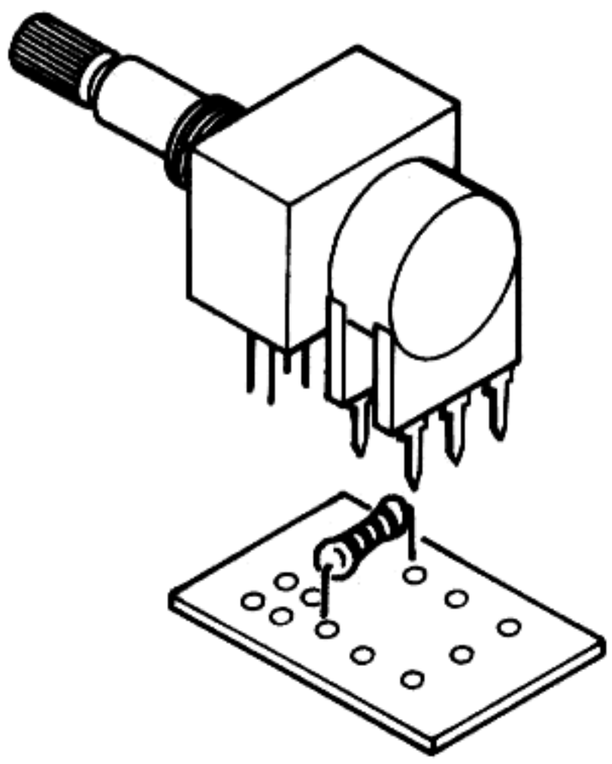

PB-2300

BCD ENCODER (O=ON)

PIN / SW. POSITION	1	2	3	4	5	6	
1							
2	O						
3		O					
4	O	O					
5			O				
6	O		O				
7		O	O				
8	O	O	O				
9				O			
10	O			O			
11		O		O			
12	O	O		O			
13			O	O			
14	O		O	O			
15		O	O	O			
16	O	O	O	O			
17					O		
18	O				O		
19		O			O		
20	O	O			O		
21			O		O		
22	O		O		O		
23		O	O		O		
24	O	O	O		O		
25				O	O		
26	O			O	O		
27		O		O	O		
28	O	O		O	O		
29			O	O	O		
30	O		O	O	O		
31		O	O	O	O		

U/D SWITCH UNIT PARTS LAYOUT

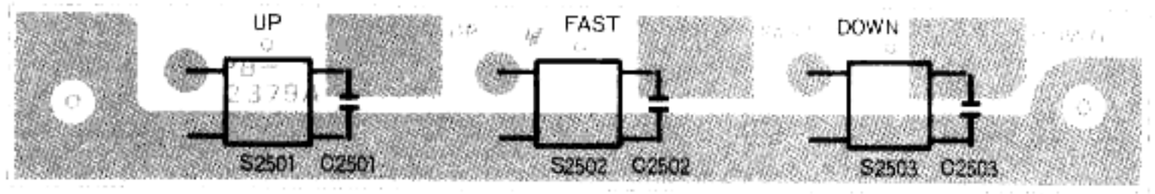

PB-2379A

CW PITCH UNIT PARTS LAYOUT

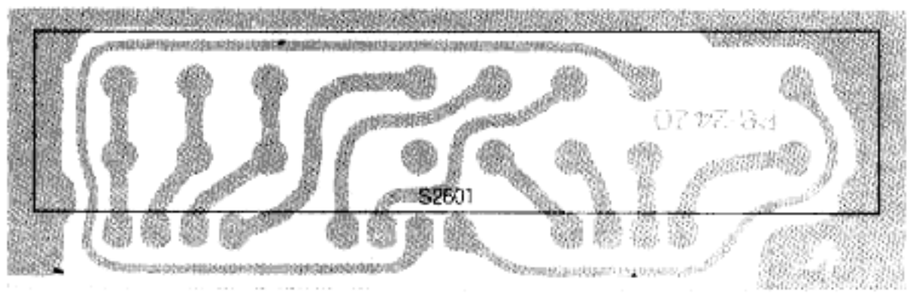

PB-2420

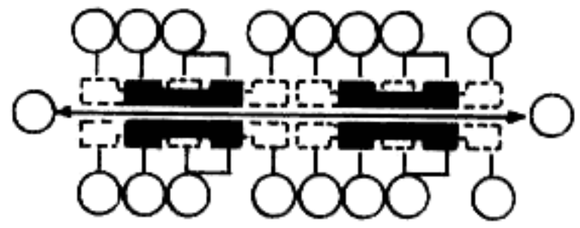

SWITCH UNIT (B) PARTS LAYOUT

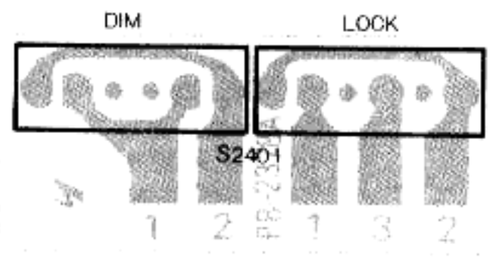

PB-2378A

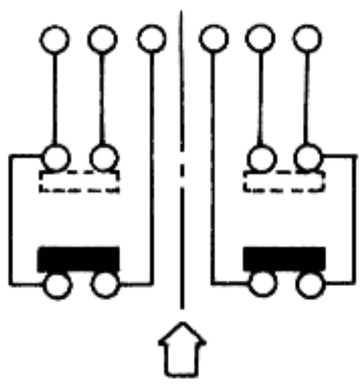

SWITCH UNIT (A) PARTS LAYOUT

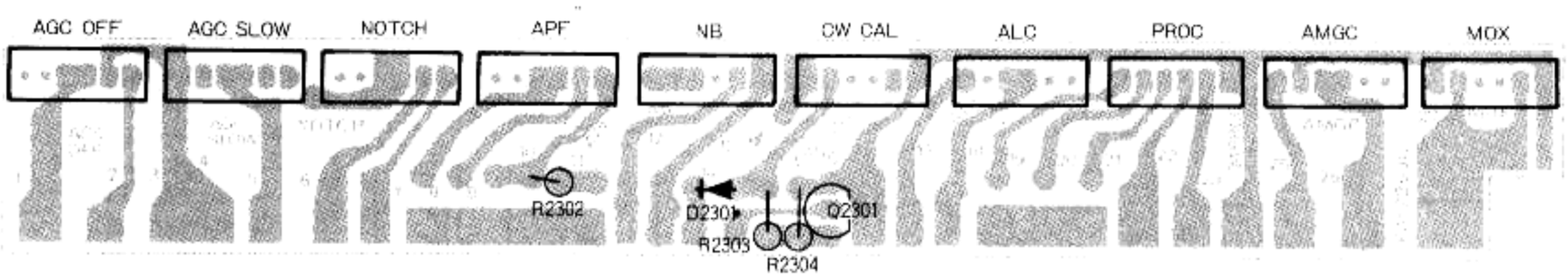

PB-2369C

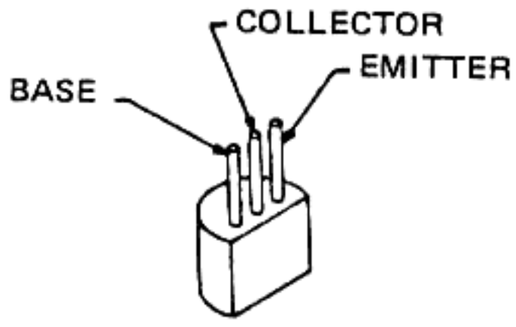

2SC1815GR

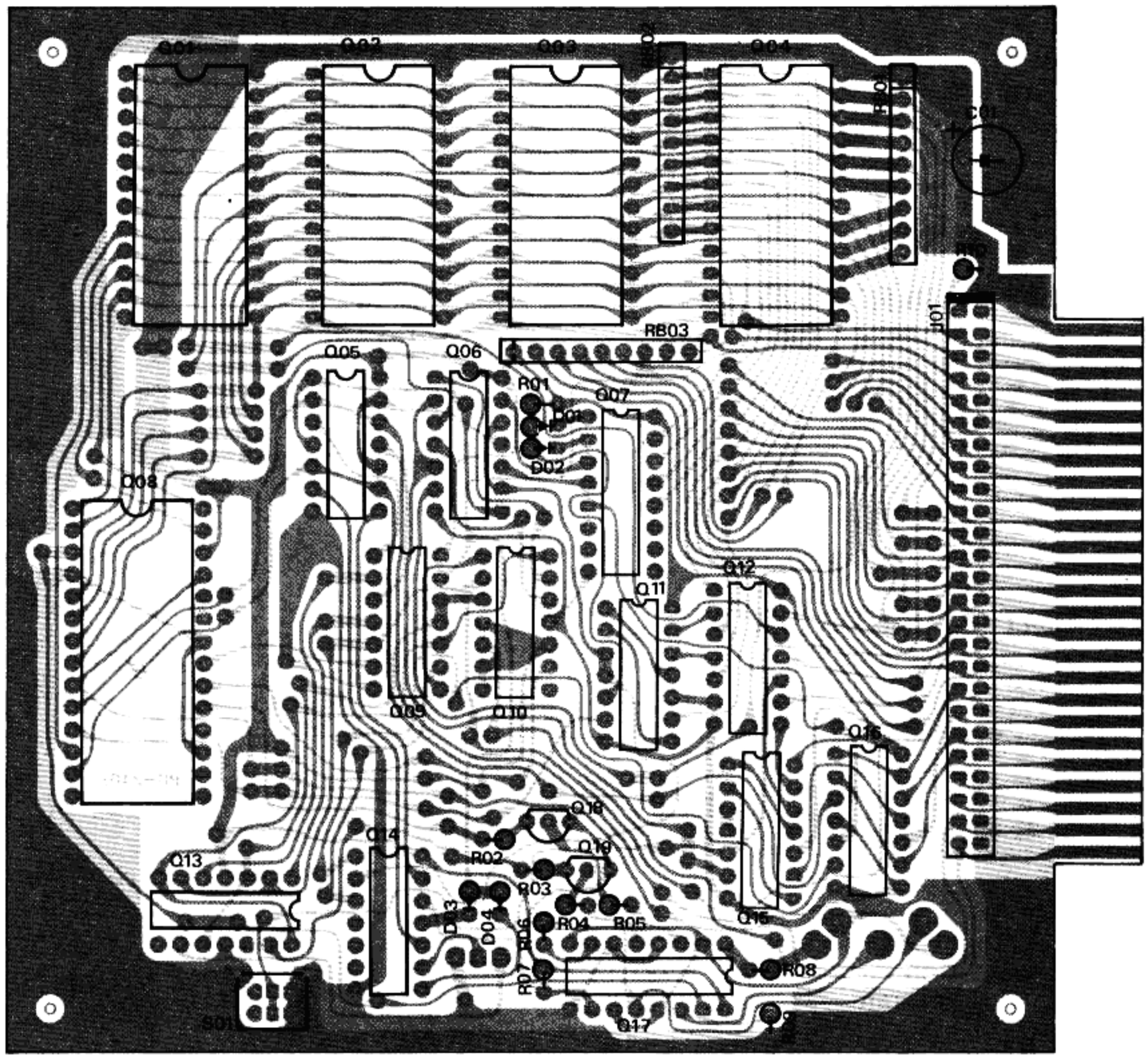

Viewed from component side

E UNIT PARTS LAYOUT

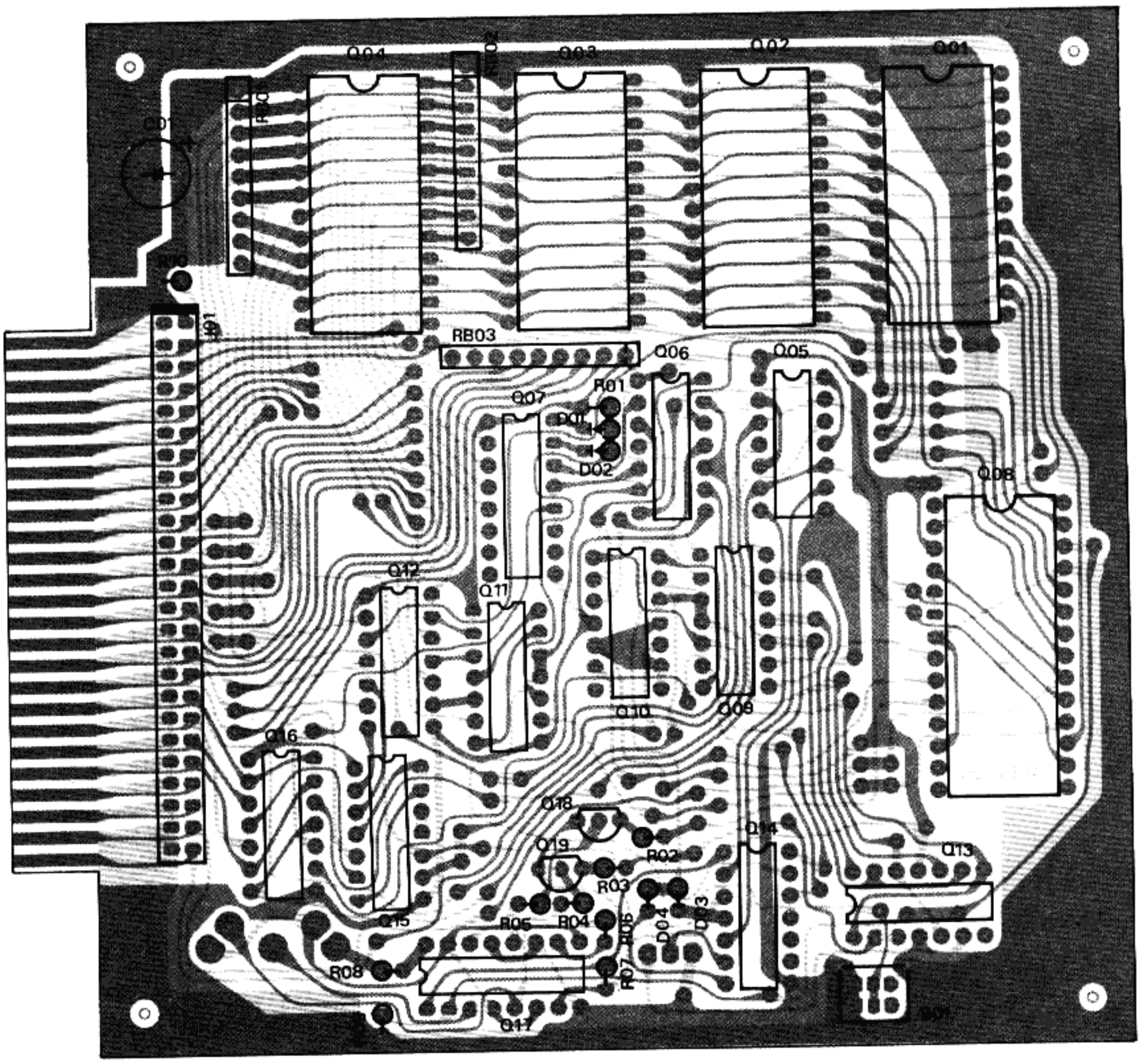

Viewed from solder side

FRONT PANEL EXPL

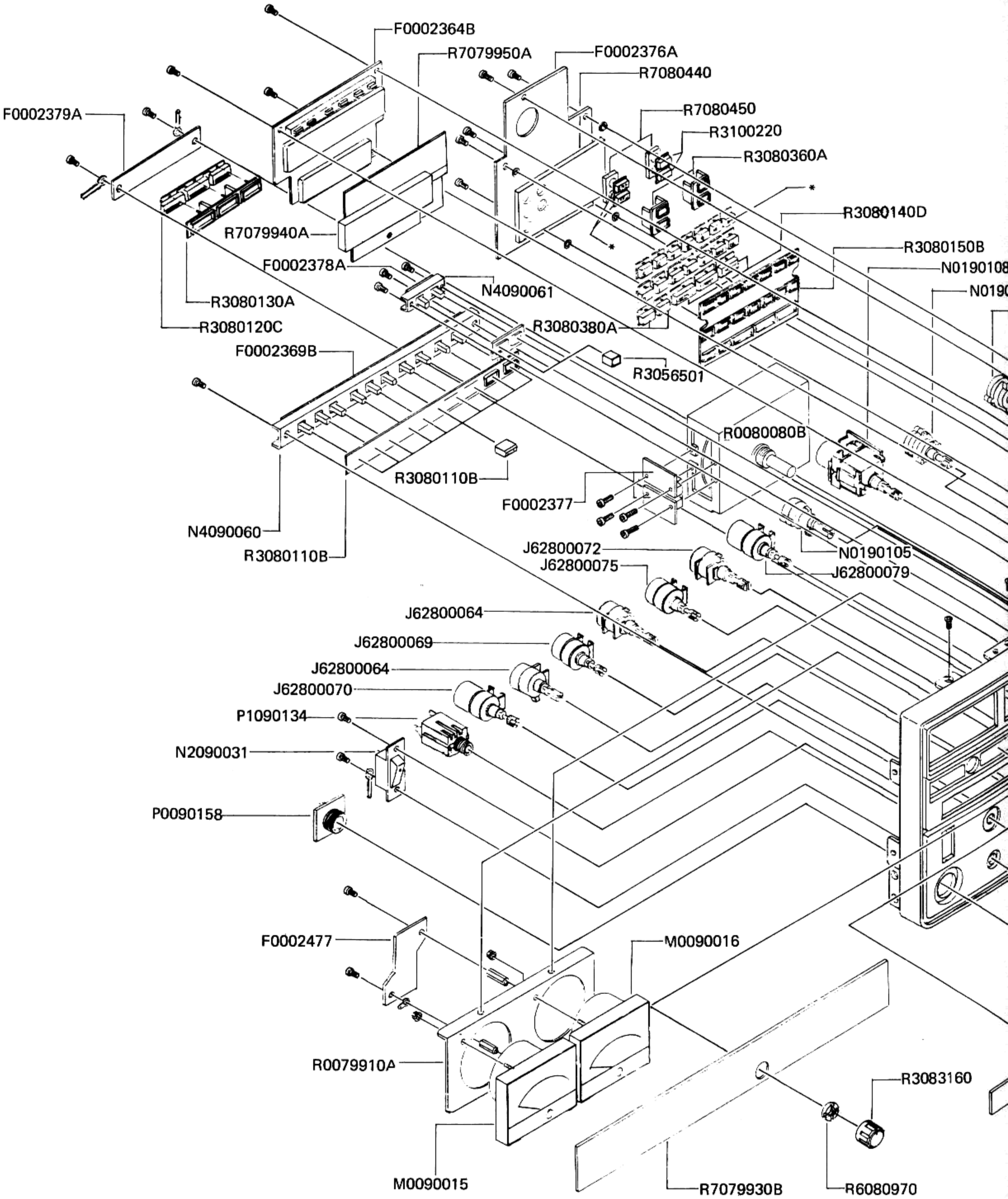

RONT PANEL EXPLODED VIEW

* KEY-TOP

R3080370A	V/U	R3080406C	CE
R3080371A	LDB	R3080390C	5
R3080400C	0	R3080391C	6
R3080401C	1	R3080392C	7
R3080402C	2	R3080393C	8
R3080403C	3	R3080394C	9
R3080404C	4	R3080395C	◀
R3080405C	ENT	R3080396C	▶

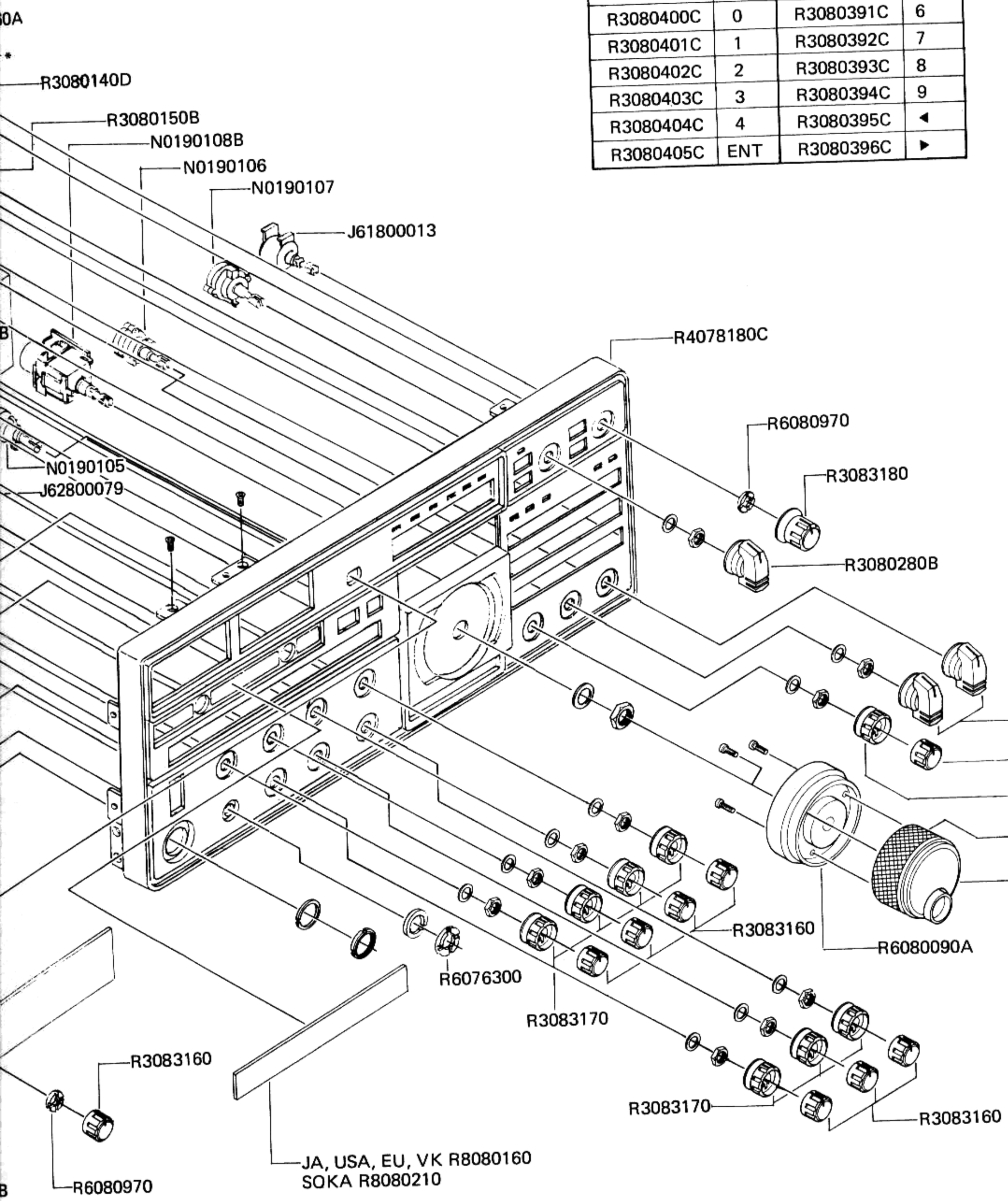

REAR PANEL EXPLODED VIEW 2

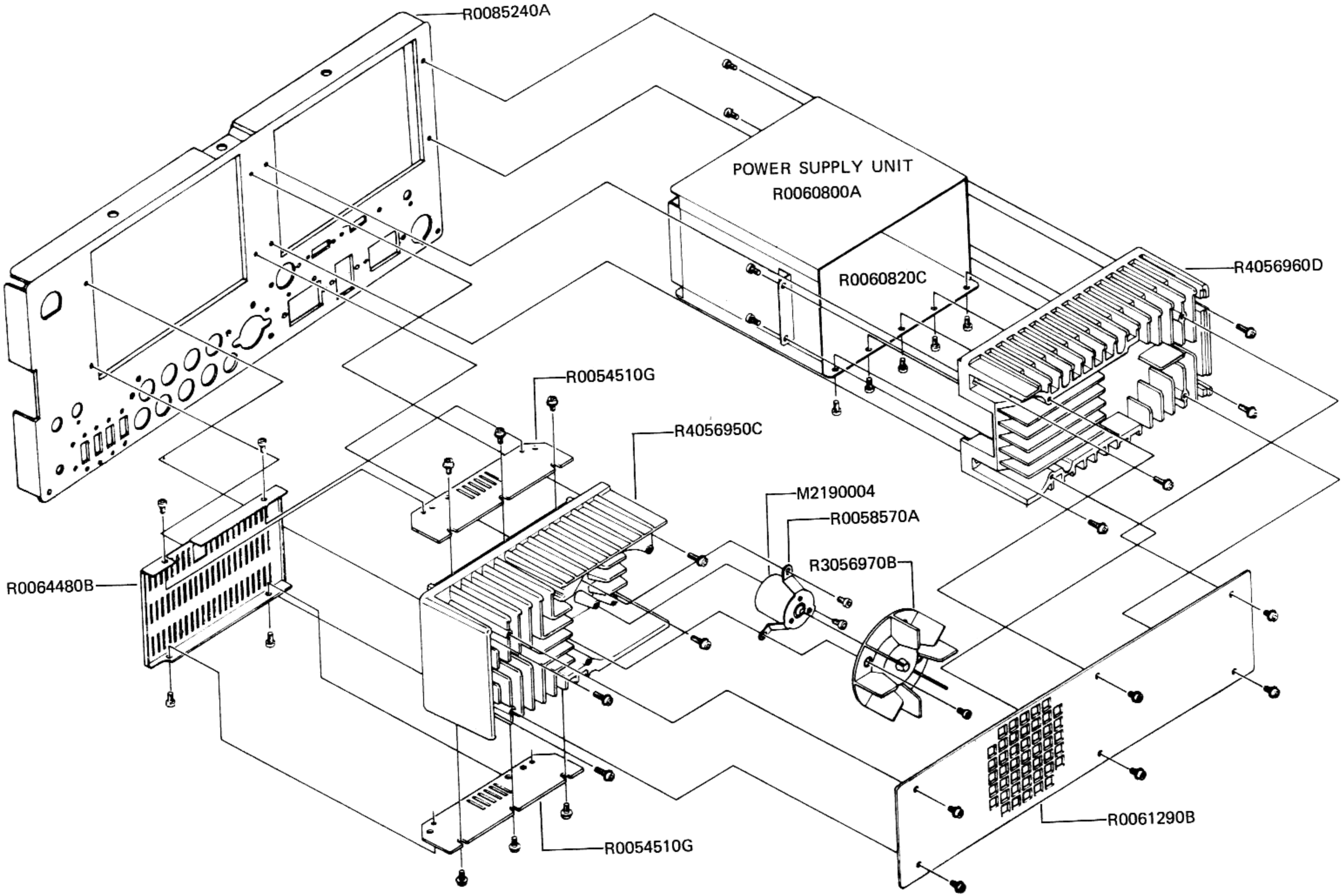

REAR PANEL EXPLODED VIEW 1

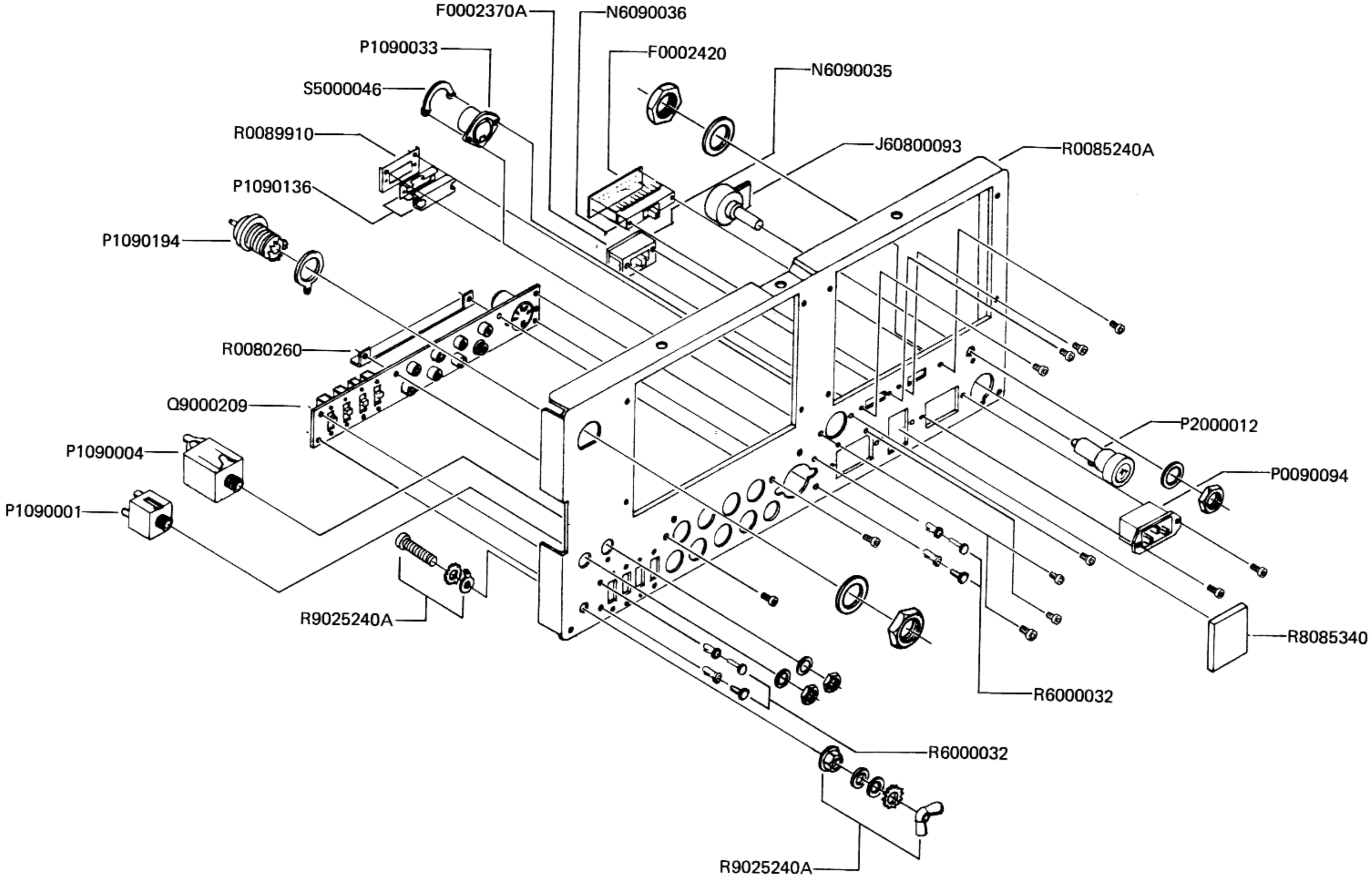

REAR PANEL EXPLODED VIEW 2

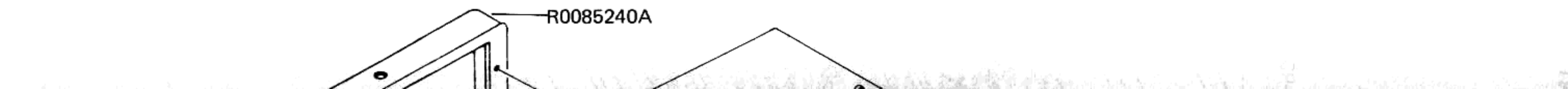

PARTS LIST

MAIN CHASSIS		
Symbol No.	Part No.	Description
		IC
Q3	G1090294	μPC7808H
		TRANSISTOR
Q1	G3110120Y	2SA1012Y
Q4	G3208560B	2SB856B
Q2	G3408800	2SD880-O
		DIODE
D1–6	G2090027	Si 1SS53
		RESISTOR
R16,17	J20306569	Metallic film 1W 5.6Ω
R1,2	J01275101	Carbon film 1/2W TJ 100Ω
R6	J01245272	" " 1/4W TJ 2.7kΩ
R7	J01245681	" " " " 680Ω
R8,12	J01245682	" " " " 6.8kΩ
R13	J01245105	" " " " 1MΩ
R5,15	J01245152	" " " TJ 1.5kΩ
		POTENTIOMETER
VR1	J62800069	K16BA004C-10KAX2 10kΩA/10kΩA
VR2	J62800070	K16BA1018-5M1222-20KC-500KB 20kΩC/500kΩB
VR3	J62800075	K16BA004C-50KB-5KA 50kΩB/5kΩA
VR4	J62800072	K16BA004C-2KC-10KB 2kΩC/10kΩB
VR5,6	J62800064	K16BA004C-10KB-10KA 10kΩB/10kΩA
VR7(with S11)		
VR8	J62800079	K16BA1-5M1112-500KC-10KA 500kΩC/10kΩA
VR9	J61800013	K162B00B8J-20KBX2 20kΩBX2
VR10	J60800093	K1611007AC-5KB 5kΩB
VR11	J50710503	V10K8-1-2-50KB 50kΩB
		CAPACITOR
C1,3	K12329001	Ceramic 1.4KV 0.01μF (ECKDAL103PE)
C4,9–14,25,29	K13179008	" 50WV 0.01μF (DD106F103Z50V)
C18,28	K13179009	" " 0.047μF (DD110F473Z50V)
C20–23,27,30	K12171102	" " 0.001μF (DD104E102P50V)
C24	K02175470	" " CH47pF (DD106CH470J50V)
C16,17	K40129004	Electrolytic 16WV 10μF (16RE10)
C26	K40129010	" " 2200μF (16RE2200)
C19	K70120002	Tantalum 16WV 10μF (489D106X0016C1)
C5	K21170002	Ceramic feed thru 50WV (ECK-Y1H-102WE) 0.001μF
		INDUCTOR
L2	L1190040	S4 1mH
L3	L1190135	LAL04NA561K
L5	L1190023	FL5H-220K 22μH
L4	L1190090	LAL04NA102K 1mH

		METER
M1	M0090015	IC, PO
M2	M0090016	S, ALC
		SPEAKER
SP1	M4090057	SE-92BF 4Ω 3W
		RELAY
RL1	M1190049	LR1A-12
		SWITCH
S1	N0190105	SRN2045 (Meter)
S2	N0190106	SRN2018 (Mode)
S3	N0190107	SRN303C (Memory)
S4	N2090031	EST157R (Power)
S5		P/O UD-0113 (SEP/NOR)
S6	Q9000209	Terminal Board (MARKER)
S7		(KB TONE)
S8		(LIN AMP)
S9	N6090035	SSB02302 (FSK Shift)
S10	N6090036	SSB043036A (CW Pitch)
S11 (VR7)	N0190108B	SRS101Z
PB-2370A	F0002370A	Printed Circuit Board
	C023700A	PCB with S11 (VR7), R5
PB-2420	F0002420	Printed Circuit Board
	C024200A	PCB with S10
		RECEPTACLE
J1	P0090094	PA-125 (AC Power)
J3	P1090134	SG7627 (Phones)
J4	P1090001	SG7701 (Key 1)
J5	P1090004	SG7814 (Key 2)
J6	P1090033	D6-701B-00 (EXT CNTL)
J8	P1090136	S-1628A-STA
J9	P1090194	FM-MR-M2' (Ant)
J11	P0090158	FM-214-8SS (Mic)
J12	P1090133	STR-01H
J7		UC-0007 P/O UD-0113
J15–21	Q9000209	UA-0001 Terminal Board
J22		UK-0002
		FUSE HOLDER
FH1	P2000012	SN2059
FH2	P2000025	H203
FH3	P2000026	H202
		FUSE
	Q0000004	3A AC 10W Type
	Q0000005	5A AC 200–234VAC
	Q0000007	10A AC 100–117VAC
	Q0000031	13.6A DC
	Q0000032	6A DC
		BATTERY HOLDER
	P2000013	C3 (UM3X2)
	P2000018	S1 SNAP with wire 500mm

T

REAR PANEL EXPLODED VIEW

		TERMINAL BLOCK	
	Q6000061	ML-3182-15P	
		KNOB	
	R3077820C	FT-50U	Main Tuning
	R3078110C	Rubber ring	
	R6080090A	Sub dial	
	R3083170	FT-19WDNS	VOX,COMP,NB, KEYER, RF, SQL,APF,SHIFT
	R3083180	FT-19WK	FWD SET
	R3080280B	FT-16VK	MEMORY, MODE,ATT
	R3083160	FT-14WK	DELAY,MIC, DRIVE,MONI, AF,TONE, NOTCH,WIDTH
	R3080100B	KEY TOP A	MOX -AGC
	R3080120B	B	DOWN,FAST,UP
	R3080140C	C	5kHz DOWN-UP BAND DOWN-REPEAT-UP
	R3080370A	D	LDB,V/U
	R3080380A	E	WRITE 1,2
	R3080400B	F(1–7)	0,1,2,3,4,ENT, CE
	R3080390B	G(1–7)	5,6,7,8,9,◄,►
	R3056501	Push Knob	DIM,LOCK

RF UNIT

Symbol No.	Part No.	Description
PB-2389A	F0002389A	Printed Circuit Board
	C023890A	PCB with Components
		IC
Q1043	G1090246	AN6552
Q1032,1033	G1090088	MC14028B
Q1034,1035	G1090053	MC14081B
Q1028–1031	G1090514	μPA2004C
Q1013,1016,1038	G1090394	μPC1458C
Q1036	G1090084	μPC78L05
		FET
Q1005–1011,1020	G3801250	2SK125
Q1018	G4800730G	3SK73GR
Q1037	G3801700C	2SK107-3
		TRANSISTOR
Q1012,1021	G3090010	2N4427
Q1001,1014	G3107331P	2SA733AP
Q1025–1027,1040	G3107331P	2SA733AP
Q1003	G3110120Y	2SA1012Y
Q1004,1015,1017	G3318150G	2SC1815GR
Q1002,1023,1024, 1039,1041,1042	G3318150Y	2SC1815Y
Q1022,1044	G3319590Y	2SC1959Y
Q1019	G2090135	ND487C2-3R
		DIODE
D1001–1004, 1018–1020,1022, 1024,1026,1028, 1030,1032,1034, 1036,1038, 1048–1051, 1057,1058, 1061–1093,1096	G2090027	Si 1SS53
D1021	G2090132	Si 1SS55
D1006–1017, 1023,1025,1027, 1029,1031,1033, 1035,1037,1039, 1046,1047,1055, 1056	G2090118	Si 1SS97
D1005	G2090185	Zener HZ5C-2
D1052,1054	G2090218	" HZ9C-1
D1095	G2090257	" RD33EB1
D1059	G2090041	Varistor MV-103
		CRYSTAL FILTER
XF1001	H1102060	XF-47JX
		RESISTOR
R1080	J02245479	Carbon Film 1/4W SJ 4.7Ω
R1133	J02245689	" " " " 6.8Ω
R1124	J02245180	" " " " 18Ω
R1028,1064	J02245220	" " " " 22Ω
R1126,1181	J02245470	" " " " 47Ω
R1030,1038,1071, 1081	J02245560	" " " " 56Ω
	J00275560	" " 1/2W VJ 56Ω
R1031,1037	J02245680	" " 1/4W SJ 68Ω
R1033	J01245680	" " " TJ 68Ω
R1008,1036,1040, 1117,1120,1135, 1165	J02245101	" " " SJ 100Ω
R1012–1017, 1019,1021,1023, 1025,1032,1047, 1049,1051, 1053–1058, 1076,1138,1151	J01245101	" " " TJ 100Ω
R1136	J02245151	" " " SJ 150Ω
R1034	J01245221	" " " TJ 220Ω
R1122,1134	J02245221	" " " SJ 220Ω
R1123,1125	J02245271	" " " " 270Ω
R1045	J02245331	" " " " 330Ω
R1130,1177	J02245391	" " " " 390Ω
R1009,1011,1042, 1077,1150	J02245471	" " " " 470Ω
R1027,1070,1079,	J02245561	" " " " 560Ω
R1029,1066–1069	J02245681	" " " " 680Ω
R1035	J01245821	" " " TJ 820Ω
R1078,1131,1141	J02245821	" " " SJ 820Ω
R1004,1039,1044, 1087,1104,1139, 1166	J02245102	" " " " 1kΩ
R1132	J02245122	" " " " 1.2kΩ

R1075	J02245182	Carbon Film	1/4W	SJ	1.8kΩ		
R1159,1163, 1172*	J02245222	"	"	"	2.2kΩ		
R1043	J01245392	"	"	TJ	3.9kΩ		
R1001,1147,1149, 1161,1171,1174	J02245472	"	"	SJ	4.7kΩ		
R1005,1050,1091, 1093,1105,1153, 1167,1169	J02245562	"	"	"	5.6kΩ		
R1116,1121,1164	J02245682	"	"	"	6.8kΩ		
R1048,1175*	J02245822	"	"	"	8.2kΩ		
R1002,1003,1010, 1018,1020,1022, 1024,1041,1062, 1063,1073,1074, 1082,1090,1097, 1098,1100,1101, 1107–1109, 1111,1112,1114, 1115,1129,1137, 1140,1142,1144, 1146,1148, 1155–1157, 1162,1168	J02245103	"	"	"	10kΩ		
R1178	J01215103	"	"	1/8W	TJ 10kΩ		
R1143	J01245103	"	"	1/4W	TJ 10kΩ		
R1052	J02245123	"	"	"	SJ 12kΩ		
	J02245183	"	"	"	18kΩ		
R1046,1158	J02245223	"	"	"	22kΩ		
R1179	J01215223	"	"	1/8W	TJ 22kΩ		
R1006,1175	J02245333	"	"	1/4W	" 33kΩ		
	J02245393	"	"	"	39kΩ		
R1192	J02245473	"	"	"	47kΩ		
R1152	J02245563	"	"	"	56kΩ		
R1102	J01245683	"	"	"	TJ 68kΩ		
R1127	J01245823	"	"	"	82kΩ		
R1128	J02245823	"	"	"	SJ 82kΩ		
R1072, 1083–1086, 1094,1096,1103, 1106,1118,1170, 1173	J02245104	"	"	"	100kΩ		
	J01245104	"	"	"	TJ 100kΩ		
R1119	J02245124	"	"	"	SJ 120kΩ		
R1088	J02245224	"	"	"	220kΩ		
R1110	J02245474	"	"	"	470kΩ		
R1026,1065,1113	J02245225	"	"	"	2.2MΩ		
R1160	J02245335	"	"	"	3.3MΩ		
R1089	J02245565	"	"	"	5.6MΩ		
		BLOCK RESISTOR					
RB1001 1003	J40900029	EXB-P86-103	10kΩx6				
RB1004	J40900049	EXB-P89-473	47kΩx8				
		POTENTIOMETER					
VR1003,1004	J51752502	RGS6-FAN	5kΩ				
VR1002	J51752203	"	20kΩ				
VR1005	J51752303	"	30kΩ				
VR1001	J51752503	"	50kΩ				
		LAMP FUSE					
F1001	Q1000010	BQ041-22803A					
		CAPACITOR					
C1118	K02179004	Ceramic	50WV	CH	3pF (DD104CH030C50V)		
	K02172040	"	"	"	4pF (DD104CH040C50V)		
C1113	K02172050	Ceramic	50WV	CH	5pF (DD104CH050C50V)		
C1101,1103	K02173060	"	"	"	6pF (DD104CH060D50V)		
C1094, 1096,1119	K02173070	"	"	"	7pF (DD104CH070D50V)		
C1108	K02173080	"	"	"	8pF (DD104CH080D50V)		
C1112,1117	K02173090	"	"	"	9pF (DD104CH090D50V)		
C1102	K02173100	"	"	"	10pF (DD104CH100D50V)		
C1050,1052,1095, 1107	K02175120	"	"	"	12pF (DD104CH120J50V)		
C1041,1045,1100	K02175180	"	"	"	18pF (DD104CH180J50V)		
C1090	K02179008	"	"	"	20pF (DD104CH200J50V)		
C1051,1146	K02179009	"	"	"	22pF (DD104CH220J50V)		
C1042,1044,1086, 1248	K02175270	"	"	"	27pF (DD104CH270J50V)		
C1032,1036,1167, 1168	K02175330	"	"	"	33pF (DD104CH330J50V)		
	K02175390	"	"	"	39pF (DD105-257CH390J50V)		
C1033,1035,1082	K02175470	"	"	"	47pF (DD106CH470J50V)		
C1043	K02175560	"	"	"	56pF (DD106CH560J50V)		
C1065,1066,1144, 1236	K02175680	"	"	"	68pF (DD107CH680J50V)		
C1023,1024,1026, 1027,1201,1202	K02175820	"	"	"	82pF (DD107CH820J50V)		
	K02175101	"	"	"	100pF (DD107CH101J50V)		
C1143	K02179020	"	"	"	110pF (DD108CH111J50V)		
C1010,1013,1034	K02175121	"	"	"	120pF (DD109CH121J50V)		
C1078,1147	K02179021	"	"	"	130pF (DD109CH131J50V)		
C1014,1018	K02175151	"	"	"	150pF (DD109CH151J50V)		
C1015,1017,1145	K02179023	"	"	"	180pF (DD110CH181J50V)		
C1025	K02179027	"	"	"	270pF (DD112CH271J50V)		
C1016	K30176471	Dipped Mica	"		470pF (Z8D471K05)		
C1011,1012	K30176561	"	"	"	560pF (LCQ18561K05)		
C1069,1071	K30276182	"	"	500WV	1800pF (LCQ30182K5)		
C1070	K30276102	"	"	"	0.001μF (LCQ21102K5)		
C1136,1138,1161, 1162,1166,1196, 1234,1235	K12171102	Ceramic	50WV	E	0.001μF (DD104E102P50V)		
C1003,1009,1046, 1049,1053,1056, 1057,1059,1081, 1085,1089,1093, 1098,1099,1105, 1106,1110,1111, 1115,1116,1121 1241	K13179008	"	"	F	0.01μF (DD106F103Z50V)		

* 10W Type

C1122,1139,1142, 1156–1160, 1163–1165, 1173,1177,1178, 1181, 1187–1190, 1194,1210,1211, 1216–1221, 1230,1231,1233, 1238	K13179008	Ceramic 50WV F 0.01μF (DD106F103Z50V)
C1005,1008, 1019,1022,1028, 1031,1037,1040, 1058,1060,1062, 1064,1068,1072, 1074,1076,1077, 1080,1084,1088, 1092,1137,1140, 1141,1149,1151, 1152,1154,1169, 1171,1172,1182, 1183, 1191–1193, 1195,1197,1198, 1200,1203,1204, 1206,1208,1209, 1214,1226,1237	K13179009	" " " 0.047μF (DD110F473Z50V)
C1006	K19149021	Semiconductor Ceramic 25WV 0.047μF (UAT08X473KL45AE)
C1185,1239	K19149025	" 25WV 0.1μF (UAT13X104KL46AE)
C1223,1224	K50177473	Mylar 50WV 0.047μF (50F2U473M)
C1227,1228	K50177104	" " 0.1μF (50F2U104M)
C1229	K70167224	Tantalum 35WV 0.22μF (CS15E1VR22M)
C1174	K70127225	" 16WV 2.2μF (CS15E1C2R2M)
C1083	K70120008	" " 22μF (489D226X0016D1)
C1184	K40179010	Electrolytic 50WV 0.47μF (50RER47)
C1007,1061,1073, 1075,1148,1150, 1153,1199,1205	K40179013	" " 1μF (50RE1)
C1063,1155,1170, 1179,1180,1186, 1207,1222,1225	K40149008	" 25WV 10μF (25RE10)
C1175	K40129012	" 16WV 10μF (ECEA1CK100)
C1001,1004,1020, 1021,1029,1030, 1038,1039,1047, 1048,1054,1055, 1079,1087,1091, 1097,1104,1109, 1114,1120,1215	K40129016	" " 22μF (16RE22)
C1002	K40129007	Electrolytic 16WV 100μF (16RE100)
		INDUCTOR
L1032,1037,1044	L0021221	LPF COIL 0.17μH
L1038	L0021222	" 0.24μH
	L0021220	" 0.32μH
L1052	L0021245	" 0.42μH
L1041	L1190005	FL4H-1R0M 1μH
L1028	L1190008	FL4H-2R2M 2.2μH
L1023,1027,1029, 1066	L1190010	FL4H-3R9K 3.9μH
L1033,1034,1042, 1049,1053–1059	L1190011	FL4H-4R7K 4.7μH
L1026,1030	L1190111	FL4H-5R6K 5.6μH
L1018	L1190013	FL4H-6R8K 6.8μH
L1022,1024	L1190070	FL4H-8R2M 8.2μH
L1013,1043, 1046	L1190014	FL4H-100K 10μH
L1021,1025	L1190015	FL4H-120K 12μH
L1017,1019	L1190021	FL5H-180K 18μH
L1016,1020	L1190023	FL5H-220K 22μH
L1008	L1190073	FL5H-270K 27μH
L1011	L1190025	FL5H-330K 33μH
L1012,1014	L1190027	FL5H-390K 39μH
L1002,1004,1007, 1009	L1190031	FL5H-680K 68μH
L1050	L1190033	FL5H-820K 82μH
L1006,1010,1035, 1040,1060	L1190016	FL5H-101K 100μH
L1045	L1190133	LAL04NA101K 100μH
L1003	L1190018	FL5H-121K 120μH
L1031,1036,1047, 1051,1068	L1190017	FL5H-102K 1mH
L1039,1061,1063,	L1190090	LAL04NA102K 1mH
L1001,1005,1048, 1064,1067	L1190040	S-4 1mH
	L1190142	LAL04NA5R6K 5.6μH
	L9190016	7mm Shield Case
		TRANSFORMER
T1001,1002	L0021362	
T1027	L0020789A	
T1003,1004	L0020899	RF COIL 160m
T1005,1006	L0020781	" 80m
T1007,1008	L0020782	" 40m
T1009,1010	L0020892	" 30m
T1011,1012	L0020783	" 20m
T1013,1014	L0020890	" 17m
T1015,1016	L0020784	" 15m
T1017,1018	L0020785	" 12m
T1019,1020	L0020893	" 10m
T1028,1033,1034	L0020788A	
T1029	L0021223	
T1030	L0021224	
T1031,1032	L0021225	
		RELAY
RL1001	M1190027	G2V-2 9V
		SWITCH
S1001	N0190109	SBU2044N(10)-R15
		TERMINAL
	Q5000050	TP Terminal TP-K
	Q5000011	Wrapping Terminal C
		CONNECTOR
J1001–1005	P1090210	TMP-JV
J1012,1015,1017, 1018	P0090218	5045-02A
J1007,1016	P0090220	5045-04A
J1010,1011,1014	P0090221	5045-05A

J1006,1008,1009	P0090222	5045-06A
J1013	P0090223	5045-07A
J1019	P0090186	EMCS 0352M
		PLUG
P1001	P1090249	EMCM0201
	Q9000192	30F-T0-220 INSULATOR
	Q9000120	AC311 "
	R5047915B	HEAT SINK (T0-5)
	R0083300A	
		JUMPER CONNECTOR
JP1001	T9204447	5295-06 with wire
JP1002	T9204448	" " "

IF UNIT

Symbol No.	Part No.	Description
PB-2390A	F0002390A	Printed Circuit Board
	C	PCB with Components
		FET
Q2001,2002	G3090035	2SK19TMGR
Q2036	G3801250	2SK125
Q2004,2005,2009, 2016,2041,2042	G4800730G	3SK73GR
		IC
Q2023	G1090248	AN6551
Q2018	G1090072	μPC577H
Q2015	G1090394	μPC1458C
Q2039	G1090413	TA7302P
		TRANSISTOR
Q2040,2045,2046	G3107331P	2SA733AP
Q2034	G3207740	2SB774
Q2003,2026,2029, 2030,2037	G3303800Y	2SC380Y
Q2024,2025	G3315830G	2SC1583G
Q2008	G3318150B	2SC1815BL
Q2012,2028,2033, 2035,2038,2043	G3318150G	2SC1815GR
Q2006,2007,2010, 2011,2013,2014, 2017, 2019–2022,2027	G3318150Y	2SC1815Y
Q2032	G3319230R	2SC1923R
Q2031	G3319590Y	2SC1959Y
		DIODE
D2015–2017, 2021–2023, 2027,2028,2031, 2032,2034,2035	G2090029	Ge 1N60
D2018,2019,2066	G2090093	Ge 1N270
D2029	G2015550	Si 1S1555
D2025	G2001880F	Ge 1S188FM
D2014	G2090038	Schottky 1SS16
D2001, 2004–2012,2020, 2024,2026,2033, 2036–2045, 2052–2059, 2061–2065, 2067,2071	G2090027	Si 1SS53
D2002,2003, 2046–2051, 2072–2074	G2090118	Schottky 1SS97
D2030	G2090023	Varactor 1SV50
D2013	G2090161	" 1SV55
D2060	G2090040	" FC63
D2070	G2090182	Zener HZ7A-2
		RELAY
RL2001	M1190002	FBR211AD012M
		CRYSTAL
X2001	H0102456	HC-18/U 8532.5kHz
		CRYSTAL FILTER
XF2001	H1100470	8.9M20A
XF2002(CW)	H1102065	XF-455.8MCN (Option)
XF2003	H1102062	XF-8.9LP
XF2004(AM)	H1102063	XF-8.9HA (Option)
XF2005	H1102069	XF-8.9HSM
XF2006(CW)	H1100880	XF-8.9HC (Option)
		CERAMIC FILTER
CF2001		CFM-455H
CF2002	H3900041	CFM-455J1
CF2003	H3900200	CFW-455E
CF2004	H3900030	LF-B15
		CERAMIC DISCRI
CD2001	H7900040	SFD-455S4
		RESISTOR
R2176	J02245470	Carbon film 1/4W SJ 47Ω
	J02245560	" " " " 56Ω
R2010,2026,2027, 2035,2043,2055, 2060,2093,2101, 2129,2133,2138, 2152,2159,2165, 2178,2181,2187, 2193, 2219–2220	J02245101	" " " " 100Ω
R2029,2032,2162, 2204–2206	J01245101	" " " TJ 100Ω
R2042,2059,2237, 2238,2243	J02245151	" " " SJ 150Ω
R2253	J01245181	" " " " 180Ω
R2013,2047,2048, 2063,2067,2078, 2158,2164,2213, 2216,2217,2246	J02245221	" " " " 220Ω
R2189	J01245221	" " " TJ 220Ω

R2194	J02245271	Carbon film	1/4W	SJ	270Ω		
R2038,2221,2244	J02245331	"	"	"	330Ω		
R2245	J00215331	"	1/8W	VJ	330Ω		
R2001,2007,2008, 2016,2017,2024, 2046,2094,2118, 2198, 2201–2203, 2209,2236	J02245471	"	1/4W	SJ	470Ω		
R2012,2062,2072, 2079,2154,2155, 2222	J02245561	"	"	SJ	560Ω		
R2002,2179,2196, 2252	J02245681	"	"	SJ	680Ω		
R2180,2239	J02245821	"	"	"	820Ω		
R2069,2096,2098, 2108,2136,2146, 2149,2150,2156, 2184,2185,2212, 2223,2226	J02245102	"	"	"	1kΩ		
R2056,2153	J02245122	"	"	"	1.2kΩ		
R2045,2115,2188, 2195	J02245152	"	"	"	1.5kΩ		
R2192	J02245182	"	"	"	1.8kΩ		
R2014,2015,2097, 2099,2100,2127, 2139,2234	J02245222	"	"	"	2.2kΩ		
R2068,2109,2111, 2113,2130	J02245332	"	"	"	3.3kΩ		
R2028,2030,2031, 2033,2034,2036, 2037,2240	J02245392	"	"	"	3.9kΩ		
R2085,2125,2126, 2132,2135,2147, 2183,2207	J02245472	"	"	"	4.7kΩ		
R2070,2102,2103, 2114,2137,2224	J02245562	"	"	"	5.6kΩ		
R2128,2131,2190, 2218	J02245682	"	"	"	6.8kΩ		
R2191	J01245682	"	"	TJ	6.8kΩ		
R2050	J02245822	"	"	SJ	8.2kΩ		
R2003,2018,2020, 2022,2023,2039, 2049,2052,2058, 2076,2089,2104, 2117,2122,2141, 2144,2163,2171, 2174,2186,2197, 2200,2208,2214, 2230–2233	J02245103	"	"	"	10kΩ		
R2119,2241,2242	J01245103	"	"	TJ	10kΩ		
R2009,2086,2123, 2145,2211,2247	J02245153	"	"	SJ	15kΩ		
R2073	J01245183	"	"	TJ	18kΩ		
R2091,2105,2134, 2148,2182	J02245223	"	"	SJ	22kΩ		
R2139	J01245223	"	"	TJ	22kΩ		
R2143,2151,2172, 2248	J02245273	"	"	SJ	27kΩ		
R2161,2169,2170	J02245333	"	"	"	33kΩ		
R2065,2140,2157	J02245393	"	"	"	39kΩ		
R2021,2057,2107	J02245473	"	"	"	47kΩ		
R2083,2116	J02245563	"	"	"	56kΩ		
R2064	J02245683	"	"	"	68kΩ		
R2053,2177	J02245823	"	"	"	82kΩ		
R2004,2005,2011, 2019,2040,2054, 2061,2071,2077, 2080,2081,2084, 2087,2088,2090	J02245104	"	"	"	100kΩ		
R2142,2166,2173, 2175,2210,2215, 2225,2251	J02245104	Carbon film	1/4W	SJ	100kΩ		
R2106,2168	J02245124	"	"	"	120kΩ		
R2041,2110,2112, 2167	J02245154	"	"	"	150kΩ		
R2095	J02245184	"	"	"	180kΩ		
R2051	J02245334	"	"	"	330kΩ		
R2120,2121,2124	J02245564	"	"	"	560kΩ		
R2044,2228,2229,	J02245684	"	"	"	680kΩ		
	J02245105	"	"	"	1MΩ		
R2074,2084,2227	J02245155	"	"	"	1.5MΩ		
	J02245225	"	"	"	2.2MΩ		
						POTENTIOMETER	
VR2001	J51752102	RGS6-FAN			1KB		
VR2002	J51752502	"			5KB		
VR2004,2006, 2007	J51752103	"			10KB		
VR2003,2005, 2008	J51752503	"			50KB		
VR2010	J51752104	"			100KB		
VR2009	J51752105	"			1MB		
						BLOCK RESISTOR	
RB2001	J40900024	RK1/16B5R10K			10Kx5		
						CAPACITOR	
C2130,2171	K00172030	Ceramic disc	50WV	SL	3pF (DD104SL030C50V)		
C2138	K06172030	"	"	UJ	3pF (DD104UJ030C50V)		
C2133,2174,2184, 2210,2220,2221	K00173100	"	"	SL	10pF (DD104SL100D50V)		
C2148	K00175150	"	"	"	15pF (DD104SL150J50V)		
C2147	K00175330	"	"	"	33pF (DD104SL330J50V)		
C2002,2115	K00175470	"	"	"	47pF (DD104SL470J50V)		
C2213	K02175560	"	"	CH	56pF (DD106CH560J50V)		
C2010,2019,2020, 2047,2057,2063, 2064,2079,2091, 2092,2113,2136, 2175	K00175101	"	"	SL	100pF (DD105SL101J50V)		
C2134	K00175221	"	"	"	220pF (DD107SL221J50V)		
C2139,2140,2142	K06179018	"	"	UJ	330pF (DD110UJ331J50V)		
C2003,2066,2067, 2074,2081,2083, 2201,2219	K12171102	"	"	E	0.001μF (DD104E102P50V)		
C2001,2004, 2006–2008, 2011,2012, 2015–2018, 2021,2022,2026, 2028,2030,2032, 2034,2036,2039, 2042,2048,2052, 2053,2055,2061, 2075,2080,2082	K13179008	"	"	F	0.01μF (DD106F103Z50V)		

C2093,2122,2126, 2127,2129,2131, 2137,2141,2143, 2144, 2149–2157, 2159, 2167–2170, 2172,2176, 2178–2183, 2185, 2186–2200, 2202,2203, 2205–2209, 2214–2217	K13179008	Ceramic disc 50WV F 0.01μF (DD106F103Z50V)	C2014,2073,2078, 2084,2086,2087, 2118,2119,2121, 2161,2212	K40149008	Electrolytic 25WV 10μF (25RE10)
			C2099,2104,2211	K40129016	〃 16WV 22μF (16RE22)
			C2177	K40129007	〃 〃 100μF (16RE100)
					TRIMMER CAPACITOR
C2005,2009,2023, 2025,2027,2029, 2031,2033,2035, 2037,2038,2040, 2043,2045,2046, 2051,2054,2056, 2058,2059,2065, 2068, 2070–2072, 2088 2090, 2094,2120,2123, 2141,2145,2146, 2158,2162,2204	K13179009	〃 〃 〃 〃 0.047μF (DD110F473Z50V)	TC2001	K91000093	CTZ51F 30pF
					THERMISTOR
			TH2001	G9090001	SDT-250
			TH2002	G9090012	SDT-500
					INDUCTOR
			L2010–2012,2015	L1190014	FL4H-100K 10μH
			L2001	L1190134	S4-180K 18μH
C2105	K19149001	Semiconductor Ceramic 25WV 0.001μF (UAT04X102K-L05AE)	L2008	L1190023	FL5H-220K 22μH
			L2009, 2016–2022,2024	L1190016	FL5H-101K 100μH
C2112,2114,2117, 2125,2128,2132, 2165,2166,2173	K19149013	〃 〃 〃 0.01μF (UAT05X103K-L05AE)	L2002, 2004–2007, 2013,2023,2025, 2026,2027	L1190017	FL5H-102K 1mH
C2106,2107	K19149017	〃 〃 〃 0.022μF (UAT06X223K-L45AE)			
C2108	K19149019	〃 〃 〃 0.033μF (UAT08X333K-L45AE)	L2003	L0021196	
			L2014	L0021227	
C2024,2041,2044, 2062, 2095–2098, 2100–2103,2116	K19149021	〃 〃 〃 0.047μF (UAT08X473K-L45AE)			**TRANSFORMER**
			T2003–2005, 2011,2012, 2015–2017	L0020140	
C2013,2041	K19149025	〃 〃 〃 0.1μF (UAT13X104K-L46AE)	T2014	L0020141	
C2050	K50177102	Mylar 50WV 0.001μF (50F2U102M)	T2008	L0020421	
			T2007,2009	L0020420	
C2069	K50177222	〃 〃 0.0022μF (50F2U222M)	T2006,2010	L0020422	
			T2001,2020	L0021225	
C2077	K50177223	〃 〃 0.022μF (50F2U223M)	T2002	L0021231	
			T2013	L0021233	
C2160	K50177104	〃 〃 0.1μF (50F2U104M)	T2018	L0021087B	
			T2019	L0020209	
C2085	K50176224	〃 〃 0.22μF (MRS50V224K)			
C2049	K51176102	Styrol 〃 0.001μF (50SU102K)			**CONNECTOR**
			J2003,2004,2007	P0090218	5045-02A
C2060	K70167334	Tantalum 35WV 0.33μF (CS15E1VR33M)	J2005	P0090219	5045-03A
			J2009	P0090220	5045-04A
C2076	K70147105	〃 25WV 1μF (CS15E1E010M)	J2001,2006	P0090221	5045-05A
			J2002	P0090222	5045-06A
C2163	K70127225	〃 16WV 2.2μF (CS15E1C2R2M)	J2008	P0090226	5045-10A
			J2010–2016	P1090210	TMPJV
C2124	K70120002	〃 〃 10μF (489D106X0016C1)			
C2135	K70120008	〃 〃 22μF (489D226X0016D1)		Q5000036	TP-G
C2109	K40179016	Electrolytic 50WV 0.1μF (50RE0R1)		P0090183	SMF Connector RT-01T-1.0B
C2111	K40179013	〃 〃 1μF (50RE1)			
C2218	K40179012	〃 〃 4.7μF (50RE4R7)			

T

AF UNIT

Symbol No.	Part No.	Description		
PB-2375A	F0002375A	Printed Circuit Board		
	C023750A	PCB with Components		
		FET		
Q3010	G3801070C		2SK107-3	
Q3021	G4800730G		3SK73GR	
		IC		
Q3026	G1090248		AN6551	
Q3009	G1090340		MC1496P	
Q3019	G1090068		MC14011B	
Q3023	G1090257		MC14066B	
Q3028	G1090284		μPC2002V	
Q3029	G1090084		μPC78L05	
Q3037	G1090118		NJM78L09A	
Q3038	G2090220		ND487R1-3R	
		TRANSISTOR		
Q3018	G3105641		2SA564AR	
Q3031,3033,3035	G3107331P		2SA733AP	
Q3032,3034	G3109500Y		2SA950Y	
Q3030,3036	G3207740		2SB774	
Q3001	G3307320G		2SC732GR	
Q3002–3008, 3011,3012,3015, 3016,3024,3025, 3027	G3309451		2SC945AP	
Q3013,3014,3017, 3020	G3318150G		2SC1815GR	
Q3022	G3318150Y		2SC1815Y	
		DIODE		
D3025,3029	G2090093	Ge	1N270	
D3002,3003	G2001880F	"	1S188FM	
D3001, 3006–3024, 3026,3030, 3032, 3035–3037, 3039–3043, 3045,3046	G2090027	Si	1SS53	
D3004	G2090180	Varactor	FC53M-5	
D3005	G9090005	Varistor	MV103	
D3028,3031	G2090188	Zener	HZ5C-1	
D3044	G2090154	"	RD7.5FB-1	
		CRYSTAL		
X3001	H0102472	HC-18/T3P	8987.5kHz	
		RESISTOR		
R3206,3207	J10276129	Carbon composition		1/2W GK 1.2Ω
R3201	J02245229	"	film	1/4W SJ 2.2Ω
R3045,3046	J02245829	"	"	" " 8.2Ω
R3043,3044	J02245120	"	"	" " 12Ω
R3109	J02245270	"	"	" " 27Ω
R3020,3186	J02245330	"	"	" " 33Ω
R3067,3149	J02245560	"	"	" " 56Ω
R3194	J02245820	Carbon film		1/4W SJ 82Ω
R3008	J01245101	"	"	" TJ 100Ω
R3015,3027,3035, 3039,3042,3076, 3085,3087,3118, 3142,3158,3159, 3193	J02245101	"	"	" SJ 100Ω
R3177	J02245121	"	"	" " 120Ω
R3047	J02245151	"	"	" " 150Ω
R3026,3030,3058, 3163,3164,3200	J02245221	"	"	" " 220Ω
R3156,3162	J02245271	"	"	" " 270Ω
R3152,3178	J02245331	"	"	" " 330Ω
R3009,3056,3060	J02245391	"	"	" " 390Ω
R3040,3048,3151, 3175	J02245471	"	"	" " 470Ω
R3057,3061,3198	J02245561	"	"	" " 560Ω
R3041,3116	J02245681	"	"	" " 680Ω
R3001–3003, 3010,3059,3068, 3077,3080,3157, 3168,3173,3176	J02245821	"	"	" " 820Ω
R3019,3021,3036, 3063,3069,3071, 3073,3075,3117, 3122,3165,3169, 3174,3182,3187, 3202	J02245102	"	"	" " 1kΩ
R3079	J02245122	"	"	" " 1.2k
R3006,3115,3140	J02245152	"	"	" " 1.5k
R3083,3111,3112, 3123,3128,3132, 3144,3216,3218, 3227	J02245222	"	"	" " 2.2k
R3018,3110,3133	J02245272	"	"	" " 2.7
R3007,3014,3108, 3127,3185	J02245332	"	"	" " 3.3
R3220	J02245392	"	"	" " 3.9
R3066,3078,3086, 3091,3092,3130, 3131,3166	J02245472	"	"	" " 4.7
R3028,3107,3209	J02245562	"	"	" " 5.6
R3215,3217,3219	J02245682	"	"	" " 6.8
R3070,3114,3146, 3167,3179,3180	J02245822	"	"	" " 8.2
R3017,3021,3023, 3034,3038,3064, 3072,3074,3121, 3135,3137,3161, 3170,3192,3203, 3208,3210–3214, 3223	J02245103	"	"	" " 10
R3225,3226	J01215103	"	"	1/8W TJ 10
R3013,3084,3139, 3160,3191,3195	J02245123	"	"	1/4W SJ 12
R3224	J01215123	"	"	1/8W TJ 12
R3004,3082,3124, 3197,3204	J02245153	"	"	1/4W SJ 15
R3094,3184,3199	J02245183	"	"	" " 18
R3033,3113,3120, 3126,3129,3134, 3136	J02245223	"	"	" " 22
R3012,3037,3051, 3065	J02245273	"	"	" " 27
R3016,3029,3106, 3138	J02245333	"	"	" " 33
R3005,3125	J02245393	"	"	" " 39
R3031,3081,3090, 3150,3171,3188	J02245473	"	"	" " 47

R3095,3183	J02245563	Carbon film	1/4W SJ	56kΩ	C3075,3076,3078, 3081,3082,3084, 3086,3088,3101, 3106- 3108, 3110,3115,3118, 3119,3122	K40179013	Electrolytic 50WV 1μF
R3089	J02245683	"	" "	68kΩ			
R3011,3024,3099	J02245823	"	" "	82kΩ			
R3022,3093,3098, 3196	J02245104	"	" "	100kΩ			
R3181	J02245184	"	" "	180kΩ	C3060	K40179009	" " 2.2μF (50RE2R2)
R3088	J02245224	"	" "	220kΩ			
R3189	J02245274	"	" "	270kΩ	C3062,3072	K40179012	" " 4.7μF (50RE4R7)
R3190	J02245474	"	" "	470kΩ			
R3141,3145	J02245105	"	" "	1MΩ	C3109,3140	K40129004	" 16WV 10μF (16RE10)
R3143	J02245335	"	" "	3.3MΩ			
					C3005, 3011–3013, 3015,3016,3023, 3057,3080,3083, 3085,3116,3117, 3120	K40149008	" 25WV 10μF (25RE10)
		POTENTIOMETER					
VR3001	J51752503	RGS6-FAN	50kΩ				
VR3005	J51752301	RGS6-FAN	300Ω				
VR3003	J51752202	RGS6-FAN	2kΩ		C3047,3063	K40129016	" 16WV 22μF (16RE22)
VR3004	J51724503	PN822H503H	50kΩ				
					C3001,3008,3014, 3059,3065,3074, 3077,3079,3133	K40129008	" " 33μF (16RE33)
		BLOCK RESISTOR					
RB3001	J40900031	EXB-P85-472	4.7KX5		C3006	K40109002	" 10WV 47μF (10RE47)
					C3058	K40129002	" 16WV 47μF (16RE47)
		CAPACITOR					
C3025	K06172040	Ceramic Disc 50WV UJ 4pF (ECCD1H040CU)			C3010,3017,3067, 3105	K40109001	" 10WV 100μF (10RE101)
C3040	K02173100	" " " CH 10pF (DD104CH100D50V02)			C3124,3128	K40129006	" 16WV 470μF (16RE470)
C3029	K02179009	" " " " 22pF (DD104CH220J50V02)			C3123	K40129021	" " 1000μF (16R102S 13x16)
C3126	K00175330	" " " SL 33pF (DD104SL330J50V02)			C3007,3104	K50177102	Mylar 50WV 0.001μF (50F2U102M)
C3093	K00175470	" " " " 47pF (DD104SL470J50V02)			C3002,3003	K50177222	" " 0.0022μF (50F2U222M)
C3027	K02179023	" " " CH 180pF (DD110CH181J50V02)				K50177332	" " 0.0033μF (50F2U332M)
C3030	K06175181	" " " UJ 180pF (ECCD1H181U2)			C3103	K50177682	" " 0.0068μF (50F2U682M)
C3134,3137,3138	K00175221	" " " SL 220pF (DD104SL221J50V02)			C3102,3111- 3114	K50177153	" " 0.015μF (50F2U153M)
C3142	K00175331	" " " " 330pF (DD107SL331J50V02)			C3100	K50177223	" " 0.022μF (50F2U223M)
C3141	K00179054	" " " " 470pF (DD109SL471J50V02)			C3019,3020,3039, 3130	K50177473	" " 0.047μF (50F2U473M)
C3021,3069,3073, 3090,3127,3139,	K12171102	" " " E 0.001μF (DD104E102P50V02)			C3129	K50177104	" " 0.1μF (50F2U104M)
C3018,3022,3028, 3031–3037, 3041–3046, 3048,3050,3051, 3052,3056,3068, 3087,3121	K13179008	" " " F 0.01μF (DD106F103Z50V02)			C3091	K70167225	Tantalum " 2.2μF (CS15E1V2R2M)
					C3136	K70120002	" 16WV 10μF (489D106X0016C1)
C3094- 3099	K13179009	" " " F 0.047μF (DD110F473Z50V02)					
C3089	K19149021	Semiconductor Ceramic 25WV 0.047μF (UAT08X473K-L45AE)					**INDUCTOR**
					L3003	L1190105	FL3H-1R0M 1μH
					L3002	L1190038	FL5H271K 270μH
					L3001	L1190102	S-104K 100mH
C3125	K19149025	" " " 0.1μF (UAT10X104K-L46AE)					
C3038,3131	K40129018	Electrolytic 16WV 0.33μF (AL16WV0.33MFM)					**TRANSFORMER**
					T3001	L0021230	
C3064	K40179010	" 50WV 0.47μF (50RE0R47)			T3002	L0021232	
					T3003	L0190026	R12-7949C
C3004,3049,3061, 3066,3070,3071	K40179013	" " 1μF			T3004	L0020788A	
					T3005	L0020319	

		CONNECTOR
J3001,3002,3004	P0090218	5045-02A
J3003,3005,3006, 3012	P0090219	5045-03A
J3010,3014	P0090220	5045-04A
J3008,3009,3013	P0090221	5045-05A
J3011	P0090222	5045-06A
J3007	P0090224	5045-08A
J3020,3021	P0090183	RT-01T-1.0B
J3015–3019	P1090210	TMPJV
	Q5000049	TP-J
	Q5000050	TP-K
	R0079780A	HEAT SINK

PLL/VCO UNIT

Symbol No.	Part No.	Description
PB-2372A	F0002372A	PLL PC Board
	C023720A	PCB with components
PB-2371A	F0002371A	VCO PC Board
	C023720A	PCB with component
	C023720B	PLL/VCO UNIT Assembly

***** PLL UNIT *****

Symbol No.	Part No.	Description
		IC
Q4006,4022	G1090296	HD10551
Q4011,4014	G1090153	MB8718
Q4016	G1090104	MC14027B
Q4015	G1090108	MC14518B
Q4004	G1090118	NJM78L09A
Q4018–4020	G1090034	SN74LS90N
Q4013,4028,4030	G1090062	SN76514N
Q4010	G1090299	μPC7805H
		TRANSISTOR
Q4012,4017,4021, 4023,4026,4027	G3303800Y	2SC380TM-Y
Q4003,4005,4007	G3305350A	2SC535A
Q4025	G3305350C	2SC535C
Q4008,4031	G3318150G	2SC1815GR
Q4024,4029	G3319230R	2SC1923R
Q4001	G3090005	MPSA13
		FET
Q4002	G3090035	2SK19TMGR
Q4009	G4800730G	3SK73GR
		DIODE
	G2090029	Ge 1N60
D4003	G2090027	Si 1SS53
D4001	G2090161	Varactor 1SV55
		CRYSTAL
X4001	H0102459	HC-18/U 38.0675MHz
		RESISTOR
R4070	J02245100	Carbon film 1/4W SJ 10Ω
R4066	J02245180	Carbon film 1/4W SJ 18Ω
R4054	J02245270	" " " " 27Ω
R4067	J01245330	" " " TJ 33Ω
R4034	J02245390	" " " SJ 39Ω
R4065,4080	J02245560	" " " " 56Ω
R4072	J01245560	" " " TJ 56Ω
R4083	J02245680	" " " SJ 68Ω
R4006,4012,4016, 4020,4023,4027, 4031,4039,4049, 4059,4075,4086, 4088	J02245101	" " " " 100Ω
R4033,4052	J01245101	" " " TJ 100Ω
R4064	J02245121	" " " SJ 120Ω
R4003,4058	J02245151	" " " " 150Ω
R4073,4074,4081, 4082	J02245181	" " " " 180Ω
R4096	J00215221	" " 1/8W VJ 220Ω
R4063	J02245271	" " 1/4W SJ 270Ω
R4013,4017,4021, 4048,4051,4055, 4079,4089,4095	J02245331	" " " " 330Ω
R4050	J02245391	" " " SJ 390Ω
	J02245471	" " " SJ 470Ω
R4022,4024	J02245561	" " " " 560Ω
R4053,4071	J02245821	" " " " 820Ω
R4040,4042,4043, 4046	J02245102	" " " " 1kΩ
R4004,4036,4097	J02245152	" " " " 1.5kΩ
R4077	J02245222	" " " " 2.2kΩ
R4026	J02245332	" " " " 3.3kΩ
R4002	J02245392	" " " " 3.9kΩ
R4038	J02245682	" " " " 6.8kΩ
R4098	J01245822	" " " TJ 8.2kΩ
R4001,4099	J01245103	" " " " 10kΩ
R4005,4007,4008, 4015,4019,4025, 4044,4045,4057, 4069,4087, 4091–4093	J02245103	" " " SJ 10kΩ
R4078,4085,4090	J02245153	" " " " 15kΩ
R4056	J02245183	" " " " 18kΩ
R4009	J02245273	" " " " 27kΩ
R4014,4018,4037	J02245333	" " " " 33kΩ
R4076,4084	J02245393	" " " " 39kΩ
R4060	J02245823	" " " " 82kΩ
R4011, 4028–4030, 4041,4047	J02245104	" " " " 100kΩ
R4032	J02245124	" " " " 120kΩ
		BLOCK RESISTOR
RB4001	J40900032	EXB-P88-104 100Kx8
RB4002	J40900033	EXB-P87-104 100Kx7
		THERMISTOR
TH4001	G9090008	31D26
		CAPACITOR
C4006,4013	K02179003	Ceramic 50WV CK 2pF (DD104CK020C50V)
C4062,4078	K02179004	" " " 3pF (DD104CK030C50V)

C4008,4090	K02172050	Ceramic 50WV CH 5pF (DD104CH050C50V02)	C4043,4046,4127	K50177102	Mylar 50WV 0.001μF (50F2U102M)
C4119	K00173060	" " SL 6pF (DD104SL060D50V02)	C4004	K50177223	" " 0.022μF (50F2U223M)
C4012,4077	K02173080	" " CH 8pF (DD104CH080D50V02)	C4003,	K50177473	" " 0.047μF (50F2U473M)
C4021,4032	K00173080	" " SL 8pF (DD104SL080 50V02)	C4015	K50177104	" " 0.1μF (50F2U104M)
	K02175120	" " CH 12pF (DD104CH120J50V02)	C4038	K40129018	Electrolytic 16WV 0.33μF (AL16WV0.33MFM)
C4091	K02179007	" " " 16pF (DD104CH160J50V02)	C4002,4023,4039, 4040,4045,4055	K40129004	" " 10μF (16RE10)
C4007,4104	K02175180	" " " 18pF (DD104CH180J50V02)	C4053,4075	K40109002	" 10WV 47μF (10RE47)
C4026,4029	K02179008	" " " 20pF (DD104CH200J50V02)	C4057	K40129002	" 16WV 47μF (16RE47)
	K05175220	" " RH 22pF (DD104RH220J50V02)	C4074	K70167684	Tantalum 35WV 0.68μF (CS15E1VR68M)
C4009,4094,4121	K02179009	" " CH 22pF (DD104CH220J50V02)	C4001	K54200001	Polyester film 100WV 1μF (B32561A1105J)
C4118	K00175220	" " SL 22pF (DD104SL220J50V02)			
C4089	K02179011	" " CH 27pF (DD105CH270 50V02)			**TRIMMER CAPACITOR**
			TC4001	K91000055	ECV-1ZW06X53N
	K06179006	" " UJ 30pF (DD104UJ300J50V02)			
C4011,4025,4031, 4092	K02179012	" " CH 30pF (DD105CH300J50V02)			**INDUCTOR**
			L4014	L0020898	0.39μH
C4027,4028	K02175390	" " " 39pF (DD105-257CH390J50V02)	L4017	L0021245	0.420μH
			L4016	L0021246	0.576μH
C4084,4088	K02179015	" " " 43pF (DD106CH430J50V02)	L4015	L0021244	0.677μH
			L4002	L1190004	FL4H-R68M 0.68μH
C4102	K02175470	" " " 47pF (DD106CH470J50V02)	L4003,4022	L1190006	FL4H-1R2M 1.2μH
			L4024	L1190008	FL4H-2R2M 2.2μH
C4087	K02179017	" " " 62pF (DD106CH620J50V02)	L4012,4013	L1190112	FL4H-120K 12μH
			L4005–4007	L1190019	FL5H-150K 15μH
C4086	K02179018	" " " 75pF (DD107CH750J50V02)	L4021	L1190016	FL5H-101K 100μH
			L4010	L1190020	FL5H-151K 150μH
C4061	K00175101	" " SL 100pF (DD105SL101J50V02)	L4009,4019,4020, 4023	L1190038	FL5H-271K 270μH
C4085,4113	K02179020	" " CH 110pF (DD108CH111J50V02)	L4008	L1190017	FL5H102K 1mH
			L4004	L2030068	
C4016,4017	K30276241	Dipped Mica 500WV 240pF (LCQ17241K5)			
					TRANSFORMER
C4083	K02179027	Ceramic 50WV CH 270pF (DD112CH271J50V02)	T4001,4002	L0021233	
C4112,4114	K30276751	Dipped Mica 500WV 750pF (LCQ18751K5)	T4003–4005,4007	L0021234	
			T4006	L0020209	
C4059,4092,4080, 4129-4132	K12171102	Ceramic 50WV E 0.001μF (DD104E102P50V02)			
C4005,4010,4014, 4018–4020, 4024,4030, 4033–4037, 4041,4044, 4048–4052, 4067,4079,4081, 4082,4093, 4095 4101, 4103, 4105–4111, 4115–4117, 4122–4126,4128	K13179008	" " F 0.01μF (DD106F103Z50V02)		L9190016	Shield Case
					CONNECTOR
			J4001,4008,4009	P1090255	TMP-JA
			J4002,4006	P1090210	TMP-JV
			J4003	P0090218	5045-02A
			J4004,4007	P0090183	RT-01T-1.0B
			J4005	P0090219	5045-03A
			J4010	P0090224	5045-08A
C4058,4076	K13170223	Ceramic 50WV 0.022μF (DD109F223Z50V02)	J4011	P0090223	5045-07A
C4054,4056,4060, 4063–4066, 4068,4073	K13179009	" " 0.047μF (DD110F473Z50V02)			

TP4001	P0090183	RT-01T-1.0B
TP4002	Q5000050	TP-K
TP4003	Q9000192	30F-T0-220

******* VCO UNIT *******

Symbol No.	Part No.	Description
		IC
Q5001	G1090118	NJM78L09A
Q5025	G1090395	SN74LS145N
		FET
Q5003,5004,5007, 5008,5011,5012, 5015,5016,5019, 5020	G3090036	2SK19TM-BL
Q5022,5023	G4800730G	3SK73GR
		TRANSISTOR
Q5002,5005,5006, 5009,5010,5013, 5014,5017,5018, 5021	G3107331P	2SA733AP
Q5024	G3318150G	2SC1815GR
		DIODE
D5002,5003,5006, 5007,5010,5011, 5014,5015,5018, 5019	G2090027	Si 1SS53
D5001,5004,5005, 5008,5009,5012, 5013,5016,5017, 5020	G2090161	Varactor 1SV55
		RESISTOR
R5006,5054,5076, 5082,5088	J02245101	Carbon film 1/4W SJ 100Ω
R5012,5023,5026, 5034,5040,5048, 5062,5068,5075	J01245101	" " " TJ 100Ω
R5089	J02245151	" " " SJ 150Ω
R5081	J01245181	" " " TJ 180Ω
R5090,5091	J01215221	" " 1/8W TJ 220Ω
R5087	J02245221	" " 1/4W SJ 220Ω
R5074	J02245681	" " " " 680Ω
R5005,5015,5019, 5029,5033,5043, 5047,5057,5061, 5071	J02245102	" " " " 1kΩ
R5002	J02245472	" " " " 4.7kΩ
R5001,5003,5004, 5010,5011,5017, 5018,5024,5025	J02245103	" " " " 10kΩ
R5031,5032,5038, 5039,5045,5046, 5052,5053,5059, 5060,5066,5067, 5073	J02245103	Carbon film 1/4W SJ 10kΩ
R5072	J02245223	" " " " 22kΩ
R5007,5016,5020, 5030,5035,5044, 5049,5058,5063	J02245563	" " " " 56kΩ
R5077,5078,5080, 5084	J02245104	" " " " 100kΩ
R5008,5009,5013, 5014,5021,5022, 5027,5028,5036, 5037,5041,5042, 5050,5051,5055, 5056,5064,5065, 5069,5070,5085	J02245154	" " " " 150kΩ
R5083	J02245184	" " " " 180kΩ
R5086	J02245334	" " " " 330kΩ
R5079	J02245474	" " " " 470kΩ
		BLOCK RESISTOR
RB5001	J40900034	EXB-P810-472 4.7Kx10
		THERMISTOR
TH5001	G9090002	D22A
		CAPACITOR
C5092	K02172050	Ceramic 50WV CH 5pF (DD104CH050C50V02)
C5047,5063,5072, 5073	K06173080	" " UJ 8pF (DD104UJ080D50V02)
C5014,5015,5024, 5025,5031,5041, 5057	K06173100	" " " 10pF (DD104UJ100D50V02)
C5023,5030,5040, 5046,5056,5062, 5079	K06175120	" " " 12pF (DD104UJ120J50V02)
C5016,5078	K06175150	" " " 15pF (DD104UJ150J50V02)
C5006,5008,5032, 5039,5048	K06175180	" " " 18pF (DD104UJ180J50V02)
C5007,5055	K05175220	" " RH 22pF (DD104RH220J50V02)
C5009,5071,5081	K06175220	" " UJ 22pF (DD104UJ220J50V02)
C5099	K02179009	" " CH 22pF (DD104CH220J50V02)
C5054,5064,5070	K06175270	" " UJ 27pF (DD104UJ270J50V02)
C5093	K02175270	" " CH 27pF (DD105CH270J50V02)
C5080	K05175330	" " RH 33pF (DD105RH330J50V02)
C5017,5022,5033, 5038,5049,5065	K06175330	" " UJ 33pF (DD104UJ330J50V02)
C5106	K02179015	" " CH 43pF (DD106CH430J50V02)
C5102,5104,5107	K02175470	" " 47pF (DD106CH470J50V02)
C5100	K02175560	" " 56pF (DD106CH560J50V02)

C5105	K02179017	Ceramic 50WV CH 62pF (DD106CH620J50V02)
C5086,5088,5103	K02175820	" " " 82pF (DD107CH820J50V02)
C5098	K30176121	Dipped Mica " 120pF (Z12C121K05)
C5101	K30176181	" " " 180pF (Z17D181K05)
C5018,5021,5034, 5037,5050,5053, 5066,5069,5082, 5089, 5108–5113	K12171102	Ceramic " E 0.001μF (DD104E102P50V02)
C5003,5005,5010, 5013,5019,5020, 5026,5029,5035, 5036,5042,5045, 5051,5052,5058, 5061,5067,5068, 5074,5077,5083, 5085,5087,5091, 5094,5095,5097	K13179008	" " F 0.01μF (DD106F103Z50V02)
C5004	K13179009	" " F 0.047μF (DD110F473Z50V02)
C5084	K50177222	Mylar " 0.0022μF (50F2U222M)
C5002	K50177104	" " 0.1μF (50F2U104M)
C5011,5012,5027, 5028,5043,5044, 5059,5060,5075, 5076	K40129008	Electrolytic 16WV 33μF (16RE33)
C5090,5096	K40129004	" " 10μF (16RE10)
C5001	K40129018	" " 0.33μF (AL16WV0.33MFM)
		TRANSFORMER
T5001–5003	L0021235	
T5004	L0021236	
T5005–5007	L0021237	
T5008–5010	L0021238	
		INDUCTOR
L5007	L0021243	0.103μH
L5004,5005	L0021240	0.136μH
L5010	L0021239	0.178μH
L5009	L0021242	0.276μH
L5008	L0021241	0.622μH
L5002,5003	L1190005	FL4H1R0M 1μH
L5001	L1190038	FL5H271K 270μH
		RECEPTACLE
J5001	P0090220	5045-04A
J5002	P1090255	TMP-JA
J5003	P0090183	RT-01T-1.0B
TP5001	Q5000050	TP-K
		JUMPER
	Q9000043	0.6-5.0
	Q9000049	0.6-7.5
	Q9000002	0.6-10.0
	Q9000042	0.6-12.5

CPU UNIT

Symbol No.	Part No.	Description
	C023730A	PCB with Components
		★★★ CPU BOARD ★★★
PB-2373	F0002373	Printed Circuit Board
	C023730A	PCB with components (with Connector Unit A, B)
		IC
Q6009	G1090124	MC14016B
Q6003	G1090290	MC14093B
Q6028,6029	G1090312	MC14504B
Q6005	G1090397	MSM80C85ARS
Q6040	G1090092	SN74LS00N
Q6008, 6013–6015,6038	G1090180	SN74LS02N
Q6004	G1090418	SN74LS14N
Q6012	G1090401	SN74LS42N
Q6010	G1090196	SN74LS74N
Q6006	G1090398	SN74LS75N
Q6033	G1090100	SN74LS123N
Q6025	G1090395	SN74LS145N
Q6007	G1090399	SN74LS190N
Q6019,6020	G1090404	SN74LS365N
Q6011,6021–6023	G1090400	SN74LS373N
Q6032	G1090084	μPC78L05
Q6017,6018	G1090403	μPD445LC-1
Q6016	G1090518	μPD2364C-010
Q6026,6027	G1090406	μPD8255AC-5
Q6024	G1090405	μPD8279C-5
Q6034		TBP18SA030N- ROM
		TRANSISTOR
Q6002,6030	G3107331	2SA733AP
Q6001	G3318150	2SC1815Y
		IC SOCKET
	P3090062	C841602 16P
	P3090065	C842402 24P
	P3090067	C844002 40P
		DIODE
D6002,6006–6012	G2015550	Si 1S1555
D6001	G2090001	" 10D1
D6003	G2090008	Zener WZ071
D6004,6005	G2090244	Schottky 1SS106
		CRYSTAL
X6001	H0102460	HC-18/U 6MHz

T

		RESISTOR			
R6034	J20306059	Metallic film	1W		0.5Ω
R6036	J00275470	Carbon film	1/2W		47Ω
R6045	J01245101	" "	1/4W	TJ	100Ω
R6038–6044	J01215221	" "	1/8W		220Ω
R6001,6003,6004	J02245331	" "	1/4W	SJ	330Ω
R6029	J02245561	" "	"	"	560Ω
R6021,6033,6035	J02245102	" "	"	"	1kΩ
R6022	J02245222	" "	"	"	2.2kΩ
R6015–6017	J02245332	" "	"	"	3.3kΩ
R6023	J02245392	" "	"	"	3.9kΩ
R6005,6018–6020	J02245472	" "	"	"	4.7kΩ
R6024	J02245822	" "	"	"	8.2kΩ
R6006,6007,6009, 6011,6013,6014, 6030–6032	J02245103	" "	"	"	10kΩ
R6025	J02245153	" "	"	"	15kΩ
R6026	J02245333	" "	"	"	33kΩ
R6027	J02245683	" "	"	"	68kΩ
R6037	J02245104	" "	"	"	100kΩ
R6028	J02245124	" "	"	"	120kΩ
R6010,6012	J02245474	" "	"	"	470kΩ
		BLOCK RESISTOR			
RB6005	J40900036	EXB-P85-103	10Kx5		
RB6001–6004	J40900035	EXB-P88-103	10Kx8		
		CAPACITOR			
C6003,6004	K02175101	Ceramic	50WV	CH	100pF
		(DD107CH101J50V02)			
C6001, 6005-6015, 6032,6042,6044, 6063,6077,6078, 6094,6095,6098, 6107,6108,6116, 6117,6179,6180	K14180103	"	63WV		0.01μF
		(RD871-1FZ103Z)			
C6118	K13179009	"	50WV		0.047μF
		(DD110F473Z50V)			
C6091,6093	K50177104	Mylar	"		0.1μF
		(50F2U10411)			
C6097	K40109014	Electrolytic	10WV		2200μF
		(10RC2200)			
C6115	K40179009	"	50WV		2.2μF
		(50RE2R2)			
C6092	K40149008	"	25WV		10μF
		(25RE10)			
C6043	K40129004	"	16WV		10μF
		(16RE10)			
C6002,6041,6109, 6114	K70120002	Tantalum	"		10μF
		(489D106X0016C1)			
		CONNECTOR			
J6001,6004,6002, 6012,6014,6016	P0090292	IMSA-1068-04I-19L			
J6003,6008,6010, 6021	P0090296	IMSA-1068-04I-19L			
J6005	P0090297	IMSA-1068-04I-19L			
J6011	P0090293	IMSA-1068-05I-19L			
J6013	P0090301	IMSA-13I-19L			
J6015	P0090295	IMSA-1068-07I-19L			
J6016	P0090292	IMSA-1068-04I-19L			
J6017	P0090293	IMSA-1068-05I-19L			
J6020,6022	P0090290	IMSA-1068-02I-19L			
(P6001)					

		INDUCTOR	
L6001	L2030067B		
L6002–6006	L1190133	LAL04NA101K	
L6007	L1190020	FL5H-151K	150μH
	T9204534		
	T9204535		
	T9204536		
	R0080050C	Shield Case (CPU)	
	R0080250	" " Cover	
	R0080030A	" " "	
	★★★ CONNECTOR UNIT A ★★★		
PB-2467	F0002467	Printed Circuit Board	
	C024670		
		CAPACITOR	
C4602–4681, 4683–4687	K12171222	Ceramic 50WV E (DD105E222P50V)	0.0022μF
C4601,4682	K14180103	" " FZ (RD871-1FZ103Z)	0.01μF
		CONNECTOR	
J4605,4607,4612	P0090328	IMSA-1068-04L-27.4ℓ	4P
J4608	P0090329	IMSA-1068-05L-27.4ℓ	5P
J4601,4603	P0090330	IMSA-1068-06L-27.5ℓ	6P
J4613	P0090318	IMSA-1068-06L	6P
J4611	P0090331	IMSA-1068-07L-27.5ℓ	7P
J4602,4606,4609	P0090332	IMSA-1068-08L-27.5ℓ	8P
J4604	P0090333	IMSA-1068-09L-27.5ℓ	9P
J4610	P0090337	IMSA-1068-13L-27.5ℓ	13P
	★★★ CONNECTOR UNIT B ★★★		
PB-2468	F0002468	Printed Circuit Board	
	C024680		
		CAPACITOR	
C4701,4702, 4712–4740	K12171222	Ceramic 50WV E (DD105E222P50V)	0.0022μF
C4703–4709, 4711	K14180103	" " FZ (RD871-1FZ103Z)	0.01μF
		INDUCTOR	
L4701–4703	L1020672		
		CONNECTOR	
J4706	P0090338	IMSA-1068-02L-34.6ℓ	2P
J4712	P0090302	IMSA-1068-02I-26ℓ	2P
J4704,4708	P0090314	IMSA-1068-02L	2P
J4701,4702	P0090315	IMSA-1068-03L	3P
J4703	P0090316	IMSA-1068-04L	4P
J4704	P0090340	IMSA-1068-04L-34.6ℓ	4P
J4711	P0090304	IMSA-1068-04I-26ℓ	4P
J4710	P0090341	IMSA-1068-05L-34.6ℓ	5P
J4705	P0090318	IMSA-1068-06L	6P
J4707	P0090345	IMSA-1068-09L-34.6ℓ	9P

REAR PANEL UNIT

MEMORY CHECK DECODER UNIT

Symbol No.	Part No.	Description
PB-2465	F0002465	Printed Circuit Board
	C024650A	PCB with Components
		IC
Q3801,3802	G1090506	SN74LS05N
Q3803	G1090196	SN74LS74N
Q3805	G1090403	μPD445LC-1
		TRANSISTOR
Q3804	G3318150Y	2SC1815Y
		DIODE
D3801–3803	G2090118	Schottky barrier 1SS97
		RESISTOR
R3806	J01245101	Carbon film 1/4W TJ 100Ω
R3801,3802,3805	J01245332	" " " " 3.3kΩ
R3803,3804	J01245103	" " " " 10kΩ
		CAPACITOR
C3801	K13179008	Ceramic 50WV 0.01μF (DD106F103Z50V02)
		CONNECTOR
J3801	P0090183	RT-01T-0.1B
J3802	P0090356	5234-04A
J3803,3804	P0090099	3022-10A

VFO UNIT

Symbol No.	Part No.	Description
PB-2374A	F0002374A	Printed Circuit Board
	C023740A	PCB with Components
		IC
Q7009,7025	G1090296	HD10551P
Q7013	G1090034	SN74LS90N
Q7005,7010,7014, 7017	G1090062	SN76514N
Q7001,7020	G1090048	TC5081AP
Q7007,7019	G1090247	TC9122P
Q7028	G1090299	μPC7805H
Q7027	G1090294	μPC7808H
		TRANSISTOR
Q7036	G3107331P	2SA733AP
Q7003,7004,7006, 7008,7015,7018, 7024, 7031–7033,7035	G3305350A	2SC535A
Q7011,7012,7021, 7029,7030,7034	G3318150Y	2SC1815Y
Q7026	G3408800Y	2SD880Y
Q7002,7022	G3090005	MPS-A13
		FET
Q7016,7023	G3090035	2SK19TM-GR
		DIODE
D7001	G2022090	Varactor 1S2209
D7002	G2090161	" 1SV55
D7003	G2090011	Zener WZ100
		CRYSTAL
X7001	H0102457	HC-18/U 30MHz
		THERMISTOR
TH7001	G9090008	31D26
		POSISTOR
TH7002	G9090019	PTH507A01BG330N020
		RESISTOR
R7055	J02245560	Carbon film 1/4W SJ 56Ω
R7005,7007,7010, 7013,7015,7020, 7021,7025,7029, 7034,7038,7039, 7042,7045,7047, 7060,7062,7064, 7069,7075,7077, 7080,7081,7083, 7084,7088,7090, 7091,7096	J02245101	" " " " 100Ω
R7003	J02245151	" " " " 150Ω
R7012,7017,7023, 7024,7037,7041, 7049,7063,7066, 7068,7072,7087	J02245331	" " " " 330Ω
R7014,7026,7043, 7052,7067,7093, 7094,7099,7100	J02245561	" " " " 560Ω
R7050	J02245821	" " " " 820Ω
R7001,7004,7016, 7027,7030,7048, 7054,7058,7076	J02245102	" " " " 1kΩ
R7033	J02245222	" " " " 2.2kΩ
R7095	J02245332	" " " " 3.3kΩ
R7058	J02245472	" " " " 4.7kΩ
R7002,7009,7019, 7032,7036,7046, 7051,7057,7071, 7074,7079,7086, 7092,7098	J02245103	" " " " 10kΩ
R7008,7018,7035, 7044,7070,7073	J02245333	" " " " 33kΩ
R7097	J02245473	" " " " 47kΩ
R7078,7085	J02245563	" " " " 56kΩ
R7006,7011,7022, 7028,7031,7040, 7059,7061,7065, 7082,7089	J02245104	" " " " 100kΩ

		CAPACITOR				
C7030,7031,7061, 7098,7100	K02179003	Ceramic 50WV CH 2pF (DD104CH020C50V)		K21170002	Ceramic Feed Thru 50WV 0.001μF (ECK-Y1H-102WF)
C7045,7053	K02172050	" " " 5pF (DD104CH050C50V)	C7001,7027,7082, 7084,7086,7093, 7105,7108,7143	K40129004	Electrolytic 16WV 10μF (16RE10)
C7114	K00172050	" " SL 5pF (DD104SL050C50V)	C7145,7146	K40129016	" " 22μF (16RE22)
C7005,7008,7095	K02173060	" " CH 6pF (DD104CH060D50V)	C7102	K40129033	" " 220μF (16RC221)
C7007	K06173090	" " UJ 9pF (DD104UJ090D50V)	C7103,7104	K50177473	Mylar 50WV 0.047μF (50F2U473M)
C7111	K00173100	" " SL 10pF (DD104SL100D50V)	C7003	K54200003	Polyester film 100WV 0.1μF (B32560-A1104)
C7006,7062,7067, 7124	K02173100	" " CH 10pF (DD104CH100D50V)	C7087	K54200001	" " " 1μF (B32561-A1105)
C7023,7025,7074, 7076	K02175150	" " " 15pF (DD104CH150J50V)			
C7036,7039	K02179008	" " " 20pF (DD104CH200J50V)			TRIMMER CAPACITOR
C7052	K06175220	" " UJ 22pF (DD104UJ220J50V)	TC7001	K91000012	ECV-1ZW10X32 10pF
C7091	K02179009	" " CH 22pF (DD104CH220J50V)			
C7024,7075	K02179012	" " " 30pF (DD105CH300J50V)	L7010	L1190004	INDUCTOR FL4H-R68M 0.68μH
C7010,7096, 7110,7121,7130	K02175330	" " " 33pF (DD105CH330J50V)	L7016,7017	L1190007	FL4H-1R8M 1.8μH
	K00175330	" " SL 33pF (DD104SL330J50V)	L7008,7009	L1190070	FL4H-8R2M 8.2μH
C7037,7038	K02175390	" " CH 39pF (DD105-257CH390J50V)	L7003	L1190014	FL4H-100K 10μH
C7133,7136,7137	K02175470	" " CH 47pF (DD106CH470J50V)	L7001,7002	L1190112	FL4H-120K 12μH
C7090	K02175680	" " " 68pF (DD107CH680J50V)	L7004–7006	L1190117	S-4 15μH
C7021,7081,7134, 7135	K00175101	" " SL 100pF (DD105SL101J50V)	L7013–7015	L1190023	FL5H-220K 22μH
C7113	K02175101	" " CH 100pF (DD107CH101J50V)	L7007	L1190020	FL5H-151K 150μH
C7112	K02175121	" " " 120pF (DD109CH121J50V)	L7011	L1190038	FL5H-271K 270μH
C7140,7142	K10176471	" " B 470pF (DD104B471K50V)	L7012	L2030068	
C7141,7150–7157	K12171102	" " E 0.001μF (DD104E102P50V)			
C7002,7004,7009, 7011–7017, 7019,7020,7022, 7026,7028,7029, 7032–7034, 7040–7044, 7046–7051, 7054–7060, 7063–7066, 7068–7073, 7078–7080, 7083,7085,7089, 7094,7097,7099, 7101,7106,7107, 7109, 7115–7117, 7119,7120,7122, 7123, 7125–7129, 7131,7138,7139, 7144,7148,7149,	K13179008	" " F 0.01μF (DD106F103Z50V)			TRANSFORMER
			T7001	L0021080	
			T7002	L0020801	
			T7003	L0020806	
			T7004,7005	L0020802	
			T7006	L0020807	
			T7007–7009,7013	L0020805	
			T7010	L0021081	
			T7011	L0020804	
			T7012	L0020803	
					CONNECTOR
			J7003,7008	P0090218	5045-02A
			J7002	P0090224	5045-08A
			J7001	P0090229	5045-13A
			J7004–7006	P1090225	TMP-JA
			J7007	P0090183	RT-01T-1.0B
				Q5000050	TP-K
C7147	K13179009	" " " 0.047μF (DD110F473Z50V)			
C7158–7176	K23170020	Ceramic Chip 50WV " 0.001μF (GR40W5R102M)			

LPF UNIT

Symbol No.	Part No.	Description
PB-2387A	F0002387A	Printed Circuit Board
	C023870A	PCB with Components

		DIODE
D9009–9016	G2015550	Si 1S1555
D9001–9008	G2090118	Schottky 1SS97
		RESISTOR
R9001	J01245470	Carbon film 1/4W TJ 47Ω
R9002	J02245471	" " " SJ 470Ω
		CAPACITOR
C9094,9095	K02175680	Ceramic 50WV CH 68pF (DD107CH680J50V02)
C9093	K02179021	" " " 130pF (DD109CH131J50V02)
C9021,9036,9042, 9048	K30275100	Dipped Mica 500WV 10pF (LCQ11100J5)
C9037,9043	K30275120	" " " 12pF (LCQ11120J5)
C9034	K30275150	" " " 15pF (LCQ12150J5)
C9030	K30275180	" " " 18pF (LCQ11180J5)
C9006,9033	K30275200	" " " 20pF (LCQ12200J5)
C9025	K30275270	" " " 27pF (LCQ12270J5)
C9017,9040	K30275330	" " " 33pF (LCQ12330J5)
C9019	K30275360	" " " 36pF (LCQ12360J5)
C9010	K30275390	" " " 39pF (LCQ12390J5)
C9028	K30275510	" " " 51pF (LCQ12510J5)
C9039	K30275680	" " " 68pF (LCQ18680J5)
C9016,9023,9044	K30275750	" " " 75pF (LCQ12750J5)
C9013	K30275820	" " " 82pF (LCQ12820J5)
C9032,9092	K30275101	" " " 100pF (LCQ12101J5)
C9038	K30275111	" " " 110pF (LCQ17111J5)
C9004,9005,9027, 9041	K30275151	" " " 150pF (LCQ17151J5)
C9031	K30275181	" " " 180pF (LCQ17181J5)
C9022,9035	K30275221	" " " 220pF (LCQ17221J5)
C9011	K30275241	" " " 240pF (LCQ17241J5)
C9026	K30275271	" " " 270pF (LCQ17271J5)
C9008,9015,9029	K30275331	" " " 330pF (LCQ17331J5)
C9020	K30275361	" " " 360pF (LCQ17361J5)
C9045	K30275431	" " " 430pF (LCQ17431J5)
C9002,9024	K30275471	" " " 470pF (LCQ17471J5)
C9009	K30275511	" " " 510pF (LCQ18511J5)
C9014,9018	K30275681	Dipped Mica 500WV 680pF (LCQ18681J5)
C9007	K30279093	" " " 1000pF (DM19D102J5)
C9001,9012	K30279095	" " " 1200pF (DM19D122J5)
C9003	K30279098	" " " 2200pF (DM19D222J5)
C9047,9049,9051, 9056–9058	K13179008	Ceramic 50WV F 0.01μF (DD106F103Z50V)
C9050, 9052–9055, 9059–9081, 9088,9089	K13179009	" " F 0.047μF (DD110F473Z50V)
C9046	K19149021	Semiconductor Ceramic 0.047μF (UAT08X473KL45AE)
C9082–9087, 9090,9091	K19149025	" " 0.1μF (UAT13X104KL46AE)
		TRIMMER CAPACITOR
TC9001	K91000019	ECV1ZW10x40
		INDUCTOR
L9001	L0020613	
L9002	L0020614	
L9003	L0020615	
L9004	L0020616	
L9005	L0020617	
L9006	L0020618	
L9007	L0021228	
L9008	L0021229	
L9009	L0020854	
L9010	L0020855	
L9011	L0020621	
L9012	L0020622	
L9013	L0020623	
L9014	L0020624	
L9015	L0020301A	
L9016	L1190010	FL4H-3R9K 3.9μH
L9017–9021	L1190017	FL5H-102K 1mH
L9022,9024	L0021220	
L9023	L1190140	LAL04SK102K 1mH
		RELAY
RL9001–9014	M1190010	G2K-3 12V
RL9015	M1190005	NR-HD-12V (AE5343)
		CONNECTOR
J9003–9005	P1090016	SQ-3056
J9001	T9204444	SMP-07V-B
J9002	T9204445	SMP-04V-B
J9006	T9204446	SMP-05V-B
		TP TERMINAL
	Q5000037	TP-H

	Q5000011	Wrapping terminal C
	R0079790	Shield Case
	R0079800	" " Cover
	R0079810	" Plate

DIAL UNIT

Symbol No.	Part No.	Description
PB-2386A	F0002386A	Printed Circuit Board
	C023860A	PCB with Components
		IC
Q1303	G1090027	MC14001B
Q1305	G1090068	MC14011B
Q1302	G1090176	MC14012B
Q1306	G1090067	MC14013B
Q1308	G1090124	MC14016B
Q1301	G1090290	MC14093B
Q1304	G1090224	MC14584B
Q1307	G1090092	SN74LS00N
		DIODE
D1301–1310	G2015550	Si 1S1555
		RESISTOR
R1304	J02245471	Carbon film 1/4W SJ 470Ω
R1305	J02245222	" " " " 2.2kΩ
R1312	J02245472	" " " " 4.7kΩ
R1303,1306,1308,	J02245103	" " " " 10kΩ
R1314	J02245153	" " " " 15kΩ
R1301,1302	J01245104	" " " TJ 100kΩ
R1309–1311	J02245104	" " " SJ 100kΩ
R1313	J02245225	" " " 2.2MΩ
		BLOCK RESISTOR
RB1301	J40900037	EXB-P84-563 56Kx4
		CAPACITOR
C1301–1305,1307	K50177102	Mylar 50WV 0.001μF (50F2U102M)
C1309	K50177103	" " 0.01μF (50F2U103M)
C1308	K40149008	Electrolytic 25WV 10μF (25RE10)
C1307	K50177682	" " 0.0068μF (50F2U682M)
		CONNECTOR
J1302	P0090219	5045-03A
J1301	P0090220	5045-04A
J1303	P0090222	5045-06A

DISPLAY UNIT (A)

Symbol No.	Part No.	Description
PB-2364B	F0002364B	Printed Circuit Board
	C023640A	PCB with Components
		FCD
V1401	G6090028	FIP-9E8A
V1402	G6090029	FIP-9P5
		LED
D1401–1406	G2090134	TLY205
		RESISTOR
R1407	J01245339	Carbon film 1/4WV TJ 3.3Ω
R1408	J01245100	" " " " 10Ω
	J01245680	" " " " 68Ω
R1401–1406	J01245331	" " " " 330Ω
		CONNECTOR
J1401,1402,1404	P0090092	3022-08A 8pF
J1403	P0090090	3022-09A 9pF

DISPLAY UNIT (B)

Symbol No.	Part No.	Description
PB-2368A	F0002368A	Printed Circuit Board
	C023680A	PCB with Components
		IC
Q1606	G1090409	MC14514B
Q1602–1604	G1090260	MSL912RS
Q1607	G1090084	NJM78L05A
Q1605	G1090004	SN7445N
Q1601	G1090408	TC5067BP
		TRANSISTOR
Q1609	G3318150G	2SC1815GR
Q1608	G3320020L	2SC2002L
		DIODE
D1601–1604, 1613–1624,1633	G2015540	Si 1S1554
D1634	G2090033	Ge 1N270
		RESISTOR
R1614	J02245270	Carbon film 1/4W SJ 27Ω
R1621	J02245472	" " " " 4.7kΩ
R1613	J02245562	" " " " 5.6kΩ
R1617	J02245103	" " " " 10kΩ
R1607,1608	J02245333	" " " " 33kΩ
R1608	J02245683	" " " " 68kΩ
R1601–1606, 1609–1612, 1615,1616	J02245104	" " " " 100kΩ

R1618	J02245154	Carbon film 1/4W SJ 150kΩ
		BLOCK RESISTOR
RB1601,1602	J40900040	EXB-P86-104 100kΩx6
		CAPACITOR
C1611	K12171102	Ceramic 50WV 0.001μF (DD104E102P50V02)
C1601,1602,1608, 1612,1613	K13179008	Ceramic 50WV 0.01μF (DD106F103Z50V02)
C1607	K50177103	Mylar " 0.01μF (50F2U103M)
C1604	K70120003	Tantalum 16WV 47μF (489D476X0016F1)
C1610	K40129016	Electrolytic " 22μF (16RE22)
C1609	K40179021	" 50WV 33μF (50RE33)
C1605,1606	K40129018	" 16WV 0.33μF (AL16WV0.33μFM)
		INDUCTOR
L1601	L2030068	
		DC-DC TRANSFORMER
PT1601	L3030077	MPS-160
		CONNECTOR
J1601,1602,1604	P1090250	3024-08CH
J1603	P1090251	3024-09CH
J1610	P0090218	5045-02A
J1606,1609	P0090220	5045-04A
J1607,1608	P0090221	5045-05A
J1605	P0090224	5045-08A

DISPLAY UNIT (C)

Symbol No.	Part No.	Description
PB-2466	F0002466	Printed Circuit Board
	C024660A	PCB with Components
		IC
Q3703	G3107331P	2SA733AP
Q3701	G1090398	SN74LS75N
Q3702	G1090395	SN74LS145N
		DIODE
D3701-3716	G2015540	Si 1S1554
		RESISTOR
	J01245472	Carbon film 1/4W TJ 4.7kΩ
R3701	J01245103	" " " " 10kΩ

		CAPACITOR
C3701-3703	K13179008	Ceramic 50WV 0.01μF (DD106F103Z50V02)
		CONNECTOR
J3701,3707	P0090183	RT-01T-0.1B
J3702	P1090303	3024-04CH
J3703	P0090220	5045-04A
J3704,3705	P0090221	5045-05A
J3706	P1090304	3024-05CH

KEY MATRIX UNIT

Symbol No.	Part No.	Description
PB-2376A	F0002376A	Printed Circuit Board
	C023760A	PCB with Components
		DIODE
D1707-1727	G2090027	Si 1SS53
D1701-1706	G2090134	LED TLY205
		BUZZER
BZ1701	M4290001	EFB-RE25D02
		RESISTOR
R1701-1704	J01245331	Carbon film 1/4W TJ 330Ω
R1705,1706	J01245561	" " " " 560Ω
R1707	J01245182	" " " " 1.8kΩ
		KEY SWITCH
S1701-1723	N4090065	KHC10902

FSK UNIT

Symbol No.	Part No.	Description
PB-2388B	F0002388B	Printed Circuit Board
	C023880A	PCB with Components
		IC
Q1803	G1090104	MC14027B
Q1801	G1090092	SN74LS00N
Q1804	G1090093	SN74LS04N
Q1805	G1090410	SN74LS09N
Q1802	G1090247	TC9122P
Q1806	G1090084	μPC78L05
		TRANSISTOR
Q1807-1814	G3318150G	2SC1815GR
		DIODE
D1802, 1826-1832,1835	G2090093	Ge 1N270

D1803–1825,1834, 1836–1841	G2090027	Si	1SS53
D1833	G2090185	Zener	HZ5C-2
D1801	G2090201	"	RD3.3EB-3
		CRYSTAL	
X1801	H0102458	HC-18/U	6.8MHz
		RESISTOR	
R1803,1805,1820, 1821	J02245221	Carbon film	1/4W SJ 220Ω
R1823	J02245331	" " " "	330Ω
R1804,1824	J02245561	" " " "	560Ω
	J01245102	" " " TJ	1kΩ
R1801,1807,1811, 1817,1818	J02245102	" " " SJ	1kΩ
R1822	J02245152	" " " "	1.5kΩ
R1806	J02245182	" " " "	1.8kΩ
R1815,1816,1829	J02245222	" " " "	2.2kΩ
R1828	J02245472	" " " "	4.7kΩ
R1831	J02245562	" " " "	5.6kΩ
	J02245682	" " " SJ	6.8kΩ
R1833	J02245822	" " " "	8.2kΩ
R1810,1812,1825, 1830,1832	J02245103	" " " "	10kΩ
	J01245103	" " " TJ	10kΩ
R1808,1809	J02245153	" " " SJ	15kΩ
R1826	J02245223	" " " "	22kΩ
R1813,1814	J02245333	" " " "	33kΩ
		POTENTIOMETER	
VR1801	J51745102	H0651A007-1KB	1kΩB
		CAPACITOR	
C1802,1806	K02175330	Ceramic 50WV CH (DD105CH330J50V)	33pF
C1808	K12171102	" " (DD104E102P50V)	0.001μF
C1801,1804	K13179009	" " (DD110F473Z50V)	0.047μF
C1811	K19149013	" 25WV (UAT05X103K-L05AE)	0.01μF
C1810	K19149023	" " (UAT10X683K-L45AE)	0.068μF
C1807	K40109011	Electrolytic 10WV (10RE33)	33μF
C1803	K40109002	" "	47μF

REG UNIT

Symbol No.	Part No.	Description
PB-2366B	F0002366B	Printed Circuit Board
	C023660A	PCB with Components
		IC
Q1901	G1090037	MC14572UB
		TRANSISTOR
Q1917,1918	G3104960Y	2SA496Y
Q1904,1905,1913, 1919,1920	G3107331Q	2SA733AQ
Q1903,1914,1915	G3109500Y	2SA950Y
Q1906–1908	G3309451Q	2SC945AQ
Q1902	G3318150G	2SC1815GR
Q1910–1912	G3318150Y	2SC1815Y
Q1909	G3320020L	2SC2002L
		DIODE
D1914,1916,1919, 1920	G2090093	Ge 1N270
D1907	G2015880	Si 1S1588
D1901–1904, 1910,1918,1921	G2090027	" 1SS53
D1911	G2090217	Zener HZ3C-1
D1915	G2090238	" HZ3C-3
D1906	G2090139	" WZ051
D1908	G2090182	" HZ7A-2
D1909	G2090251	" HZ11C-1
		RESISTOR
R1921	J20336050	Metallic film 2W 5Ω
R1922	J02245181	Carbon film 1/4W SJ 180Ω
R1911,1920	J02245331	" " " " 330Ω
R1912	J02245471	" " " " 470Ω
R1913	J02245561	" " " " 560Ω
R1901	J02245681	" " " " 680Ω
R1916,1924,1947	J02245102	" " " " 1kΩ
R1917,1941	J02245122	" " " " 1.2kΩ
R1940	J02245182	" " " " 1.8kΩ
R1928,1930	J02245222	" " " " 2.2kΩ
R1915	J02245272	" " " " 2.7kΩ
R1914,1935	J02245332	" " " " 3.3kΩ
R1936	J02245472	" " " " 4.7kΩ
R1910,1943–1948	J02245562	" " " " 5.6kΩ

		CAPACITOR					DIODE	
C1914,1915	K12171102	Ceramic (DD104E102P50V)	50WV	0.001μF	D2301	G2090027	Si	1SS53
C1908	K50177103	Mylar (50F2U103M)	50WV	0.01μF				
C1913	K50177153	〃 (50F2U153M)	〃	0.015μF			SWITCH	
C1901	K50177273	〃 (50F2U273M)	〃	0.027μF	S2301	N4090060	SUT02A/E36674920	
C1905,1906	K50177333	〃 (50F2U333M)	〃	0.033μF				
C1912	K50177104	〃 (50F2U104M)	〃	0.1μF			RESISTOR	
C1909	K70120003	Tantalum (489D476X0016F1)	16WV	47μF	R2302	J02245222	Carbon film	1/4WV SJ 2.2kΩ
C1911	K40149008	Electrolytic (25RE10)	25WV	10μF	R2303,2304	J02245103	〃 〃	〃 〃 10kΩ
C1902	K40129008	〃 (16RE33)	16WV	33μF				
C1910	K40129002	〃 (16RE47)	〃	47μF				
C1904,1907	K40149003	〃 (25RE100)	25WV	100μF				
		POTENTIOMETER						
VR1901	J51752501	RGS6-FAN	500Ω					
VR1902	J51752502	RGS6-FAN	5kΩ					
		INDUCTOR						
L1902	L1190017	FL5H-102K	1mH					
L1901	L2030068							
		TRANSFORMER						
T1901	L3030094	MC-102C						
		RELAY						
RL1901,1902	M1190048	URK-3						
		CONNECTOR						
J1902,1904	P0090218	5045-02A						
J1903,1910,1911	P0090219	5045-03A						
J1905,1912	P0090220	5045-04A						
J1906	P0090221	5045-05A						
J1901	P0090223	5045-07A						
J1907–1909	P0090183	RT-01T-1.0B						
	Q5000049	TP-J						

SWITCH UNIT A

Symbol No.	Part No.	Description
PB-2369B	F0002369B	Printed Circuit Board
	C023690A	PCB with Components
		TRANSISTOR
Q2301	G3318150G	2SC1815GR

SWITCH UNIT B

Symbol No.	Part No.	Description
PB-2378A	F0002378A	Printed Circuit Board
	C023780A	PCB with Components
		SWITCH
S2401	N4090061	SUT21A1E36674680

UP/DOWN SWITCH UNIT

Symbol No.	Part No.	Description
PB-2379A	F0002379A	Printed Circuit Board
	C023790A	PCB with Components
		SWITCH
S2501–2503	N4090065	E31198940/KHC10902

PHOTO INTERRUPTER UNIT

Symbol No.	Part No.	Description
PB-2377	F0002377	Printed Circuit Board
	C023770A	PCB with Components
		PHOTO SENSOR
PS2601,2602	G0090003	EE-SH3-X-1
		RESISTOR
R2604	J01245221	Carbon film 1/4W TJ 220Ω
		POTENTIOMETER
VR2601,2602	J50754103	H0612A 10KB 10kΩB
		PLUG
P2601 (with wire)	T9204443	5250-04

PROTECTOR UNIT

Symbol No.	Part No.	Description
PB-2419A	F0002419A	Printed Circuit Board
	C024190A	PCB with Components
		IC
Q2901	G1090248	AN6551
		DIODE
D2901–2903	G2015550	Si 1S1555
		RESISTOR
R2905	J02245152	Carbon film 1/4W SJ 1.5kΩ
R2909	J01245152	" " " TJ 1.5kΩ
R2903,2908	J02245332	" " " SJ 3.3kΩ
R2911	J01245682	" " " TJ 6.8kΩ
R2904,2907	J02245103	" " " SJ 10kΩ
R2914	J02245183	" " " " 18kΩ
R2913	J02245333	" " " " 33kΩ
R2906,2910	J02245104	" " " " 100kΩ
R2901	J32009003	Meter shunt 0.125Ω±5%
R2902	J32009004	" " 0.025Ω±5%
R2915	J30376339	Cement 5W 3.3Ω
R2916	J20376181	Metallic film 5W 180Ω
		CAPACITOR
C2903–2905	K13179009	Ceramic 50WV 0.047μF (DD110F473Z50V02)
C2901,2902	K40129010	Electrolytic 16WV 2200μF (16RE2200)
C2906	K40129008	" " 33μF (16RE33)
		POTENTIOMETER
VR2901	J51723473	H1051A017-47KB 47kΩB
		INDUCTOR
CH2901	L2030069	1.7mH 2.5A
		CONNECTOR
J2902	P0090226	5045-10A
J2901	P1090289	5219-06A
J2903	Q6000074	M11-22-7P

CONTROL UNIT

Symbol No.	Part No.	Description
PB-2432	F0002432	Printed Circuir Board
	C024320A	PCB with Components
		IC
Q3501	G1090248	AN6551
Q3504	G1090123	NJM78L08

		TRANSISTOR
Q3502	G3318150Y	2SC1815Y
Q3503	G3405920Q	2SD592Q
		DIODE
D3501 3503	G2015550	Si 1S1555
		RESISTOR
R3509,3512	J01245102	Carbon film 1/4W TJ 1kΩ
R3505,3511	J02245102	" " " SJ 1kΩ
R3501	J02245152	" " " " 1.5kΩ
R3510	J02245472	" " " " 4.7kΩ
R3502,3506	J02245433	" " " " 43kΩ
R3503,3507	J02245473	" " " " 47kΩ
R3508	J02245563	" " " " 56kΩ
R3504	J02245394	" " " " 390kΩ
		CAPACITOR
C3501–3504	K13179008	Ceramic 50WV 0.01μF (DD106F103Z50V02)
C3505,3506	K70120002	Tantalum 16WV 10μF (489D106X0016C1)
		CONNECTOR
J3501,3502	P0090218	5045-02A
J3503	P0090219	5045-03A
	Q5000011	Wrapping terminal C

MONITOR UNIT

Symbol No.	Part No.	Description
PB-2477	F0002477	Printed Circuir Board
	C024470A	PCB with Components
		FET
Q3601,3603–3605	G3801070C	2SK107-3
		TRANSISTOR
Q3602	G3107331P	2SA733AP
Q3606	G3305090Y	2SC509Y
		DIODE
D3602	G2090027	Si 1SS53
D3601,3603	G2090244	Schottky 1SS106
		RESISTOR
R3614	J20306100	Metallic film 1W 10Ω
R3613	J02245182	Carbon " 1/4W SJ 1.8kΩ
R3604,3605,3612	J02245103	" " " " 10kΩ
R3602,3611	J02245223	" " " " 22kΩ
R3603,3606–3610	J02245563	" " " " 56kΩ
R3615	J02245683	" " " " 68kΩ
R3601	J02245104	" " " " 100kΩ

		POTENTIOMETER
VR3601	J50710104	V10K8-1-2B 100kΩ
		CAPACITOR
C3602	K19149017	Semiconductor Ceramic 25WV 0.022μF (UAT06X223K-L45AE)
C3601	K19149025	" " " 0.1μF (UAT13X104K-L46AE)
C3603	K40179013	Electrolytic 50WV 1μF (50RE1)
		CONNECTOR
J3601	P0090224	5045-08A
J3602	P0090219	5045-03A
J3603	P0090220	5045-04A
J3604	P0090223	5045-07A

100W PS UNIT

Symbol No.	Part No.	Description
		★★★ P.S CHASSIS ASSY ★★★
		TRANSISTOR
Q01	G3090039	2N5685
Q02	G3407170Y	2SD717Y
		DIODE
D02	G2090022	Si S5VB10
D01	G2090121	" S25VB10
		POWER TRANSFORMER
PT01	L3030103	
		THERMISTOR
TH01	G9090010	112302-2 3kΩ±15%
		PLUG
J01 (with wire)	T9202900	3191-02R1
J02 (")	T9204541	3191-04R1
J03 (")	T9204542	5250-02
		TERMINAL BLOCK
TB1	Q6000058	RGKS-8BY
		★★★ CAPACITOR UNIT ★★★
PB-2470	F0002470	Printed Circuit Board
	C024700A	PCB with Components
		CAPACITOR
C103	K40169013	Electrolytic 35WV 47μF (35RE47)
C105	K40129007	" 16WV 100μF (16RE100)

C101,102	K43170003	Electrolytic 50WV 18000μF (50L18000)
C104	K42140004	" 25WV 18000μF (25LP18000)
		★★★ 24V AVR UNIT ★★★
PB-2117	F0002117	Printed Circuit Board
	C021170A	PCB with Components
		FET
Q201	G3801470B	2SK147BL
		TRANSISTOR
Q203	G3109500Y	2SA950Y
Q202	G3110120Y	2SA1012Y
		DIODE
D201,202	G2090001	Si 10D1
D203	G2090111	Zener HZ6C1
		RESISTOR
R201	J02245560	Carbon film 1/4W 56Ω
R202	J02245152	" " " 1.5kΩ
R203	J02245332	" " " 3.3kΩ
R204	J02245153	" " " 15kΩ
		POTENTIOMETER
VR201	J50735472	CR29R47KB
		CAPACITOR
C201	K40179018	Electrolytic 50WV 47μF (50RE47)
C202	K40169003	" 35WV 330μF (35RE330)
C203	K50177473	Mylar 50WV 0.047μF (50F2U473M)
		★★★ 13.5V AVR UNIT ★★★
PB-2469	F0002469	Printed Circuit Board
	C024690A	PCB with Components
		FET
Q301	G3090035	2SK19TM-GR
		TRANSISTOR
Q302	G3109500Y	2SA950Y
Q303	G3110150G	2SA1015GR
		DIODE
D301,302	G2090001	Si 10D1
D303	G2090111	Zener HZ6C1

		RESISTOR	
R301	J02245560	Carbon film 1/4W	56Ω
R302	J02245821	" " "	820Ω
R303,304	J02245332	" " "	3.3kΩ
		POTENTIOMETER	
VR301	J51723472	H1051A011-4.7KB	4.7kΩB
		CAPACITOR	
C301,302	K40149003	Electrolytic 25WV (25RE100)	10μF
C303	K50177223	Mylar 50WV (50F2U223M)	0.022μF

100W P A UNIT

Symbol No.	Part No.	Description
PB-2013B	F0002013B	Printed Circuit Board
	C020134A	PCB with Components
		IC
Q8006	G1090294	μPC7808H
		TRANSISTOR
Q8001	G3315890	2SC1589
Q8002,8003	G3323950	2SC2395
Q8007	G3402880K	2SD288K
Q8004,8005	G3090059	MRF422
		DIODE
D8002–8005	G2090002	Si 10D10
D8001	G2090021	Zener YZ033
		THERMISTOR
TH8001	G9090009	32D27
		RESISTOR
R8026	J02245010	Carbon film 1/4W SJ 1Ω
R8009,8011	J00275159	" " 1/2W " 1.5Ω
R8016,8018	J20306159	Metallic " 1W 1.5Ω
R8006	J00275479	Carbon " 1/2W 4.7Ω
R8007	J00275180	" " " " 18Ω
R8019,8020	J20306180	Metalic " 1W 18Ω
R8012,8013	J00275240	" " " " 24Ω
R8002	J02245330	" " 1/4W " 33Ω
R8010	J01275390	" " 1/2W TJ 39Ω
R8021,8022	J22355390	Metallic " 3W 39Ω (ERG3SJ390 3W)
R8023	J21335680	" " 2W 68Ω
R8001	J02245121	Carbon " 1/4W SJ 120Ω
R8014,8015	J01275121	" " 1/2W TJ 120Ω
R8024	J01245151	" " 1/4W SJ 150Ω
R8003,8004	J00275331	" " 1/2W " 330Ω
R8008	J02275102	" " " " 1kΩ
R8005	J01245152	" " 1/4W TJ 1.5kΩ

		CAPACITOR
C8044	K30279026	Dipped Mica 500WV 82pF (DM15D820K5)
C8033	K30279041	" " 390pF (DM15D391K5)
C8032,8034	K30279945	" " " 560pF (DM15D561K5)
C8028	K30279092	" " " 750pF (DM19D751J5)
C8027,8029	K30279097	" " " 5000pF (DM19D502J5)
C8005,8006	K10179038	Ceramic 50WV B 0.0047μF (DD108B472K50V)
C8002,8010,8011, 8016,8036	K10179024	" " B 0.01μF (CDS080XB103K50V)
C8040,8041	K10246103	" 250WV 0.01μF (CD125XB103K250V)
C8001,8003,8007, 8008,8012,8014, 8017,8019,8021, 8023,8026,8045	K13179009	" 50WV F 0.047μF (DD110F473Z50V02)
C8030,8031	K55239001	Polypropylene 150WV 0.047μF (PRA473K200V)
C8037	K19179001	" 50WV 0.1μF (RSB305YF104Z6L5)
C8046,8047	K23140001	Chip 25WV 0.01μF (GR42Y5V103Z25V)
C8043	K19149007	Semiconductor Ceramic 0.0033μF (UAT05X332K-L05AE)
C8039	K50177104	Mylar 50WV 0.1μF (50F2U104M)
C8004,8009	K23170002	Ceramic Chip " 0.1μF (GR43Y5V104Z50V09)
C8022	K70120006	Tantalum 16WV 3.3μF (489D335X0016B1)
C8013,8015,8018, 8020,8024,8025, 8042	K70120002	" " 10μF (489D106X0016C1)
C8038	K40169003	Electrolytic 35WV 330μF (35RE330)
		POTENTIOMETER
VR8001	J51727222	H1021A309-2.2KB
		TRANSFORMER
T8001	L0020289A	
T8002	L0020631C	
T8003	L0021284	
		INDUCTOR
L8001–8004	L1020035A	
L8005	L1020015	
L8006	L1020395A	
L8007	L1020015	
	Q5000011	Wrapping terminal C
		TERMINAL
	Q5000006	STK-97
		INSULATOR
	Q9000029	BUSH-66

		SILICON PLATE
	Q9000192	T0-220
		MOTOR
	M2190004	MDN-7R1
		PLUG
P8001 (with wire)	T9204457A	3191-06R1
	T9204561	5250-03
	T9204560	5250-02

10W P S UNIT

Symbol No.	Part No.	Description
PB-2058	F0002058	Printed Circuit Board
	C020580A	PCB with Components
		IC
Q1501	G1090162	μPC78L12
		TRANSISTOR
Q1502	G3205290D	2SB529D
Q1503	G3407450S	2SD745S
		DIODE
D1502,1503	G2090001	Si 10D1
D1504	G9090005	Varistor MV103
		RESISTOR
R1501	J01275151	Carbon film 1/2W 150Ω
		CAPACITOR
C1505	K13179009	Ceramic 50WV 0.047μF (DD110F473Z50V02)
C1503	K50177473	Mylar " 0.047μF (50F2U473M)
C1504	K40129006	Electrolytic 16WV 470μF (16RE470)
C1502	K40149005	" 25WV 1000μF (25RE1000)
C1501	K43140003	" " 18000μF (25RL18000)
		POWER TRANSFORMER
PT1501	L3030065	
		PLUG
J1501 (with wire)	T9202200	3191-02R1
J1502 (")	T9202210	3191-04R1
	Q5000004	TP-D
	Q5000011	Wrapping terminal C

10W P A UNIT

Symbol No.	Part No.	Description
PB-2149B	F0002149B	Printed Circuit Board
	C021494A	PCB with Components
		IC
Q2805	G1090080	μPC78L08
		TRANSISTOR
Q2801	G3321660	2SC2166
Q2802,2803	G3325090	2SC2509
Q2804	G3408820Q	2SD882Q
		DIODE
D2802	G9090017	Varistor MV11
D2801	G2090021	Zener YZ033
		TRANSFORMER
T2801	L0020789A	
T2802	L0020833A	
T2803	L0020834A	
		INDUCTOR
L2801	L1190027	FL5H-390K 39μH
L2802	L1190009	FL4H-3R3M 3.3μH
L2803,2806	L1020032	
L2804	L1020015	
L2805	L1020666	2.4μH
		POTENTIOMETER
VR2801	J51727471	CR19R471 470Ω(B)
		RESISTOR
R2808,2810	J01275150	Carbon film 1/2W TJ 15Ω
R2807	J01275390	" " " " 39Ω
R2805	J01245151	" " 1/4W " 150Ω
R2809,2811	J01275151	" " 1/2W " 150Ω
R2815	J02245221	" " 1/4W SJ 220Ω
R2802	J01245271	" " " TJ 270Ω
R2801	J01245331	" " " " 330Ω
R2814	J02245331	" " " SJ 330Ω
R2803	J01245821	" " " TJ 820Ω
		CAPACITOR
C2817	K30276680	Dipped Mica 500WV 68pF (LCQ12680K5)
C2815,2816	K30276221	" " " 220p (LCQ17221K5)
C2826	K30276391	" " " 390p (LCQ1739K5)
C2818	K10179016	Ceramic 50WV 0.001μ (DB201YB102K5L5)
C2802	K10179038	" " 0.0047μ (DD108B472K50V02)
C2810	K10179024	" " 0.01μ (CDS080XB103K50)
C2801,2803, 2805–2807, 2809,2811,2813, 2814,2819,2823, 2825,2827	K13179009	" " 0.047μ (DD110F473Z50V02)

C2820,2821	K50177154	Mylar 50WV 0.15μF (50F2U154M)			
C2804,2824	K40149008	Electrolytic 25WV 10μF (25RE10)			
C2808,2812	K40129008	" 16WV 33μF (16RE33)			
C2822	K40129007	" " 100μF (16RE100)			
	Q5000011	Wrapping terminal C			

ACCESSORIES

Symbol No.	Part No.	Description
		AC POWER CORD
	T9013280	2 wire, 2 prong plug
	T9013282	3 wire, 3 prong plug (UL)
	T9013283	3 wire, 3 prong Australian plug
	T9013284	3 wire, 2 prong EU plug
		SPARE FUSE
	Q0000007	10A 100–117 VAC
	Q0000005	5A 200–234 VAC
	Q0000004	3A 10W Type
	Q0000031	13.6A DC
	Q0000032	6A DC
	R3054620	Foot 30
	R3054630A	Pad
		PLUG
	P0090007	SH3010
	P0090034	C107 (P2240)
	P0090008	SH3603
	P0090018	STP-58
	P0090031	E5-702B-02
	P1090164	FM148P
	Q9000105	DRY BATTERY (UM-3)

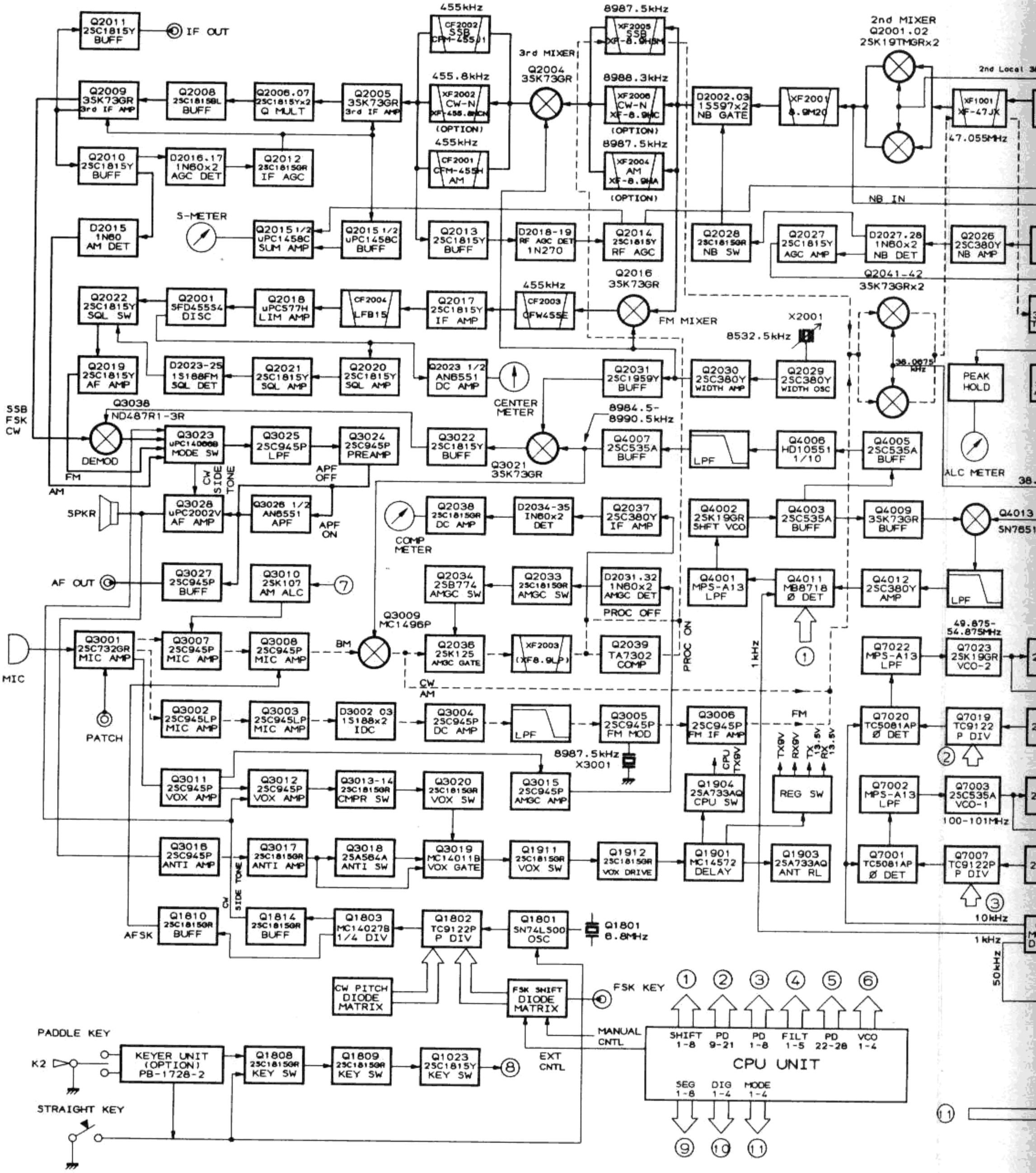
Q2011 2SC1815Y BUFF
IF OUT
Q2009 3SK73GR 3rd IF AMP
Q2008 2SC1815BL BUFF
Q2006.07 2SC1815Yx2 Q MULT
Q2005 3SK73GR 3rd IF AMP
455kHz
CF2002 SSB CFM-455J1
455.8kHz
XF2002 CW-N XF-455.8HCN
(OPTION)
455kHz
CF2001 CFM-455H AM
3rd MIXER
Q2004 3SK73GR
8987.5kHz
XF2005 SSB XF-8.9HSM
8988.3kHz
XF2006 CW-N XF-8.9HC
(OPTION)
8987.5kHz
XF2004 AM XF-8.9HA
(OPTION)
D2002.03 1S597x2 NB GATE
XF2001 8.9M20
2nd MIXER Q2001.02 2SK19TMGRx2
XF1001 XF-47JX
47.055MHz
Q2010 2SC1815Y BUFF
D2016.17 1N60x2 AGC DET
Q2012 2SC1815GR IF AGC
D2015 1N60 AM DET
S-METER
Q2015 1/2 uPC1458C SUM AMP
Q2015 1/2 uPC1458C BUFF
Q2013 2SC1815Y BUFF
D2018-19 RF AGC DET 1N270
Q2014 2SC1815Y RF AGC
Q2016 3SK73GR
NB IN
Q2028 2SC1815GR NB SW
Q2027 2SC1815Y AGC AMP
D2027.28 1N60x2 NB DET
Q2026 2SC380Y NB AMP
Q2041-42 3SK73GRx2
Q2022 2SC1815Y SQL SW
Q2001 SFD455S4 DISC
Q2018 uPC577H LIM AMP
CF2004 LFB15
Q2017 2SC1815Y IF AMP
455kHz
CF2003 CFW455E
FM MIXER
X2001
8532.5kHz
38.0675 kHz
Q2019 2SC1815Y AF AMP
D2023-25 1S188FM SQL DET
Q2021 2SC1815Y SQL AMP
Q2020 2SC1815Y SQL AMP
Q2023 1/2 AN6551 DC AMP
CENTER METER
Q2031 2SC1959Y BUFF
Q2030 2SC380Y WIDTH AMP
Q2029 2SC380Y WIDTH OSC
PEAK HOLD
SSB FSK CW
Q3038 ND487R1-3R
DEMOD
FM
AM
Q3023 uPC1406B MODE SW
Q3025 2SC945P LPF
Q3024 2SC945P PREAMP
Q3022 2SC1815Y BUFF
Q3021 3SK73GR
8984.5-8990.5kHz
Q4007 2SC535A BUFF
LPF
Q4006 HD10551 1/10
Q4005 2SC535A BUFF
ALC METER
CW SIDE TONE
APF OFF
APF ON
SPKR
Q3028 uPC2002V AF AMP
Q3026 1/2 AN6551 APF
Q2038 2SC1815GR DC AMP
D2034-35 1N60x2 DET
Q2037 2SC380Y IF AMP
COMP METER
Q4002 2SK19GR SHFT VCO
Q4003 2SC535A BUFF
Q4009 3SK73GR BUFF
Q4013
SN7651
AF OUT
Q3027 2SC945P BUFF
Q3010 2SK107 AM ALC
7
Q2034 2SB774 AMGC SW
Q2033 2SC1815GR AMGC SW
D2031.32 1N60x2 AMGC DET
PROC OFF
PROC ON
Q4001 MPS-A13 LPF
Q4011 MB8718 Ø DET
Q4012 2SC380Y AMP
LPF
Q3009 MC1496P
BM
MIC
Q3001 2SC732GR MIC AMP
Q3007 2SC945P MIC AMP
Q3008 2SC945P MIC AMP
Q2036 2SK125 AMGC GATE
XF2003 (XF8.9LP)
Q2039 TA7302 COMP
1 kHz
1
49.875-54.875MHz
Q7022 MPS-A13 LPF
Q7023 2SK19GR VCO-2
CW AM
PATCH
Q3002 2SC945LP MIC AMP
Q3003 2SC945LP MIC AMP
D3002 03 1S188x2 IDC
Q3004 2SC945P DC AMP
LPF
Q3005 2SC945P FM MOD
Q3006 2SC945P FM IF AMP
FM
TX9V RX9V TX 13.5V RX 13.5V
CPU TX9V
8987.5kHz X3001
Q7020 TC5081AP Ø DET
Q7019 TC9122 P DIV
2
Q3011 2SC945P VOX AMP
Q3012 2SC945P VOX AMP
Q3013-14 2SC1815GR CMPR SW
Q3020 2SC1815GR VOX SW
Q3015 2SC945P AMGC AMP
Q1904 2SA733AQ CPU SW
REG SW
Q7002 MPS-A13 LPF
Q7003 2SC535A VCO-1
100-101MHz
Q3016 2SC945P ANTI AMP
Q3017 2SC1815GR ANTI AMP
Q3018 2SA564A ANTI SW
Q3019 MC14011B VOX GATE
Q1911 2SC1815GR VOX SW
Q1912 2SC1815GR VOX DRIVE
Q1901 MC14572 DELAY
Q1903 2SA733AQ ANT RL
Q7001 TC5081AP Ø DET
Q7007 TC9122P P DIV
3
10kHz
1 kHz
50kHz
CW SIDE TONE
Q1810 2SC1815GR BUFF
AFSK
Q1814 2SC1815GR BUFF
Q1803 MC14027B 1/4 DIV
Q1802 TC9122P P DIV
Q1801 SN74LS00 OSC
Q1801 6.8MHz
CW PITCH DIODE MATRIX
FSK SHIFT DIODE MATRIX
FSK KEY
PADDLE KEY
K2
KEYER UNIT (OPTION) PB-1728-2
Q1808 2SC1815GR KEY SW
Q1809 2SC1815GR KEY SW
Q1023 2SC1815Y KEY SW
8
EXT CNTL
MANUAL CNTL
STRAIGHT KEY
1 2 3 4 5 6
SHIFT 1-8
PD 9-21
PD 1-8
FILT 1-5
PD 22-28
VCO 1-4
CPU UNIT
SEG 1-8
DIG 1-4
MODE 1-4
9 10 11
11
10
9

100W PWR AMP UNIT

IN → Q8001 2SC1589 DRIV → Q8002.03 2SC2395x2 DRIV → Q8004.05 MRF422x2 PWR AMP → OUT

10W PWR AMP UNIT

IN → Q2801 2SC2166 DRIV → Q2802.03 2SC2509x2 PWR AMP → OUT

ANT

2nd MIXER Q2001.02 SK19TMGRx2

2nd Local 38.0675MHz

XF1001 XF-47JX

Q1011 2SK125 1st IF AMP

47.055MHz

1st MIXER Q1009 2SK125

1st Local

Q1010 2SK125

47.055-77.055MHz

LPF

GEN Q1005.06 2SK125x2 RF AMP

AGC

HAM Q1007.08 2SK125x2 RF AMP

GEN BPF

LPF

ATT 0.10.20.30dB

HAM HPF

BAND DECODER

④

RF OUT

CM COUPLER

NB IN

D2027.28 1N60x2 NB DET

Q2026 2SC380Y NB AMP

Q2025 2SC1583G NB AMP

Q2024 2SC1583G NB AMP

Q2003 2SC380Y BUFF

HAM BPF

Q1021 2N4427 DRIVER

PWR AMP UNIT

LPF

Q2041-42 3SK73GRx2

1st Local

Q1018 3SK73GR TX IF AMP

Q1019 ND487C23R

Q1020 2SK125 TX RF AMP

⑦

Q1026 2SA733AQ BIAS SW

Q1022 2SC1959Y BIAS SW

Q1024 2SC1815Y UNLOCK SW

Q1025 2SA733AQ UNLOCK SW

38.0675MHz

PEAK HOLD

Q1017 2SC1815GR ALC AMP

1/2 Q1018 AN6552 FWD ALC

1/2 Q1018 AN6552 REV ALC

Q1015 2SC1815GR AM ALC

Q5025 SN74LS145 DECODER

⑥

⑧

Q5031 2SC1815GR UNLOCK SW

50kHz

Q4005 2SC535A BUFF

ALC METER

38.0675MHz

Q1012 2N4427 LOCAL AMP

BPF

Q5023 3SK73GR BUFF

Q5002-21 2SA738/2SK19 LOCAL VCOs

LPF

Q4014 MB8718 ÷ DET/DIV

Q4021 2SC380Y BUFF

⑤

Q4009 3SK73GR BUFF

Q4013 SN76514N

Q2032 2SC1923 LOCAL AMP

Q4027 2SC380Y BUFF

Q5022 3SK73GR BUFF

Q4030 SN76514N

BPF

Q4024 2SC1923R AMP

Q4022 HD10551 1/10

43.055MHz-43.555MHz

Q4012 2SC380Y AMP

LPF

90MHz

X4001 38.0675MHz

Q4026 2SC380Y OSC

Q4028 SN76514N

BPF

Q4029 2SC1923R AMP

BPF

4.9875MHz-5.4875MHz

49.875-54.875MHz

Q7022 MPS-A13 LPF

Q7023 2SK19GR VCO-2

Q7024 2SC535A BUFF

Q7025 HD10551 1/10

LPF

Q7035 2SC535A BUFF

LPF

Q7033 2SC535A DOUBLER

2.00-1.9901MHz

60MHz

Q7017 SN76514N

Q7020 TC5081AP ÷ DET

Q7019 TC9122 P DIV

Q7018 2SC535A AMP

LPF

Q7016 2SC535A BUFF

Q7015 2SC535A AMP

BPF

BPF

②

10.000-10.099MHz

62.00-81.9901MHz

30MHz

Q7014 SN76514N

Q7010

Q7002 MPS-A13 LPF

Q7003 2SC535A VCO-1

Q7008 2SC535A BUFF

Q7009 HD10551 1/10

LPF

BPF

Q7011 2SC1815Y AMP

Q7012 2SC1815Y AMP

Q7013 SN74LS90 1/10 DIV

100-101MHz

SN76514N

Q7001 TC5081AP ÷ DET

Q7007 TC9122P P DIV

Q7006 2SC535A AMP

LPF

Q7005 SN76514N

Q7004 2SC535A BUFF

Q7032 2SC535A BUFF

Q7031 2SC535A TPLR

Q7030 2SC1815Y 30MHz AMP

Q7029 2SC1815Y 30MHz OSC

X7001 30MHz REF FREQ

③

10kHz

Q4015 MC14518 DIVIDER

Q4018 SN74LS90 1/10 DIV

1MHz

Q4019 SN74LS90 1/3 DIV

3MHz

Q4020 SN74LS90 1/10 DIV

30MHz

Q4025 2SC535C AMP

Q7034 2SC1815Y BUFF

30MHz

1kHz

100kHz

30MHz

50kHz

Q4023 2SC380Y BUFF

50kHz

AF/IF UNIT MODE SELECT

⑪

Q2701 MODE LATCH

Q2702 SN74LS145 DECODER

D2701-14 1SS54 DIODE MATRIX

Q1605 SN7445 DECODER

D1601-13 D1614-24 1S1554 DIODE MATRIX

Q1601 TC5087BP DISP DRIV

⑩

Q1606 MC14514B DECODER

Q1604 MSL912RS DISP DRIV

V1402 FIP-9P5 SUB DISPLAY

Q1603 MSL912RS DISP DRIV

V1401 FIP-9E8A MAIN DISPLAY

⑨

Q1602 MSL912RS DISP DRIV

RECEIVE

CONTROL

TRANSMIT

FT-980

BLOCK DIAGRAM

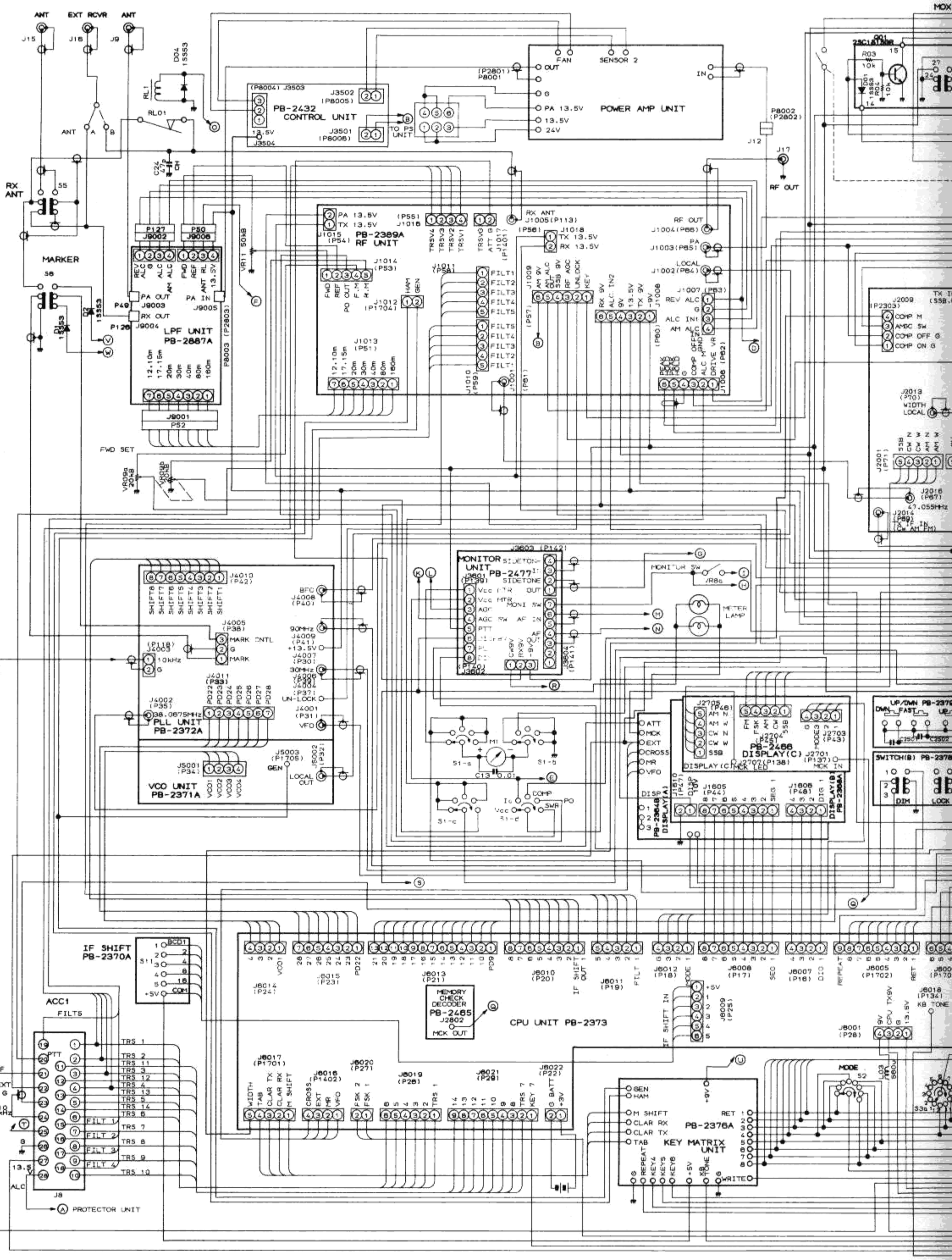
ANT
EXT RCVR
ANT
J15
J16
J9
D04 1S553
RL1
RL01
ANT A B
C24 47P CH
RX ANT
S5
MARKER
S6
D2 1S553
D1 1S553
P49
P126
P127
J9002
P50
J9006
REV ALC G
ALC
ALC AM
FWD REF
ANT RL
13.5V
PA OUT
J9003
RX OUT
J9004
PA IN
J9005
LPF UNIT
PB-2887A
12.10m
17.15m
20m
30m
40m
80m
160m
P8003 (P2803)
J9001
P52
VR11 50kB
FWD SET
VR09a 20kB
VR09b 20kB
(P8004) J3503
J3502 (P8005)
PB-2432
CONTROL UNIT
13.5V
J3504
J3501 (P8006)
TO PS UNIT
(P2801) P8001
FAN
SENSOR 2
OUT
G
PA 13.5V
13.5V
24V
POWER AMP UNIT
IN
P8002 (P2802)
J12
J17
RF OUT
PA 13.5V
TX 13.5V
(P55)
J1015 (P54)
PB-2389A
RF UNIT
J1014 (P53)
FWD REF PO OUT F.M 4.M
J1012 (P1704)
HAM GEN
J1013 (P51)
12.10m 17.15m 20m 30m 40m 80m 160m
TRSV4 TRSV3 TRSV2 TRSV1 TRSVG ATT G
J1017 (P1401)
RX ANT J1005(P113)
(P56)
J1018
TX 13.5V
RX 13.5V
J1011 (P58)
FILT1 FILT2 FILT3 FILT4 FILT5
FILT5 FILT4 FILT3 FILT2 FILT1
J1010 (P59)
J1001 (P61)
J1009 AM 9V AM ALC OUT SSB 9V RF AGC UNLOCK KEY
(P57)
RX 9V ALC IN2 9V 13.5V TX 9V -9V
J1008 (P60)
RF OUT J1004(P88)
PA J1003(P85)
LOCAL J1002(P84)
J1007 (P83)
REV ALC G ALC IN1 AM ALC
J1006 (P82)
PEAK HOLD TIME COMP OFF ALC MTR DRIVE VR
J2009 (P2303)
COMP M AMSC SW COMP OFF G COMP ON G
J2013 (P70) WIDTH LOCAL
J2001 (P71)
SSB CW AM
J2016 (P87) 47.055MHz
J2014 (P88) TX IF IN (CW AM FM)
J4010 (P42)
SHIFT8 SHIFT7 SHIFT6 SHIFT5 SHIFT4 SHIFT3 SHIFT2 SHIFT1
BFO J4008 (P40)
90MHz J4009 (P41) +13.5V
30MHz J4007 (P30)
UN-LOCK J4001 (P31)
VFO
J4005 (P38)
MARK CNTL G MARK
(P118) J4003
10kHz G
FROM VFO
J4011 (P33)
PD22 PD23 PD24 PD25 PD26 PD27 PD28
J4002 (P35)
38.0675MHz
PLL UNIT
PB-2372A
J5003 (P1705)
GEN
J5002 (P32)
LOCAL OUT
J5001 (P34)
VCO1 VCO2 VCO3 VCO4
VCO UNIT
PB-2371A
J3603 (P142)
MONITOR UNIT
PB-2477
J3601 (P139)
SIDETONE
Vcc PTR OUT
Vcc MTR MONI SW
AGC
AGC SW AF IN
PTT
J3602 (P140)
J3604 (P141)
C+9V RX9V -9V
MONITOR SW
VR86
METER LAMP
M1
S1-a
S1-b
C13 0.01
S1-c
S1-d
COMP
SWR
PO
ATT
MCK
EXT
CROSS
MR
VFO
J2705 (P48)
AM N
AM W
CW N
CW W
SSB
J2704 (P47)
FM FSK AM CW SSB
J2703 (P43)
MODE3
J2701 (P137)
MCK IN
PB-2486
DISPLAY(C)
J2707(P138)
MCK LED
DISPLAY(C)
J1610 (P47)
DISP 10V
J1605 (P44)
J1606 (P46)
SEG 1
DIG 1
DISP
PB-2364B DISPLAY(A)
PB-2365A DISPLAY(B)
UP/DWN PB-2376
DWN FAST UP
SWITCH(B) PB-2378
DIM
LOCK
IF SHIFT PB-2370A
S11
BCD1 2 4 8 16 COM +5V
ACC1
FILT5
PTT
TX OFF
EXT
G
10 kHz
13.5V
ALC
J8
TRS 1
TRS 2
TRS 11
TRS 3
TRS 12
TRS 4
TRS 13
TRS 5
TRS 14
TRS 6
TRS 7
TRS 8
TRS 9
TRS 10
FILT 1
FILT 2
FILT 3
FILT 4
A PROTECTOR UNIT
J6014 (P24)
VCO1
J6015 (P231)
PD22 PD23 PD24 PD25 PD26 PD27 PD28 PD29
J6013 (P21)
J6010 (P20)
IF SHIFT OUT
J6011 (P19)
FILT
J6012 (P18)
MODE
J6008 (P17)
SEG
J6007 (P16)
DIG
J6005 (P1702)
REPEAT
RET
J6018 (P1341)
KB TONE
J6009 (P25)
IF SHIFT IN
+5V
J6001 (P28)
9V CPU TX9V G 13.5V
MEMORY CHECK DECODER
PB-2465
J2802
MCK OUT
CPU UNIT PB-2373
J6017 (P1701)
WIDTH TAB CLAR TX CLAR RX M SHIFT
J6016 (P1402)
CROSS EXT MR VFO
J6020 (P27)
FSK 2 FSK 1
J6019 (P28)
6 5 4 3 2 TRS 1
J6021 (P29)
14 13 12 11 10 9 8 TRS 7 KEY 7
J6022 (P22)
G BATT +3V
GEN HAM
M SHIFT
CLAR RX
CLAR TX
TAB
PB-2376A
KEY MATRIX UNIT
G REPEAT KEY4 KEY5 KEY6 -5V KB TONE G WRITE
-9V
RET 1 2 3 4 5 6 7 8
MODE 52
L03 560u
33a 1/2

FT-980 CONNECTION DIAGRAM

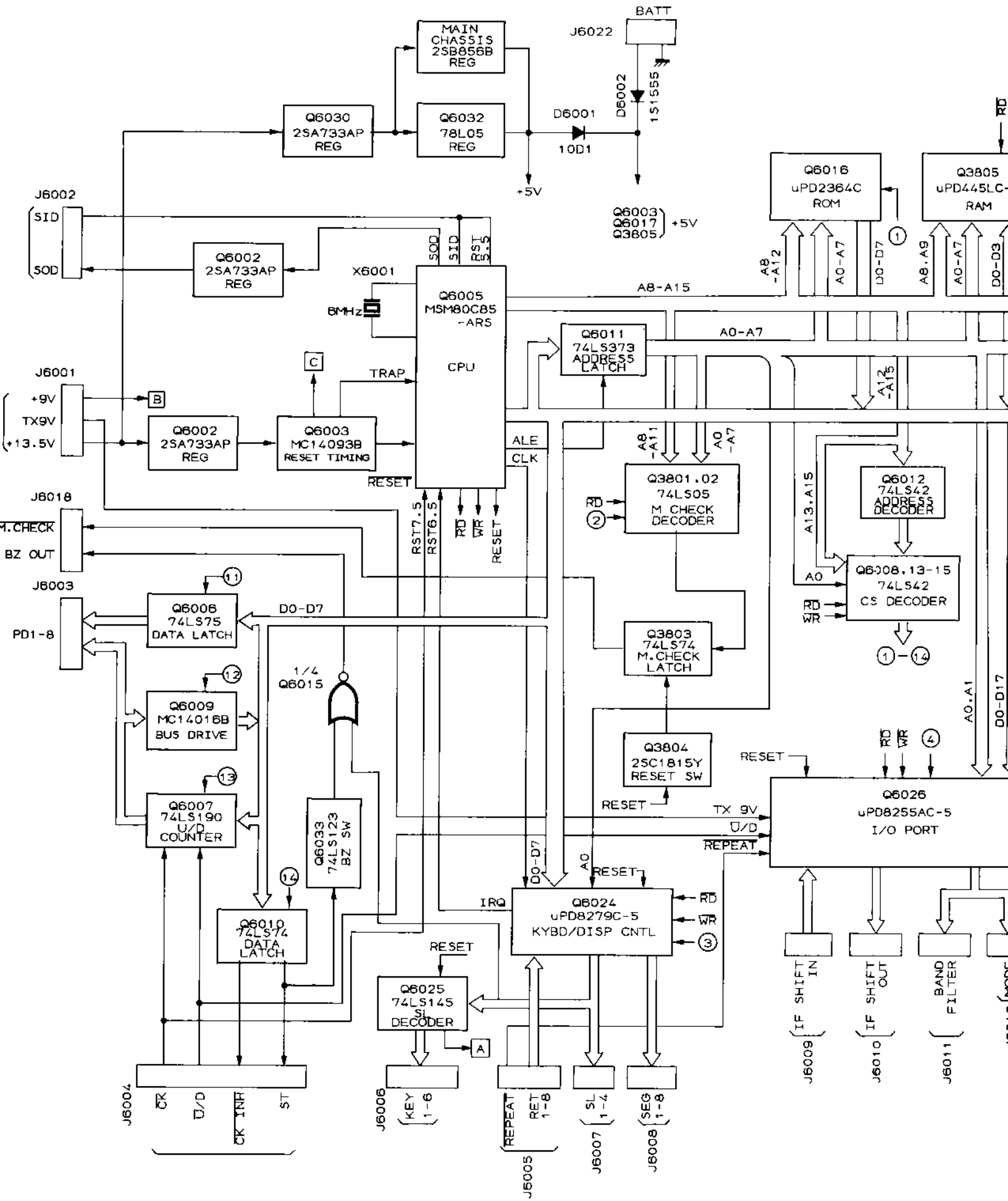
MAIN CHASSIS 2SB856B REG
BATT
J6022
D6002
1S1555
Q6030 2SA733AP REG
Q6032 78L05 REG
D6001
10D1
+5V
Q6003 Q6017 Q3805 +5V
J6002
SID
SOD
Q6002 2SA733AP REG
X6001
6MHz
Q6005 MSM80C85 -ARS
CPU
TRAP
RESET
ALE
CLK
RST7.5
RST6.5
RD
WR
Q6016 uPD2364C ROM
Q3805 uPD445LC- RAM
A8 -A12
A0-A7
D0-D7
A8.A9
D0-D3
A8-A15
Q6011 74LS373 ADDRESS LATCH
A12 -A15
J6001
+9V
TX9V
+13.5V
Q6002 2SA733AP REG
Q6003 MC14093B RESET TIMING
J6018
M.CHECK
BZ OUT
Q3801.02 74LS05 M CHECK DECODER
A8 -A11
A0 -A7
A13.A15
Q6012 74LS42 ADDRESS DECODER
Q6008.13-15 74LS42 CS DECODER
A0
J6003
PD1-8
Q6006 74LS75 DATA LATCH
Q3803 74LS74 M.CHECK LATCH
1/4 Q6015
Q6009 MC14016B BUS DRIVE
Q6007 74LS190 U/D COUNTER
Q6033 74LS123 BZ SW
Q3804 2SC1815Y RESET SW
Q6026 uPD8255AC-5 I/O PORT
TX 9V
U/D
REPEAT
Q6024 uPD8279C-5 KYBD/DISP CNTL
IRQ
Q6010 74LS74 DATA LATCH
Q6025 74LS145 SL DECODER
J6004
CK
D/D
CK INH
ST
J6006
KEY 1-6
J6005
REPEAT
RET 1-8
J6007
SL 1-4
J6008
SEG 1-8
J6009
IF SHIFT IN
J6010
IF SHIFT OUT
J6011
BAND FILTER

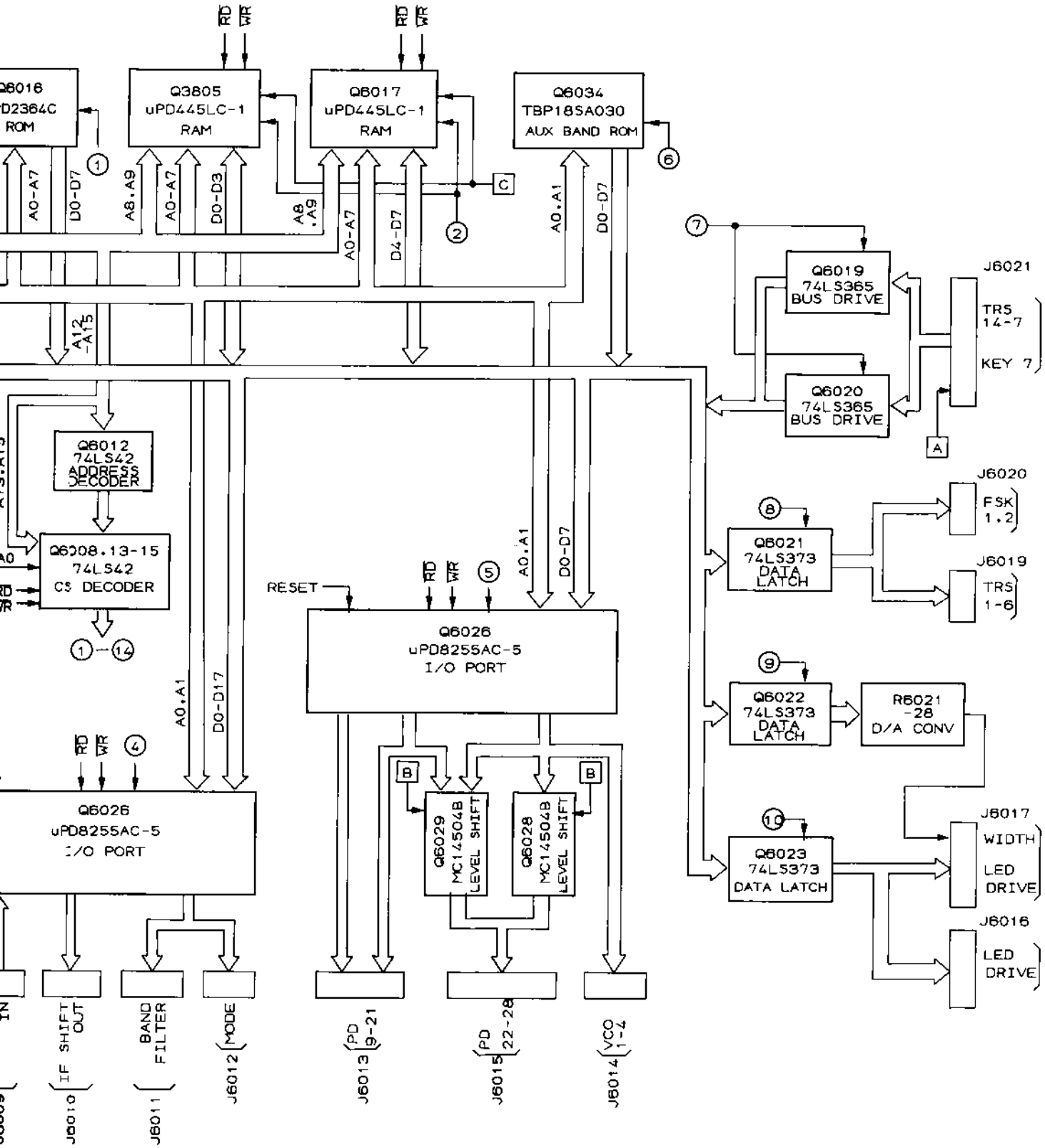

FT-980
CPU BOARD CIRCUIT DIAGRAM

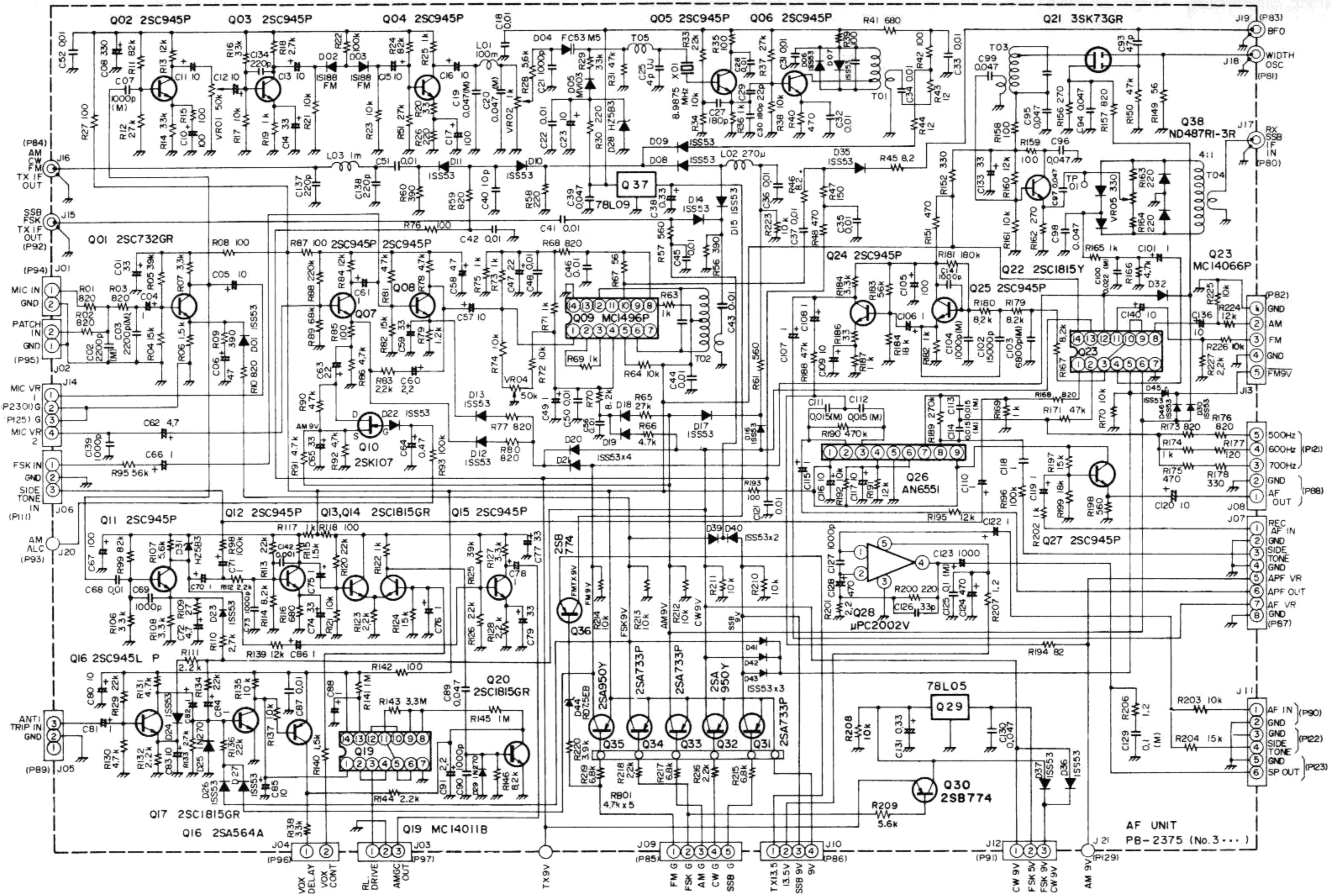

Q02 2SC945P
Q03 2SC945P
Q04 2SC945P
Q05 2SC945P
Q06 2SC945P
Q21 3SK73GR
Q38 ND487R1-3R
Q01 2SC732GR
Q24 2SC945P
Q22 2SC1815Y
Q23 MC14066P
Q25 2SC945P
Q09 MC1496P
Q10 2SK107
Q26 AN6551
Q27 2SC945P
Q28 μPC2002V
Q11 2SC945P
Q12 2SC945P
Q13,Q14 2SC1815GR
Q15 2SC945P
Q16 2SC945L P
Q20 2SC1815GR
Q17 2SC1815GR
Q16 2SA564A
Q19 MC14011B
Q30 2SB774
78L05
Q29
AF UNIT
PB-2375 (No.3 ···)
Q02 MPSA-13
Q03 2SC535A
Q08 2SC535A
Q29 2SC1815Y
Q30 2SC1815Y

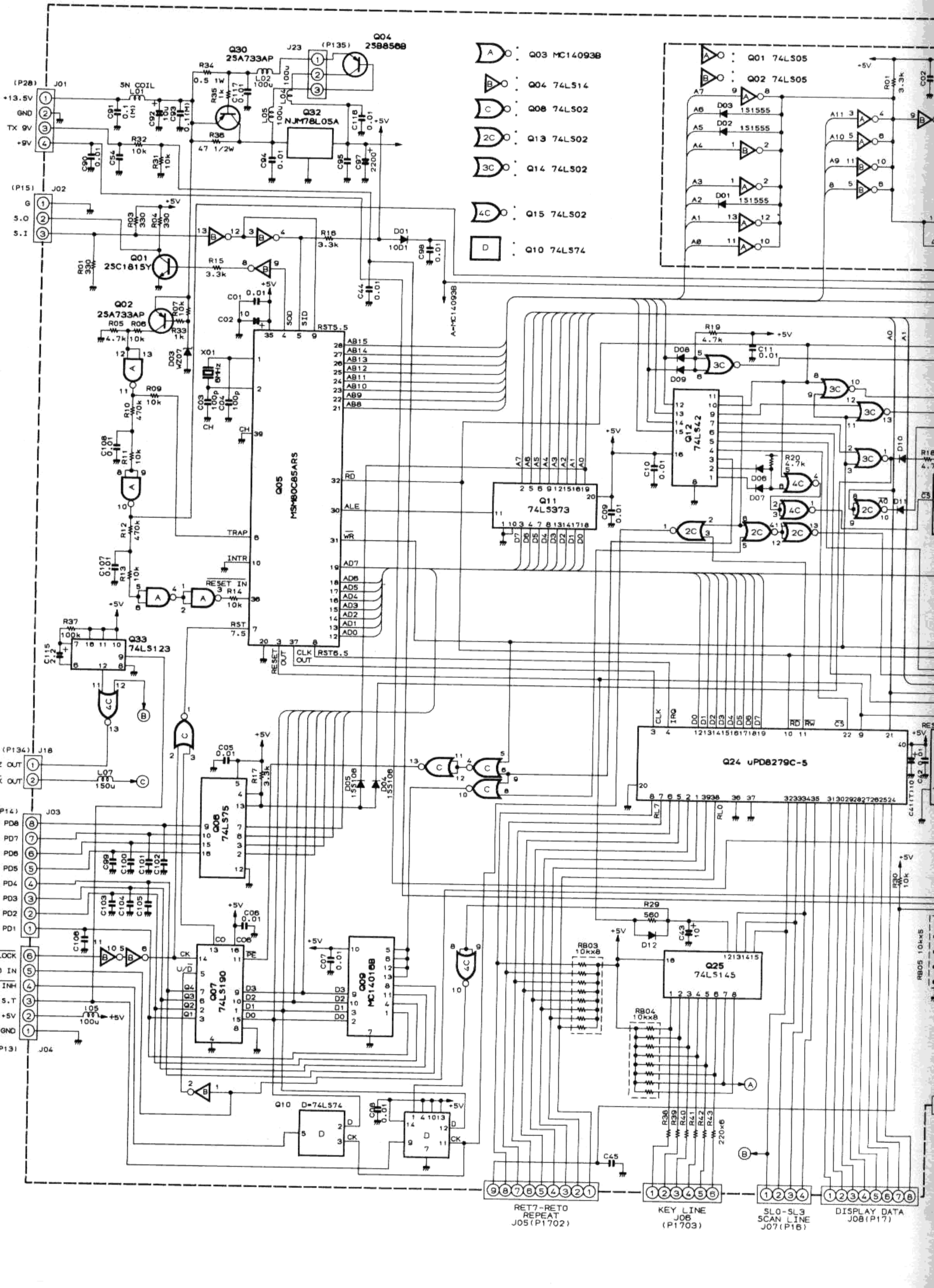
Q03 MC140938
Q04 74LS14
Q08 74LS02
Q13 74LS02
Q14 74LS02
Q15 74LS02
Q10 74LS74
Q01 74LS05
Q02 74LS05
Q30 2SA733AP
Q04 2SB588
Q32 NJM78L05A
Q01 2SC1815Y
Q02 2SA733AP
Q33 74LS123
Q05 MSM80C85ARS
Q11 74LS373
Q12 74LS42
Q24 uPD8279C-5
Q06 74LS75
Q07 74LS190
Q09 MC140168
Q25 74LS145
RET7-RET0 REPEAT J05(P1702)
KEY LINE J06 (P1703)
SL0-SL3 SCAN LINE J07(P16)
DISPLAY DATA J08(P17)

CPU UNIT PB-2373 (No.60xx)

MCK DECODER UNIT
PB-2465 (No38xx)

Q01 74LS05
Q02 74LS05

Q03 74LS74

Q04 2SC1815Y

Q05 uPD445LC-1

Q15 uPD2364C-768

Q16 uPD2364C-768

Q17 uPD445LC-1

Q19 74LS385

Q20 74LS385

Q21 74LS373

Q22 74LS373

Q23 74LS373

Q24 uPD8279C-5

Q26 uPD8255AC-5

Q27 uPD8255AC-5

Q28 MC145048

Q29 MC145048

Q34 TBP18SA030 (OPTION)

RB01 10kx8

RB02 10kx8

RB05 10kx5

J22(P22) BATT

J21

J20

J19

J17

J16

J15

J14

IF SHIFT J09(P25)

IF SHIFT (OUT) J10(P20)

BAND FILTER J11(P19)

MODE G J12(P18)

PD9-PD21 J13(P21)

SL0-SL3 SCAN LINE J07(P16)

DISPLAY DATA J08(P17)

RESISTOR VALUES ARE IN OHMS, 1/4W; CAPACITOR VALUES ARE In uF.50wv;
AND INDUCTOR VALUES ARE IN H; UNLESS OTHERWISE NOTED
(T) CAPACITORS ARE TANTALUM.16wv
(M) CAPACITORS ARE POLYESTER FILM.50wv
WHERE VALUE IS SPECIFIED CAPACITORS ARE 0.0022uF
DIODES ARE 1S1555 UNLESS NOTED

RESISTOR VALUES ARE IN OHMS. 1/4W.CAPACITOR VALUES ARE UF. 50WV AND
INDUCTOR VALUES ARE IN HENRIES. UNLESS OTHERWISE NOTED
DIODES ARE 1S1554 UNLESS OTHERWISE NOTED
(M)CAPACITORS ARE POLYESTER FILM. 50WV
(T)CAPACITORS ARE TANTALUM. 16WV

DISPLAY UNIT(A) PB-2364B (No.14xx)

DISPLAY UNIT(B) PB-2368A (No.16xx)

DISPLAY UNIT(C) PB-2266 (No.37xx)

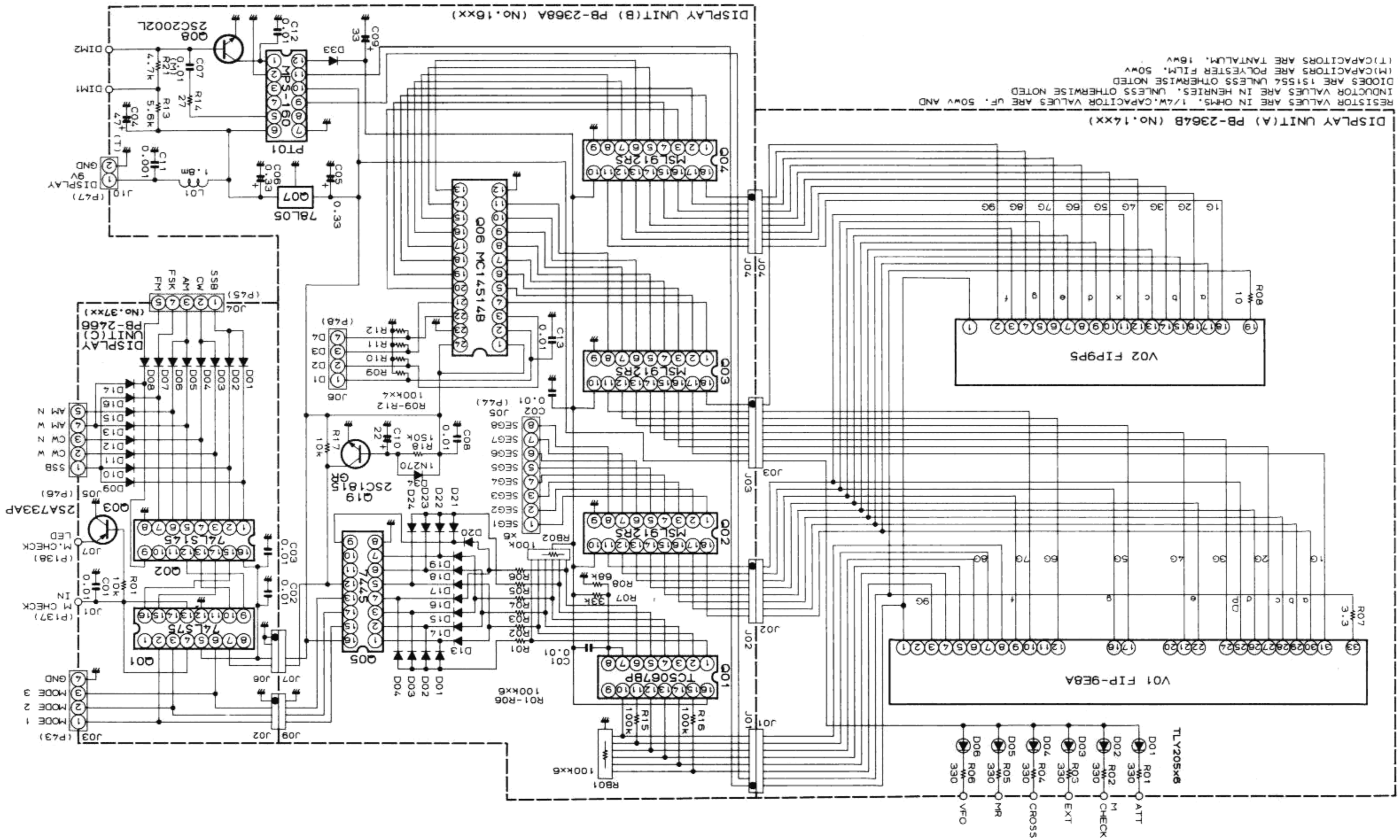



CW SIDETONE SW

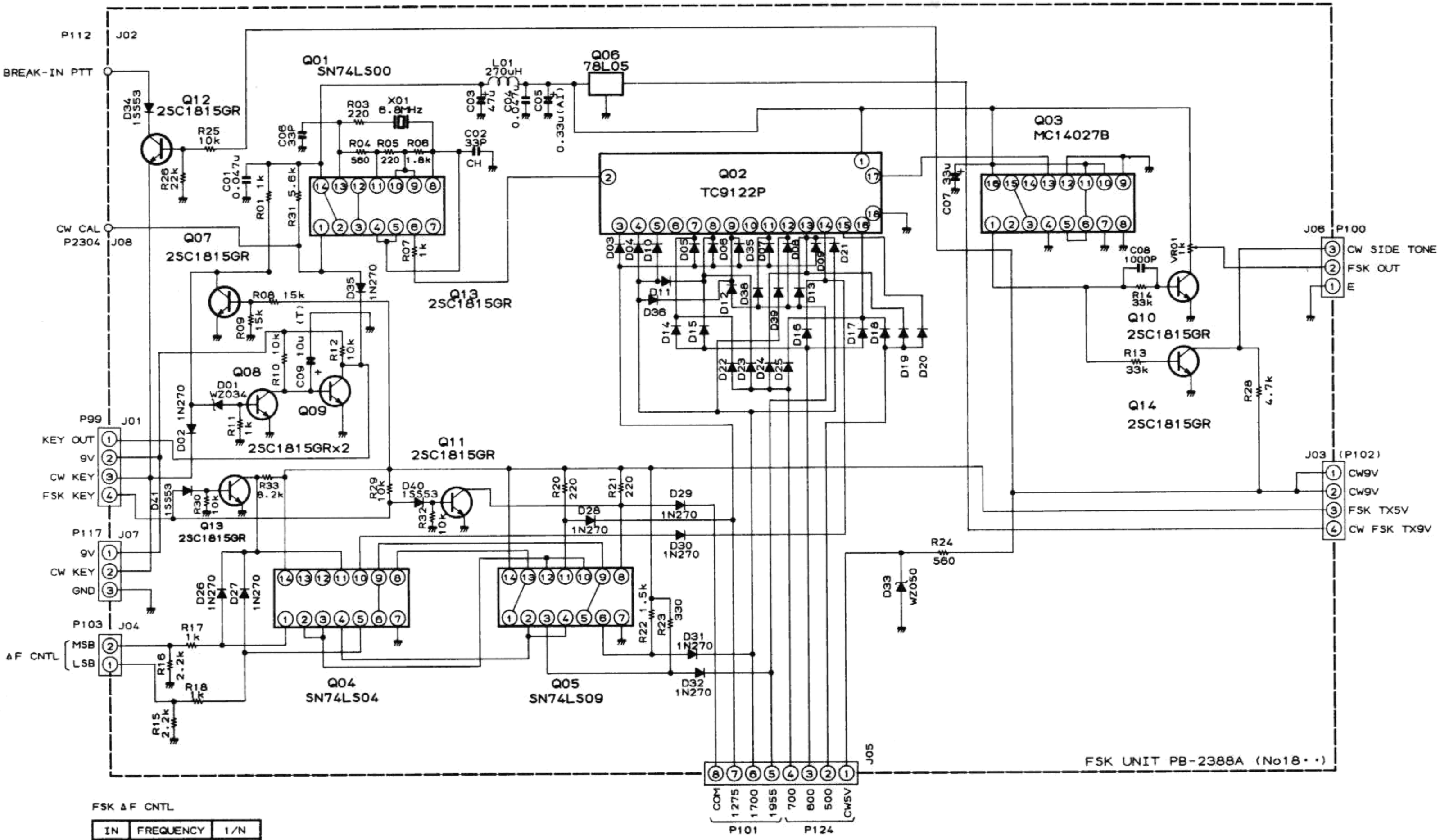

FSK ΔF CNTL

IN	FREQUENCY	1/N
0 0	RESET	
0 1	2550Hz	666
1 0	2975Hz	571
1 1	2295Hz	740
CW	500Hz	3400
	800Hz	2830
	700Hz	2430

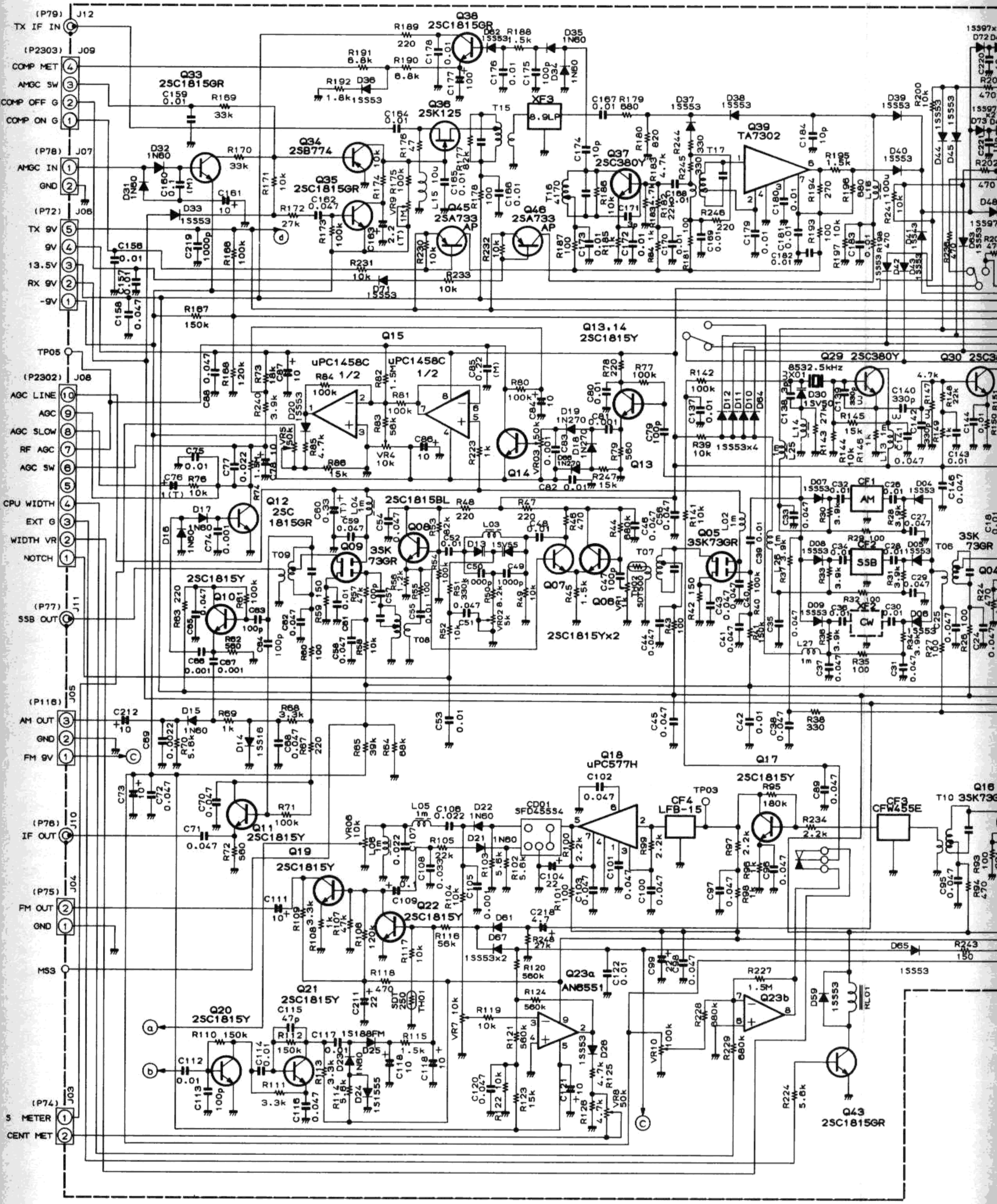
(P79) J12
TX IF IN
(P2303) J09
COMP MET
AMGC SW
COMP OFF G
COMP ON G
(P78) J07
AMGC IN
GND
(P72) J06
TX 9V
9V
13.5V
RX 9V
-9V
TP05
(P2302) J08
AGC LINE
AGC
AGC SLOW
RF AGC
AGC SW
CPU WIDTH
EXT G
WIDTH VR
NOTCH
(P77) J11
SSB OUT
(P116) J05
AM OUT
GND
FM 9V
(P76) J10
IF OUT
(P75) J04
FM OUT
GND
MS3
(P74) J03
S METER
CENT MET
Q38 2SC1815GR
Q33 2SC1815GR
Q36 2SK125
Q34 2SB774
Q35 2SC1815GR
Q45 2SA733 AP
Q46 2SA733 AP
XF3 8.9LP
T15
Q37 2SC380Y
Q39 TA7302
T16
T17
Q15
uPC1458C R84 1/2
uPC1458C 1/2
Q13,14 2SC1815Y
Q14
Q13
Q12 2SC 1815GR
2SC1815BL
Q08
Q09 3SK 73GR
Q07
Q06
2SC1815Yx2
Q05 3SK73GR
T07
T08
T09
Q10 2SC1815Y
Q11 2SC1815Y
Q19 2SC1815Y
Q22 2SC1815Y
Q20 2SC1815Y
Q21 2SC1815Y
Q18 uPC577H
CD01 SFD455S4
TP03
CF4 LFB-15
CF1 AM
CF2 SSB
CF3 CFW455E
Q17 2SC1815Y
Q16 T10 3SK73G
Q04
T06
Q23a AN6551
Q23b
Q43 2SC1815GR
Q29 2SC380Y
Q30 2SC3
8532.5kHz
X01
D30 1SV50
D12 D11 D10 D64
R142 100k
R39 10k 1SS53x4
R145 15k
R144 10k
R146 1k
R147 4.7k
R148 22k
R149 1k
R150
C137 0.01
C138 3p
C139 330p
C140 330p
C141 1m
C142 330p
C143 0.047
C144 0.01
C145 0.047
L14
L25 1m
L13 1m
D07 1SS53
D08 1SS53
D09 1SS53
D04 1SS53
D05 1SS53
D06 1SS53
C32 0.01
C33 0.047
C34 0.01
C35 0.047
C36 0.01
C37 0.047
C26 0.01
C27 0.047
C28 0.01
C29 0.047
C30 0.01
C31 0.047
R30 3.9k
R33 3.9k
R36 3.9k
R28 3.9k
R31 3.9k
R34 3.9k
R29 100
R32 100
R35 100
R27 100
R24 470
R25 100
R26 100
C18 0.01
C24 0.047
C25 0.047
R141 10k
R42 150
R43 100
R40 100k
R41 150k
C39 0.01
C40 0.047
C41 0.047
C42 0.01
C43 0.047
C44 0.047
C45 0.047
R38 330
C46 0.047
C47 100p
C48 91
C49 1000p
C50 1000p
C51 0.047
C52 0.01
C53 0.01
C54 0.047
C55 0.01
C56 0.047
C57 100p
C58 0.047
C59 0.047
C60 0.33
C61 0.01
C62 0.047
C63 100p
C64 100p
C65 0.047
C66 0.001
C67 0.001
R44 680k
R45 1.5k
R46 470
R47 220
R48 220
R49 10k
R50 8.2k
R51 330k
R52 10k
R53 82k
R54 100k
R55 100
R56 1.2k
R57 47k
R58 10k
R59 150
R60 100
R61 100k
R62 560
R63 220
C75 0.01
C76 1(T)
C77 0.022
C78 1.5n
C79 100p
C80 0.01
C81 0.001
C82 0.01
C83 0.001
C84 10
C85 0.22 (M)
C86 10
C87 10
C88 0.047
R73 18k
R74 1.5k
R75 10k
R76 10k
R77 100k
R78 220
R79 560
R80 100k
R81 100k
R82 1.5M
R83 56k
R84 100k
R85 4.7k
R86 15k
R87 150k
R88 120k
R89 220
R90 6.8k
R91 6.8k
R92 1.8k
R93 100
R94 470
R95 180k
R96 1k
R97 2.2k
R98 1k
R99 2.2k
R100 2.2k
R101 100
R102 5.6k
R103 5.6k
R104 10k
R105 22k
R106 10k
R107 47k
R108 3.3k
R109 3.3k
R110 150k
R111 3.3k
R112 150k
R113 3.3k
R114 5.8k
R115 1.5k
R116 56k
R117 10k
R118 470
R119 10k
R120 560k
R121 560k
R122 560k
R123 15k
R124 560k
R125 4.7k
R126 4.7k
R127 22
R128 100
R129 100
VR1 1k
VR2 5k
VR3 50k
VR4 10k
VR5 50k
VR6 10k
VR7 10k
VR8 50k
VR9 100k
VR10 100k
C100 0.047
C101 0.047
C102 0.047
C103 0.047
C104 22
C105 0.001
C106 0.022
C107 0.022
C108 0.033
C109 0.1
C110 0.047
C111 10
C112 0.01
C113 100p
C114 0.01
C115 47p
C116 0.047
C117 0.1
C118 10
C119 10
C120 0.047
C121 10
C122 0.01
C123 0.01
C124 0.01
C125 0.01
C126 0.01
C127 0.01
C128 0.01
C129 0.01
C130 0.01
C131 0.01
C132 0.01
C133 0.01
C134 0.01
C135 0.01
C136 0.01
C137 0.01
C138 3p
C139 330p
C140 330p
C141 1m
C142 330p
C143 0.047
C144 0.01
C145 0.047
C146 0.047
C147 0.01
C148 0.01
C149 0.01
C150 0.01
C151 0.01
C152 0.01
C153 0.01
C154 0.01
C155 0.01
C156 0.01
C157 0.01
C158 0.047
C159 0.01
C160 0.1 (M)
C161 10
C162 0.047
C163 2.2 (T)
C164 0.01
C165 0.01
C166 0.01
C167 0.01
C168 0.01
C169 0.01
C170 0.01
C171 9p
C172 0.01
C173 0.01
C174 10p
C175 100p
C176 0.01
C177 100
C178 0.01
C179 0.01
C180 0.01
C181 0.01
C182 0.01
C183 0.01
C184 10p
C185 0.01
C186 10k
C187 100
C188 0.01
C189 0.01
C190 0.01
C191 0.01
C192 0.01
C193 100
C194 0.01
C195 0.01
C196 0.01
C197 10k
C198 0.01
C199 0.01
C200 0.01
C201 0.01
C202 0.01
C203 0.01
C204 0.01
C205 0.01
C206 0.01
C207 0.01
C208 0.01
C209 0.01
C210 0.01
C211 22
C212 10
C213 0.01
C214 0.01
C215 0.01
C216 0.01
C217 0.01
C218 4.7
C219 1000p
C220 0.01
C221 0.01
C222 0.01
C223 0.01
C224 0.01
C225 0.01
C226 0.01
C227 0.01
C228 0.01
C229 0.01
C230 0.01
C231 0.01
C232 0.01
C233 0.01
C234 0.01
C235 0.01
C236 0.01
C237 0.01
C238 0.01
C239 0.01

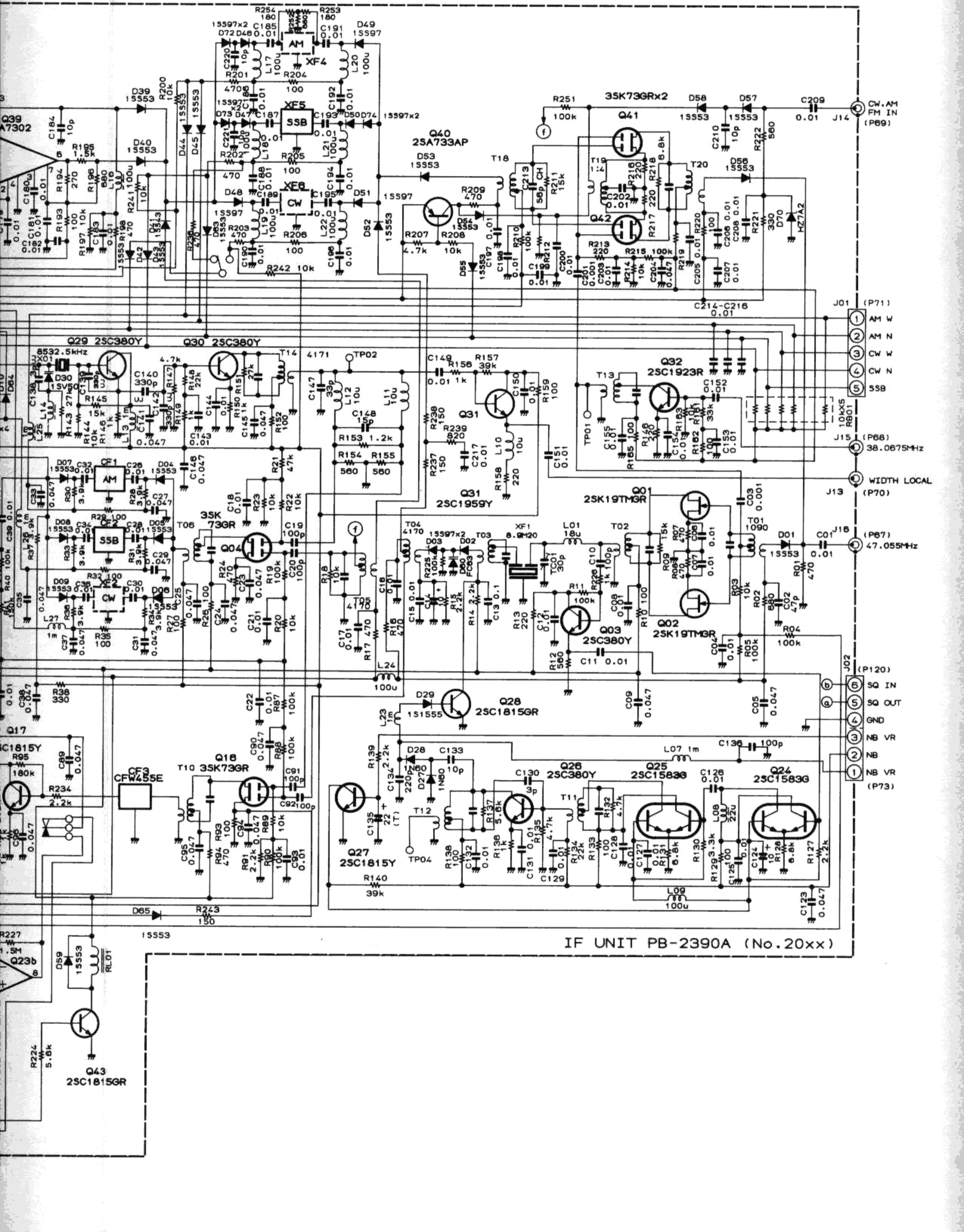
XF4
AM
XF5
SSB
XF6
CW
Q40
2SA733AP
3SK73GRx2
Q41
Q42
Q29 2SC380Y
Q30 2SC380Y
Q31
2SC1959Y
Q32
2SC1923R
Q01
2SK19TMGR
Q02
2SK19TMGR
Q03
2SC380Y
Q04
3SK
73GR
Q17
Q18
T10 3SK73GR
Q23b
Q24
2SC1583G
Q25
2SC1583G
Q26
2SC380Y
Q27
2SC1815Y
Q28
2SC1815GR
Q43
2SC1815GR
CF1
CF2
CF3
CFW455E
J14
CW.AM
FM IN
(P69)
J01 (P71)
AM W
AM N
CW W
CW N
SSB
J15 (P68)
38.0675MHz
WIDTH LOCAL
J13 (P70)
J16 (P67)
47.055MHz
J02 (P120)
SQ IN
SQ OUT
GND
NB VR
NB
NB VR
(P73)
C214-C216
0.01
IF UNIT PB-2390A (No.20xx)

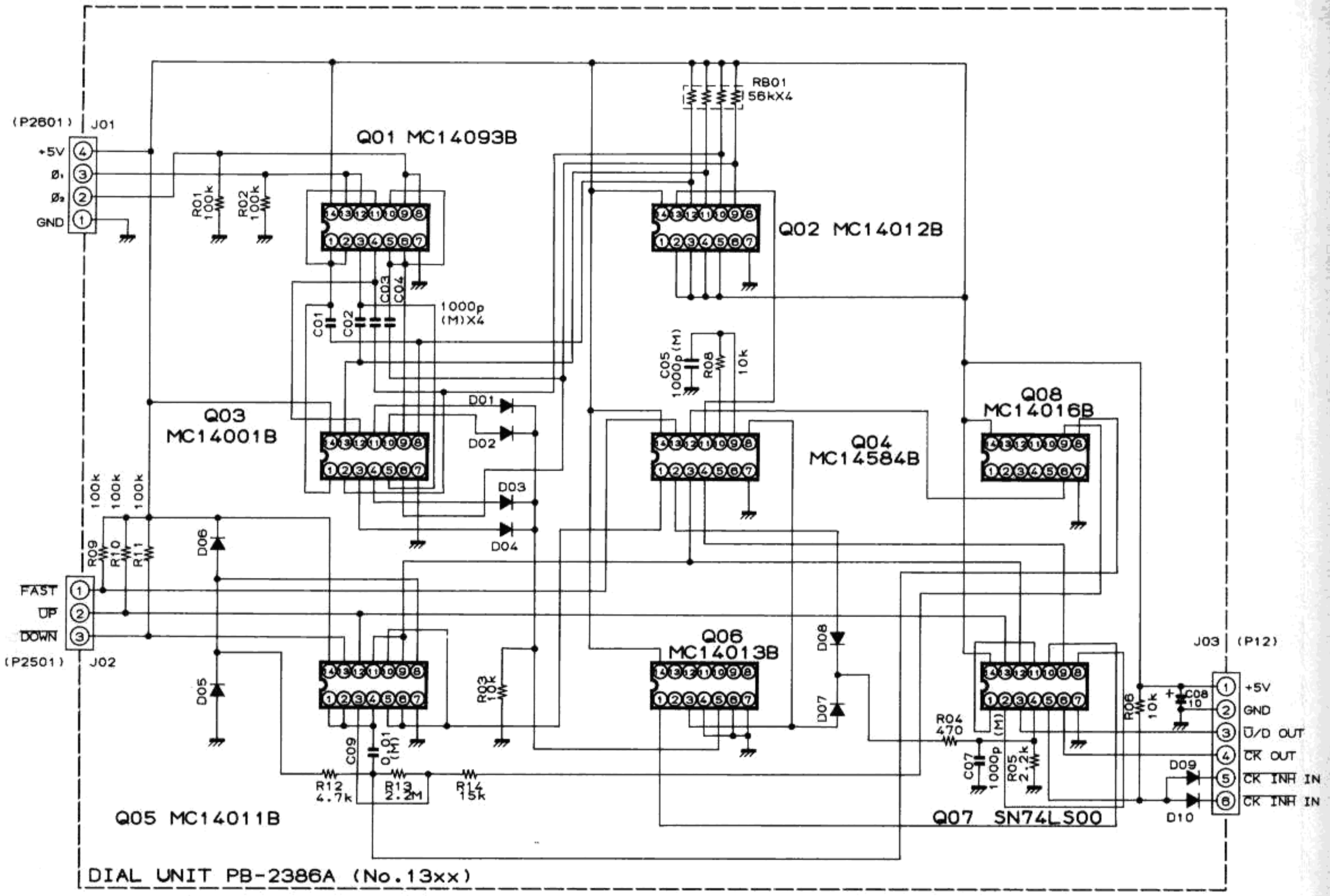

RESISTOR VALUES ARE IN OHMS. 1/4W. CAPACITOR VALUES ARE IN uF. 50wv AND INDUCTOR VALUES ARE IN HENRIES. UNLESS OTHERWISE NOTED
DIODES ARE 1S1555
(M) CAPACITORS ARE POLYESTER FILM TYPE. 50wv

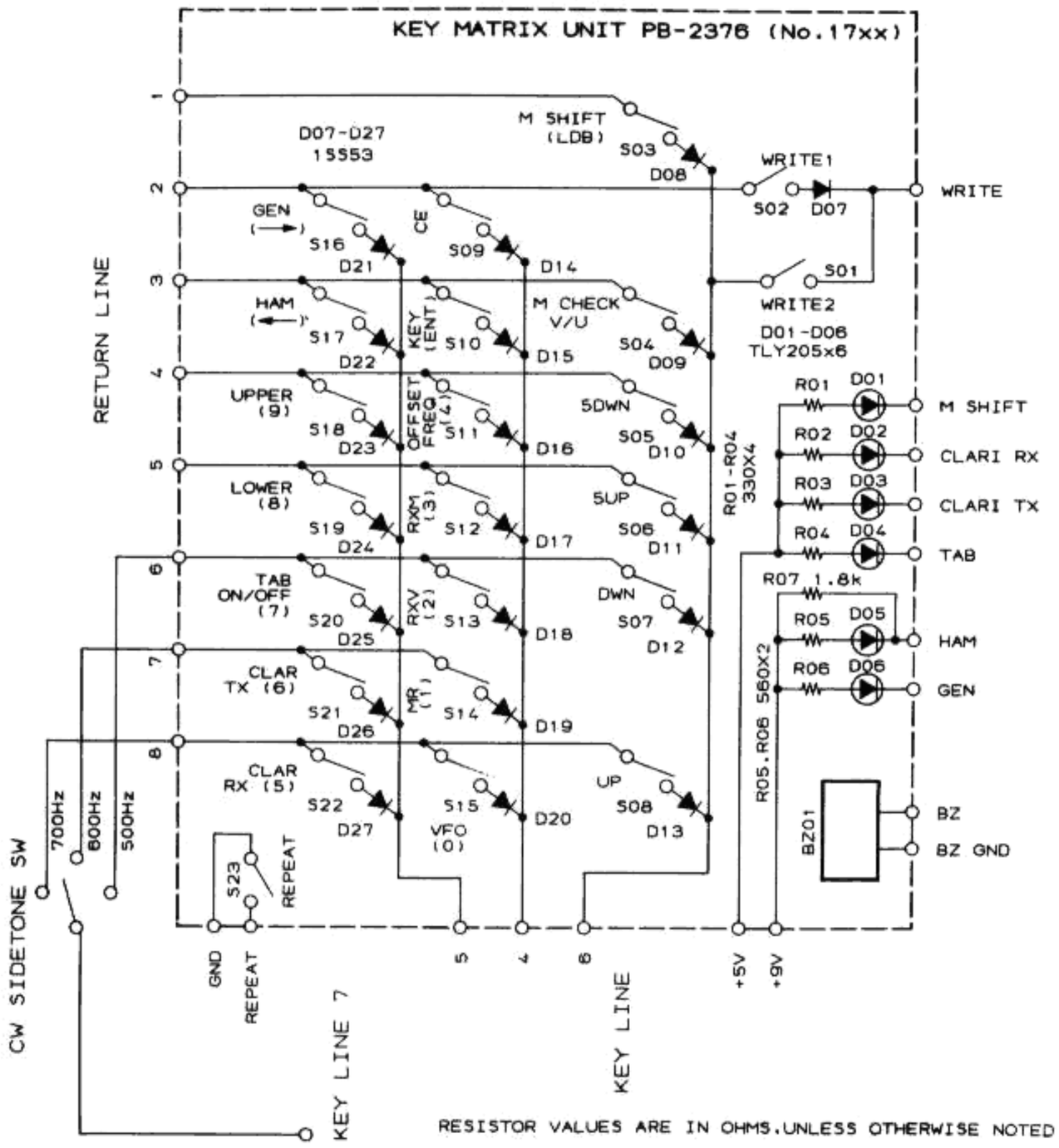

RESISTOR VALUES ARE IN OHMS.UNLESS OTHERWISE NOTED

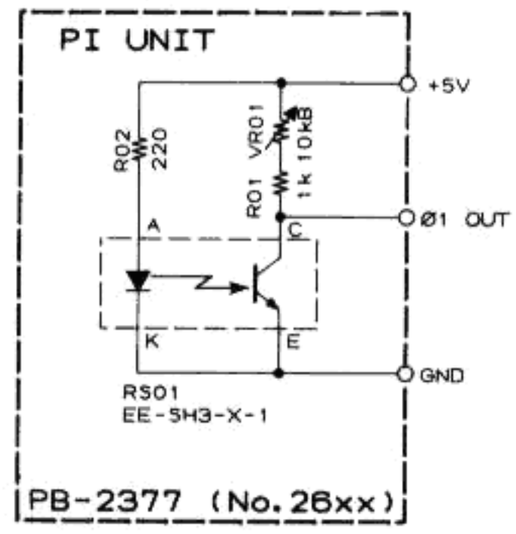

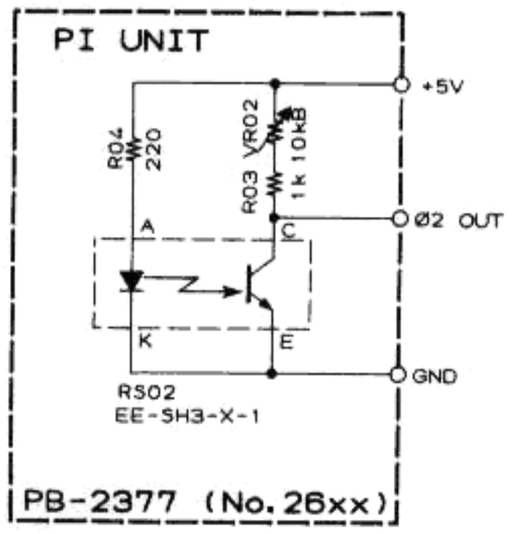

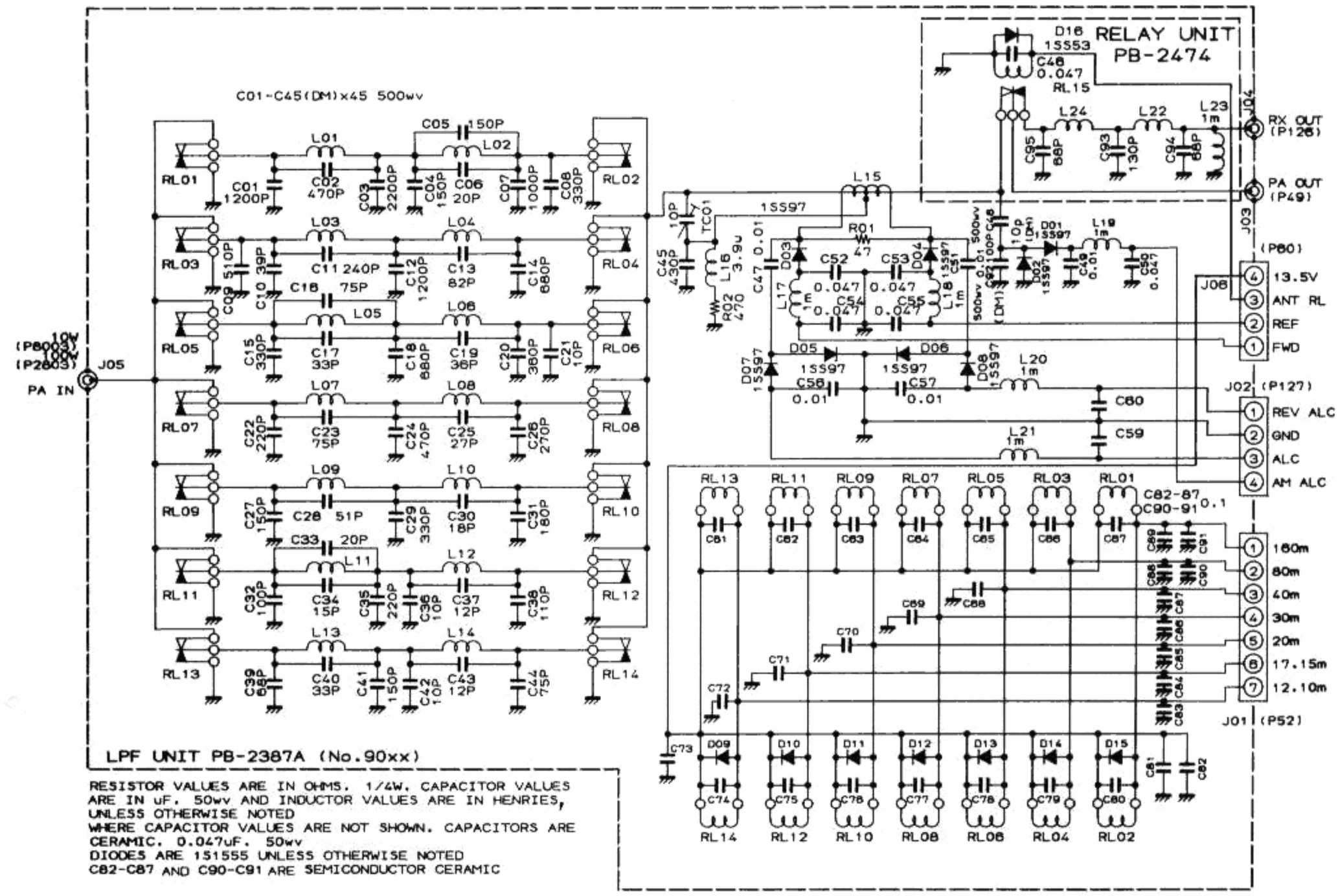

LPF UNIT PB-2387A (No.90xx)

RESISTOR VALUES ARE IN OHMS. 1/4W. CAPACITOR VALUES ARE IN uF. 50wv AND INDUCTOR VALUES ARE IN HENRIES, UNLESS OTHERWISE NOTED
WHERE CAPACITOR VALUES ARE NOT SHOWN. CAPACITORS ARE CERAMIC. 0.047uF. 50wv
DIODES ARE 1S1555 UNLESS OTHERWISE NOTED
C82-C87 AND C90-C91 ARE SEMICONDUCTOR CERAMIC

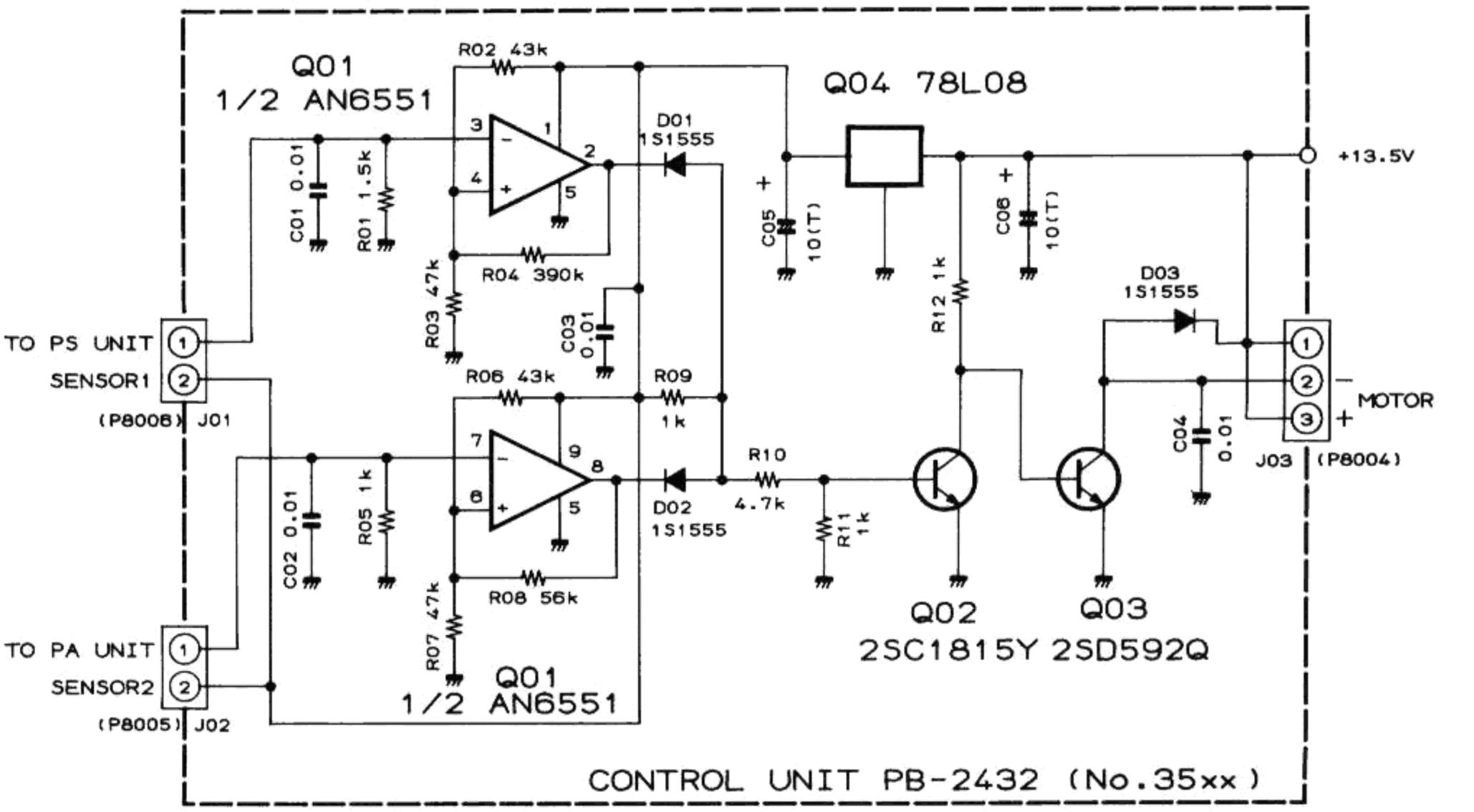

CONTROL UNIT PB-2432 (No.35xx)

RESISTOR VALUES ARE IN OHMS, 1/4W AND CAPACITOR VALUES ARE IN uF. 50wv.
UNLESS OTHERWISE NOTED
(T) CAPACITORS ARE TANTALUM.16wv

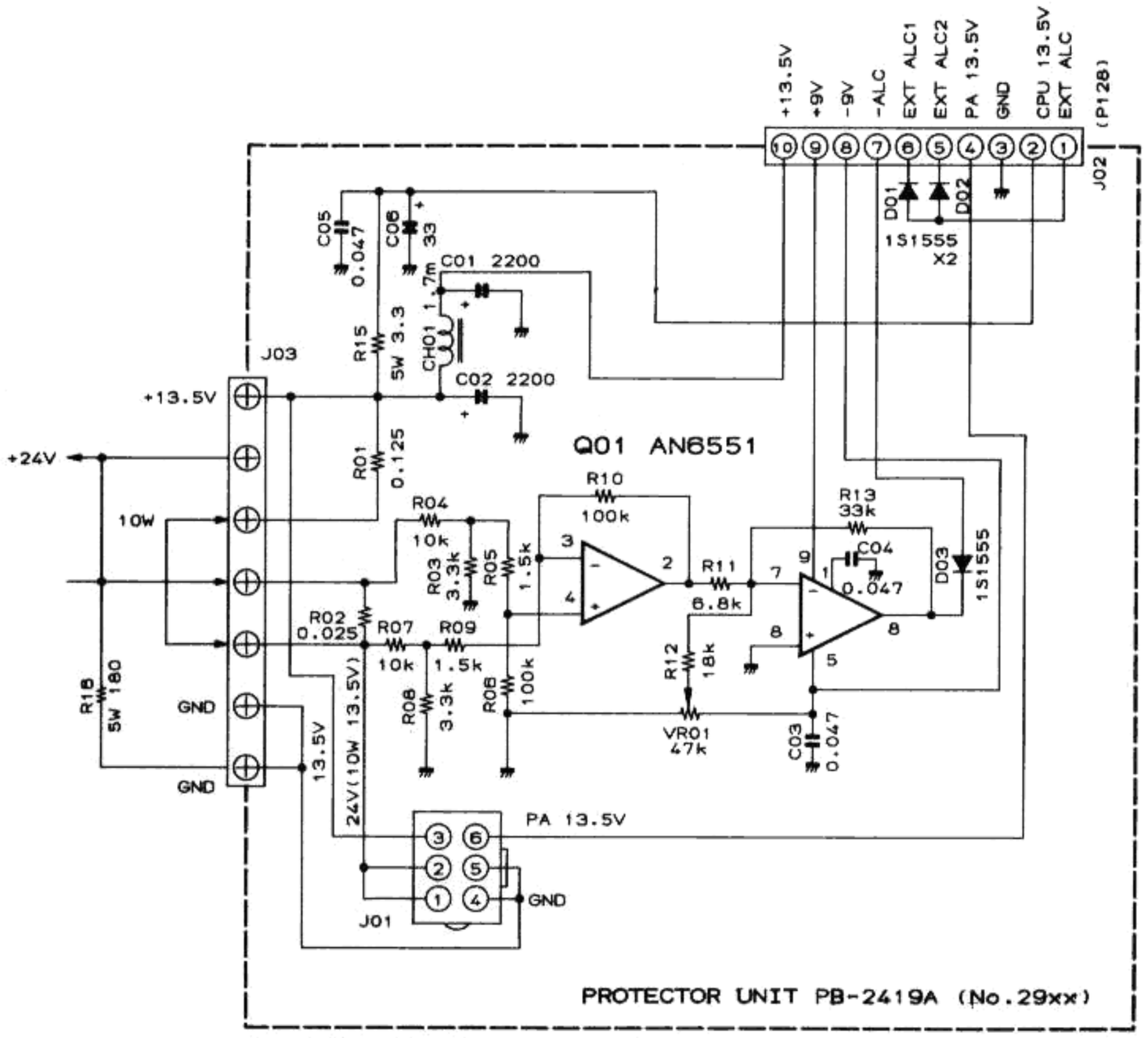

RESISTOR VALUES ARE IN OHMS. 1/4W, CAPACITOR VALUES ARE IN uF. 50wv.AND.
INDUCTOR VALUES ARE IN HENRIES. UNLESS OTHERWISE NOTED

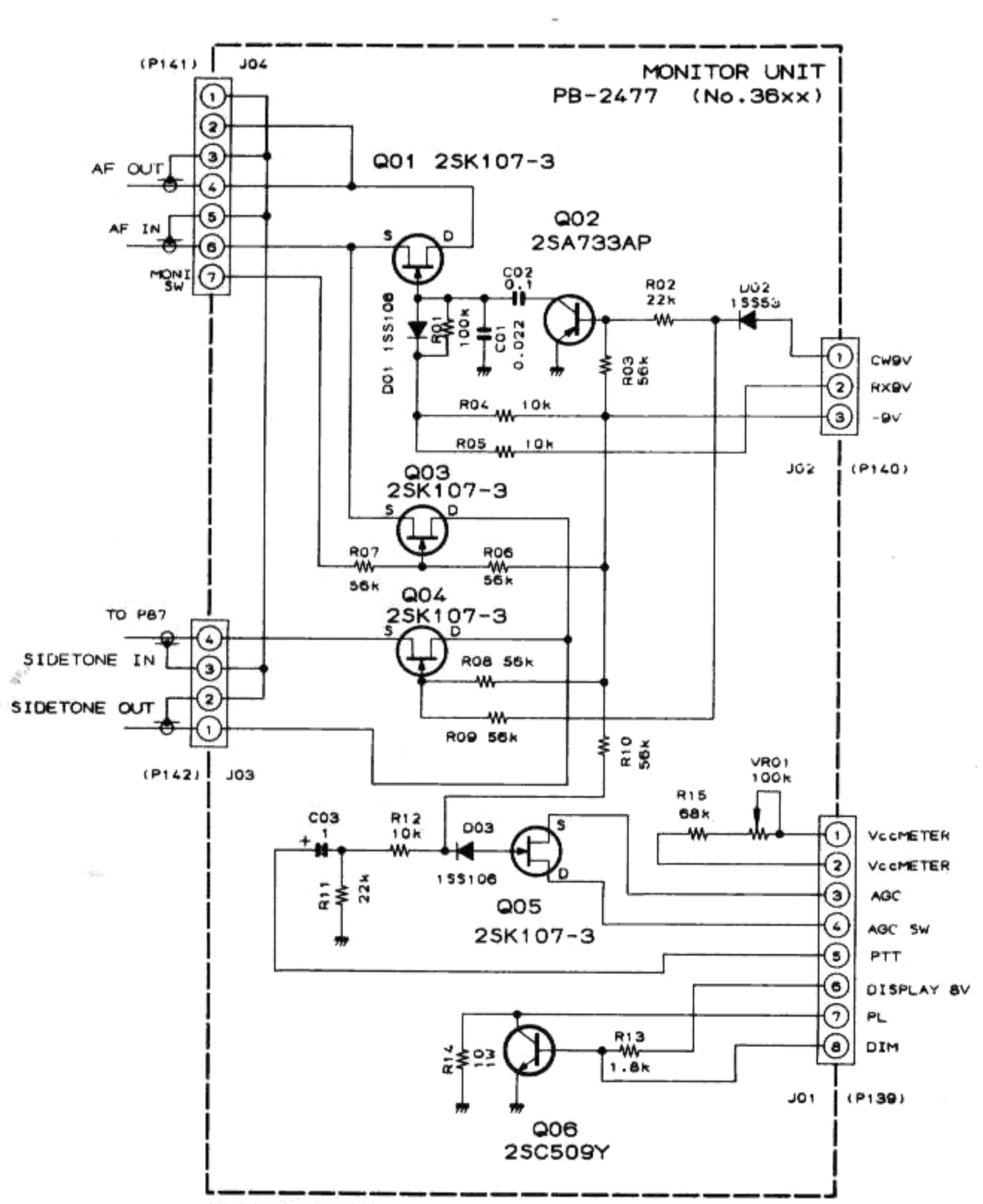

RESISTOR VALUES ARE IN OHMS. 1/4W AND CAPACITOR VALUES
ARE IN uF. 50wv. UNLESS OTHERWISE NOTED

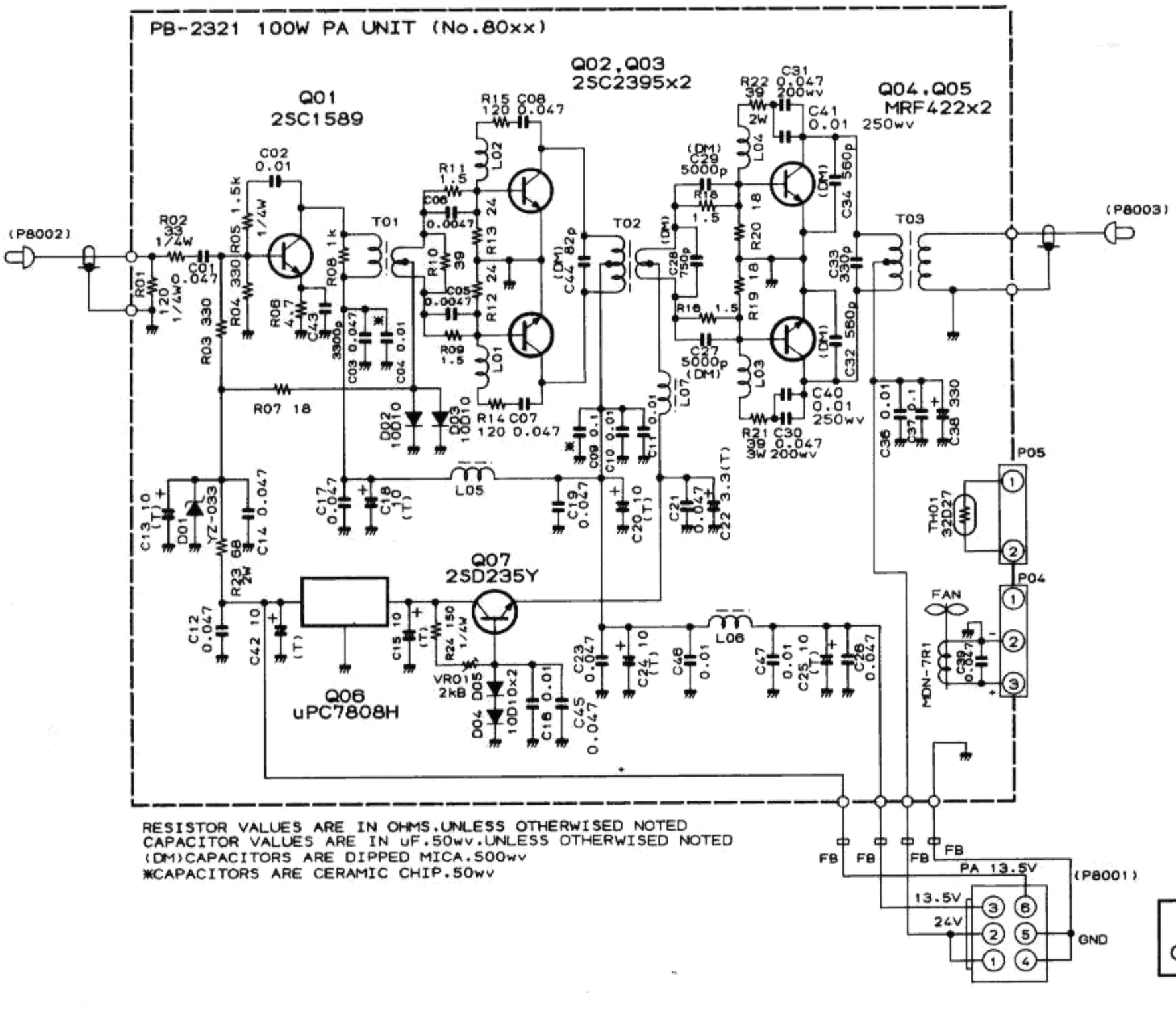

100W PA UNIT
CIRCUIT DIAGRAM

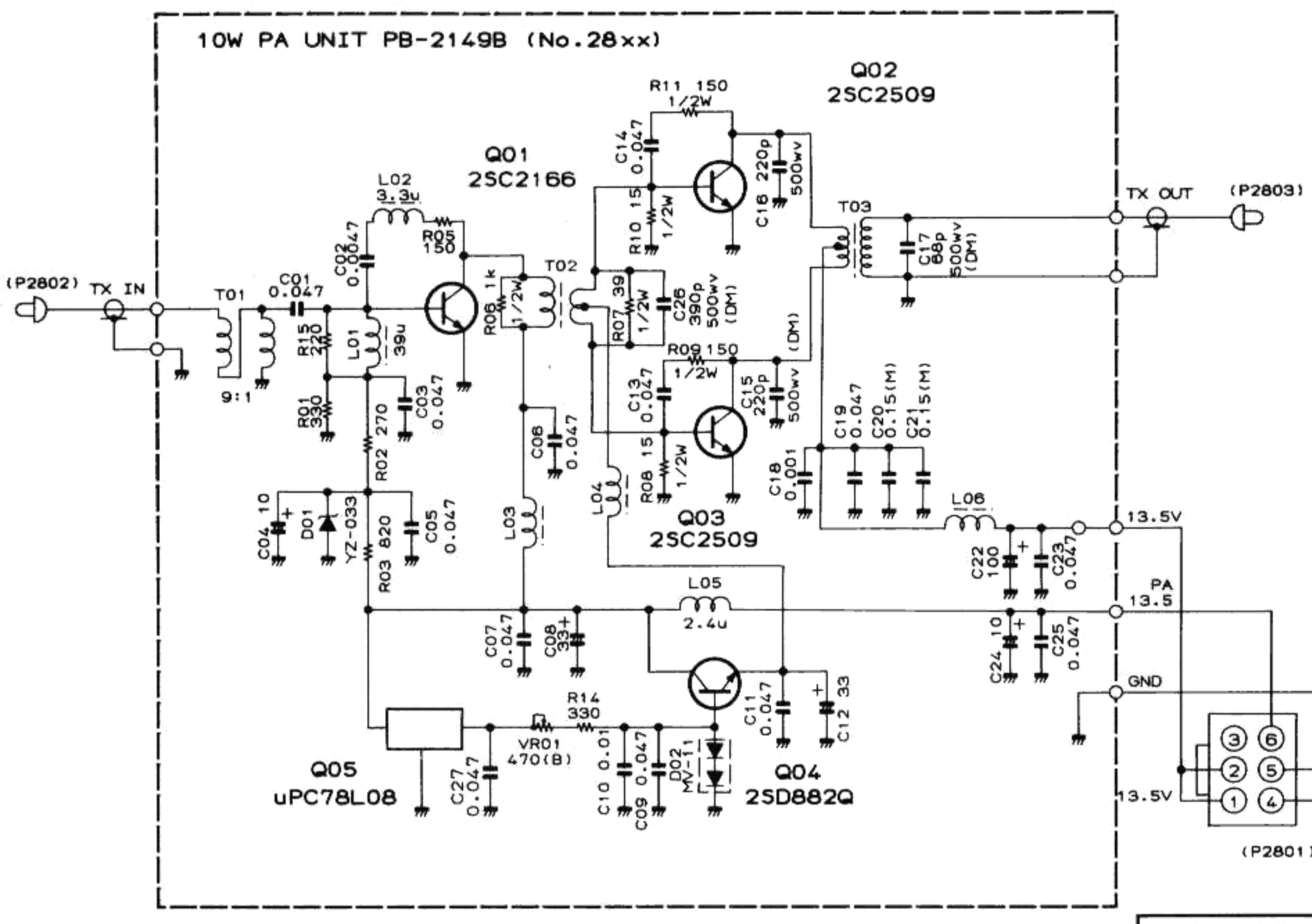

10W PA UNIT
CIRCUIT DIAGRAM

PLL UNIT
PB-2372A
(No.40 ··)

Q01 MPSA13
Q02 2SK19GR
Q03 2SC535A
Q04 TA78L009P
Q05 2SC535A
Q06 HD10551
Q07 2SC535A
Q08 2SC1815 GR
Q09 3SK73GR
Q10 7805
Q11 MB 8718
Q12 2SC380Y
Q13 SN76514N
Q17 2SC380Y
Q21 2SC380Y
Q22 HD10551
Q23 2SC 380Y
Q24 2SC1923R
Q25 2SC535
Q26 2SC380Y
Q27 2SC380Y
Q28 SN76514N
Q29 2SC1923R
Q30 SN76514N
Q31 2SC1815GR

Q14 MB8718
Q15 MC14518
Q16 MC14027
Q18 SN74LS90N
Q19 SN74LS90N
Q20 SN74LS90N

RB01 100kx8
RB02 100kx7

(P42) J10
SHIFT 1
SHIFT 2
SHIFT 3
SHIFT 4
SHIFT 5
SHIFT 6
SHIFT 7
SHIFT 8

(P41) J09
90MHz

(P118) J03
10KHz

(P38) J05
MARKER CONT
E
MARKER

(P33) J11
PD22
PD23
PD24
PD25
PD26
PD27
PD28

(P37)
UNLOCK J04

(P40) J08 BFO
(P30) J07 13,5 V
(P34) J01
VC04
VC03
VC02
VC01

J02 (P35) 38,0675 MHz
J01 (P31) VFO
J06 (P39) 30MHz

TP01
TP02
TP03
TP04

T01
T02
T03
T04
T05
T06 4:1
T07

X01 38,0675

L01 270µ
L02 0,68µ
L03 2,2µ
L04
L05 15µ
L06 15µ
L07 15µ
L08
L09 270µ
L10
L12 12µ
L13 12µ
L14 0,39µ
L15 0,677µ
L16 0,576µ
L17 0,420µ
L19 270µ
L20 270µ
L21 100µ
L23 270µ
L24 2,2µ

TH01 31D26
TC01 3p
D01 1SV55
D02 1N60
D03 1SS53

JP01
JP02
GEN
P1705
J03

VCO UNIT PB-2371A (No.50··)

(P30) 13.5V J07

VC04 VC03 VC02 VC01 (P34) J01

Q04 TA78L009P

Q01 TA78L009P

Q07 2SC535A

Q24 2SC1815GR

Q25 2SC535C

Q02 2SA733AP

Q03 2SK19TM-BL

Q04 2SK19TM-BL

Q05 2SA733AP

Q06 2SA733AP

Q07 2SK19TM-BL

Q08 2SK19TM-BL

Q09 2SA733AP

Q10 2SA733AP

Q11 2SK19TM-BL

Q12 2SK19TM-BL

Q13 2SA733AP

Q14 2SA733AP

Q15 2SK19TM-BL

Q16 2SK19TM-BL

Q17 2SA733AP

Q18 2SA733AP

Q19 2SK19TM-BL

Q20 2SK19TM-BL

Q21 2SA733AP

Q22 3SK73GR

Q23 3SK73GR

Q19 SN74LS90N

Q20 SN74LS90N

Q30 SN76514N

Q25 SN74LS145

7805

CH1 CH2 CH3 CH4 CH5 CH6 CH7 CH8 CH9 CH10

D01 D02 D03 D04 D05 D06 D07 D08 D09 D10 D11 D12 D13 D14 D15 D16 D17 D18 D19 D20

ISV-55 ISS53

T01 T02 T03 T04 T05 T06 T07 T08 T09 T10

TH01 D22A

TP01 TP02

JP01 JP02

J03 J06 J02

P1705 GEN

30MHz

NOTE

CAPACITOR VALUES ARE IN μF, 50wv;
RESISTOR VALUES ARE IN Ω, 1/4W;
AND INDUCTOR VALUES IN HENRIES
UNLESS OTHERWISE NOTED.

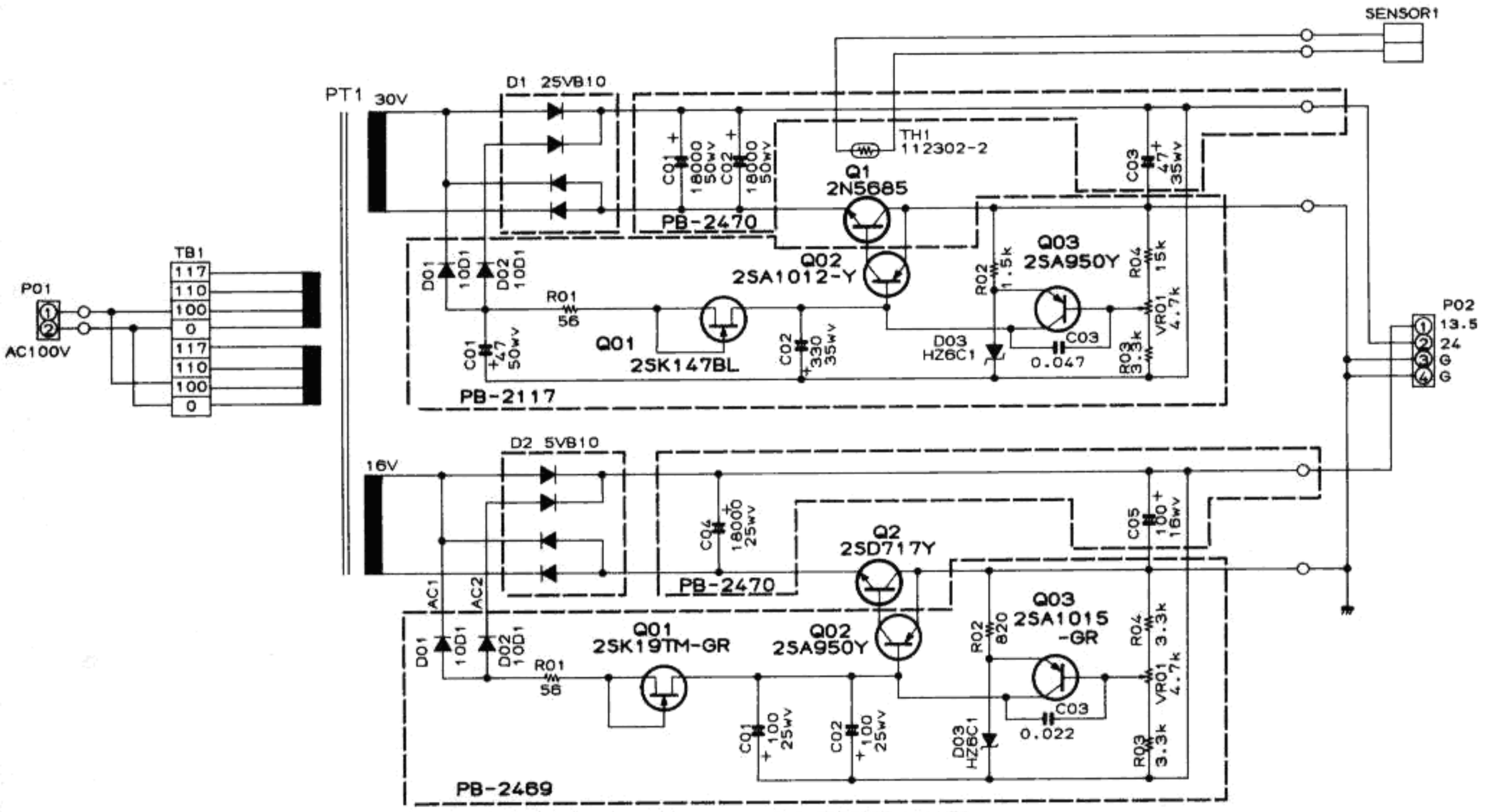

RESISTOR VALUES ARE IN OHMS.1/4W.AND CAPACITOR VALUES
ARE IN uF.50wv.AND INDUCTOR VALUES ARE IN HENRIES
UNLESS OTHERWISE NOTED

100W PS UNIT

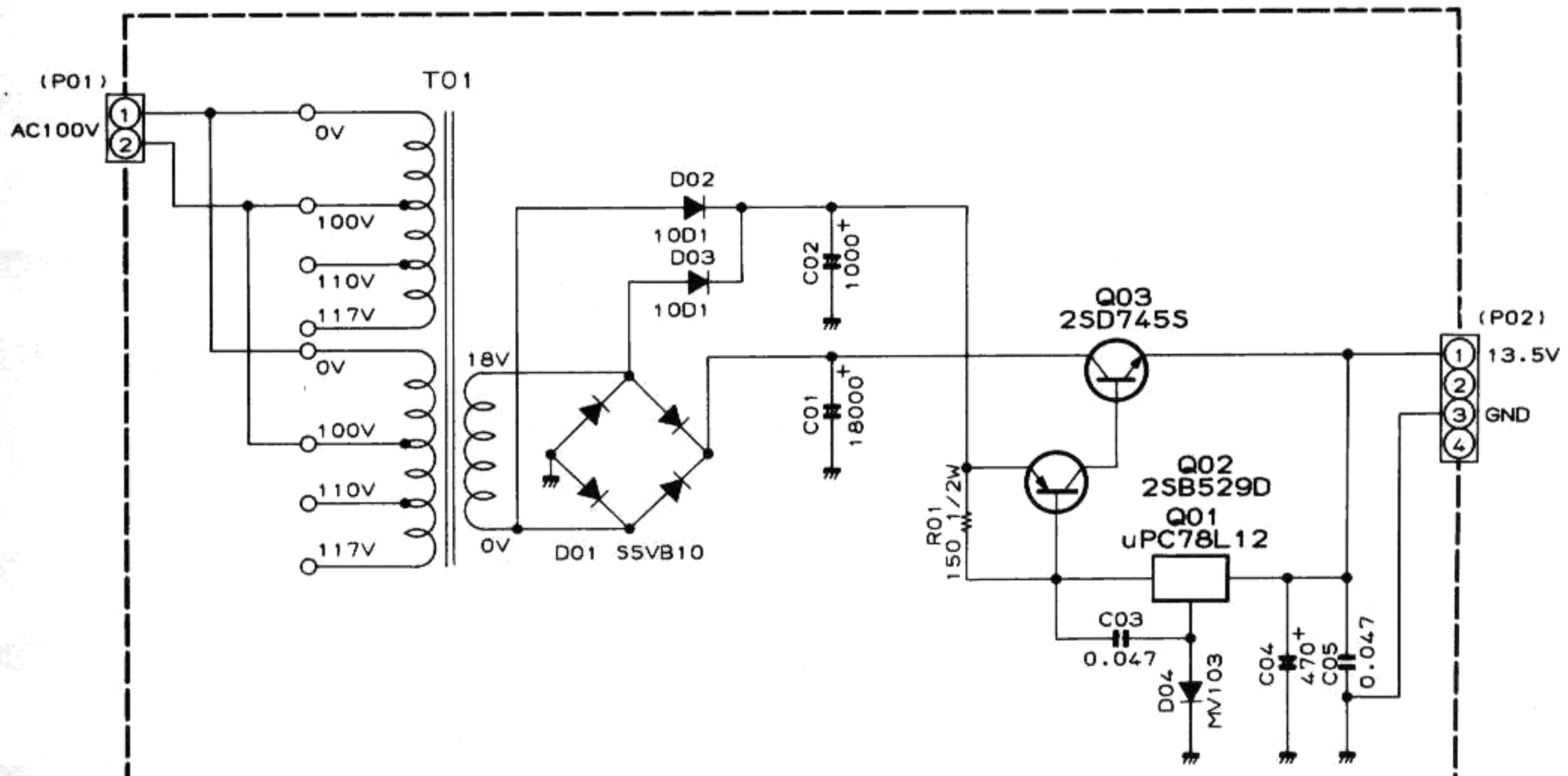

RESISTOR VALUES ARE IN OHMS AND CAPACITOR VALUES ARE IN uF. 50wv.
UNLESS OTHERWISE NOTED

10W PS UNIT

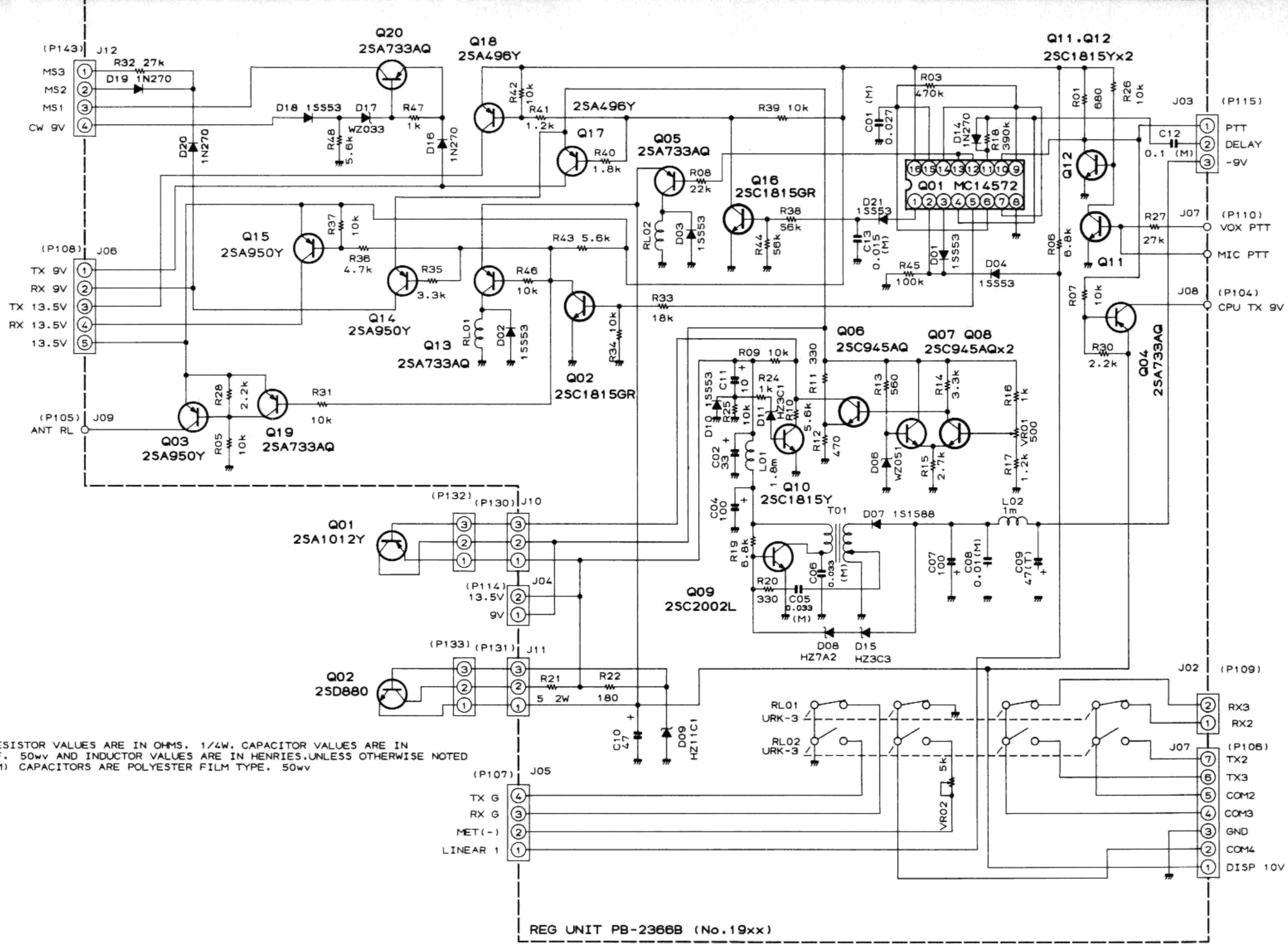

RESISTOR VALUES ARE IN OHMS, 1/4W. CAPACITOR VALUES ARE IN uF. 50wv AND INDUCTOR VALUES ARE IN HENRIES. UNLESS OTHERWISE NOTED (M) CAPACITORS ARE POLYESTER FILM TYPE. 50wv

RF UNIT PB-2389A (No.10xx)

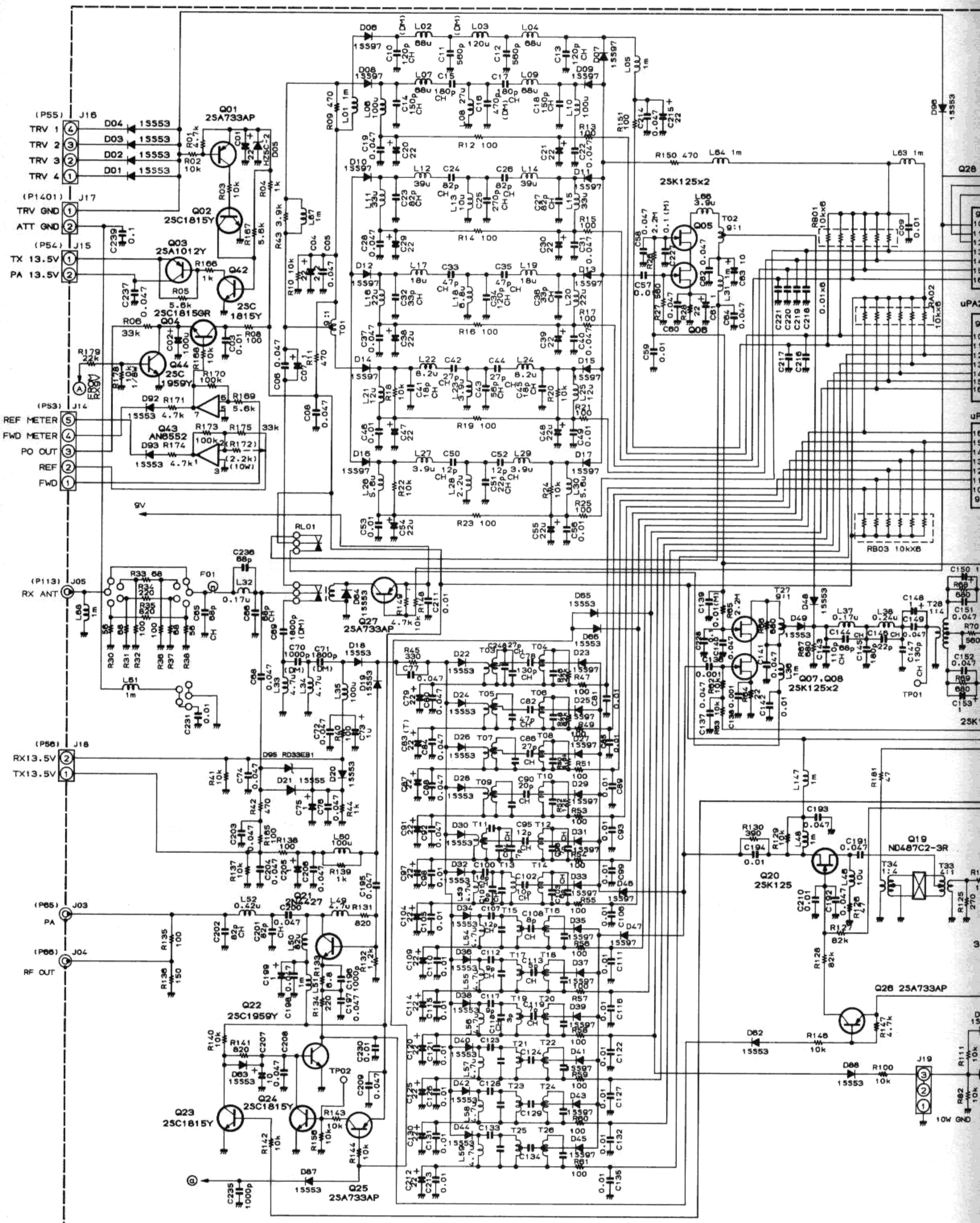
(P55) J16
TRV 1
TRV 2
TRV 3
TRV 4
D04 1SS53
D03 1SS53
D02 1SS53
D01 1SS53
(P1401) J17
TRV GND
ATT GND
(P54) J15
TX 13.5V
PA 13.5V
Q01 2SA733AP
Q02 2SC1815Y
Q03 2SA1012Y
Q42 2SC 1815Y
Q04 2SC1815GR
Q44 2SC 1959Y
Q43 AN8552
(P53) J14
REF METER
FWD METER
PO OUT
REF
FWD
9V
RL01
(P113) J05
RX ANT
(P56) J18
RX13.5V
TX13.5V
(P65) J03
PA
(P66) J04
RF OUT
Q21 2SA1427
Q22 2SC1959Y
Q23 2SC1815Y
Q24 2SC1815Y
Q25 2SA733AP
Q27 2SA733AP
2SK125x2
T01
T02 9:1
Q05
Q06
RB01 10kx6
RB03 10kx6
RA02 10kx6
Q07.Q08 2SK125x2
T27 9:1
T28 1:4
TP01
Q19 ND487C2-3R
Q20 2SK125
T34 1:4
T33 4:1
Q26 2SA733AP
J19
10W GND
TP02

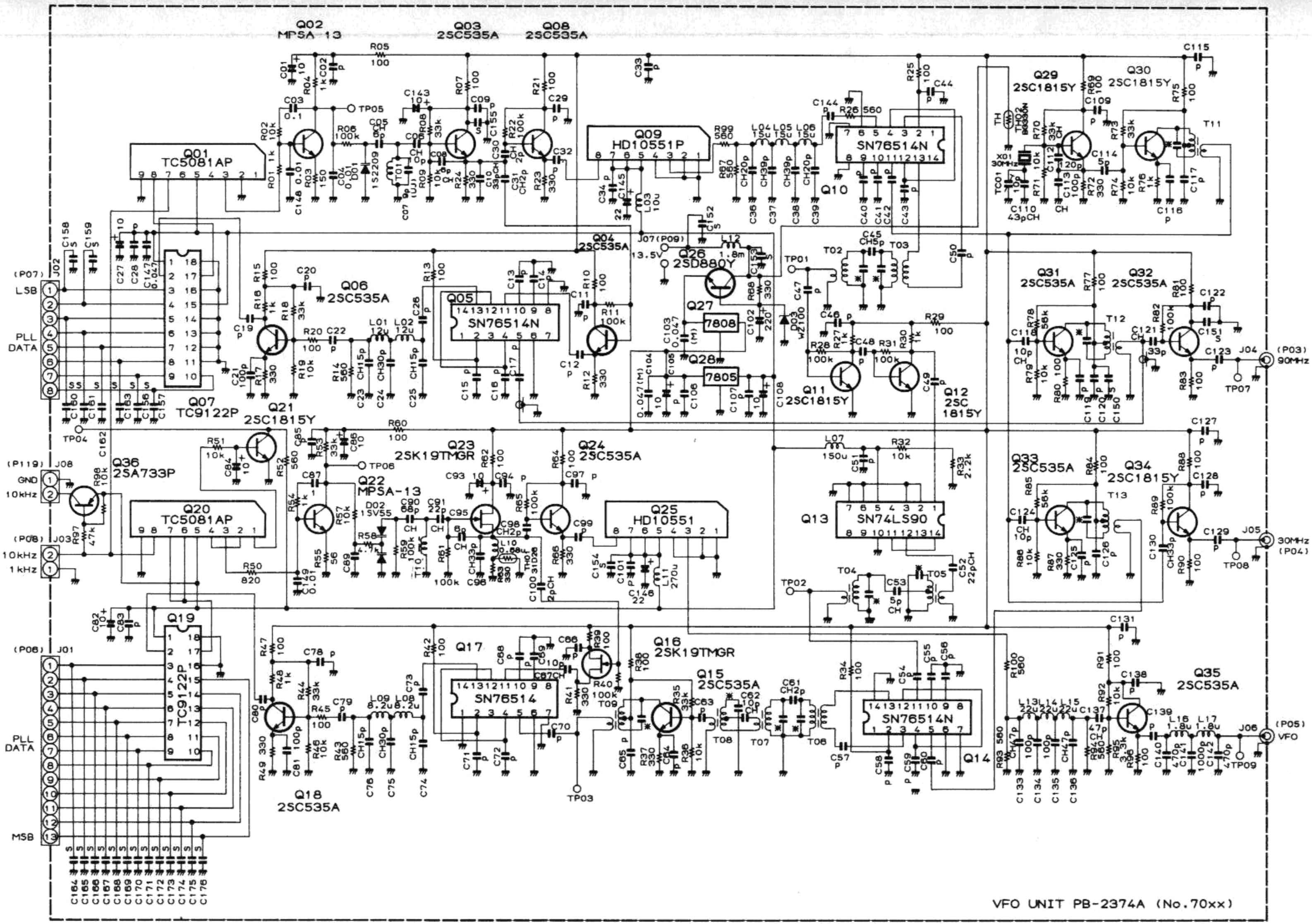

RESISTOR VALUES ARE IN OHMS.1/4W.AND CAPACITOR VALUES ARE uF.50wv.AND
INDUCTOR VALUES ARE IN HENRIES. UNLESS OTHERWISE NOTED
(p)CAPACITORS ARE 0.01uF.50wv
(S)CAPACITORS ARE 0.001uF.50wv
CAPACITORS WISE ✱ ARE INCRIDING THE COIL

PLL/VCO UNIT

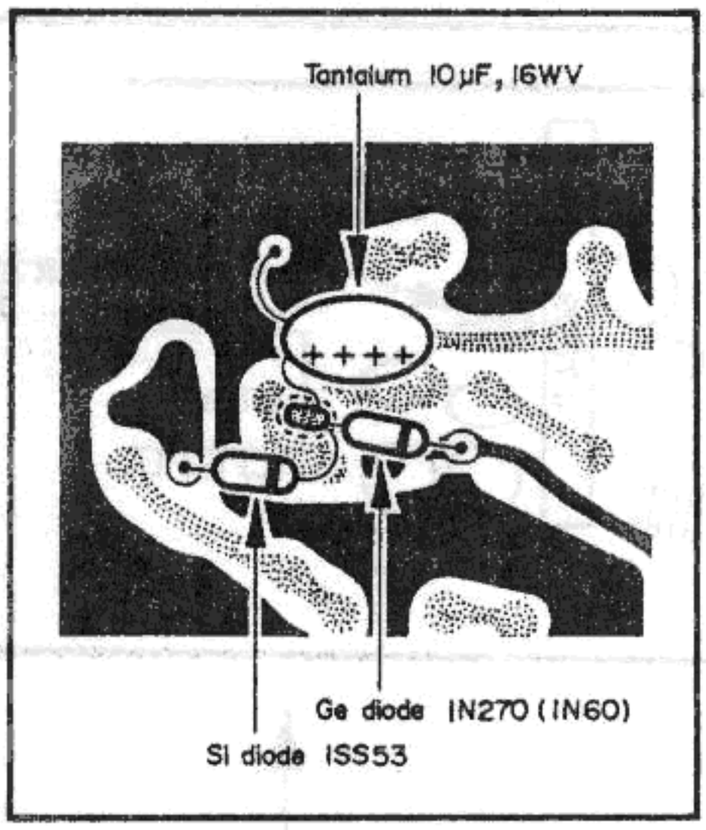

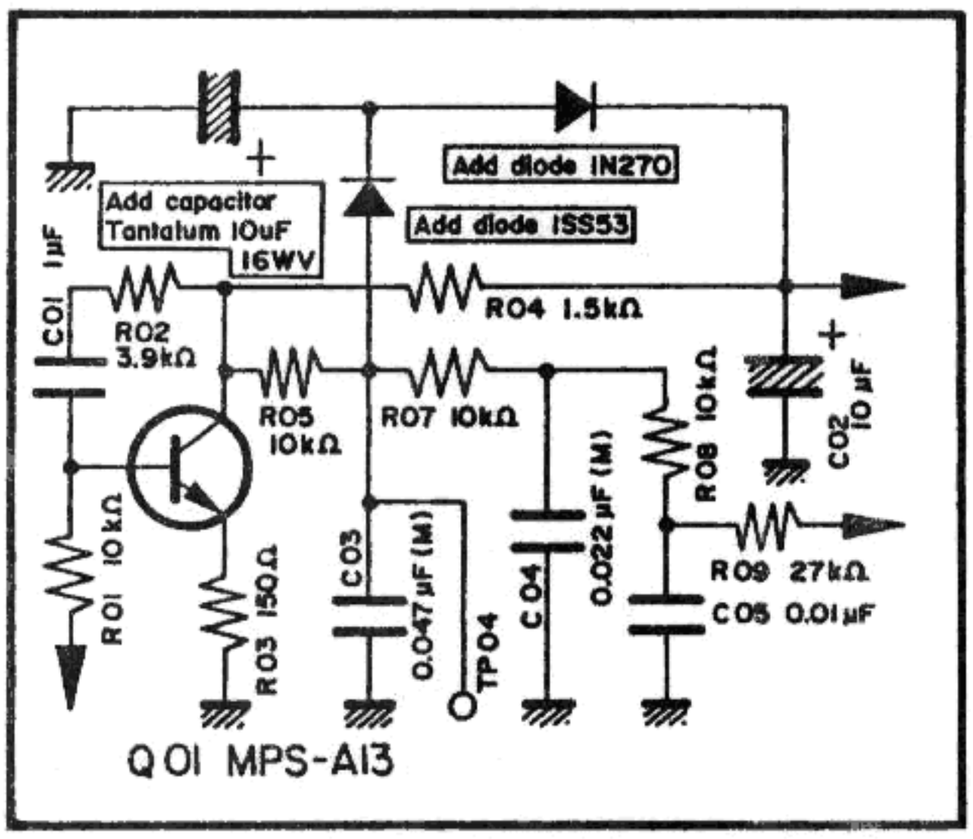

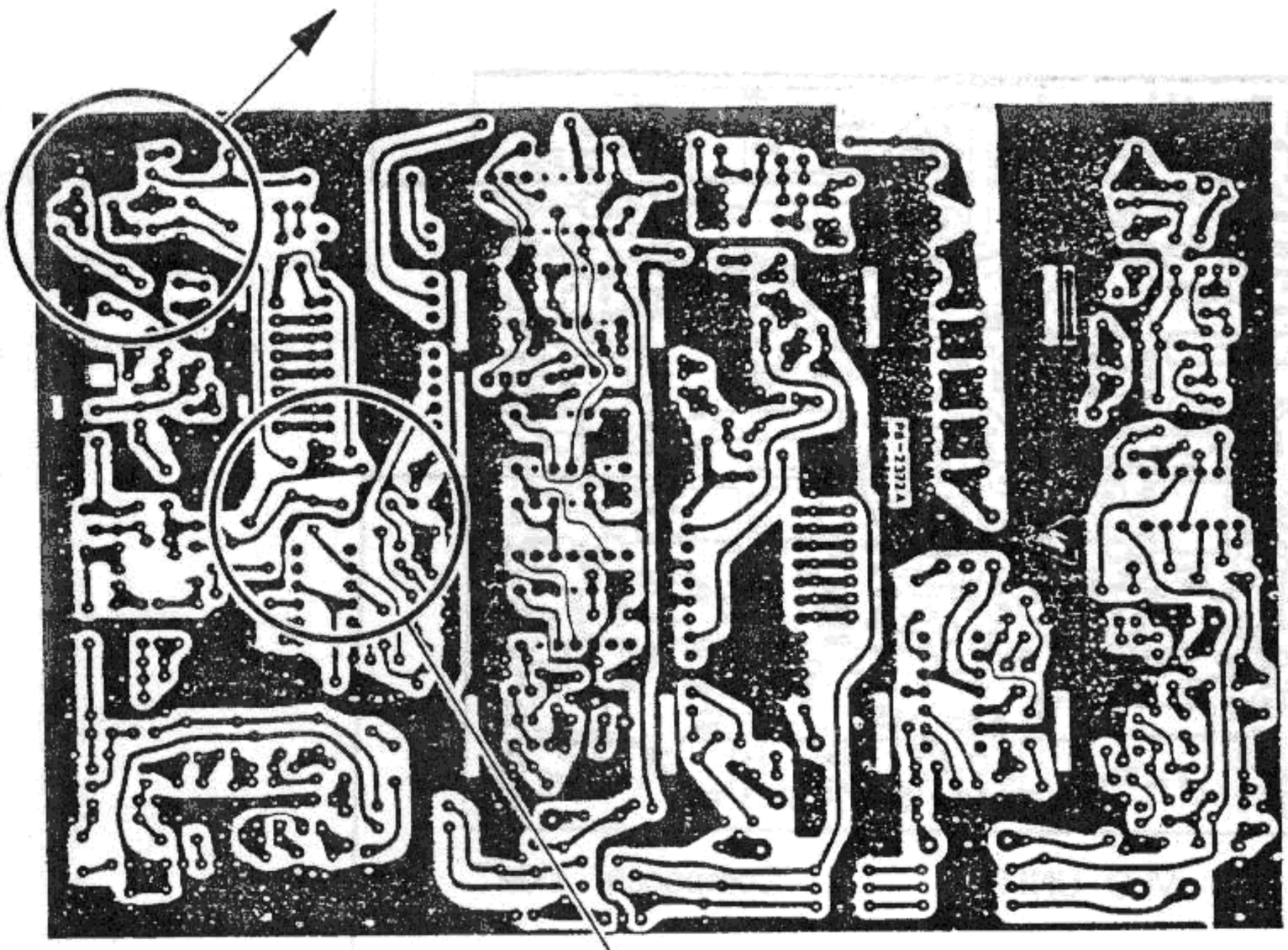

PLL/VCO UNIT Solder side

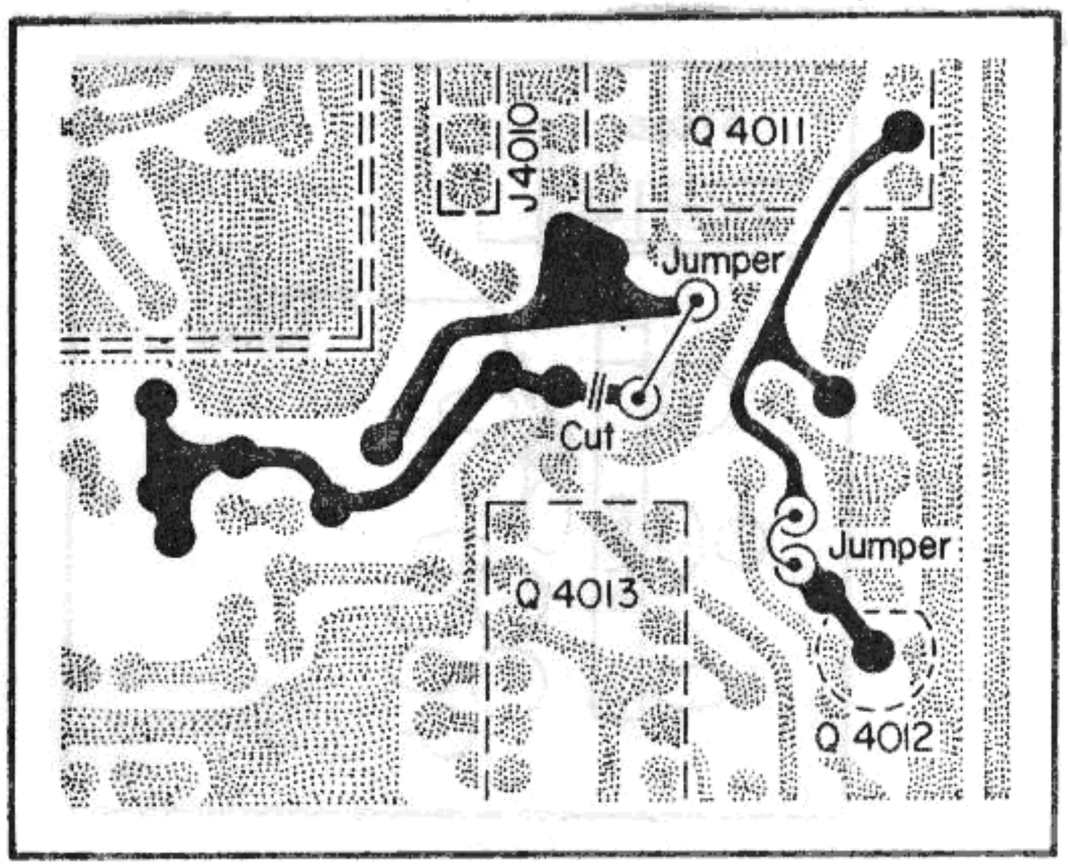

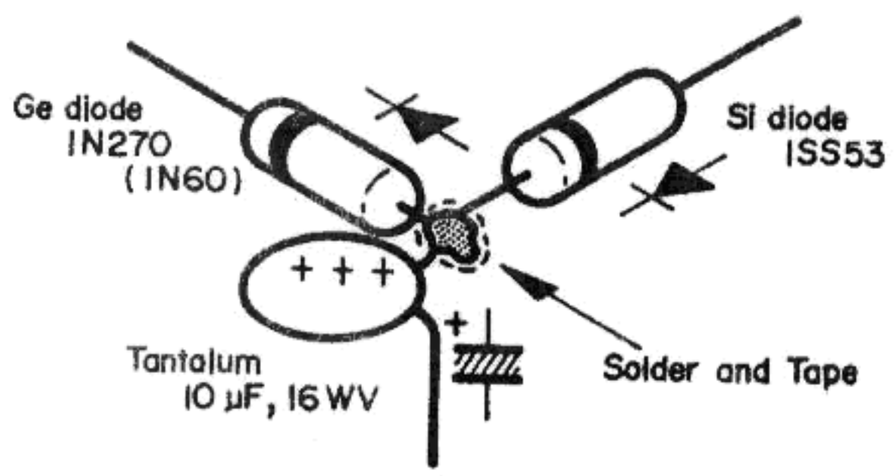

PLL/VCO UNIT

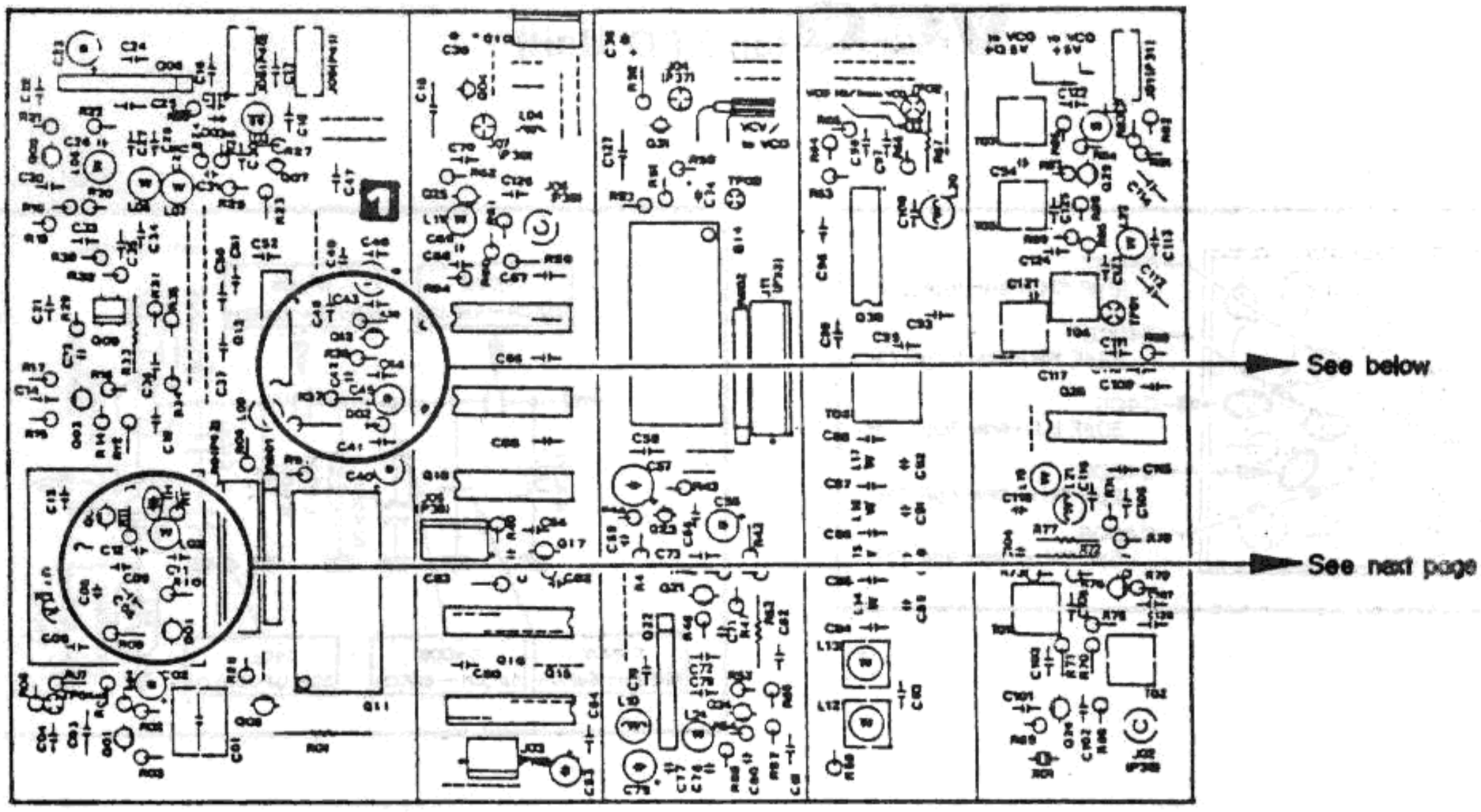

PLL/VCO UNIT Component side

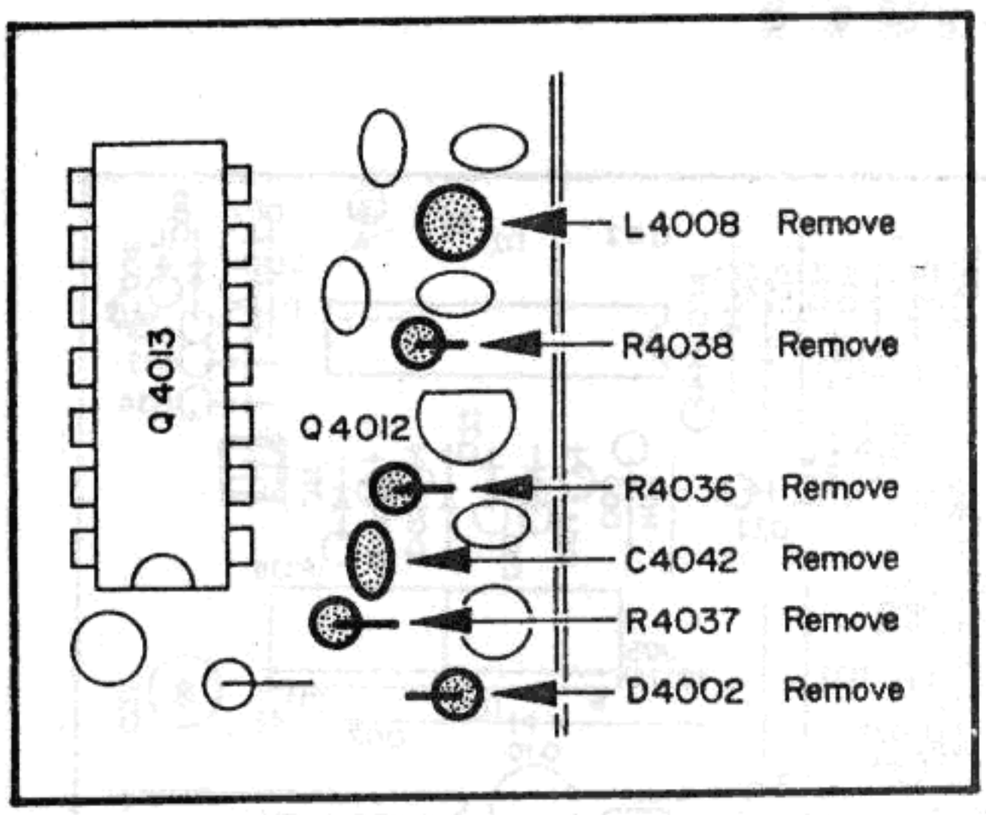

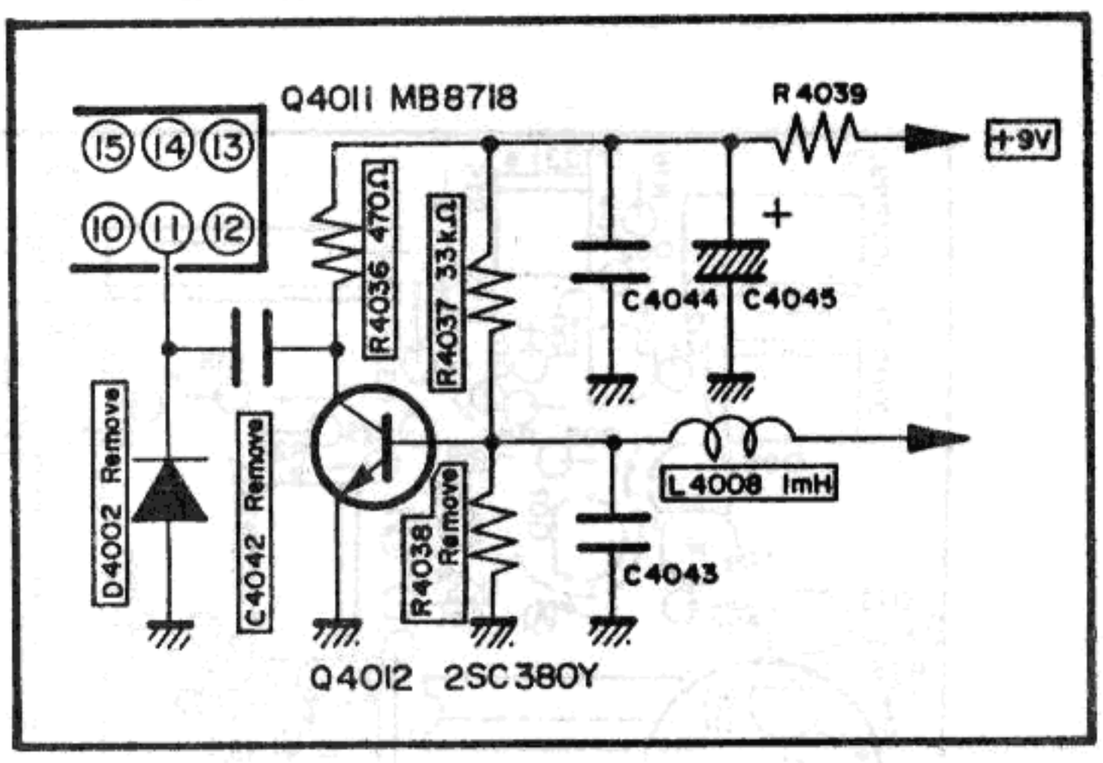

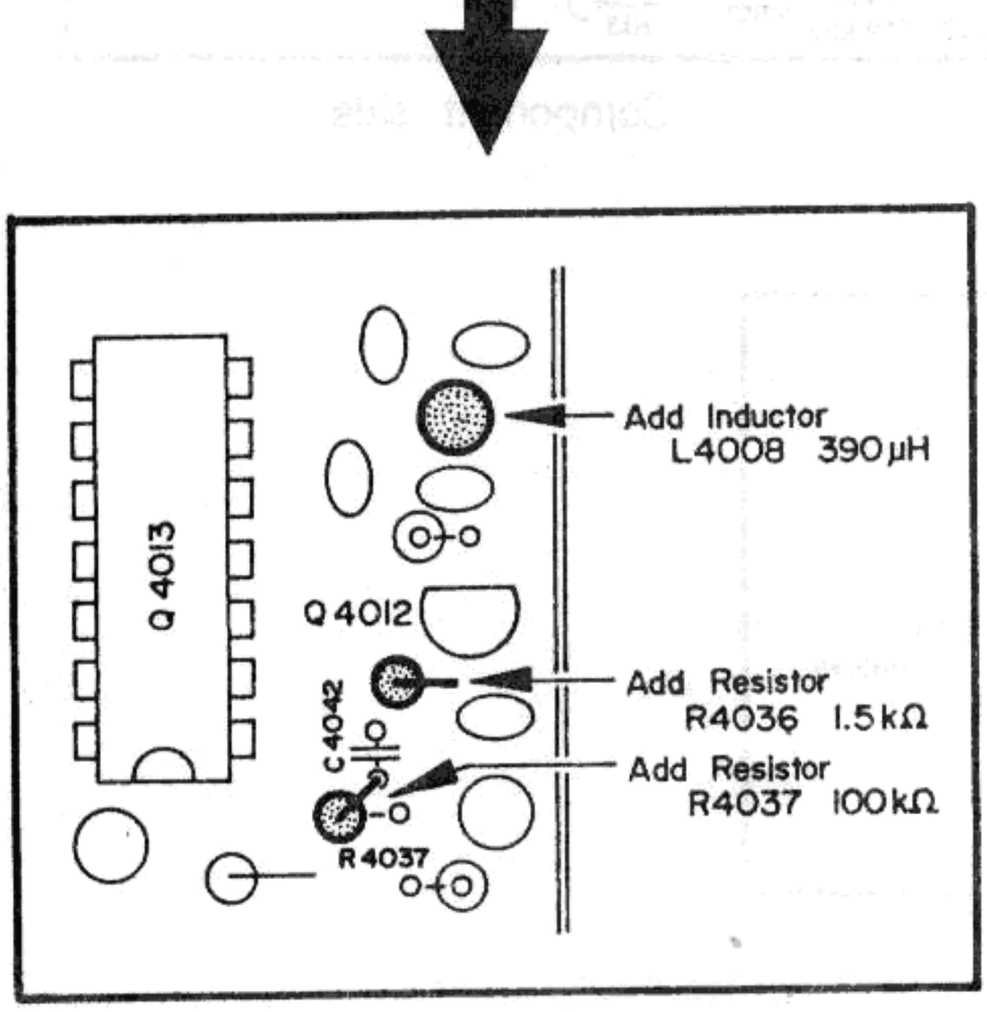

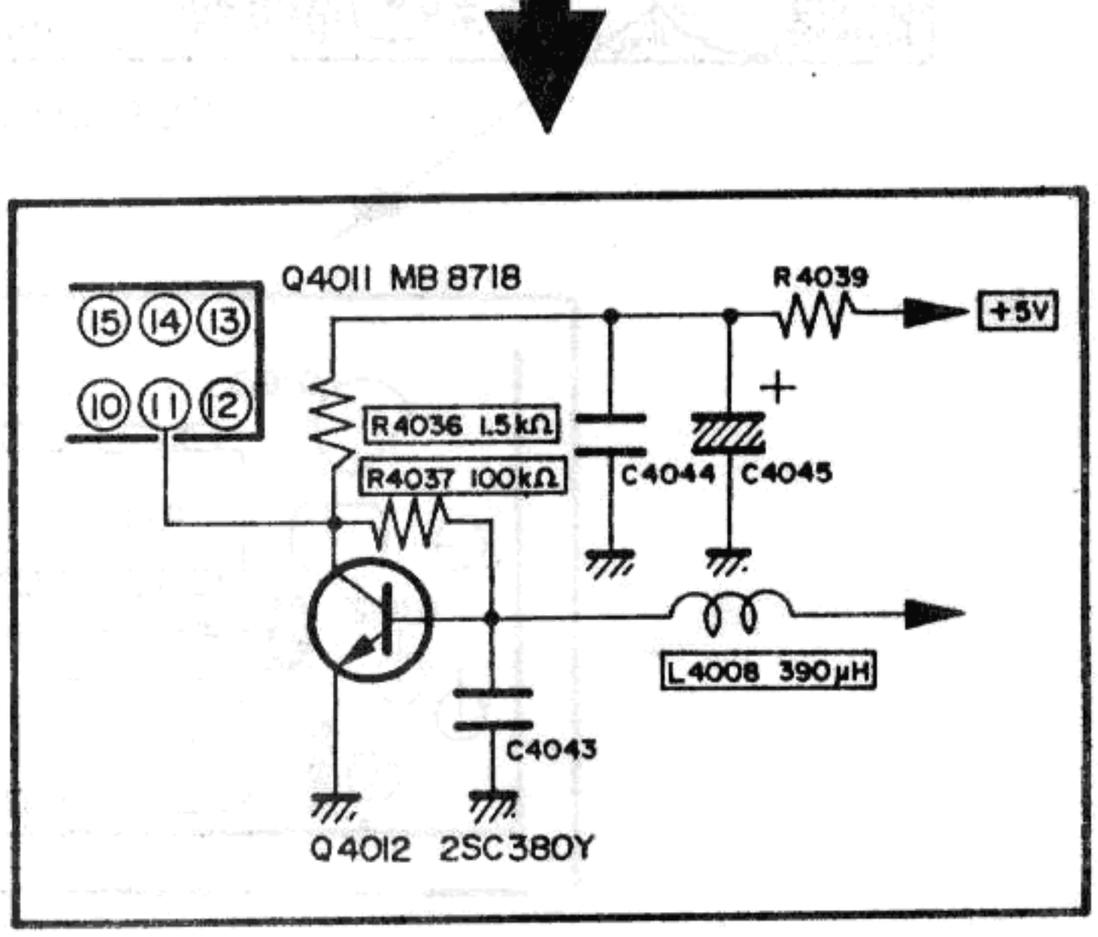

VCO (on VFO Unit)

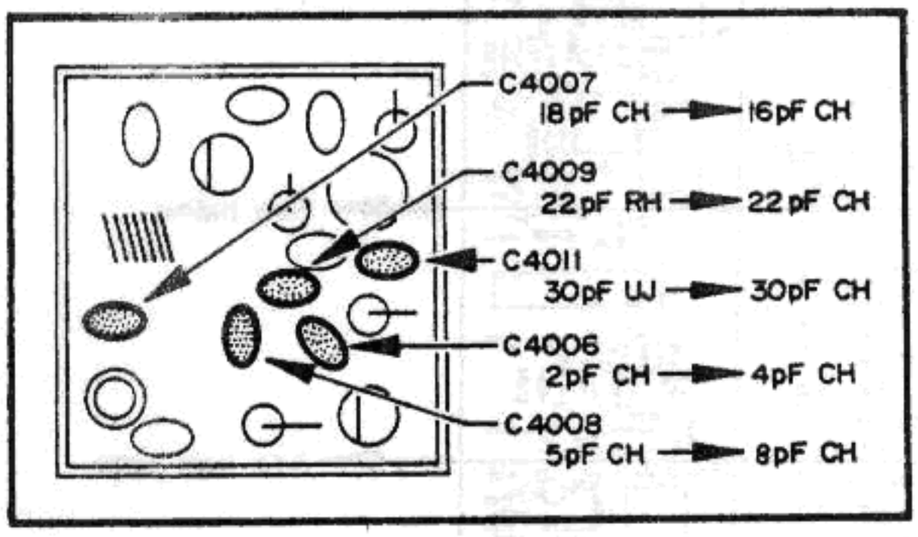

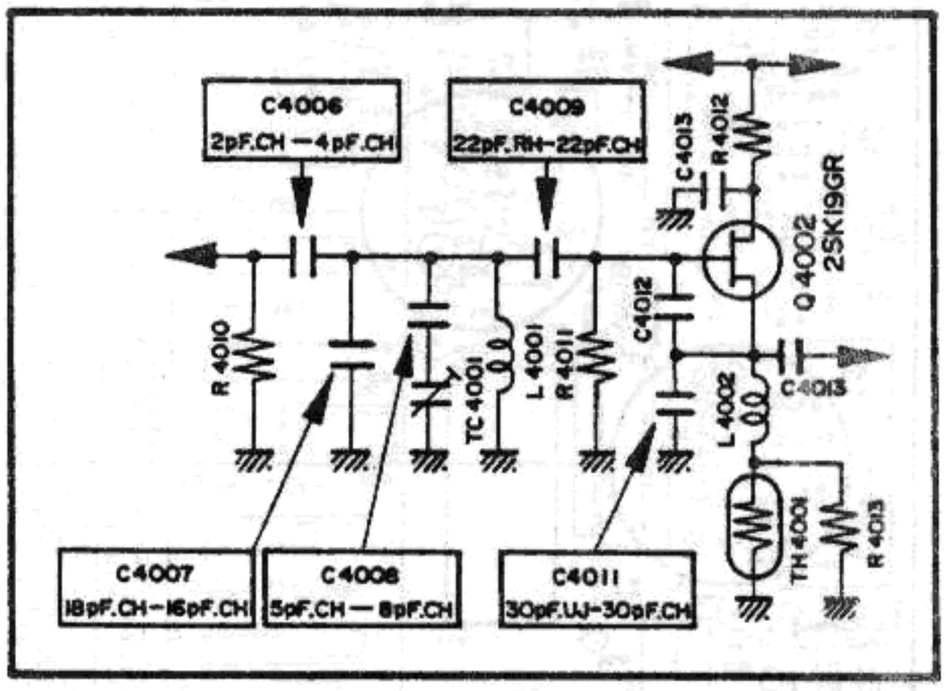

FSK UNIT

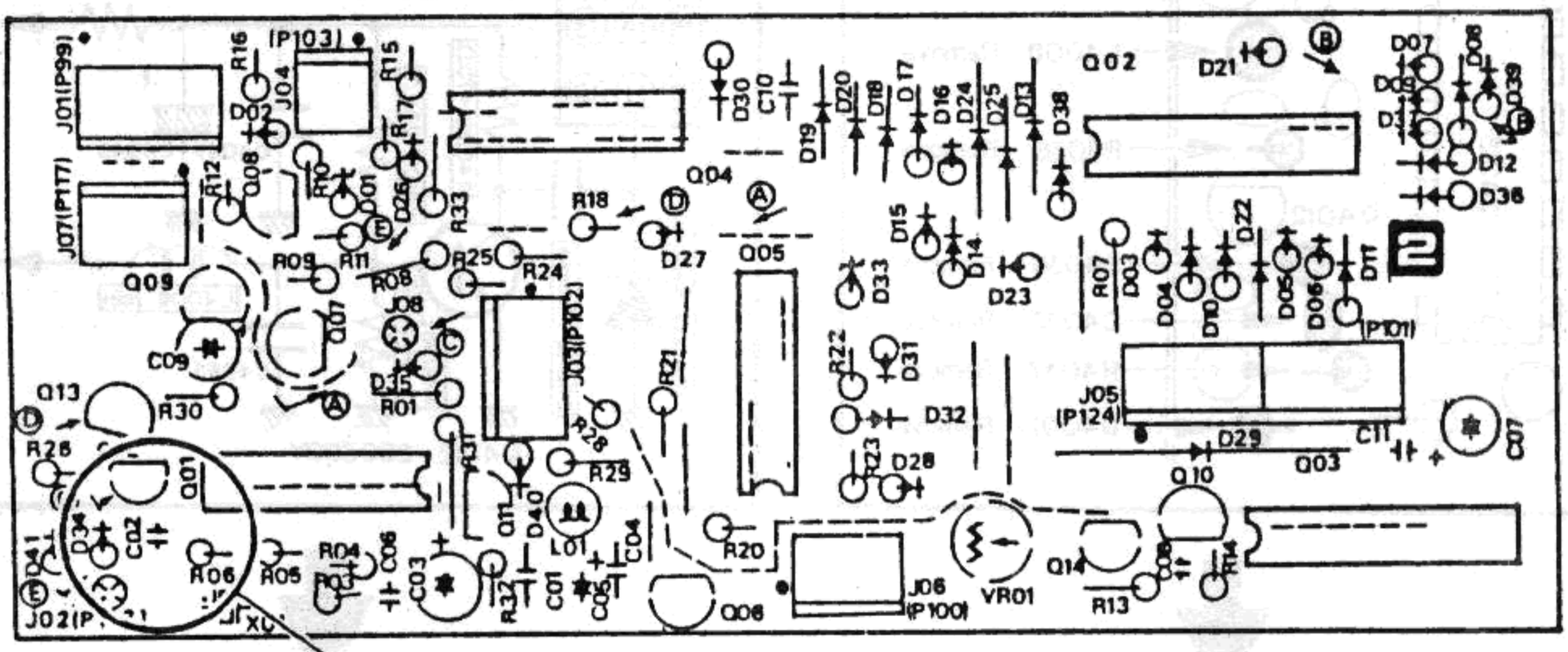

FSK UNIT Component side

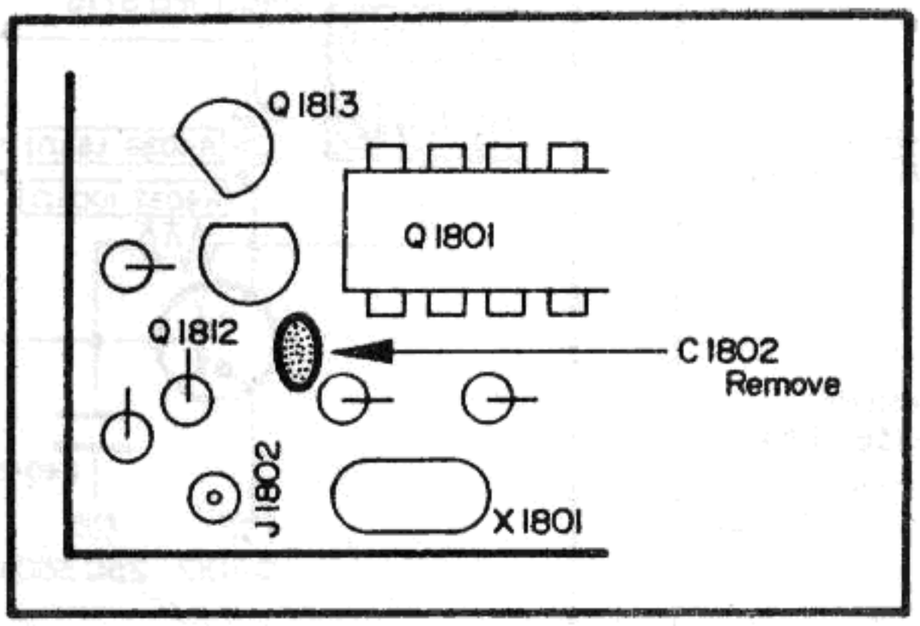

ERRATA FOR THE FT-980 TECHNICAL SUPPLEMENT

The following corrections apply to the first printing of the FT-980 technical supplement

RF Unit (page 8)

Add type 1SS53 (general purpose silicon) diode D_{1096} between the common anodes of the diodes connected to J_{1016} and pin 10 of Q_{1028}. The cathode of the new diode connects to Q_{1028}. Install on the solder side of the board, and use plastic insulating sleeves on each lead of the diode.

VFO Unit (page 9)

Remove resistors R_{7067} and R_{7093}.

PLL/VCO Unit (pages 10–12)

On the solder side of the board, cut the indicated track on the copper pattern in the area between Q_{4011} and Q_{4013}, and install the two jumpers as indicated in the figures on page 10.

Referring to page 11, remove resistors R_{4036}, R_{4037} and R_{4038}, capacitor C_{4042}, and diode D_{4002} and inductor L_{4008}. Replace R_{4036} with 1.5 kilohms in the same location as the original part. Replace R_{4037} with 100 kilohms, but install one lead in the hole originally used for the nearest lead of C_{4042} (removed), as illustrated. Replace L_{4008} with 390 μH in the same location.

In the VCO enclosure on the PLL/VCO Unit (page 12), remove capacitors C_{4009} and C_{4011}, and replace both with the same value CH-type (instead of RH and UJ, removed). Make sure that these have not already been changed before removing: the CH types have black paint on the top, or are marked "CH". Also in the same area, replace C_{4006} with 4 pF CH, C_{4007} with 16 pF CH, and C_{4008} with 8 pF CH.

Add a silicon diode, a germanium diode and a 10 μF, 16 WV tantalum capacitor on the solder side as indicated in the Figures on page 10.

FSK Unit

Remove capacitor C_{1802}, shown on page 12.

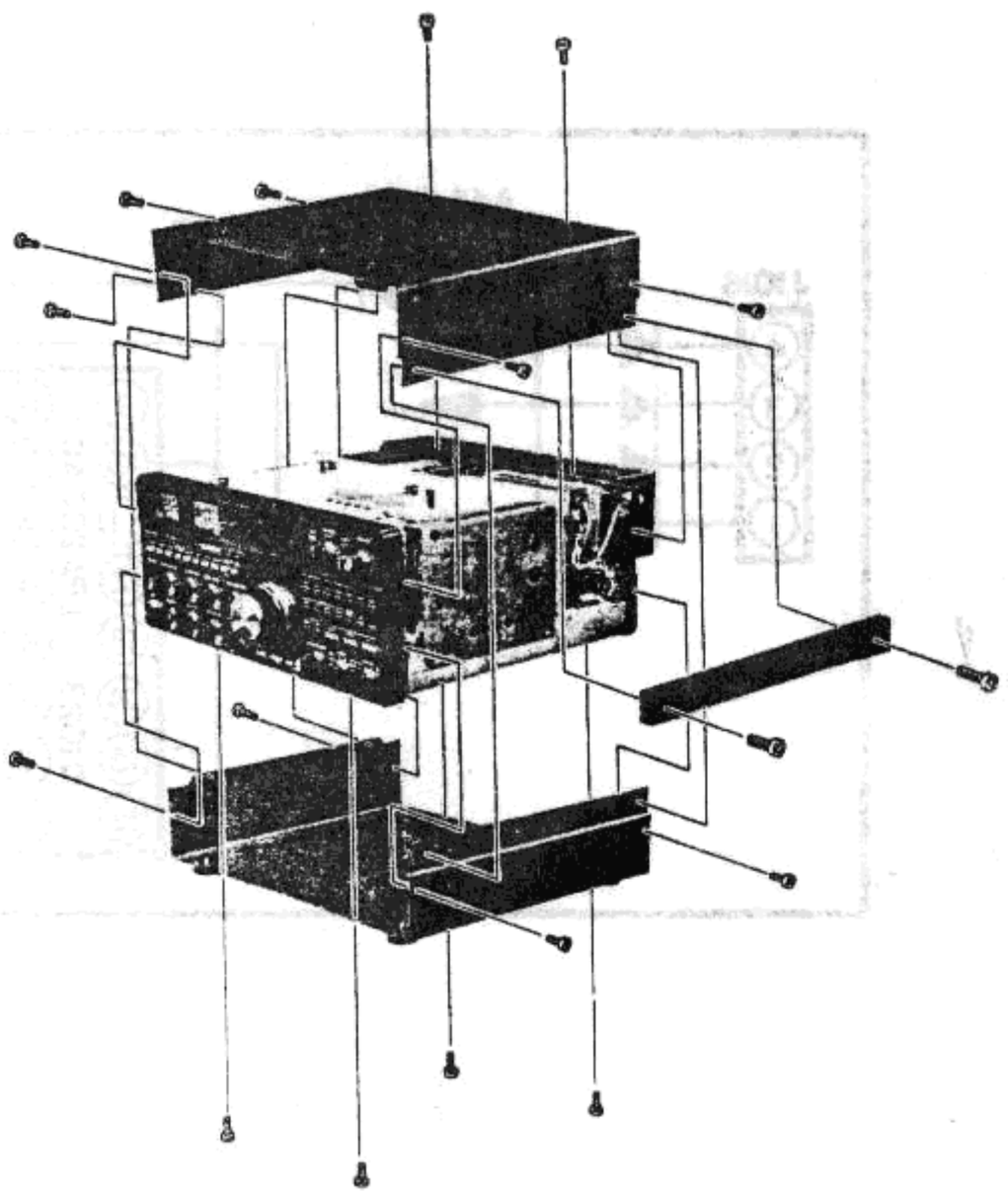

RF UNIT

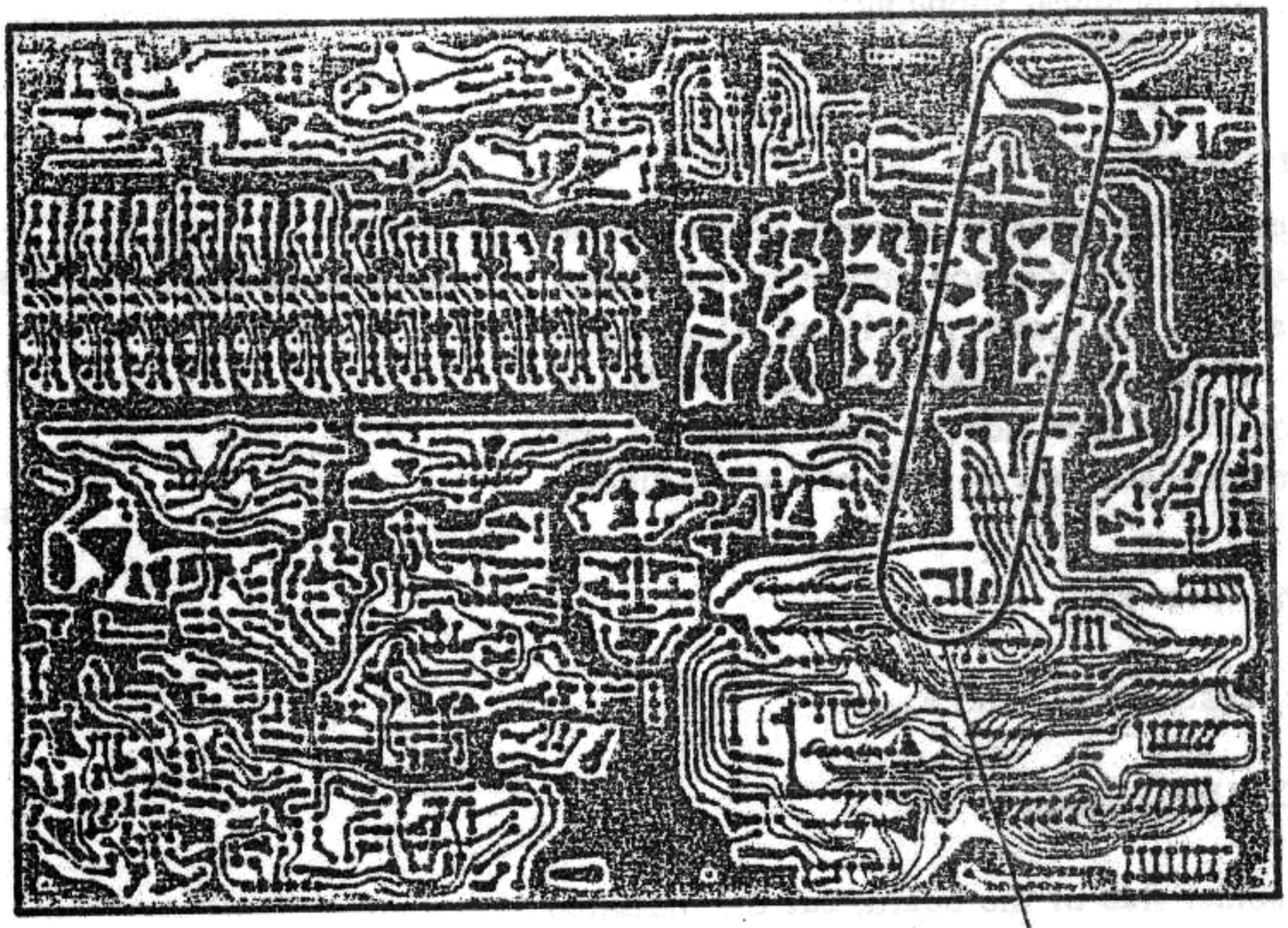

RF UNIT

Solder side

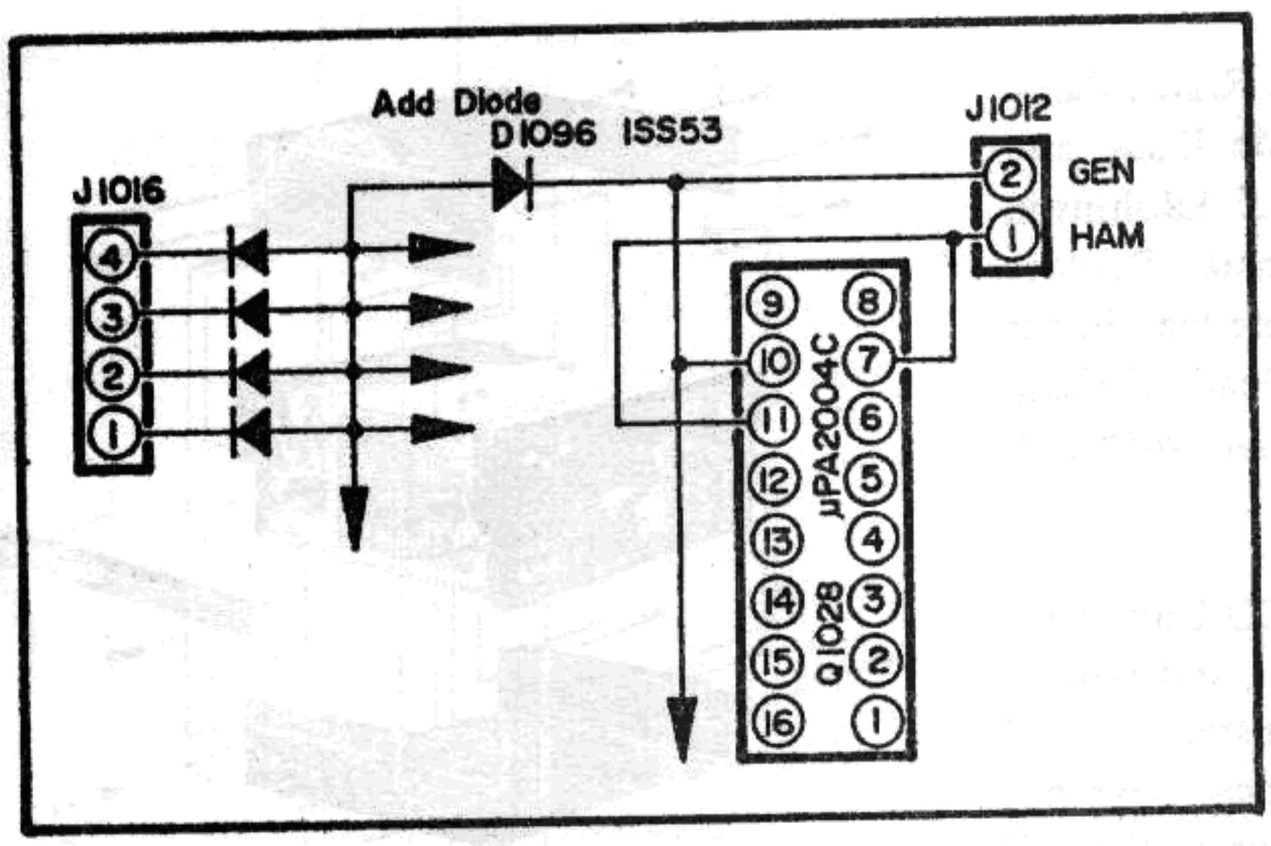

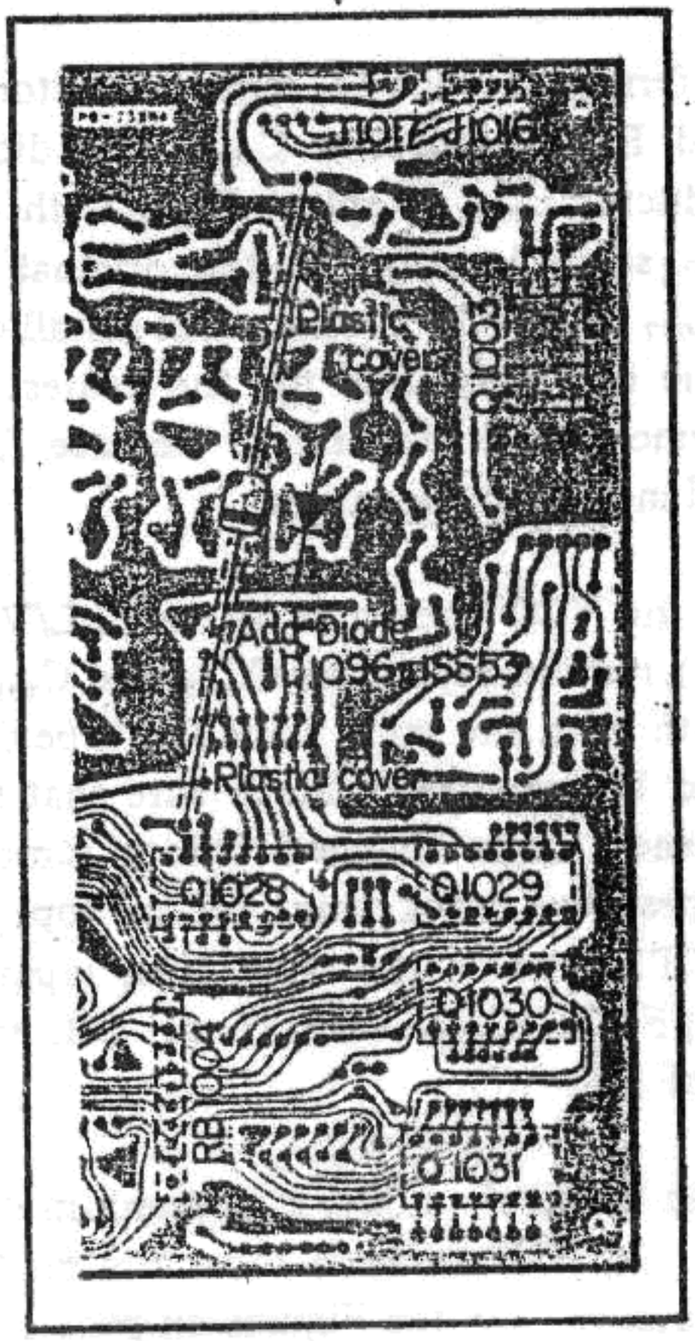

VFO UNIT

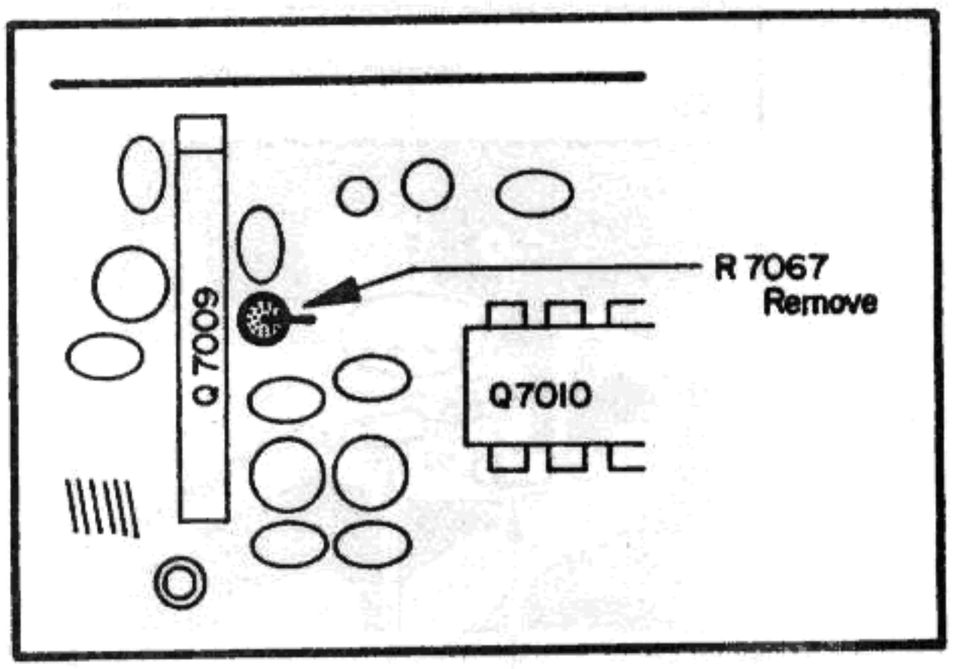

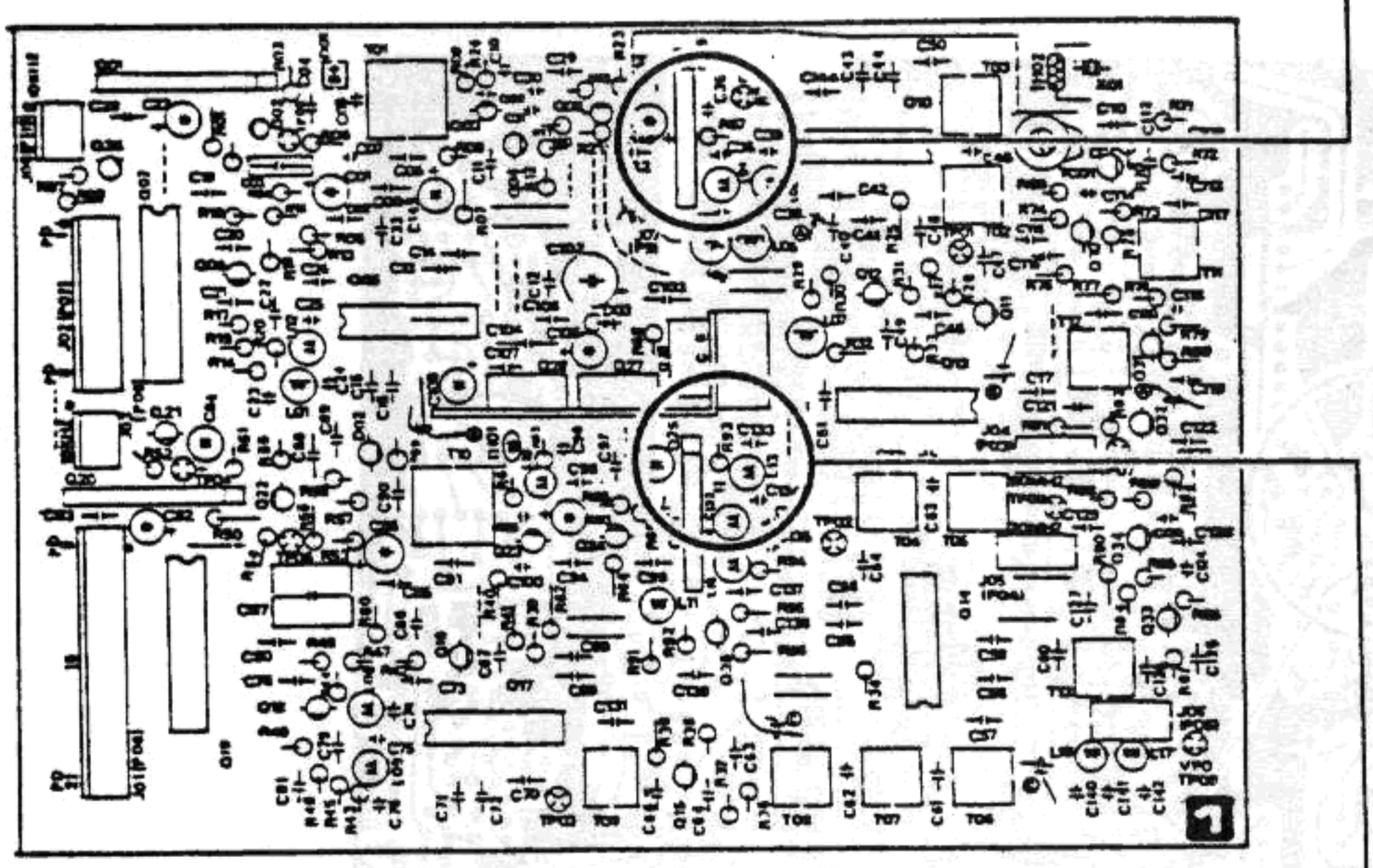

VFO UNIT Component side

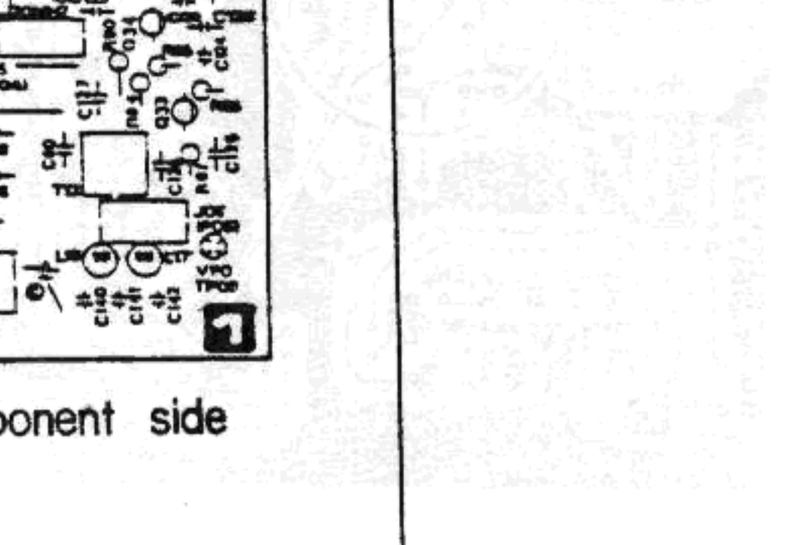

FT—980
OPTIONAL FILTER INSTALLATION

A. Required Parts (included w/kit)

This procedure is for installation of CW-W filter XF-8.9HC (Kit no. D2000011), and AM filter XF-8.9GA (Kit no. D2000012), and CW-N filter XF-455.8MCN (Kit no. D2000035); for any one or combination of these.

B. Modification Procedure

1. Disconnect the transceiver from the power source, and place it upside down on the work surface. Then remove the ten screws affixing the bottom cover, and the two screws affixing the carrying handle. Remove the cover and handle.

2. Locate the IF Unit, shown in the figure below, and remove the six screws marked with a star.

3. If installing the **XF-8.9HC CW-W filter**, refer to the figure below for the correct location on the board, and bolt the filter into place using the hardware supplied with the kit. Then solder the filter terminals into place on the solder side of the board. For this filter only, locate Jumper A as shown below, and change the connection of this jumper from the SSB to the CW terminal.

If the XF-455.8MCN CW-N filter is not being installed, and is not installed already, locate plug P_{71} (on J_{2001}), and reverse the wires in locations 3 and 4, so that the white/orange wire ends up at pin 3, and white/red at pin 4.

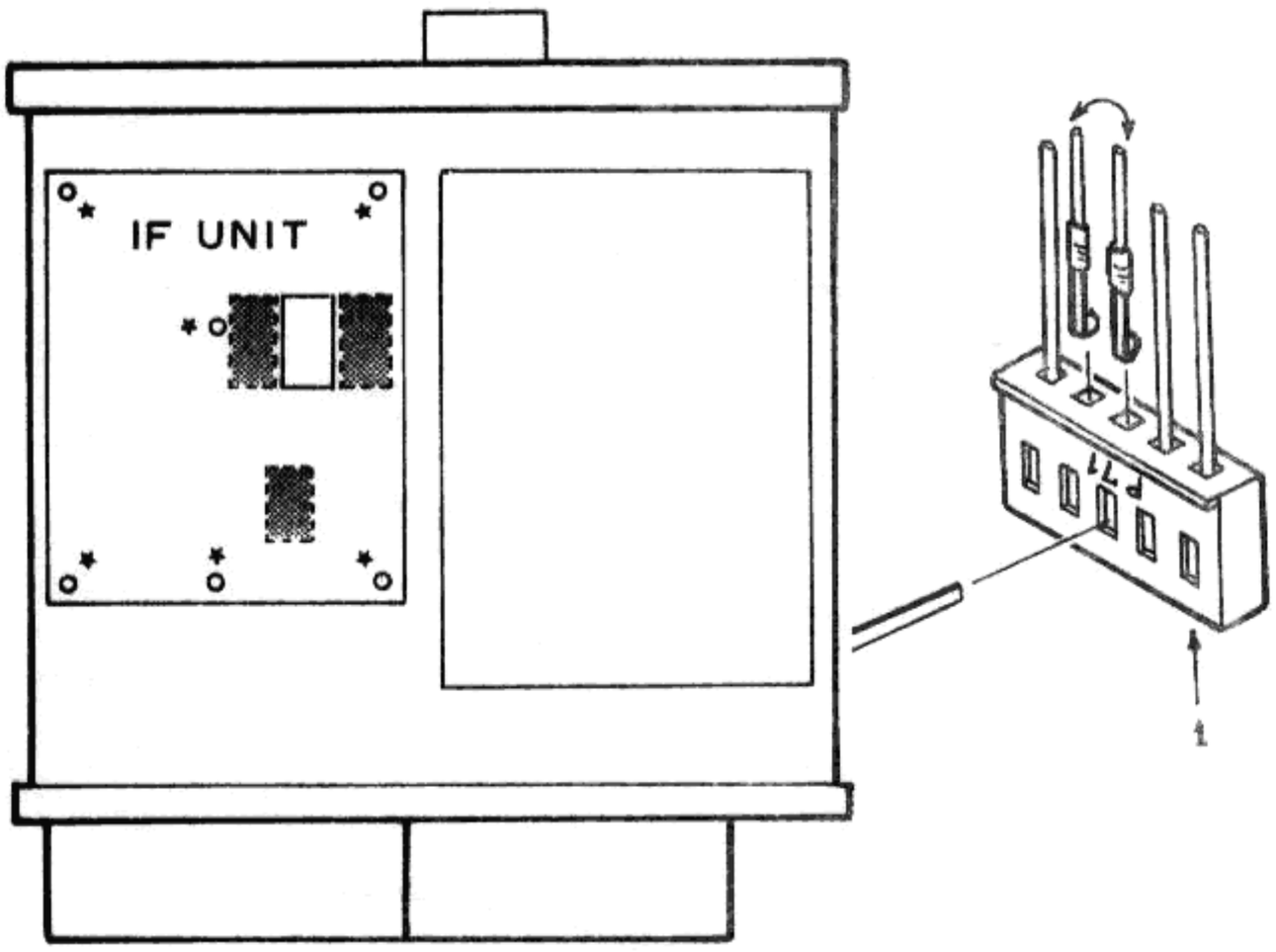

4. If installing the XF-8.9GA AM filter, refer to the figure below for the correct location on the board. Notice that there are three resistors in this filter location, which must be carefully unsoldered and removed before the filter is installed. Once the resistors have been removed, hold the filter snugly in place on the board while soldering the terminals on the solder side of the board.

5. For installation of the **XF-455.8MCN CW-N filter**, refer to the figure below for the correct location on the board. Hold the filter snugly in place on the board while soldering the terminals on the solder side of the board. Now refer to the figure below for the location of Jumper B, and change the connection of this jumper from the SSB to the CW position (but only when installing this filter).

Check the colors of the wires at pins 3 and 4 of P_{71} (on J_{2001}). Make sure that the white/red wire is at pin 3, and the white/orange wire is at pin 4. If not, reverse the connectors at these pins.

6. Replace the IF Unit and its six screws, making sure that no wires are stressed or pinched in the process. Then replace the bottom cover and its ten screws, followed by the carrying handle and its two screws.

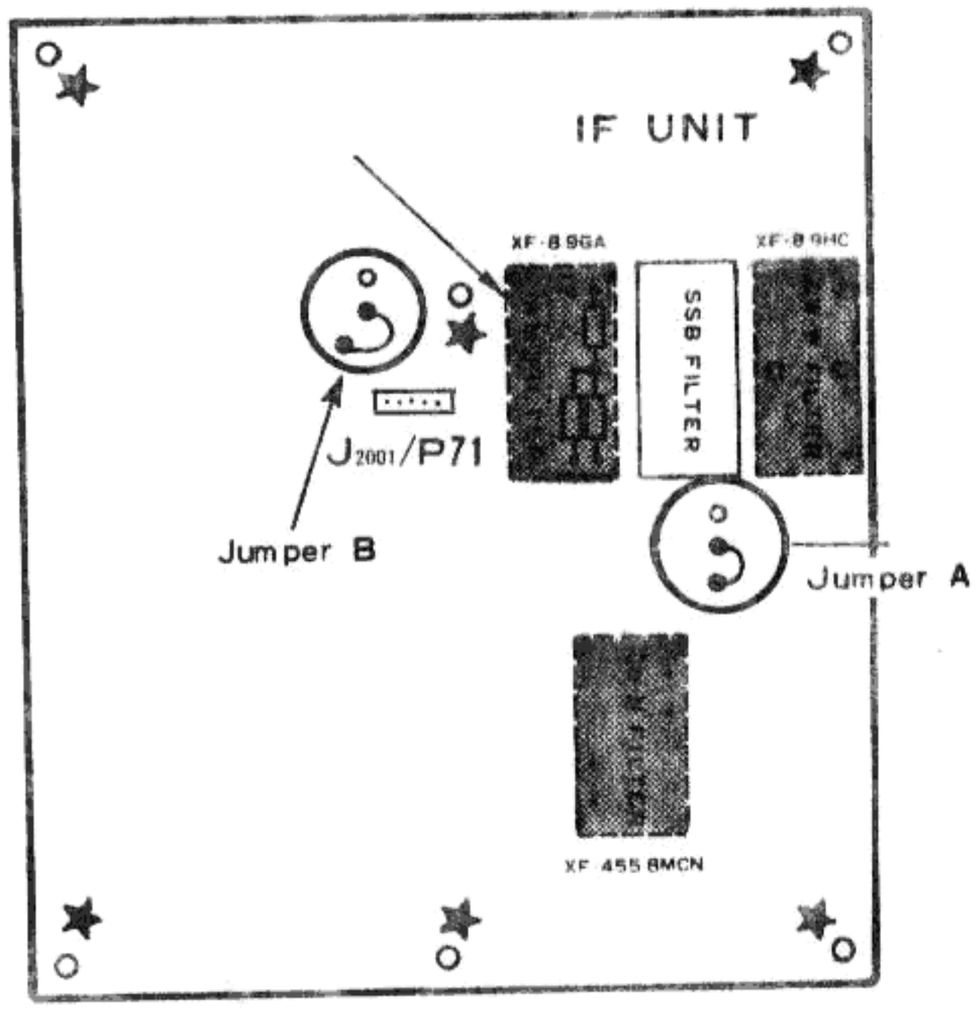

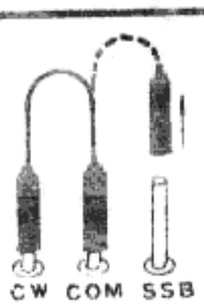

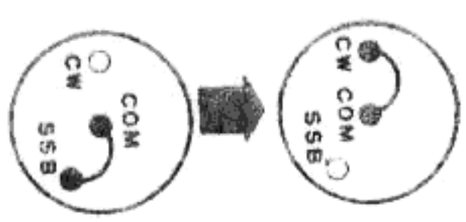

IMPORTANT NOTICE

To enable the FT-980 to operate full break-in with a linear amplifier designed for this purpose a small, high-speed relay is used in the T/R relay control circuit for the linear amplifier. Because this relay is small, certain precautions must be taken when connecting <u>any</u> linear amplifier.

First, make absolutely certain that a Back Pulse Cancelling Diode is installed across the coil of the T/R Relay in your linear amplifier. If such a diode is not installed, use the diode supplied with the FT-980, and install as shown in Figure 1.

Check the amount of current required to operate the T/R relay in the linear. If less than 200mA, the T/R control line can be connected directly to the TX GND and GND pins on the ACC-2 jack.

If the T/R relay in the linear requires more than 200mA, use a separate 12V DC relay and transistor between the linear and the ACC-1 jack, as shown in Figure 2. Make sure the coil of the added relay requires less than 200mA, and that the contacts are rated for a higher current than that required by the T/R relay in your linear.

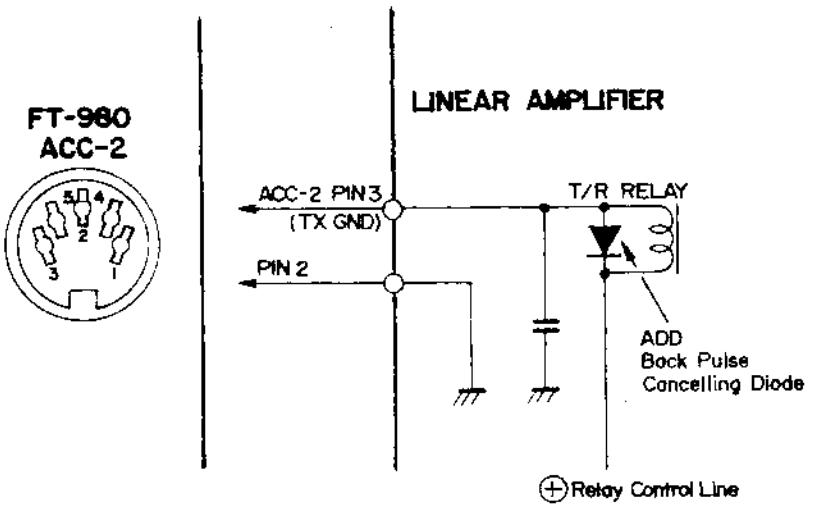

Figure 1

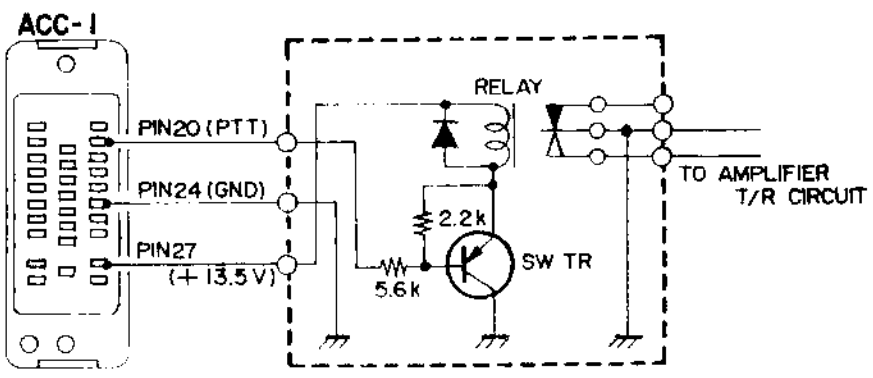

Figure 2

CAUTION

When a linear amplifier is used with the FT-980, check the current required to control the T/R relay in the linear amplfier. If less than 200 mA, the T/R control line can be directly connected to TX GND and GND on ACC-2 jack. However, also be sure that a BACK PULSE cancelling diode is installed across the T/R relay in your linear amplifier. If this diode is not present, install a general purpose rectifier diode as shown in Figure 1.

When the required T/R relay control is higher than 200 mA, the T/R control line from the linear amplifier must not be connected directly to the ACC-2 jack, but an extra relay box must be used to avoid damage to the T/R relay in the FT-980. Refer to Figure 2, and make the relay box for the interconnection. This relay box is not available from Yaesu.

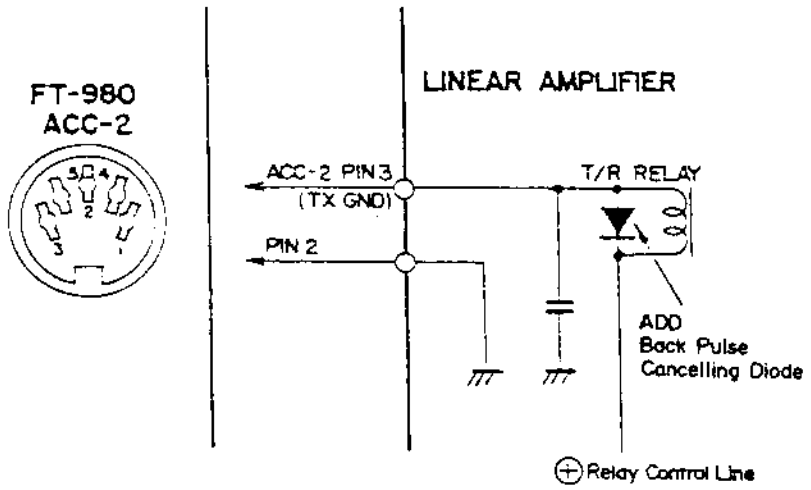

Figure 1

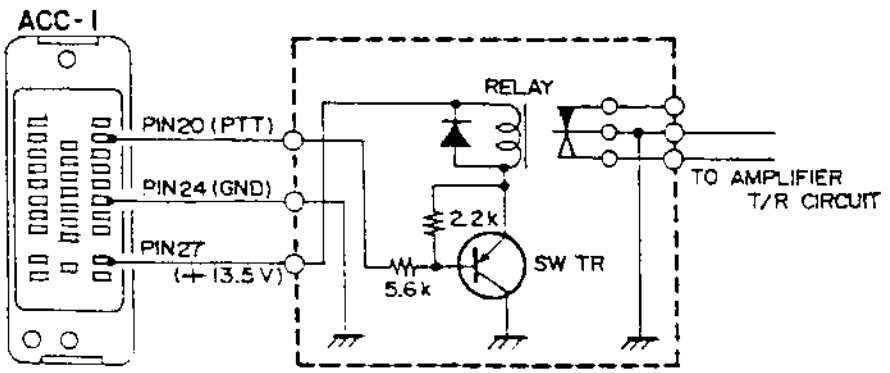

Figure 2