FT-990



Contents

Introduction & Chip Component Replacement 1

Cover Removal, Board Access & Pilot Lamp Replacement 2

Alignment 3

Block & Interconnection Diagrams 4

PCB Diagrams & Parts Lists 5

- RF Unit 5A
- IF Unit 5B
- AF Unit 5C
- Local Unit 5D
- PLL DDS & Carrier DDS Units 5E
- Control (CNTL) Unit 5F
- LPF Unit 5G
- 100-W Power Amp (PA) Unit 5H
- Tuner Main Unit 5I
- Tuner Control Unit 5J
- Connector Unit 5K
- Protector Unit 5L
- Display Unit 5M
- Potentiometer (VR) Unit 5N
- Switch A (SW-A) Unit 5O
- Key(pad) Unit 5P
- Rotary Encoder (R. Enc) Unit & Switch B (SW-B) Unit 5Q
- Pushbutton Switch (Push SW) Unit & Mic Unit 5R
- Headphone (HP) Unit 5S
- DC Switch Unit 5T
- Regulator (REG) Unit 5U
- Motherboard (Mother Unit) 5V
- Power Supply (PS) Unit 5W

Mechanical Details (Exploded Views, Packaging & Mechanical Parts) 6

Introduction



This manual provides technical information necessary for servicing the Yaesu FT-990 HF Transceiver. It does not include information on specifications, installation and operation, which are described in the *FT-990 Operating Manual*, provided with each transceiver, or on FT-990 accessories, which are described in manuals provided with each.

Servicing this equipment requires expertise in handling surface mount chip components. Attempts by non-qualified persons to service this equipment may result in permanent damage not covered by warranty.

For the major circuit boards, each side of the board is identified by the type of the majority of components installed on that side. In most cases one side has only chip components, and the other has either a mixture of both chip and lead components (trimmers, coils, electrolytic capacitors, packaged ICs, etc.), or lead components only.

While we believe the technical information in this manual is correct, Yaesu assumes no liability for damage that may occur as a result of typographical or other errors that may be present. Your cooperation in pointing out any inconsistencies in the technical information would be appreciated.

Yaesu Musen reserves the right to make changes in this transceiver and the alignment procedures, in the interest of technological improvement, without notification of the owners.

Chip Component Information

The diagrams below indicate some of the distinguishing features of common chip components.

Ceramic Capacitors

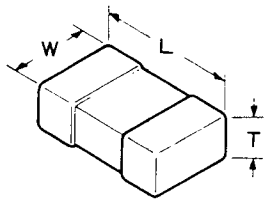

(Unit : mm)

Type	L	W	T
3216	3.2	1.6	0.45~0.60
2125	2.0	1.25	0.35~0.50
1608	1.6	0.8	0.65~0.95

Tantalum Capacitors

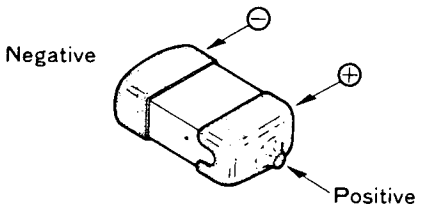

Polarized, Unmarked
(determine value from layout and Parts List)

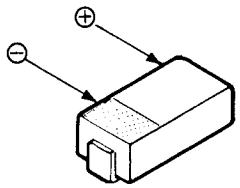

Examples :
J475 = 6.3V 4.7μF

G	4.0V	D	20V
J	6.3V	E	25V
A	10V	V	35V
C	16V		

Resistors

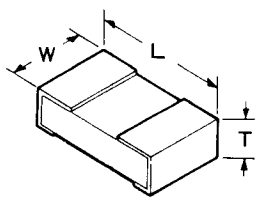

(Unit : mm)

Type	L	W	T
1/10	2.0	1.25	0.45
1/16	1.6	0.8	0.45

INDICATED LETTERS

1 2 3 4
5 6 7 8
9 0 .

Type RMC 1/10W, 1/16W
Marking* 100, 222, 473·····

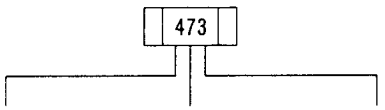

10' unit	1' unit	Multiplier code
0	0	10^0
1	1	10^1
2	2	10^2
3	3	10^3
4	4	10^4
5	5	10^5
6	6	10^6
7	7	10^7
8	8	10^8
9	9	10^9

Examples :
100 = 10Ω
222 = 2.2kΩ
473 = 47kΩ

Replacing Chip Components

Chip components are installed at the factory by a series of robots. The first one places a spot of adhesive resin at the location where each part is to be installed, and later robots handle and place parts using vacuum suction.

For single-sided boards, solder paste is applied and the board is then baked to harden the resin and flow the solder. For double-sided boards, no solder paste is applied, but the board is baked (or exposed to ultra-violet) to cure the resin before dip soldering.

In our laboratories and service shops, small quantities of chip components are mounted manually by applying a spot of resin, placing with tweezers, and then soldering by very small dual streams of hot air (without physical contact during soldering). We remove parts by first removing solder using a vacuum suction iron, which applies a light, steady vacuum at the iron tip, and then breaking the adhesive with tweezers.

The special vacuum soldering/desoldering equipment is recommended if you expect to do a lot of chip replacements. Otherwise, it is usually possible to remove and replace chip components with only a tapered, temperature-controlled soldering iron, a set of tweezers and braided copper solder wick. Soldering iron temperature should be below 280 °C (536 °F).

Precautions for Chip Replacement

✘ Do not disconnect a chip forcefully, or the foil pattern may peel off the board.

✘ Never re-use a chip component. Dispose of all removed chip components immediately to avoid mixing with new parts.

✘ Limit soldering time to 3 seconds or less to avoid damaging the component and board.

Removing Chip Components

❒ Remove the solder at each joint, one joint at a time, using solder wick whetted with non-acidic flux as shown below. Avoid applying pressure, and do not attempt to remove the tinning from the chip's electrode.

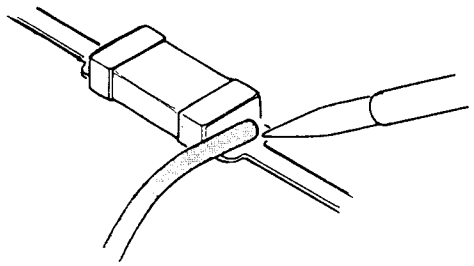

❒ Grasp the chip on both sides with tweezers, and gently twist the tweezers back and forth (to break the adhesive bond) while alternately heating each electrode. Be careful to avoid peeling the foil traces from the board. Dispose of the chip when removed.

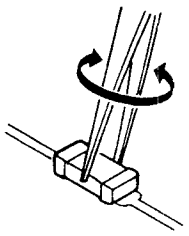

❒ After removing the chip, use the copper braid and soldering iron to which away any excess solder and smooth the land for installation of the replacement part.

Installing a Replacement Chip

As the value of some chip components is not indicated on the body of the chip, be careful to get the right part for replacement.

❒ Apply a small amount of solder to the land on one side where the chip is to be installed. Avoid too much solder, which may cause bridging (shorting to other parts).

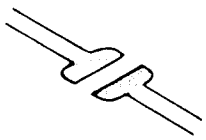

❒ Hold the chip with tweezers in the desired position, and apply the soldering iron with a motion line that indicated by the arrow in the diagram below. Do not apply heat for more than 3 seconds.

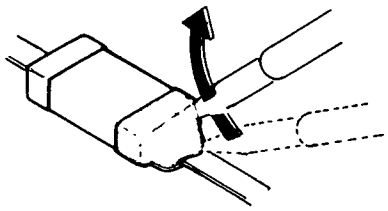

❒ Remove the tweezers and solder the electrode on the other side in the manner just described.

Cover Removal & Board Access

❒ To remove the top cover, disconnect all cables, remove the 2 screws affixing the carrying handle, and the 8 screws shown below. Then lift the top cover off.

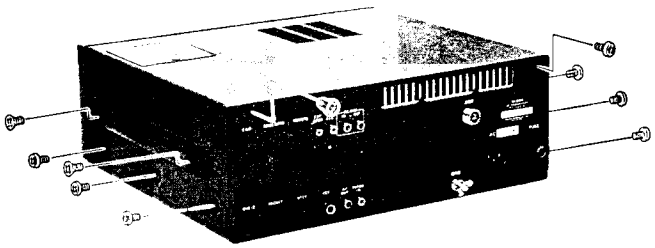

❒ To remove the bottom cover, remove the 10 screws shown below.

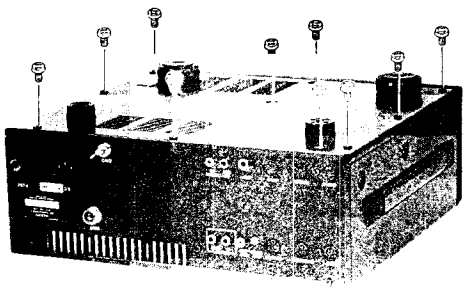

❒ The Cntl, Local, AF, IF and RF Units are accessible with the top cover removed. Remove the access panel label plate, and then the two screws at the front and back edge of the board to be removed (for the Local Unit, coaxial cables at the front and rear edges must first be unplugged). Then alternately pry up on the front and rear mounting tabs.

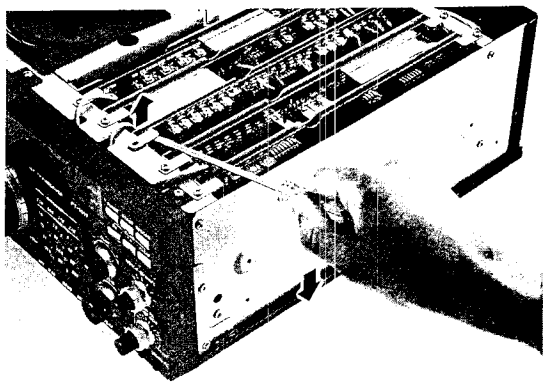

❒ Three extender boards are available for adjustments on the plug-in boards: Board #1 is for the RF, IF and Local Units, #2 for the AF Unit, and #3 for the Cntl Unit.

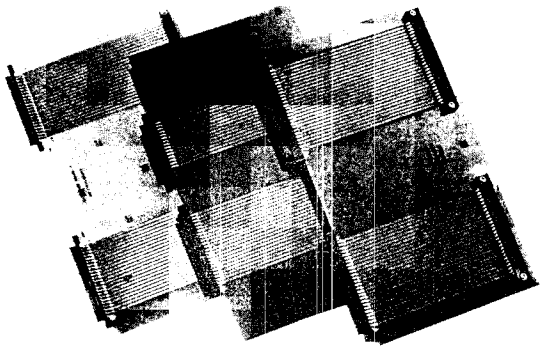

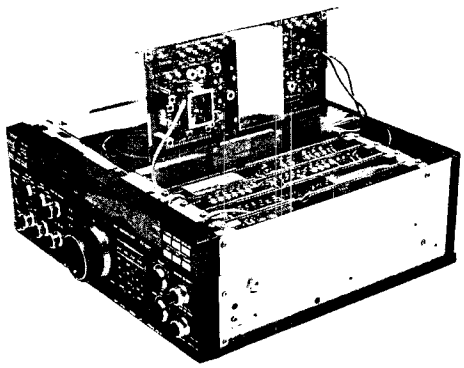

Pilot Lamp Replacement

- ❒ Disconnect all cables, and remove the top and bottom covers.
- ❒ Remove the 7 screws from the edges of the front panel as indicated below, and loosen the two remaining screws at the lower edge on each side.
- ❒ Fold the front panel forward and down to access the inside.
- ❒ Remove the 2 screws in the lamp reflector, and remove the reflector to access the lamp within.

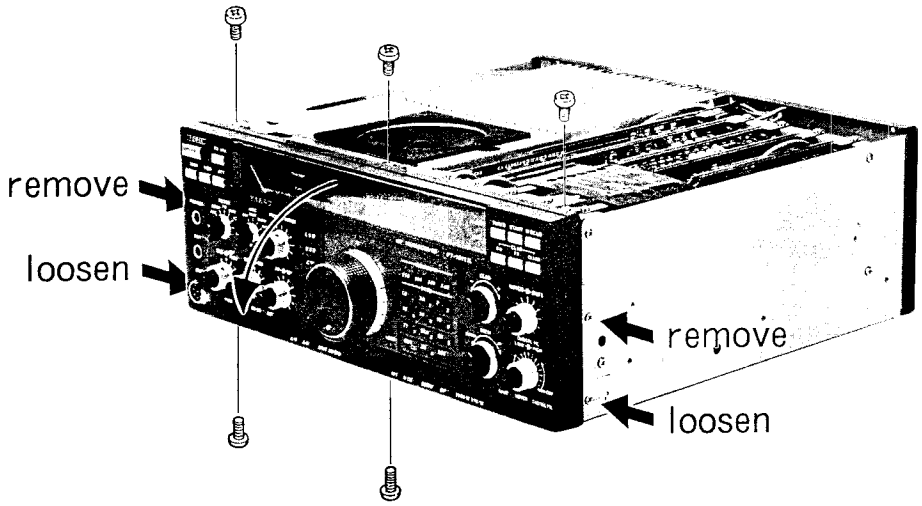

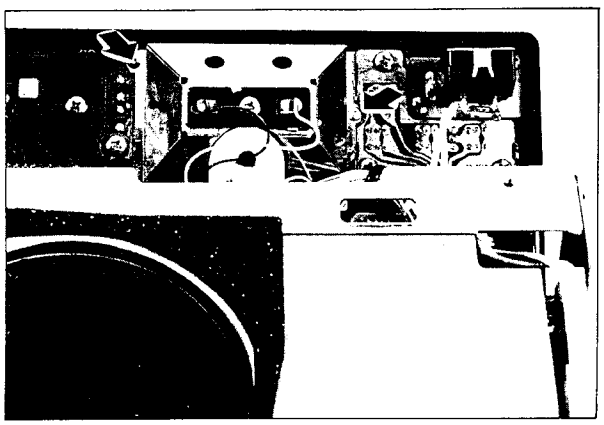

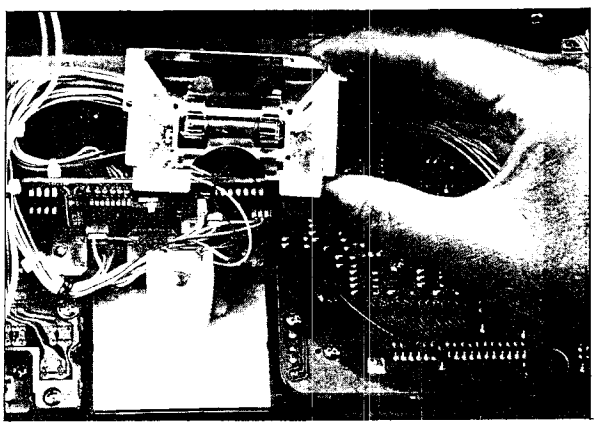

Board Locations

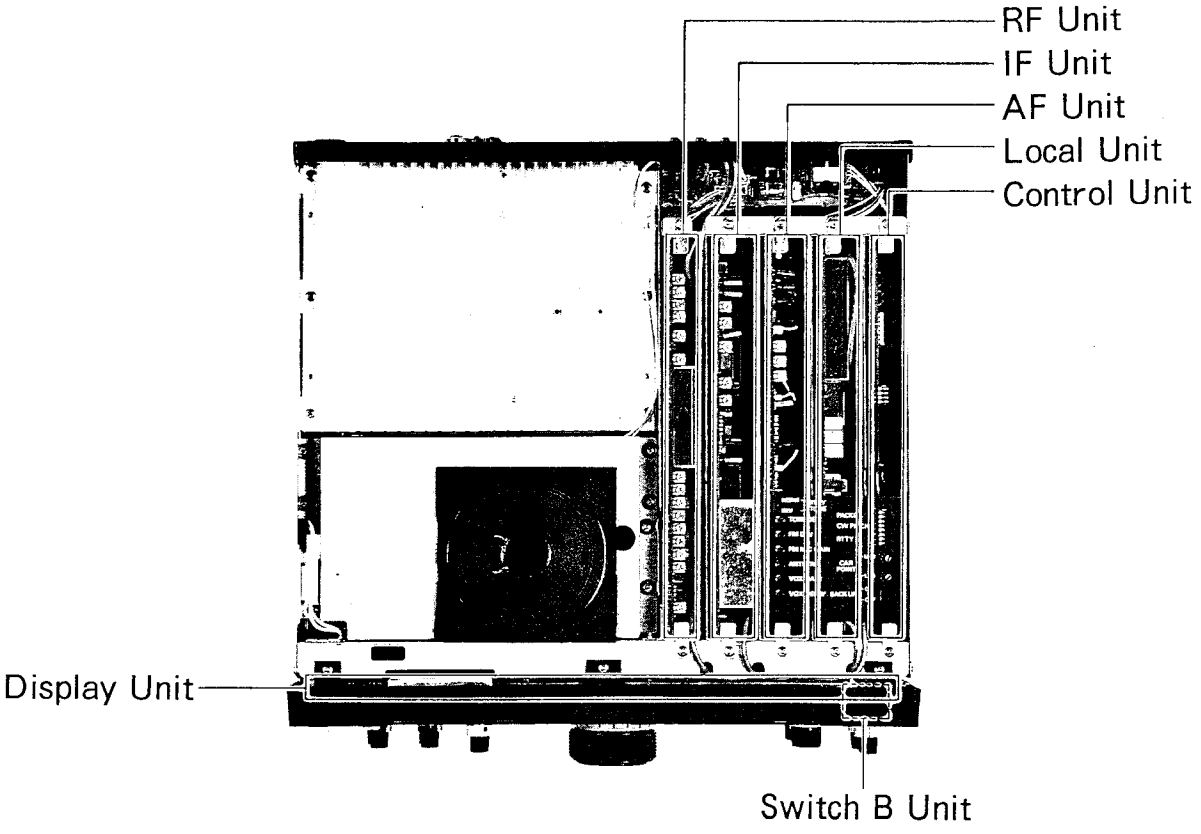

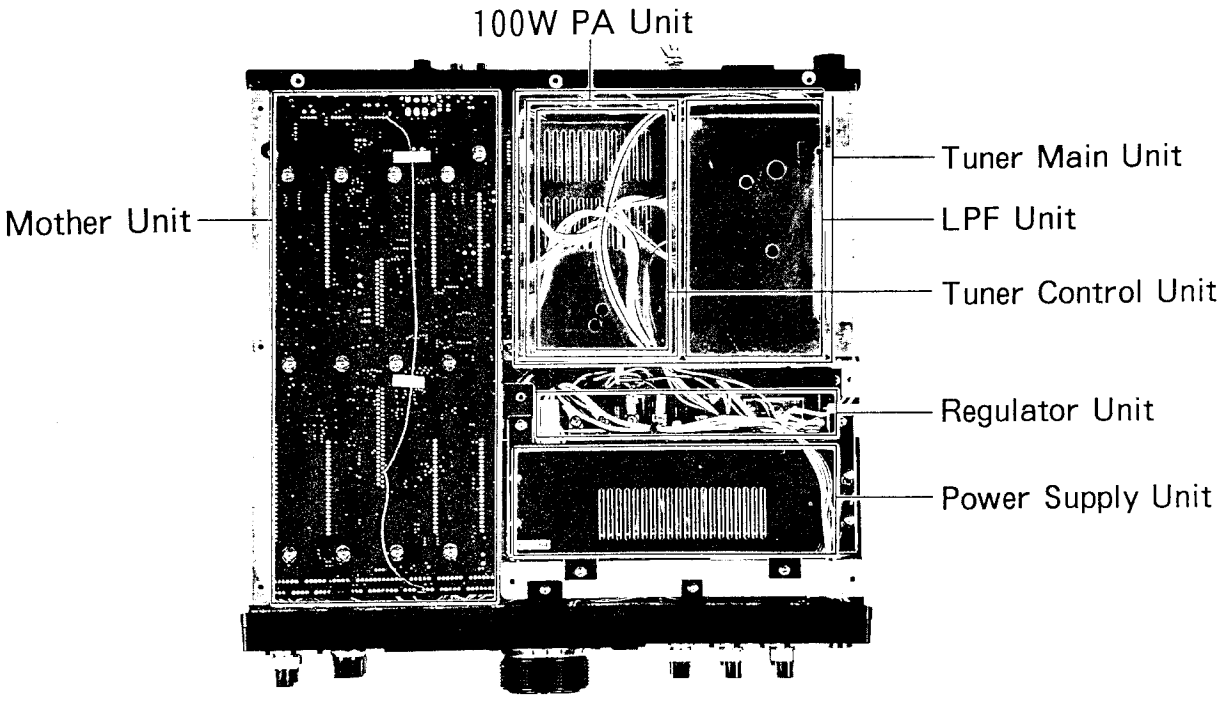

Notes:

Alignment

The FT-990 is carefully designed to allow the knowledgeable operator to make nearly all adjustments required for various station conditions, modes and operator preferences simply from the controls on the panels, without opening the case of the transceiver. These adjustments, plus certain internal settings, are described in the *FT-990 Operating Manual.*

The following procedures cover the sometimes critical and tedious adjustments that are not normally required once the transceiver has left the factory. However, if damage occurs and some parts subsequently be replaced, realignment may be required. If a sudden problem occurs during normal operation, it is likely due to component failure; realignment should not be done until after the faulty component has been replaced.

We recommend that servicing be performed only by authorized Yaesu service technicians, experienced with the circuitry and fully equipped for repair and alignment. So if a fault is suspected, you should contact the selling dealer for instructions regarding repair. Authorized Yaesu service technicians have the latest modification information, and realign all circuits and make complete performance checks to ensure compliance with factory specifications after replacing faulty components.

Those who do undertake any of the following alignments are cautioned to proceed at their own risk. Problems caused by unauthorized attempts at realignment are not covered by the warranty policy. Also, Yaesu must reserve the right to change circuits and alignment procedures in the interest of improved performance, without notifying owners.

Under no circumstances should any alignment be attempted unless the normal function and operation of the transceiver are clearly understood, the cause of the malfunction has been clearly pinpointed and any faulty components replaced, and the need for realignment determined to be absolutely necessary.

The following test equipment (and thorough familiarity with its correct use) is necessary for complete realignment. Correction of problems caused by misalignment resulting from use of improper test equipment is not covered under the warranty policy. While most steps do not require all of the equipment listed, the interactions of some adjustments may require that more complex adjustments be performed afterwards. Do not attempt to perform only a single step unless it is clearly isolated electrically from all other steps. Rather, have all test equipment ready before beginning, and follow all of the steps in a section in the order they are presented.

- ❒ Digital DC Voltmeter (high-Z, >1 MΩ/V)
- ❒ DC Ammeter
- ❒ RF Millivoltmeter
- ❒ AF Millivoltmeter
- ❒ RF Standard Signal Generator w/calibrated output and dB scale, 0 dB = 0.5 µV
- ❒ AF Signal Generator with calibrated output
- ❒ Spectrum Analyzer or receiver (30 MHz)
- ❒ Oscilloscope
- ❒ Frequency Counter
- ❒ 50-Ω Dummy Load (150 watts)
- ❒ 16.6-Ω Dummy Load (>150 W)
- ❒ In-Line Wattmeter (25 ~ 150 W, 50-Ω)
- ❒ Linear Detector
- ❒ RF Attenuator (>150-W, 40-dB) or RF coupler
- ❒ Extender Board Set (part no. A03850001)

Alignment Preparation & Precautions

A 50-Ω dummy load and inline wattmeter must be connected to the antenna jack in all procedures that call for transmission, except where specified otherwise. Correct alignment is not possible with an antenna.

Except where specified otherwise, the transceiver should be tuned to 14.2 MHz, USB mode, and these controls set as indicated:

- ❒ **MOX** & **VOX** buttons OFF (■)
- ❒ **AGC** to **FAST**
- ❒ **ATT** to **OFF**
- ❒ **MIC** & **RF PWR** fully ccw (minimum)
- ❒ **PROC** fully ccw (minimum)

❒ **SQL** fully ccw, **NB** 12-o'clock

❒ **AF** as required, **RF** fully cw (maximum)

❒ **NOTCH** & **SHIFT** to 12-o'clock

After completing one step, read the following step to determine whether the same test equipment will be required. If not, remove the test equipment (except dummy load and wattmeter, if connected) before proceeding.

Correct alignment requires that the ambient temperature be the same as that of the transceiver and test equipment, and that this temperature be held constant between 20 and 30 °C (68 ~ 86 °F). If the transceiver is brought into the shop from hot or cold air it should be allowed some time for thermal equalization with the environment before alignment.

Alignments must only be made with oscillator shields and circuit boards firmly affixed in place. Only one extender board should be installed at a time for access to the board being aligned. Also, the test equipment must be thoroughly warmed up before beginning.

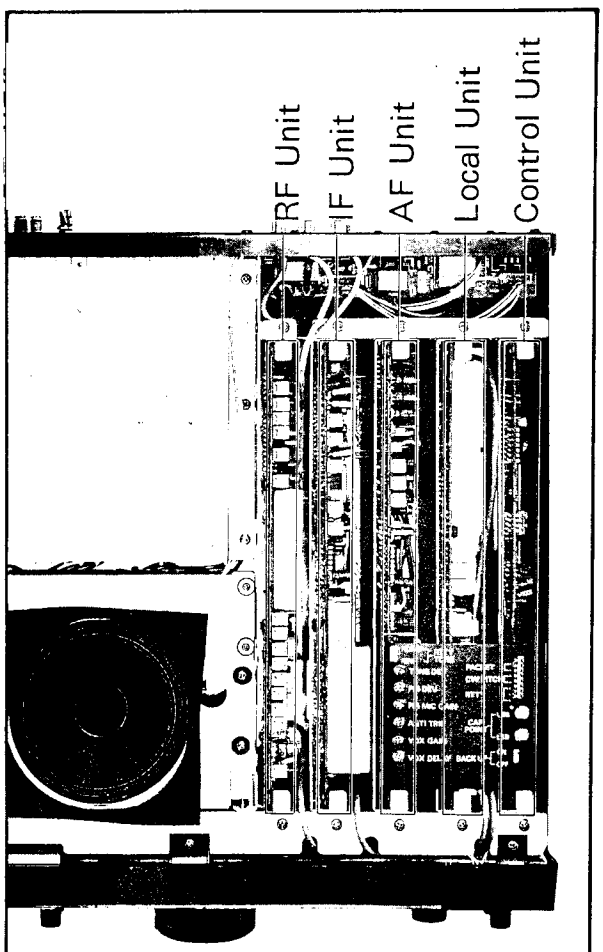

Circuit Board Locations

Note: Signal levels in dB referred to in alignment are based on 0 dBμ = 0.5 μV.

***Table note:** DC voltages should be within ± 10% of those listed in the voltage tables.*

Local Unit (requires Extender Board #1)

3rd Local BPF

Connect the RF millivoltmeter to pin 1 of J4003 on the Local Unit (see photo on next page), and adjust T4011 and T4012 for peak (>70 mV_{rms}).

Reference Frequency

Connect the frequency counter to pin 1 of J4003. Adjust the TCXO-2 trimmer (if installed) or TC4001, for 10.48576 MHz ± 5 Hz.

36.269-MHz 2nd Local Buffer

❒ Connect the RF millivoltmeter to TP4003.

❒ Preadjust T4017 for maximum on the meter (at least 1 V_{rms}).

❒ Remove the coaxial plug from J4004 and connect a 50-Ω resistor across the socket. Connect the RF millivoltmeter across the resistor, and adjust T4018 and T4019 for maximum on the meter (> 0.3 V_{rms}).

❒ Now adjust T4017 for 224 mV_{rms} (0 dBm) ± 10 mV_{rms} on the meter.

❒ Connect the frequency counter to J4004 and comfirm 36.269 MHz ± 600 Hz.

❒ Replace the plug in J4004.

41.84-MHz PLL Local BPF

❒ Tune to 14.030 MHz, USB mode.

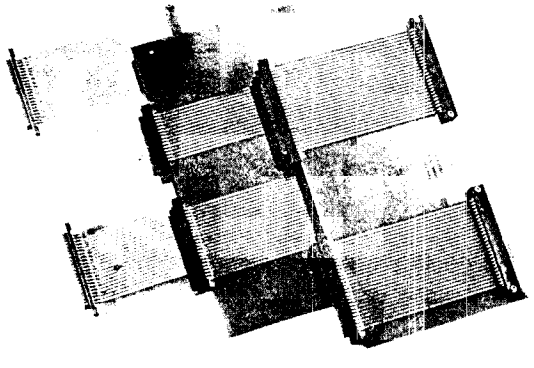

Extender Boards

❒ Connect the RF millivoltmeter to TP4002 and adjust T4013 ~ T4016 for peak. Final voltage should be at least 60 mV_{rms}.

PLL VCV (Varactor Control Voltage)

With the USB mode selected, connect the DC voltmeter to TP4001. Tune the display to each adjustment frequency in the following table and adjust the corresponding coil for 8.0 ± 0.1 V on the meter. Then retune to the check frequency and confirm 1.4 ~ 2 V. Repeat at each listed frequency.

Adj. Freq. (VCO#)	Adjust for 8 V @TP4001	Check Freq. (for 1.4 ~ 2 V)
3.999 MHz (VCO1)	T4005	0.100 MHz
7.499 MHz (VCO2)	T4004	4.000 MHz
14.499 MHz (VCO3)	T4003	7.500 MHz
21.499 MHz (VCO4)	T4002	14.500 MHz
29.999 MHz (VCO5)	T4001	21.500 MHz

PA Unit (RF Power Amplifier)

Final Idling Current

Temporarily disconnect the jumper between TP6101 and TP6102, and connect the ammeter in its place. Key the transmitter in an SSB mode, and with no microphone input, adjust VR6101 for 200 ± 50 mA. Then reinstall the jumper.

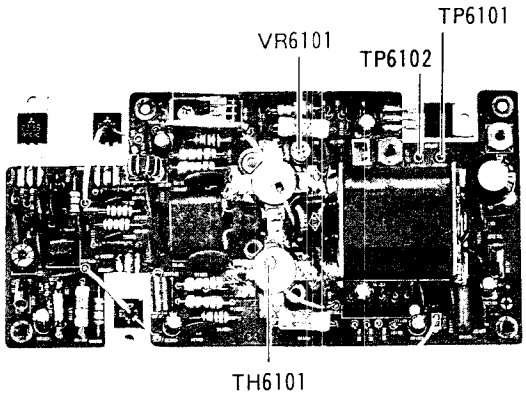

PA Unit: Test & Alignment Points

LPF Unit

CM Coupler Balance

With the 50-Ω dummy load connected to the **ANT** jack, tune the transceiver to 14.2 MHz, and select the CW mode. Connect the DC voltmeter between pins 1 (–) and 3 (+) of JP6002 (see photo next page), key the transmitter and adjust TC6001 for *minimum* on the voltmeter.

Tuner Unit

On the front panel, set the **METER** selector to **SWR**, and the **DRIVE** and **RF PWR** controls fully clockwise (maximum).

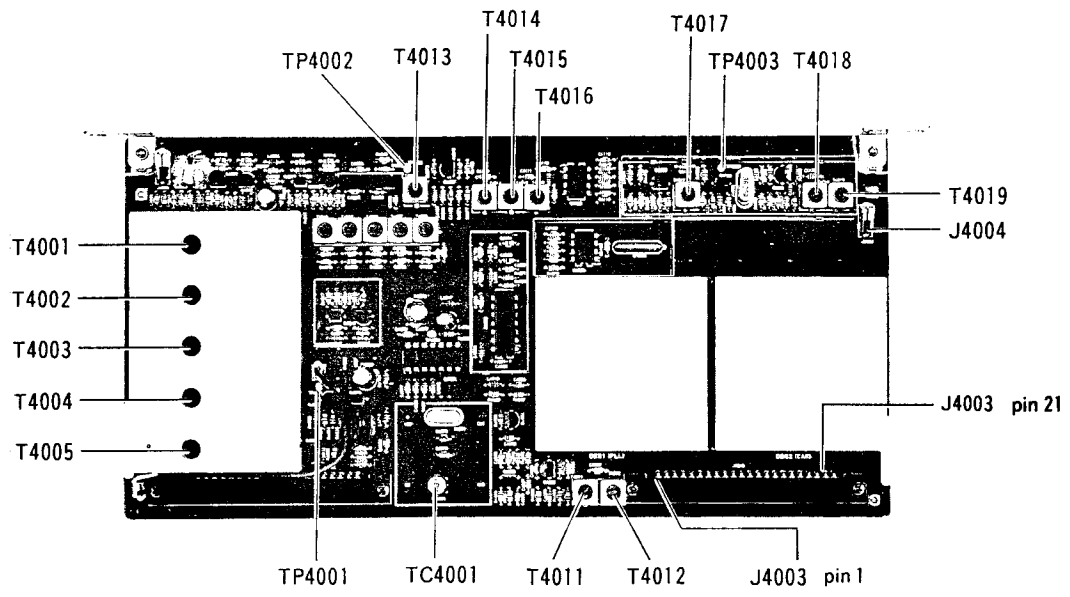

Local Unit: Test & Alignment Points

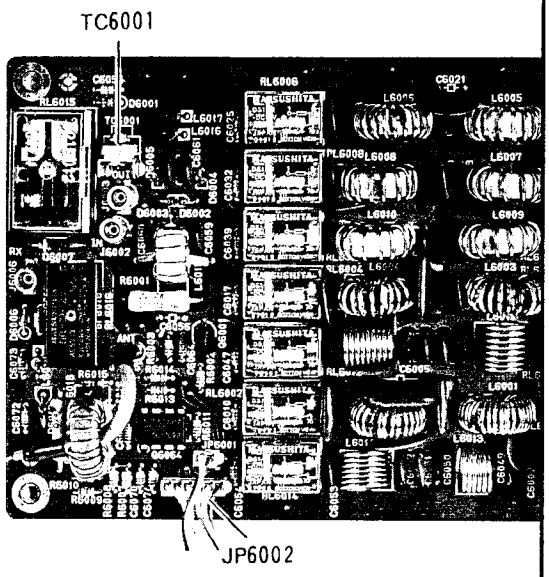

LPF Unit: Test & Alignment Points

Tuning Capacitor/Motor (Mechanical Check, Setting & Adjustment)

- ❒ Loosen all setscrews in the shaft coupler, and turn the coupler by hand to confirm it moves freely (the motor and capacitor should not move). If the coupler binds, check the motor mounting position (it is soldered in place) and the capacitor mounting (screws).
- ❒ Turn the power switch off, and jump TP-6501 to chassis ground.
- ❒ Turn the power switch on — the motor should rotate, and then stop.
- ❒ Set the capacitor to its maximum capacitance position (plates fully meshed) by hand, and tighten all shaft coupler setscrews, using care not to disturb the capacitor or motor positions.
- ❒ Turn the power off, and jumper TP6502 to chassis ground (along with TP6501).
- ❒ Turn the power back on. The motor should move 180°, and the capacitor should be then at minimum capacitance (fully unmeshed).
- ❒ Remove the grounding jumpers from TP6501 and TP6502.

SWR Meter Calibration

With the **METER** selector set to **SWR**, the antenna tuner *off*, and no connection to the **ANT** jack, tune the transceiver to 1.84 MHz, CW mode. Press the **MOX** button and adjust VR6501 for full scale meter deflection.

Tuner Impedance

- ❒ Connect the 50-Ω dummy load and wattmeter to the **ANT** jack, tune the transceiver to 3.75 MHz, CW mode.
- ❒ Press the **START** button and confirm that the **TUNER** and **WAIT** LEDs come on, the transmitter is activated, and the **HI SWR** LED *does not* come on. Then press the **MOX** button and confirm that the S-meter shows an SWR of 1.1 or better. If not, adjust TC6401 (on the

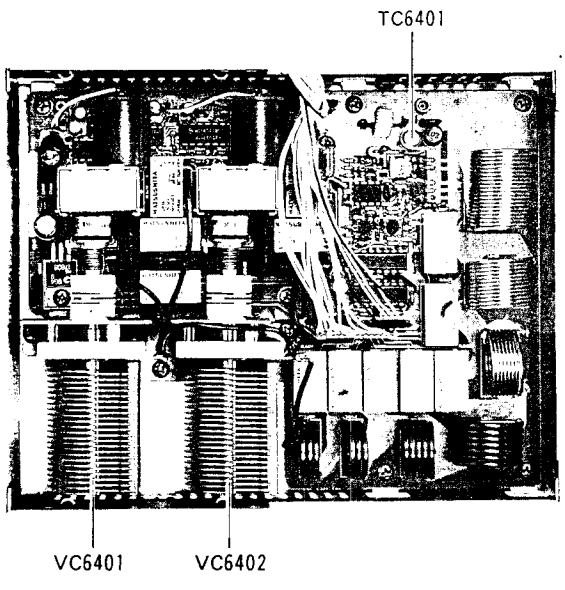

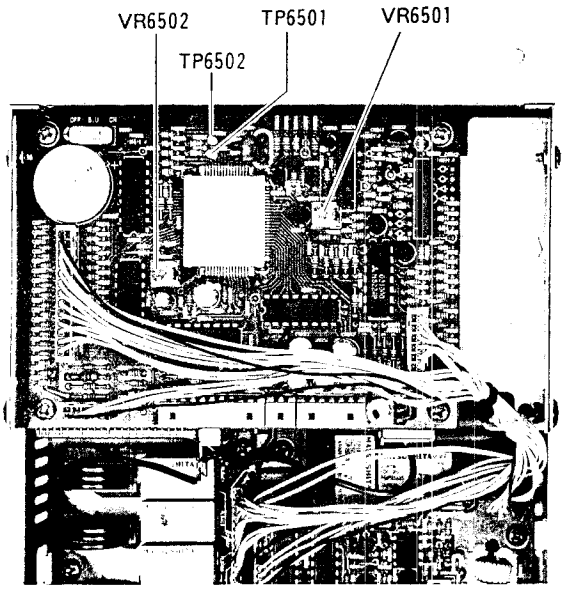

Tuner Unit: Test & Alignment Points

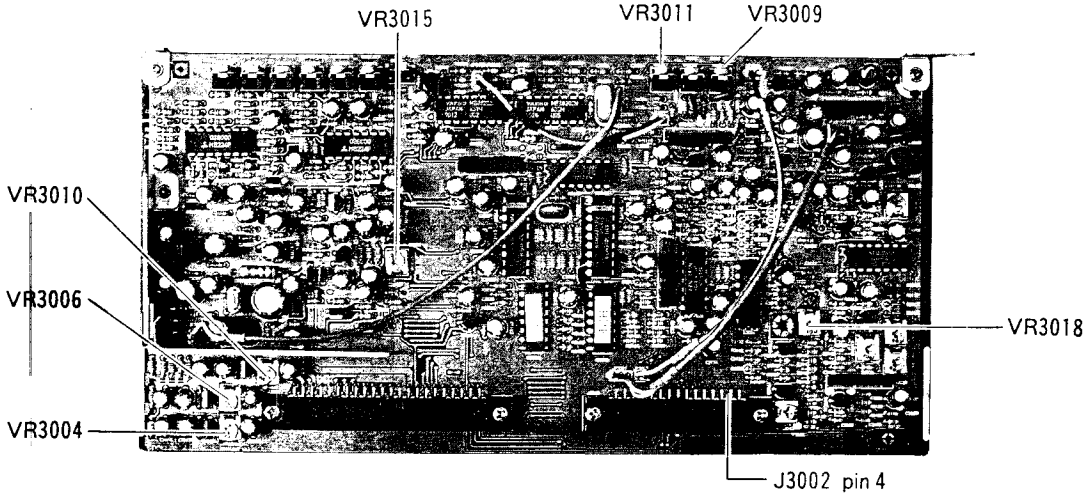

AF Unit: Receiver Test & Alignment Points

Tuner Main Unit) so that it does, and press **START** again.

High SWR Sensing

❒ Connect the 16.6-Ω dummy load to the **ANT** jack and tune the transceiver to 1.84 MHz, CW mode, with the **TUNER** switch *off*.

❒ Press the **MOX** button and adjust VR6502 so that the **HI SWR** LED just comes on.

Default Beeper & Sidetone Levels

❒ The default Key Beeper level is the 10-o'clock position of VR3011 (AF Unit, top edge).

❒ The default sidetone level is set by connecting an AF millivoltmeter across an 8-Ω load to the **EXT SP** jack, and adjusting VR3009 (AF Unit, top edge) for 200 mV (± 10 mV) with the **SPOT** button pressed.

IF Unit (requires Extender Board #1)

2nd Local Buffer Level

Connect the RF millivoltmeter to TP2002 and adjust T2008 for peak (at least 250 mV_{rms}).

3rd Local Buffer Level

Connect the RF millivoltmeter to TP2003 and adjust T2018 for peak (at least 80 mV_{rms}).

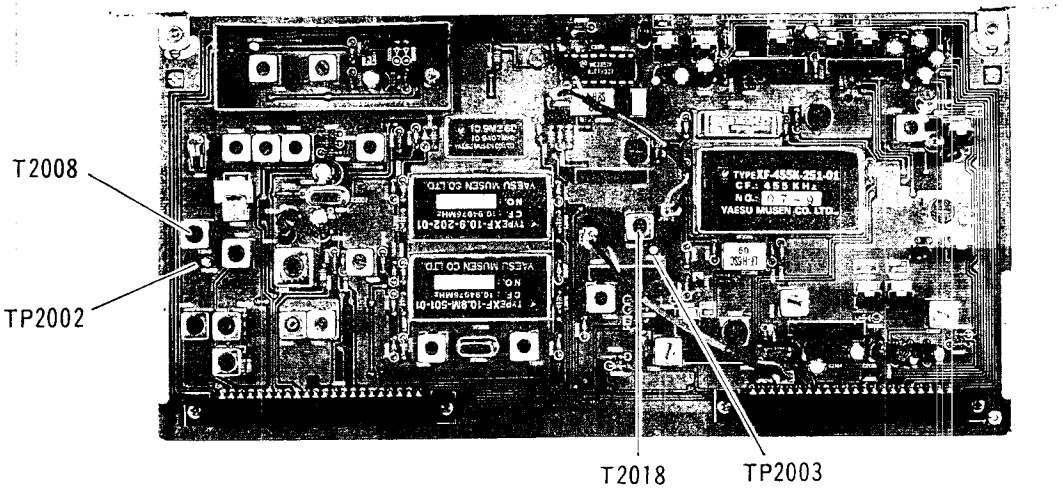

IF Unit: Local Buffer Test & Alignment Points

Receiver Circuits

IF Shift Zero Set (on SW-B Unit)

- ❒ Connect the frequency counter to pin 21 of Local Unit board connector J4003. Tune to 14.200 MHz, USB mode, and set the **MIC** gain and **RF PWR** to minimum (ccw). Set the **SHIFT** control to precisely 12 o'clock.
- ❒ Adjust VR8102 while both receiving and transmitting, so that the counter shows the same frequency (within ± 20 Hz).

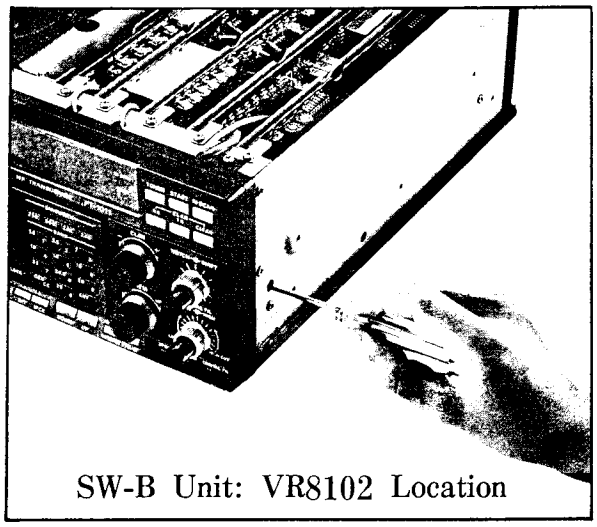

SW-B Unit: VR8102 Location

SSB Carrier Balance (AF Unit on Ext. Bd. #2)

Connect the RF millivoltmeter to pin 4 of board connector J3002 on the AF Unit, and adjust VR3018 for minimum voltage.

S-Meter Zero Set

Adjust VR2005 on the top edge of the IF Unit to just below the S-meter threshold.

IF Interstage Transformers (RF, then IF Unit on Ext. Bd. #1)

- ❒ Inject 20 dBμ at 14.200 MHz from the RF signal generator to the **ANT** jack.
- ❒ Put the RF Unit on the Extender and adjust T1005, T1010, T1011 and T1013 on the RF Unit, several times, for peak on the S-meter.
- ❒ Move the Extender to the IF Unit, and adjust T2003 ~ T2007, T2017, T2021, T2022 and T2023, several times for S-meter peak.

AM Wide Filter Matching (IF Unit on Ext. Bd. #1)

With the same setup as in the last step, select the AM mode and adjust T2015 and T2016 on the IF Unit for peak S-meter deflection.

IF Notch Depth (IF Unit on Ext. Bd. #1)

- ❒ Inject 40 dBμ at 14.200 MHz from the RF signal generator to the **ANT** jack. Select USB mode and tune to 14.20150 MHz (so a 1500-Hz heterodyne is heard).
- ❒ Press the **NOTCH** button and, with the **NOTCH** control centered, adjust L2010 and VR2007 alternately several times for minimum S-meter deflection.

IF Gain (IF Unit on Ext. Bd. #1)

Inject 6 dBμ at 14.200 MHz from the RF signal generator to the **ANT** jack, and adjust VR2008 on the IF Unit for S-1 deflection.

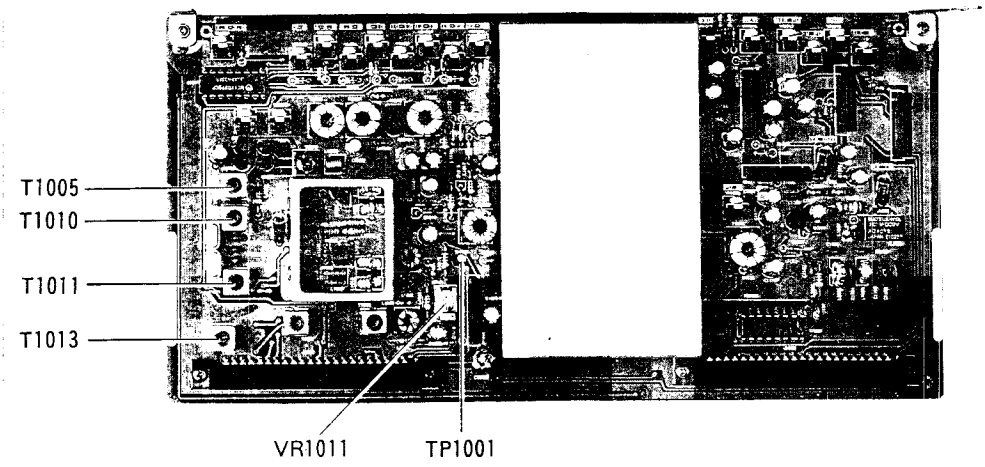

RF Unit: Receiver Test & Alignment Points

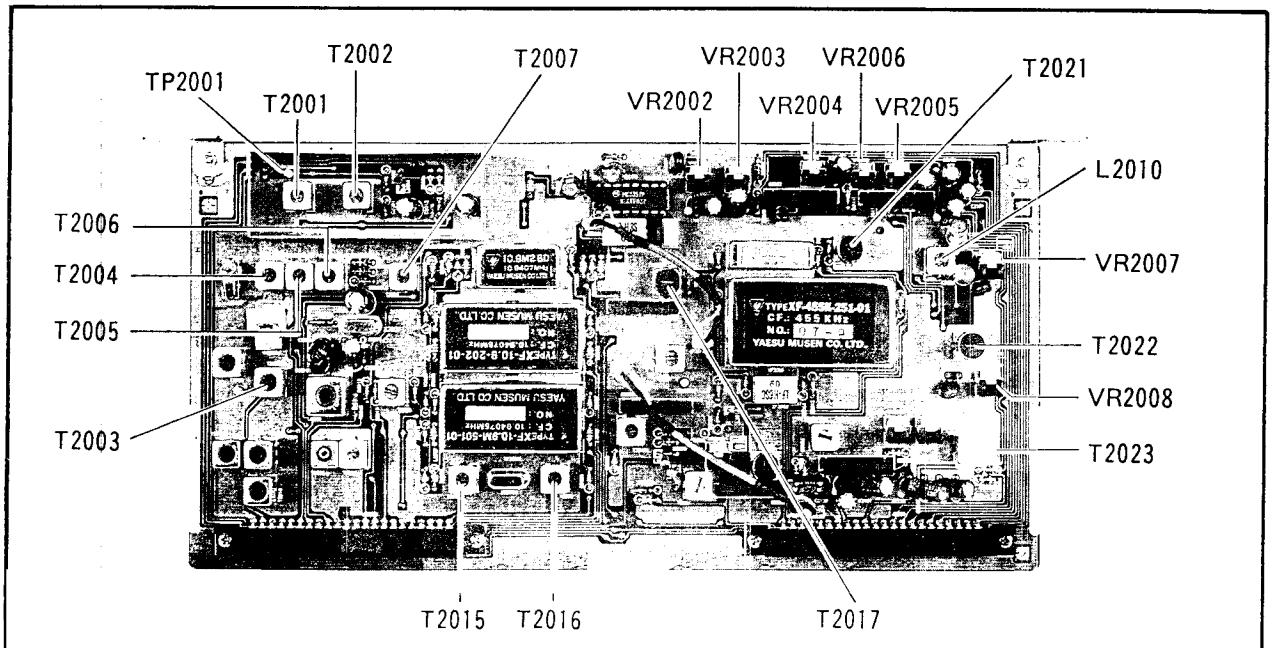

IF Unit: Receiver Test & Alignment Points

RF AGC, & S-Meter Calibration (RF Unit on Ext. Bd. #1)

❒ Connect the DC voltmeter to TP1001 on the RF Unit.

❒ Inject 100 dBμ at 14.200 MHz from the RF signal generator to the **ANT** jack, and adjust VR1011 on the RF Unit for 5.5 ± 0.1-V DC.

❒ Adjust VR2006 on the top edge of the IF Unit for S-9 + 60-dB on the S-meter.

Noise Blanker (IF Unit on Ext. Bd. #1)

❒ With the transceiver tuned to 14.2 MHz, press the **NB** button. Inject 20 dBμ at 14.2 MHz to the **ANT** jack, and connect the DC voltmeter to TP2001 on the IF Unit.

❒ Adjust T2001 and T2002 on the IF Unit for minimum voltage on the meter.

FM Detector Output Level

❒ Connect the AF millivoltmeter across an 8-Ω load to the **EXT SP** jack, and inject 40 dBμ at 14.200 MHz, without modulation, from the RF signal generator to the **ANT** jack.

❒ Select the USB mode, and tune the transceiver for a 1-kHz heterodyne. Note the millivoltmeter reading.

❒ Now switch to FM mode and modulate the signal generator output with ±1.765-kHz deviation of a 1-kHz tone (without changing the level).

❒ Adjust VR2003 on the top edge of the IF Unit for the same level on the millivoltmeter noted in the USB mode (within ± 1 dB).

SSB Squelch Threshold

In the USB mode, with no signal at the **ANT** jack, set the **SQL** control to the 11-o'clock position, and adjust VR2004 (IF Unit, top edge) so that the squelch just closes.

FM Squelch Threshold

In the FM mode, with no signal at the **ANT** jack, set the **SQL** control to the 10-o'clock position, and adjust VR2002 (IF Unit, top edge) so that the squelch just closes.

RTTY & PKT Jack Receiver AF Out Levels (AF Unit on Ext. Bd. #2)

❒ In the RTTY mode, inject 40 dBμ at 14.2 MHz to the **ANT** jack, and tune the transceiver for a 2000-Hz heterodyne.

❒ Connect a 600-Ω resistor in parallel with the AF millivoltmeter between pins 2 and 4 of the rear panel **RTTY** jack, and adjust VR3004 on the AF Unit for 60 ± 10 mV_{rms}.

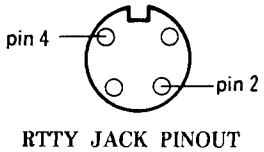

RTTY JACK PINOUT

❒ Now select the PKT-LSB mode, move the AF millivoltmeter and resistor to pins 2 and 4 of the **PKT** jack, and adjust VR-3006 on the AF Unit for 60 ± 10 mV_{rms} on the meter.

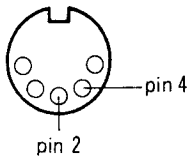

PACKET JACK PINOUT

AF OUT & DVS-2 Jack Receiver AF Out Levels (AF Unit on Ext. Bd. #2)

❒ In the USB mode, inject 40 dBμ at 14.2 MHz to the **ANT** jack, and tune the transceiver for a 1000-Hz heterodyne.

❒ Connect a 600-Ω resistor in parallel with the AF millivoltmeter across the rear panel **AF OUT** jack, and adjust VR3010 on the AF Unit for 100 ± 10 mV_{rms} on the meter.

❒ Now move the RF millivoltmeter and resistor to pins 2 and 7 of the **DVS-2** jack, and adjust VR3015 on the AF Unit for 2.5 ± 0.2 mV_{rms} on the meter.

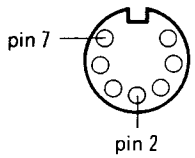

DVS-2 JACK PINOUT

Transmitter

Connect the 50-Ω dummy load to the **ANT** jack for all procedures.

Carrier Level (AF Unit on Ext. Bd. #2)

Tune to 12.200 MHz, USB mode. Connect the RF millivoltmeter to TP3003 on the AF Unit, then key the transmitter and adjust VR3019 on the AF Unit for 110 ± 5 mV_{rms}.

Transmitter IF Interstage Transformers (RF, then IF Unit on Ext. Bd. #1)

❒ With the inline wattmeter and 50-Ω dummy load connected to the **ANT** jack, set the **RF PWR** control fully ccw (minimum), and select the ALC meter function.

❒ Put the RF Unit on the Extender and, in the CW mode, key the transmitter and adjust T1001 and T1002, several times, for peak on the wattmeter (or ALC scale). If the ALC meter deflection is nil or full scale (and a wattmeter is not available), adjust VR1007 for midscale deflection.

❒ Move the Extender to the IF Unit, key the transmitter, and adjust T2010 ~ T2014, T2019 and T2020 (see photos next page) for peak on the wattmeter (or ALC scale). If ALC deflection is insufficient, connect the RF millivoltmeter to pin 11 of IF Unit board connector J2002 to adjust the IF Unit transformers.

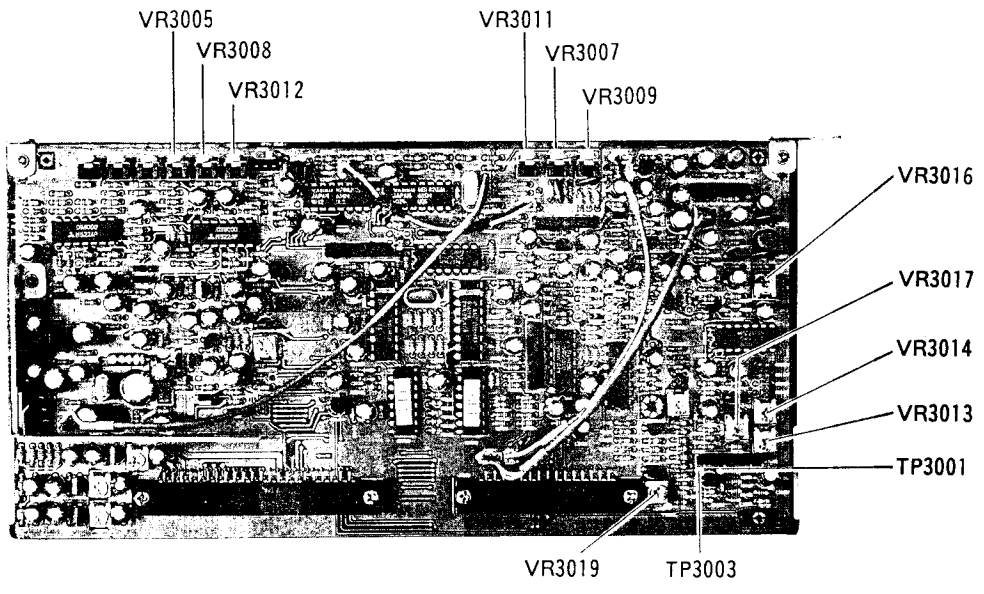

AF Unit: Transmitter Test & Alignment Points

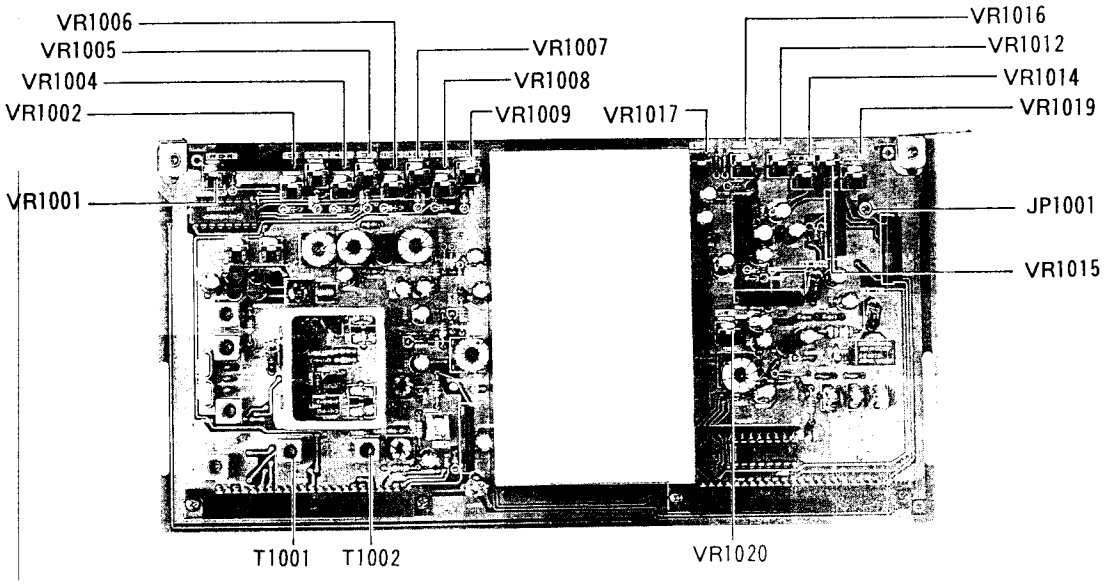

RF Unit: Transmitter Alignment Points

IC Meter Zero Set

❒ With the transceiver tuned to 14.0 MHz, USB mode, set the **MIC** control fully ccw (minimum), and set the **METER** selector to the **IC** position.

❒ Key the transmitter and adjust VR9003 on the Regulator Unit (see photo next page) so the meter deflects to S-1 to S-2 (on the S-meter scale).

Overcurrent ALC

❒ With the inline wattmeter and 50-Ω dummy load connected to the **ANT** jack, preset VR-1017 on the top edge of the RF Unit fully ccw, and VR9004 on the Regulator Unit fully clockwise. Also set the **RF PWR** control fully clockwise, and tune the transceiver to 14.200 MHz, CW mode.

❒ Key the transmitter and adjust VR9004 for 130 watts on the wattmeter. Perform the following procedure to realign VR1017.

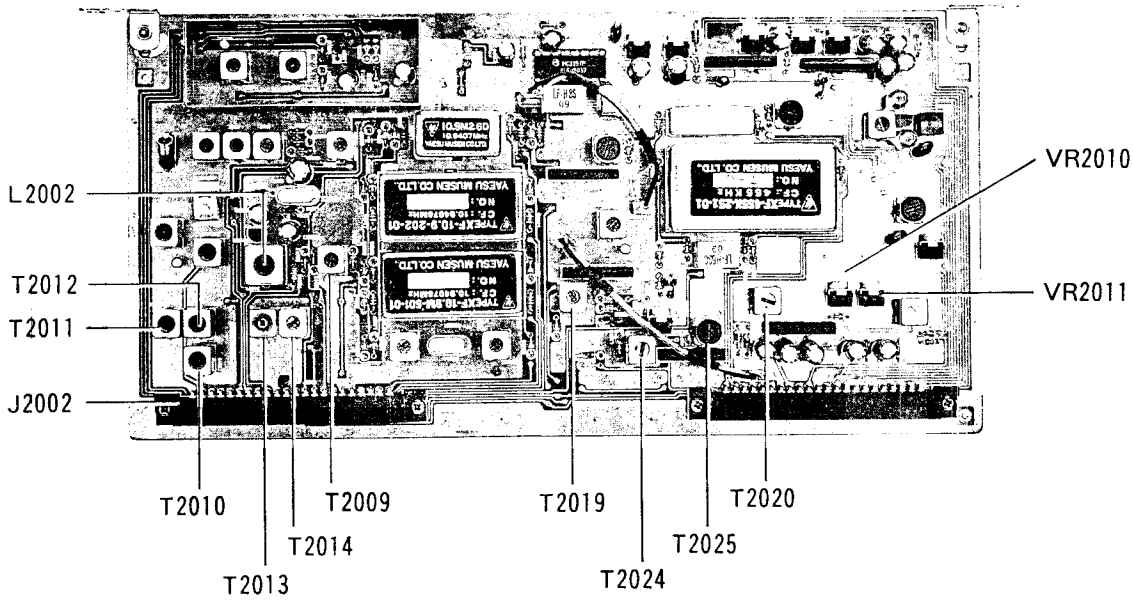

IF Unit: Transmitter Alignment Points

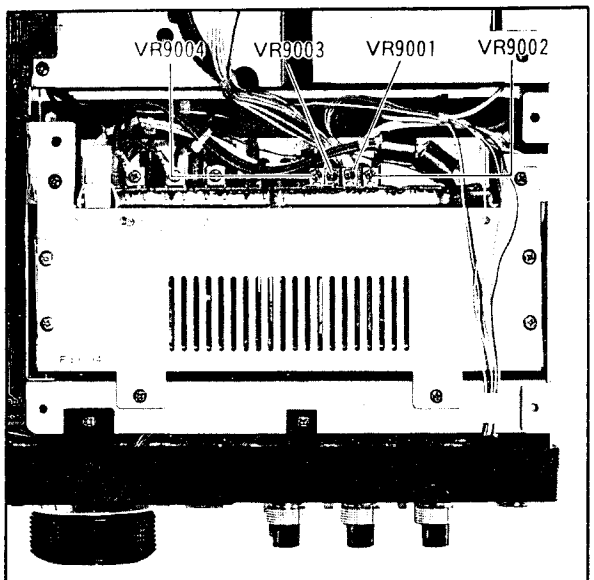

Reg. Unit: Transmitter Alignment Points

Forward ALC (Max RF Output)

Perform the previous procedure, and with the same setup, key the transmitter and adjust VR1017 on the top edge of the RF Unit for 100 to 110 watts on the wattmeter. Confirm that the ALC meter deflects.

AM Peak Output (AF Unit on Ext. Bd. #2)

With the transceiver tuned to 14.2 MHz, AM mode, and the wattmeter and 50-Ω dummy load connected to the **ANT** jack, set the **RF PWR** control fully clockwise. Key the transmitter and adjust VR1014 on the top edge of the RF Unit for 27 ± 1 watts output. If the ALC function of the meter does not deflect, adjust VR3013 on the AF Unit so that it does.

Reverse ALC (SWR Turndown)

Connect the inline wattmeter and a 16.6-Ω dummy load (or three 50-Ωs in parallel) to the **ANT** jack, and set the **RF PWR** control fully clockwise (maximum). With the transceiver set to the CW mode on 14.200 MHz, key the transmitter and adjust VR1016 (RF Unit, top edge) for 50 watts on the wattmeter.

Transmitter IF Gain I (14 MHz) (AF Unit on Ext. Bd. #2)

❒ Inject 3 mV of a 1-kHz audio tone from the AF generator to pin 8 of the **MIC** jack, and connect the AF millivoltmeter to TP3001 on the AF Unit.

❒ With the transceiver tuned to 14.2 MHz, USB mode, and the 50-Ω dummy load connected to the **ANT** jack, set the **RF PWR** control fully clockwise, and select the ALC meter function.

❒ Key the transmitter and adjust the **MIC** gain control for 30 mV at TP3001, then adjust VR1007 on the top edge of the RF Unit so that the ALC meter just begins to deflect.

ALC Meter Calibration

❒ With the transceiver tuned to 14.2 MHz, USB mode, set the **METER** selector to **ALC**, and inject 30 mV at 1 kHz to pin 8 of the **MIC** jack with the AF signal generator.

❒ Key the transmitter and adjust VR1019 on the top edge of the RF Unit so that the ALC meter deflects to the top edge of the ALC zone (S-9 on the S-meter scale).

PO Meter Calibration (RF Unit on Ext. Bd. #1)

With the inline wattmeter and 50-Ω dummy load connected to the **ANT** jack, and the transceiver tuned to 14.2 MHz, CW mode, set the **METER** selector to the **PO** position. Key the transmitter and adjust VR1020 on the RF Unit so that the PO meter indication matches the wattmeter with 100 watts output.

SSB Modulator Balance (AF Unit on Ext. Bd. #2)

With the transceiver tuned to 14.2 MHz, USB mode, connect the 50-dB attenuator and spectrum analyzer (or 50-Ω dummy load and sampling coupler) to the **ANT** jack. Alternatively, a separate receiver can be used, with the transceiver connected to the dummy load. Set the **MIC** control fully ccw (minimum), and adjust VR3017 on the AF Unit for minimum power output (carrier leakage) as indicated on the analyzer or external receiver.

CW Carrier Level (AF Unit on Ext. Bd. #2)

With the transceiver tuned to 14.2 MHz, CW mode, and the wattmeter and 50-Ω dummy load connected to the **ANT** jack, set the **RF PWR** control fully clockwise, and select the ALC meter function. Key the transmitter

and adjust VR3014 on the AF Unit for maximum deflection on the meter.

AM Carrier Level (AF Unit on Ext. Bd. #2)

With the transceiver tuned to 14.2 MHz, AM mode, and the wattmeter and 50-Ω dummy load connected to the **ANT** jack, set the **RF PWR** control fully clockwise, and select the ALC meter function. Key the transmitter and adjust VR3013 on the AF Unit for maximum deflection on the meter.

AM Modulation Level (AF Unit on Ext. Bd. #2)

Connect the 50-dB attenuator and oscilloscope to the **ANT** jack, and set the **RF PWR** and **MIC** gain controls fully clockwise. Inject 10 mV at 1 kHz to pin 8 of the **MIC** jack with the AF signal generator.

With the transceiver tuned to 14.2 MHz, AM mode, key the transmitter and adjust VR3016 on the AF Unit for 100% modulation on the oscilloscope.

Tx AFSK Tone Level

With the transceiver tuned to 14.2 MHz, RTTY-LSB mode, and the wattmeter and 50-Ω dummy load connected to the **ANT** jack, set the **RF PWR** control fully CW (maximum). Set the **METER** selector to **ALC**, key the transmitter, and adjust VR3007 on the top edge of the AF Unit so that the meter indicates at the top edge of the blue ALC zone (S-9 on the S-meter scale).

Transmitter IF Gain II

❒ With the transceiver set to CW mode, and the 50-Ω dummy load connected to the **ANT** jack, set the **RF PWR** control fully clockwise, and select the ALC meter function.

❒ Tune to each of the following frequencies, key the transmitter and adjust the corresponding potentiometer on the top edge of the RF Unit for peak ALC deflection.

Tune to ...	and adjust ...
1.840 MHz	VR1001
3.750 MHz	VR1002
7.050 MHz	VR1004
10.125 MHz	VR1006
21.200 MHz	VR1008
29.000 MHz	VR1009

Transmitter Frequency (IF Unit on Ext. Bd. #1)

Connect the 50-dB attenuator and frequency counter to the **ANT** jack. Tune to 29.000 MHz, FM mode, key the transmitter and adjust L2002 on the IF Unit so that the difference between transceiver display and the frequency counter is less than 50 Hz.

FM & CTCSS Deviation

❒ Connect the attenuator and linear detector to the **ANT** jack. Tune to 29.000 MHz, FM mode, and set the **FM MIC GAIN** (inside the top access panel) to the 12-o'clock position.

❒ Inject 10 mV at 1 kHz from the AF generator to pin 8 of the **MIC** jack, key the transmitter, and adjust VR3008 on the top edge of the AF Unit for ± 2.3-kHz deviation (± 100 Hz).

❒ Remove the AF injection, press the **RPT** button (to activate the CTCSS tone generator), and adjust VR3012 on the top edge of the AF Unit for ± 0.5-kHz deviation (± 100 Hz).

❒ Repeat both adjustments several times.

FM Mic Gain (in Top Panel Access)

❒ With the attenuator and linear detector connected to the **ANT** jack, and with the transceiver tuned to 29.000 MHz, FM mode, inject 1.5 mV at 1 kHz from the AF generator to pin 8 of the **MIC** jack.

Key the transmitter and adjust the **FM MIC GAIN** (VR3005 on the AF Unit, inside the top access panel) for ± 1.75-kHz deviation (± 100 Hz).

Speech Processor (IF Unit on Ext. Bd. #1)

❒ Set the **RF PWR** control fully clockwise, and the **PROC** and **MIC** controls to their 12-o'clock positions, and select the USB mode on 14.2 MHz. Select the ALC meter function, and press the **PROC** button to activate the speech processor.

❒ Inject 10 mV audio at 1 kHz to pin 8 of the **MIC** jack with the AF signal generator, key the transmitter and adjust T2024 on the IF Unit for peak meter deflection (adjust the **PROC** control setting, if necessary, to maintain deflection just below mid-scale).

❒ Adjust the **PROC** control so the meter deflects just below mid-scale, and adjust T2025 on the IF Unit for peak deflection (reduce the **PROC** control setting, if necessary, to maintain deflection just below mid-scale).

❒ Turn the **PROC** control fully clockwise and adjust T2009 on the IF Unit for peak ALC meter deflection.

COMP Meter Calibration (IF Unit on Ext. Bd. #1)

❒ With the same test equipment setup as in the previous step (14.2 MHz, USB mode, ALC meter selection), set the **PROC** control to the 12-o'clock position, and set the **MIC** gain control fully clockwise.

❒ Inject 3 mV audio at 1 kHz to pin 8 of the **MIC** jack with the AF signal generator.

❒ Key the transmitter and adjust the **RF PWR** control so the ALC indication on the meter deflects to the 100-watt marking on the PO scale. The adjust the **MIC** gain control so the ALC indication on the meter deflects to the 50-watt marking on the PO scale.

❒ Switch the meter to the **COMP** scale and adjust VR2011 on the IF Unit so the meter just begins to deflect.

❒ Increase the AF injection to 30 mV, and adjust VR2010 for 20-dB indication on the **COMP** scale.

VCC Meter Calibration

Set the **METER** selector to the **VCC** position. In the USB mode, with no microphone input, press the **MOX** button and adjust VR9002 on the Regulator Unit so that the transceiver's meter deflects to the 13.5-volt mark on the VCC scale.

IC Meter Calibration

Set the transceiver to CW mode at 14.200 MHz, and set the **RF PWR** control fully clockwise. Set the **METER** selector to the **IC** position, and adjust VR9001 on the Regulator Unit so that the transceiver's meter deflects to the 16-amp mark on the IC scale.

Antenna Tuner Power

Tuned to 14.2 MHz with the wattmeter and dummy load connected, set the **RF PWR** control fully ccw (minimum). Press the **START** button and, while the tuner has the transmitter activated, adjust VR1012 on the top edge of the RF Unit, if necessary, for 5 ± 0.5 W output.

Transmitter Carrier Point

❒ Connect the AF signal generator to pin 8 of the **MIC** jack, and set the transceiver to LSB mode. Set the **MIC** gain and **RF PWR** controls fully CW (maximum). Key the transmitter and adjust the AF injection *frequency* for maximum output power, and then adjust the injection *level* for 80 watts output.

❒ Tune the AF generator to 350 Hz, and adjust rotary selector S5002 (on the Control Unit, accessible from the top panel) for 20 watts output.

❒ Now select the USB mode and adjust selector S5003 for 20 watts output.

❒ Retune the AF generator to 2600 Hz, and confirm at least 20 watts output in both LSB and USB modes.

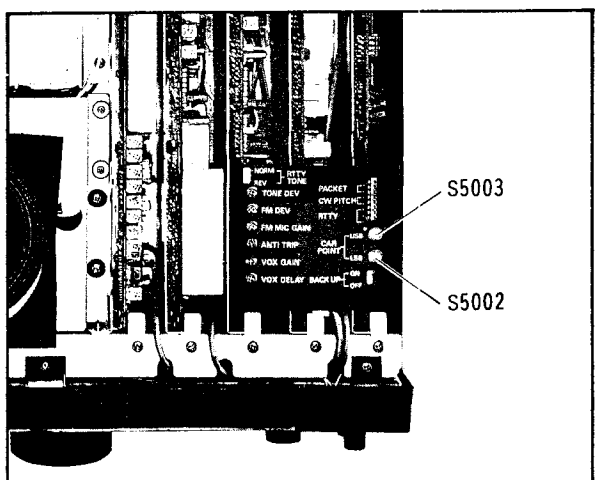

SSB Carrier Point Selectors

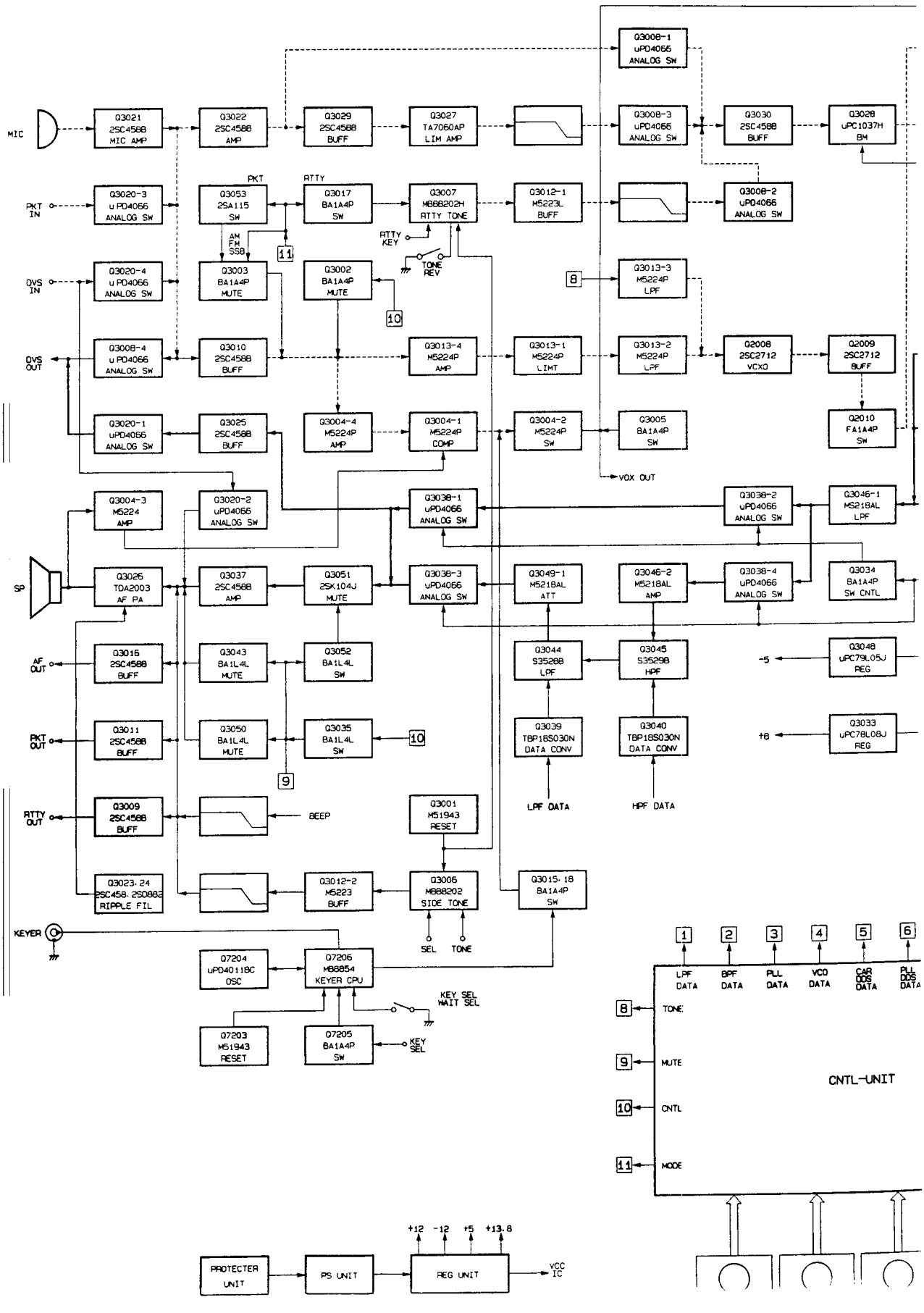
MIC
Q3021 2SC4588 MIC AMP
Q3022 2SC4588 AMP
Q3029 2SC4588 BUFF
Q3027 TA7060AP LIM AMP
Q3008-1 uPD4066 ANALOG SW
Q3008-3 uPD4066 ANALOG SW
Q3030 2SC4588 BUFF
Q3028 uPC1037H BM
PKT IN
Q3020-3 u PD4066 ANALOG SW
PKT
RTTY
Q3053 2SA115 SW
Q3017 BA1A4P SW
Q3007 M88202H RTTY TONE
Q3012-1 M5223L BUFF
Q3008-2 uPD4066 ANALOG SW
AM FM SSB
11
RTTY KEY
TONE REV
OVS IN
Q3020-4 u PD4066 ANALOG SW
Q3003 BA1A4P MUTE
Q3002 BA1A4P MUTE
8
Q3013-3 M5224P LPF
10
OVS OUT
Q3008-4 u PD4066 ANALOG SW
Q3010 2SC4588 BUFF
Q3013-4 M5224P AMP
Q3013-1 M5224P LIMT
Q3013-2 M5224P LPF
Q2008 2SC2712 VCXO
Q2009 2SC2712 BUFF
Q3020-1 uPD4066 ANALOG SW
Q3025 2SC4588 BUFF
Q3004-4 M5224P AMP
Q3004-1 M5224P COMP
Q3004-2 M5224P SW
Q3005 BA1A4P SW
Q2010 FA1A4P SW
VOX OUT
Q3004-3 M5224 AMP
Q3020-2 uPD4066 ANALOG SW
Q3038-1 uPD4066 ANALOG SW
Q3038-2 uPD4066 ANALOG SW
Q3046-1 MS218AL LPF
SP
Q3026 TDA2003 AF PA
Q3037 2SC4588 AMP
Q3051 2SK104J MUTE
Q3038-3 uPD4066 ANALOG SW
Q3049-1 M5218AL ATT
Q3046-2 M5218AL AMP
Q3038-4 uPD4066 ANALOG SW
Q3034 BA1A4P SW CNTL
AF OUT
Q3016 2SC4588 BUFF
Q3043 BA1L4L MUTE
Q3052 BA1L4L SW
Q3044 S35288 LPF
Q3045 S35298 HPF
-5
Q3048 uPC79L05J REG
PKT OUT
Q3011 2SC4588 BUFF
Q3050 BA1L4L MUTE
Q3035 BA1L4L SW
10
Q3039 TBP18S030N DATA CONV
Q3040 TBP18S030N DATA CONV
+8
Q3033 uPC78L08J REG
9
RTTY OUT
Q3009 2SC4588 BUFF
BEEP
Q3001 M51943 RESET
LPF DATA
HPF DATA
Q3023, 24 2SC458, 2SD882 RIPPLE FIL
Q3012-2 M5223 BUFF
Q3006 M88202 SIDE TONE
Q3015, 18 BA1A4P SW
KEYER
SEL
TONE
Q7204 uPD4011BC OSC
Q7206 M88854 KEYER CPU
KEY SEL WAIT SEL
Q7203 M51943 RESET
Q7205 BA1A4P SW
KEY SEL
1
2
3
4
5
6
LPF DATA
BPF DATA
PLL DATA
VCO DATA
CAR DDS DATA
PLL DDS DATA
8
TONE
9
MUTE
10
CNTL
11
MODE
CNTL-UNIT
+12
-12
+5
+13.8
PROTECTER UNIT
PS UNIT
REG UNIT
VCC IC

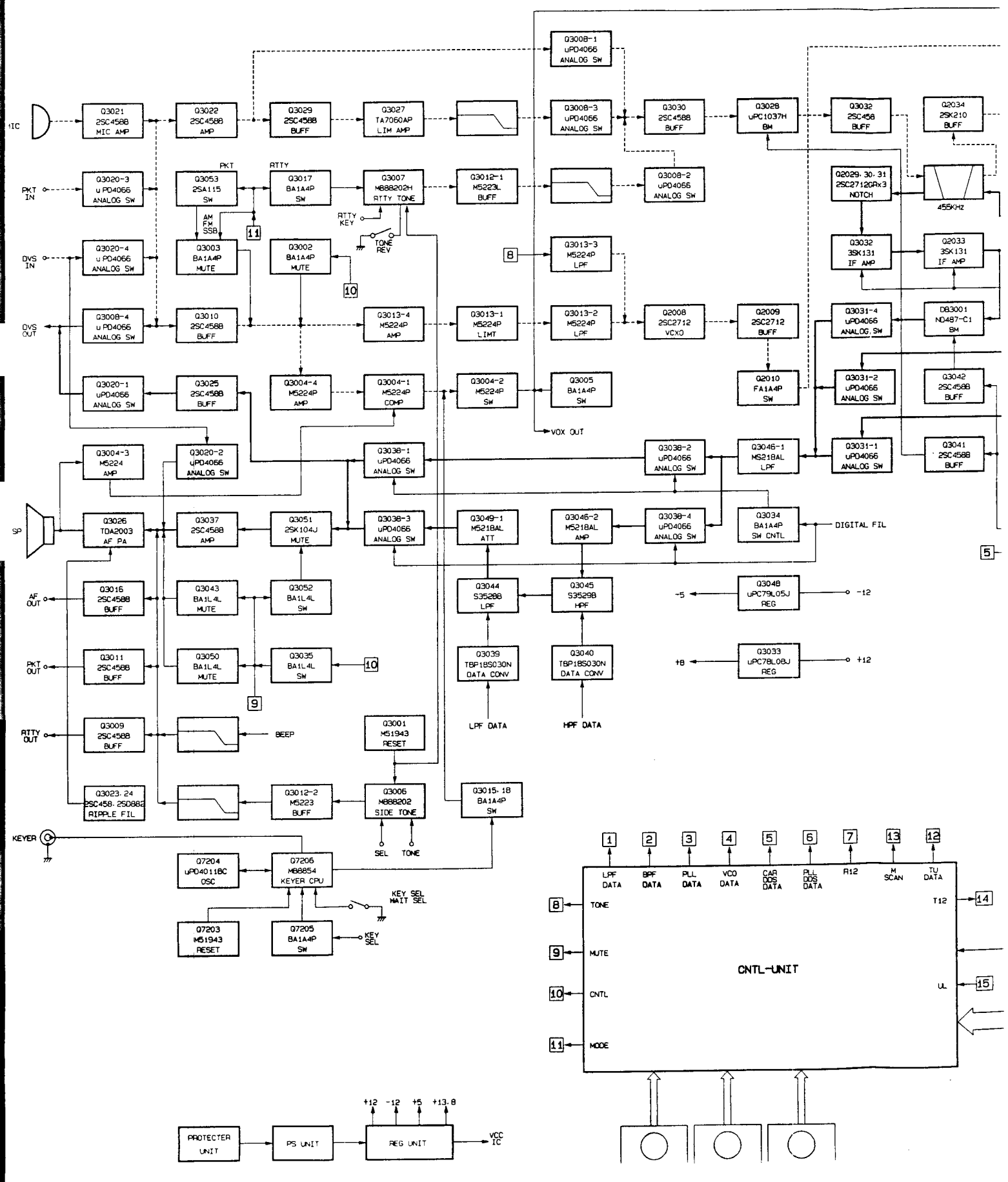
Q3021 2SC4588 MIC AMP
Q3022 2SC4588 AMP
Q3029 2SC4588 BUFF
Q3027 TA7060AP LIM AMP
Q3008-1 uPD4066 ANALOG SW
Q3008-3 uPD4066 ANALOG SW
Q3030 2SC4588 BUFF
Q3028 uPC1037H BM
Q3032 2SC458 BUFF
Q2034 2SK210 BUFF
PKT IN
Q3020-3 u PD4066 ANALOG SW
PKT
Q3053 2SA115 SW
RTTY
Q3017 BA1A4P SW
Q3007 M888202H RTTY TONE
Q3012-1 M5223L BUFF
Q3008-2 uPD4066 ANALOG SW
Q2029. 30. 31 2SC2712GRx3 NOTCH
455KHz
AM FM SSB
11
RTTY KEY
TONE REV
DVS IN
Q3020-4 u PD4066 ANALOG SW
Q3003 BA1A4P MUTE
Q3002 BA1A4P MUTE
8
Q3013-3 M5224P LPF
Q3032 3SK131 IF AMP
Q2033 3SK131 IF AMP
10
DVS OUT
Q3008-4 u PD4066 ANALOG SW
Q3010 2SC4588 BUFF
Q3013-4 M5224P AMP
Q3013-1 M5224P LIMT
Q3013-2 M5224P LPF
Q2008 2SC2712 VCXO
Q2009 2SC2712 BUFF
Q3031-4 uPD4066 ANALOG SW
DB3001 ND487-C1 BM
Q3020-1 uPD4066 ANALOG SW
Q3025 2SC4588 BUFF
Q3004-4 M5224P AMP
Q3004-1 M5224P COMP
Q3004-2 M5224P SW
Q3005 BA1A4P SW
Q2010 FA1A4P SW
Q3031-2 uPD4066 ANALOG SW
Q3042 2SC4588 BUFF
VOX OUT
Q3004-3 M5224 AMP
Q3020-2 uPD4066 ANALOG SW
Q3038-1 uPD4066 ANALOG SW
Q3038-2 uPD4066 ANALOG SW
Q3046-1 MS218AL LPF
Q3031-1 uPD4066 ANALOG SW
Q3041 2SC4588 BUFF
SP
Q3026 TDA2003 AF PA
Q3037 2SC4588 AMP
Q3051 2SK104U MUTE
Q3038-3 uPD4066 ANALOG SW
Q3049-1 M5218AL ATT
Q3046-2 M5218AL AMP
Q3038-4 uPD4066 ANALOG SW
Q3034 BA1A4P SW CNTL
DIGITAL FIL
5
AF OUT
Q3016 2SC4588 BUFF
Q3043 BA1L4L MUTE
Q3052 BA1L4L SW
Q3044 S35288 LPF
Q3045 S35298 HPF
-5
Q3048 uPC79L05J REG
-12
PKT OUT
Q3011 2SC4588 BUFF
Q3050 BA1L4L MUTE
Q3035 BA1L4L SW
10
9
Q3039 TBP18S030N DATA CONV
Q3040 TBP18S030N DATA CONV
+8
Q3033 uPC78L08J REG
+12
RTTY OUT
Q3009 2SC4588 BUFF
BEEP
Q3001 M51943 RESET
LPF DATA
HPF DATA
Q3023. 24 2SC458. 2SD882 RIPPLE FIL
Q3012-2 M5223 BUFF
Q3006 M888202 SIDE TONE
Q3015. 18 BA1A4P SW
KEYER
SEL
TONE
Q7204 uPD4011BC OSC
Q7206 M88854 KEYER CPU
KEY SEL MAIT SEL
Q7203 M51943 RESET
Q7205 BA1A4P SW
KEY SEL
1
2
3
4
5
6
7
13
12
LPF DATA
BPF DATA
PLL DATA
VCO DATA
CAR DDS DATA
PLL DDS DATA
R12
M SCAN
TU DATA
8
TONE
T12
14
9
MUTE
CNTL-UNIT
10
CNTL
UL
15
11
MODE
+12
-12
+5
+13.8
PROTECTER UNIT
PS UNIT
REG UNIT
VCC IC

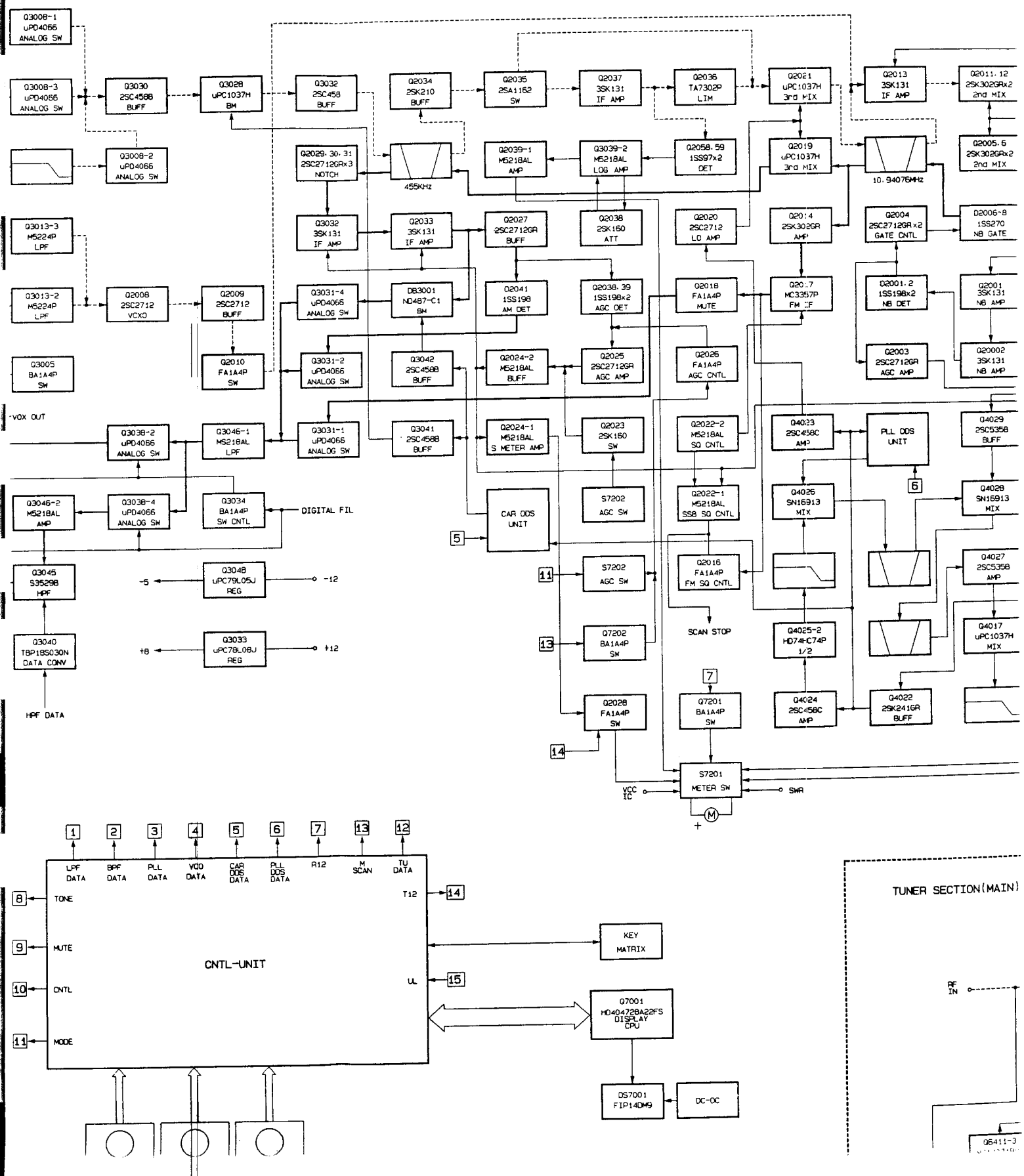
Q3008-1 uPD4066 ANALOG SW
Q3008-3 uPD4066 ANALOG SW
Q3008-2 uPD4066 ANALOG SW
Q3030 2SC4588 BUFF
Q3028 uPC1037H BM
Q3032 2SC458 BUFF
Q2034 2SK210 BUFF
Q2035 2SA1162 SW
Q2037 3SK131 IF AMP
Q2036 TA7302P LIM
Q2021 uPC1037H 3rd MIX
Q2013 3SK131 IF AMP
Q2011.12 2SK302GRx2 2nd MIX
Q2005.6 2SK302GRx2 2nd MIX
Q2029.30.31 2SC2712GRx3 NOTCH
455KHz
Q2039-1 M5218AL AMP
Q3039-2 M5218AL LOG AMP
Q2058.59 1SS97x2 DET
Q2019 uPC1037H 3rd MIX
10.94076MHz
Q3013-3 M5224P LPF
Q3032 3SK131 IF AMP
Q2033 3SK131 IF AMP
Q2027 2SC2712GR BUFF
Q2038 2SK160 ATT
Q2020 2SC2712 LO AMP
Q20:4 2SK302GR AMP
Q2004 2SC2712GRx2 GATE CNTL
D2006-8 1SS270 NB GATE
Q3013-2 M5224P LPF
Q2008 2SC2712 VCXO
Q2009 2SC2712 BUFF
Q3031-4 uPD4066 ANALOG SW
DB3001 ND487-C1 BM
Q2041 1SS198 AM DET
Q2038.39 1SS198x2 AGC DET
Q2018 FA1A4P MUTE
Q20:7 MC3357P FM IF
Q2001.2 1SS198x2 NB DET
Q2001 3SK131 NB AMP
Q3005 BA1A4P SW
Q2010 FA1A4P SW
Q3031-2 uPD4066 ANALOG SW
Q3042 2SC4588 BUFF
Q2024-2 M5218AL BUFF
Q2025 2SC2712GR AGC AMP
Q2026 FA1A4P AGC CNTL
Q2003 2SC2712GR AGC AMP
D20002 3SK131 NB AMP
VOX OUT
Q3038-2 uPD4066 ANALOG SW
Q3046-1 M5218AL LPF
Q3031-1 uPD4066 ANALOG SW
Q3041 2SC4588 BUFF
Q2024-1 M5218AL S METER AMP
Q2023 2SK160 SW
Q2022-2 M5218AL SQ CNTL
Q4023 2SC4588 AMP
PLL DDS UNIT
Q4029 2SC5358 BUFF
Q3046-2 M5218AL AMP
Q3038-4 uPD4066 ANALOG SW
Q3034 BA1A4P SW CNTL
DIGITAL FIL
CAR DDS UNIT
S7202 AGC SW
Q2022-1 M5218AL SSB SQ CNTL
Q4026 SN16913 MIX
Q4028 SN16913 MIX
Q3045 S35298 HPF
Q3048 uPC79L05J REG
-5
-12
S7202 AGC SW
Q2016 FA1A4P FM SQ CNTL
Q4027 2SC5358 AMP
Q3040 TBP18S030N DATA CONV
Q3033 uPC78L08J REG
+8
+12
Q7202 BA1A4P SW
SCAN STOP
Q4025-2 HD74HC74P 1/2
Q4017 uPC1037H MIX
HPF DATA
Q2028 FA1A4P SW
Q7201 BA1A4P SW
Q4024 2SC458C AMP
Q4022 2SK241GR BUFF
S7201 METER SW
VCC IC
SWR
LPF DATA
BPF DATA
PLL DATA
VCO DATA
CAR DDS DATA
PLL DDS DATA
R12
M SCAN
TU DATA
T12
UL
TONE
MUTE
CNTL
MODE
CNTL-UNIT
KEY MATRIX
Q7001 MD4072BA22FS DISPLAY CPU
DS7001 FIP14DM9
DC-DC
TUNER SECTION(MAIN)
RF IN
Q6411-3

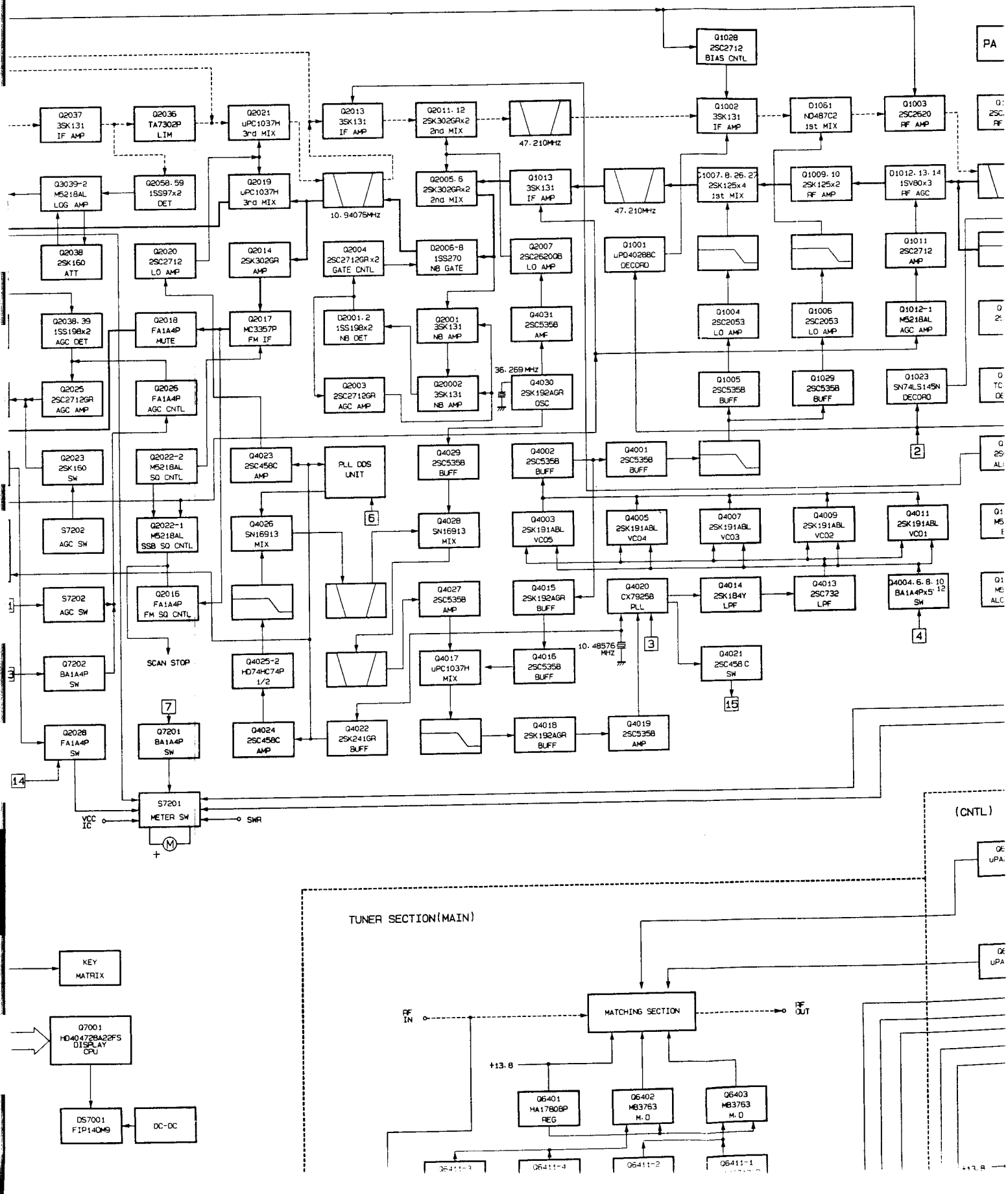
Q1028 2SC2712 BIAS CNTL
PA
Q2037 3SK131 IF AMP
Q2036 TA7302P LIM
Q2021 uPC1037H 3rd MIX
Q2013 3SK131 IF AMP
Q2011.12 2SK302GRx2 2nd MIX
47.210MHz
Q1002 3SK131 IF AMP
D1051 ND487C2 1st MIX
Q1003 2SC2620 RF AMP
Q3039-2 M5218AL LOG AMP
Q2058.59 1SS97x2 DET
Q2019 uPC1037H 3rd MIX
10.94075MHz
Q2005.6 2SK302GRx2 2nd MIX
Q1013 3SK131 IF AMP
47.210MHz
Q1007.8.26.27 2SK125x4 1st MIX
Q1009.10 2SK125x2 RF AMP
D1012.13.14 1SV80x3 RF AGC
Q2038 2SK160 ATT
Q2020 2SC2712 LO AMP
Q2014 2SK302GR AMP
Q2004 2SC2712GRx2 GATE CNTL
D2006-8 1SS270 NB GATE
Q2007 2SC2620B LO AMP
Q1001 uPD4028BC DECORD
Q1011 2SC2712 AMP
Q2038.39 1SS198x2 AGC DET
Q2018 FA1A4P MUTE
Q2017 MC3357P FM IF
D2001.2 1SS198x2 NB DET
Q2001 3SK131 NB AMP
Q4031 2SC5358 AMP
Q1004 2SC2053 LO AMP
Q1006 2SC2053 LO AMP
Q1012-1 M5218AL AGC AMP
Q2025 2SC2712GR AGC AMP
Q2026 FA1A4P AGC CNTL
Q2003 2SC2712GR AGC AMP
Q20002 3SK131 NB AMP
36.269MHz
Q4030 2SK192AGR OSC
Q1005 2SC5358 BUFF
Q1029 2SC5358 BUFF
Q1023 SN74LS145N DECORD
2
Q2023 2SK160 SW
Q2022-2 M5218AL SQ CNTL
Q4023 2SC458C AMP
PLL DDS UNIT
Q4029 2SC5358 BUFF
Q4002 2SC5358 BUFF
Q4001 2SC5358 BUFF
S7202 AGC SW
Q2022-1 M5218AL SSB SQ CNTL
Q4026 SN16913 MIX
6
Q4028 SN16913 MIX
Q4003 2SK191ABL VCO5
Q4005 2SK191ABL VCO4
Q4007 2SK191ABL VCO3
Q4009 2SK191ABL VCO2
Q4011 2SK191ABL VCO1
S7202 AGC SW
Q2016 FA1A4P FM SQ CNTL
Q4027 2SC5358 AMP
Q4015 2SK192AGR BUFF
Q4020 CX79258 PLL
Q4014 2SK184Y LPF
Q4013 2SC732 LPF
Q4004.6.8.10 BA1A4Px5 SW
4
10.48576 MHz
3
Q7202 BA1A4P SW
SCAN STOP
Q4025-2 HD74HC74P 1/2
Q4017 uPC1037H MIX
Q4016 2SC5358 BUFF
Q4021 2SC458C SW
15
7
Q2028 FA1A4P SW
Q7201 BA1A4P SW
Q4024 2SC458C AMP
Q4022 2SK241GR BUFF
Q4018 2SK192AGR BUFF
Q4019 2SC5358 AMP
14
S7201 METER SW
VCC IC
SWR
(CNTL)
TUNER SECTION(MAIN)
KEY MATRIX
Q7001 HD404728A22FS DISPLAY CPU
DS7001 FIP14DM9
DC-DC
RF IN
MATCHING SECTION
RF OUT
+13.8
Q6401 HA17808P REG
Q6402 MB3763 M.D
Q6403 MB3763 M.D

Block Diagram

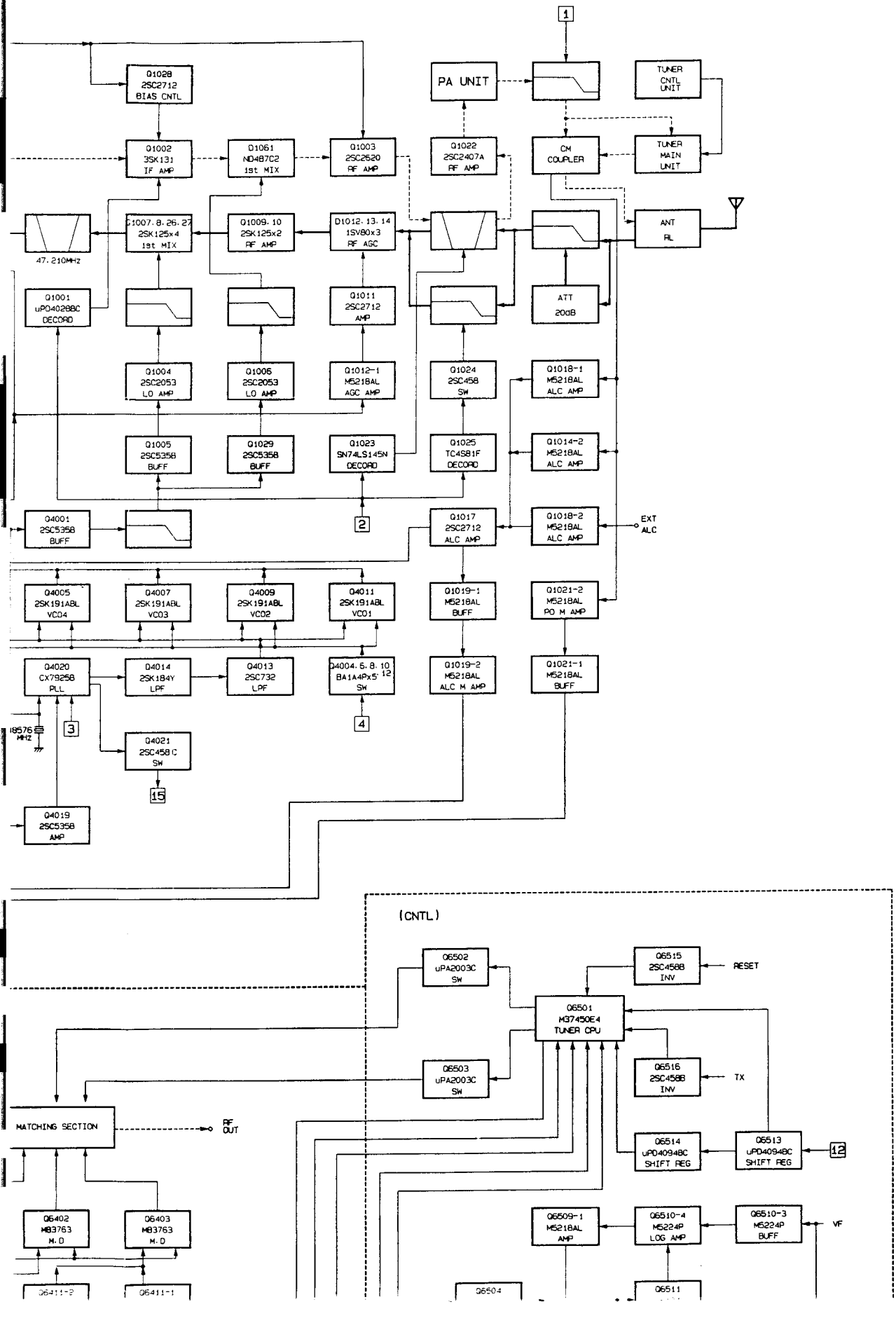

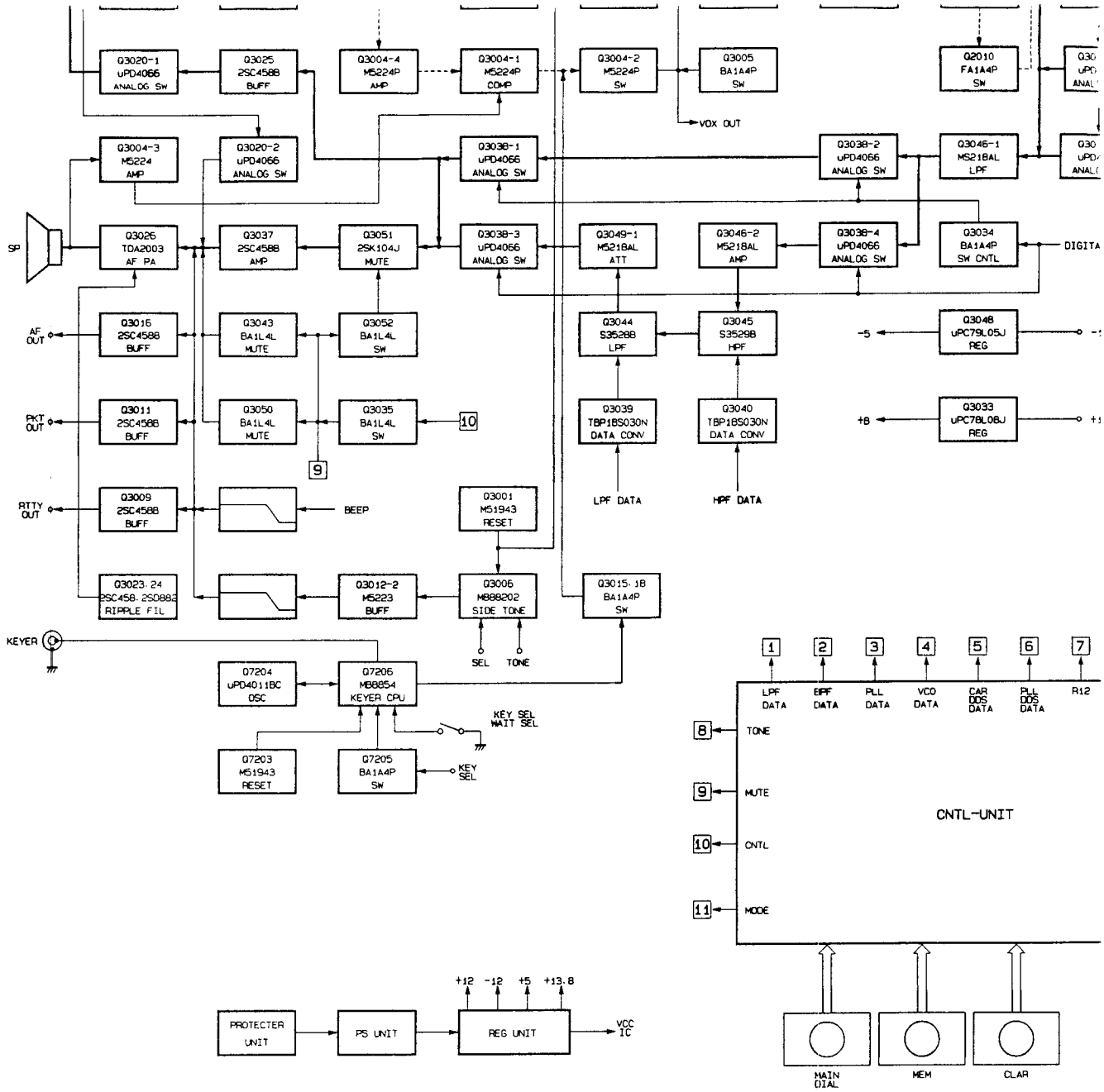
Q3020-1 uPD4066 ANALOG SW
Q3025 2SC4588 BUFF
Q3004-4 M5224P AMP
Q3004-1 M5224P COMP
Q3004-2 M5224P SW
Q3005 BA1A4P SW
VOX OUT
Q2010 FA1A4P SW
Q3004-3 M5224 AMP
Q3020-2 uPD4066 ANALOG SW
Q3038-1 uPD4066 ANALOG SW
Q3038-2 uPD4066 ANALOG SW
Q3046-1 MS21BAL LPF
SP
Q3026 TDA2003 AF PA
Q3037 2SC4588 AMP
Q3051 2SK104J MUTE
Q3038-3 uPD4066 ANALOG SW
Q3049-1 M5218AL ATT
Q3046-2 M5218AL AMP
Q3038-4 uPD4066 ANALOG SW
Q3034 BA1A4P SW CNTL
DIGITA
AF OUT
Q3016 2SC4588 BUFF
Q3043 BA1L4L MUTE
Q3052 BA1L4L SW
Q3044 S35288 LPF
Q3045 S35298 HPF
-5
Q3048 uPC79L05J REG
PKT OUT
Q3011 2SC4588 BUFF
Q3050 BA1L4L MUTE
Q3035 BA1L4L SW
10
9
Q3039 TBP18S030N DATA CONV
Q3040 TBP18S030N DATA CONV
+8
Q3033 uPC78L08J REG
RTTY OUT
Q3009 2SC4588 BUFF
BEEP
Q3001 M51943 RESET
LPF DATA
HPF DATA
Q3023, 24 2SC458, 2SD882 RIPPLE FIL
Q3012-2 M5223 BUFF
Q3006 M88802 SIDE TONE
Q3015, 18 BA1A4P SW
KEYER
SEL
TONE
Q7204 uPD4011BC OSC
Q7206 M88854 KEYER CPU
KEY SEL WAIT SEL
Q7203 M51943 RESET
Q7205 BA1A4P SW
KEY SEL
1 2 3 4 5 6 7
LPF DATA
BPF DATA
PLL DATA
VCO DATA
CAR DDS DATA
PLL DDS DATA
R12
8 TONE
9 MUTE
10 CNTL
11 MODE
CNTL-UNIT
+12 -12 +5 +13.8
PROTECTER UNIT
PS UNIT
REG UNIT
VCC IC
MAIN DIAL
MEM
CLAR

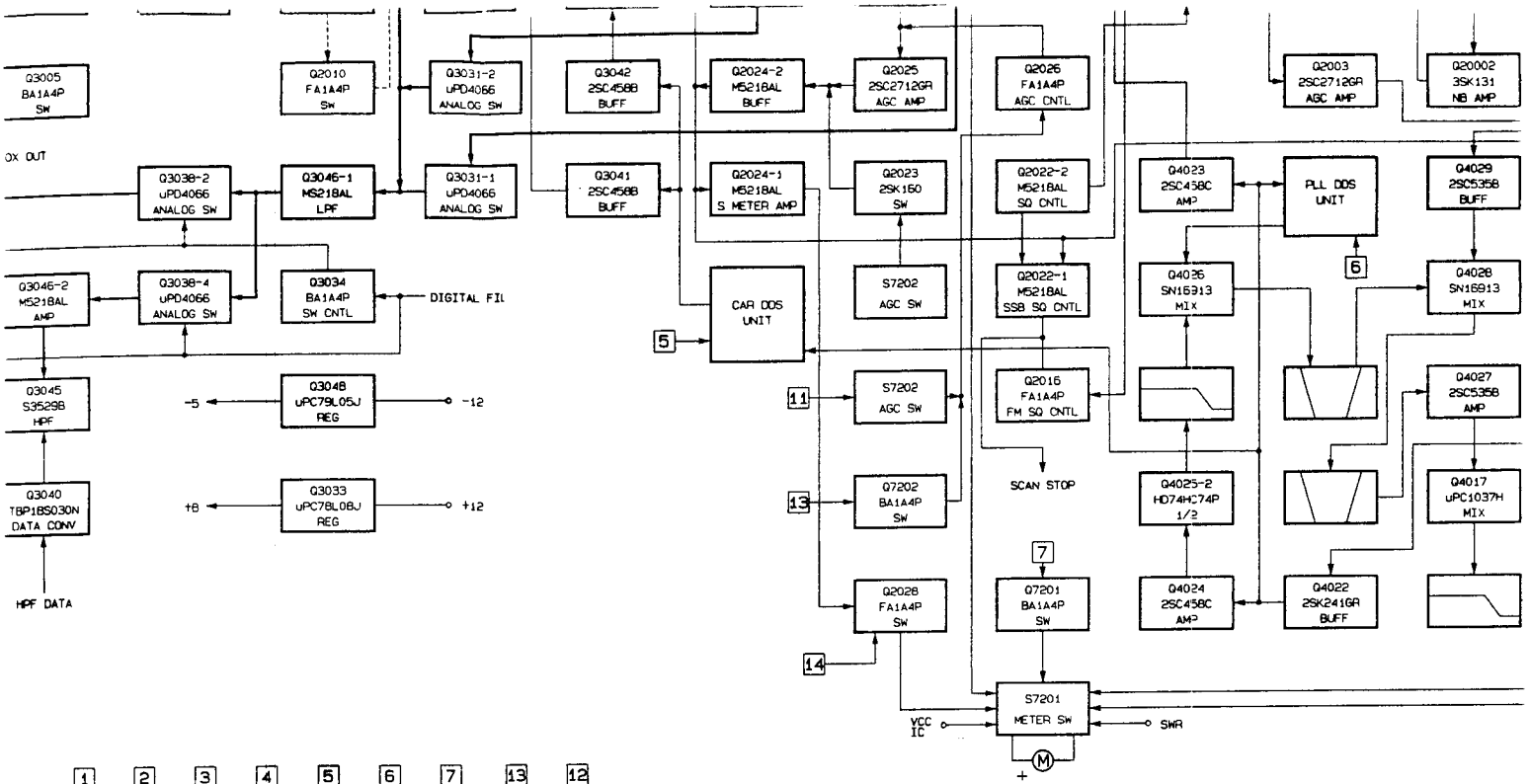
Q3005 BA1A4P SW
Q2010 FA1A4P SW
Q3031-2 uPD4066 ANALOG SW
Q3042 2SC458B BUFF
Q2024-2 M5218AL BUFF
Q2025 2SC2712GR AGC AMP
Q2026 FA1A4P AGC CNTL
Q2003 2SC2712GR AGC AMP
Q20002 3SK131 NB AMP
ox OUT
Q3038-2 uPD4066 ANALOG SW
Q3046-1 MS218AL LPF
Q3031-1 uPD4066 ANALOG SW
Q3041 2SC458B BUFF
Q2024-1 M5218AL S METER AMP
Q2023 2SK160 SW
Q2022-2 M5218AL SQ CNTL
Q4023 2SC458C AMP
PLL DDS UNIT
Q4029 2SC535B BUFF
Q3046-2 M5218AL AMP
Q3038-4 uPD4066 ANALOG SW
Q3034 BA1A4P SW CNTL
DIGITAL FIL
CAR DDS UNIT
S7202 AGC SW
Q2022-1 M5218AL SSB SQ CNTL
Q4026 SN16913 MIX
Q4028 SN16913 MIX
Q3045 S35298 HPF
Q3048 uPC79L05J REG
-5
-12
Q2016 FA1A4P FM SQ CNTL
Q4027 2SC535B AMP
Q3040 TBP18S030N DATA CONV
Q3033 uPC78L08J REG
+8
+12
S7202 AGC SW
Q7202 BA1A4P SW
SCAN STOP
Q4025-2 HD74HC74P 1/2
Q4017 uPC1037H MIX
HPF DATA
Q2028 FA1A4P SW
Q7201 BA1A4P SW
Q4024 2SC458C AMP
Q4022 2SK241GR BUFF
S7201 METER SW
VCC IC
SWR
1
2
3
4
5
6
7
11
12
13
14
15
LPF DATA
BPF DATA
PLL DATA
VCO DATA
CAR DDS DATA
PLL DDS DATA
R12
M SCAN
TU DATA
TONE
MUTE
CNTL
MODE
T12
UL
CNTL-UNIT
KEY MATRIX
Q7001 MD40472BA22FS DISPLAY CPU
DS7001 FIP14DM9
DC-DC
MAIN DIAL
MEM
CLAR
TRANSMIT
RECEIVE
CONTROL
TUNER SECTION(MAIN)
RF IN
Q6411-3 MC14071BCP GATE
Q6404-1 uPC393C
Q6405 2SK104J BUFF
Q6406 2SK104J BUFF

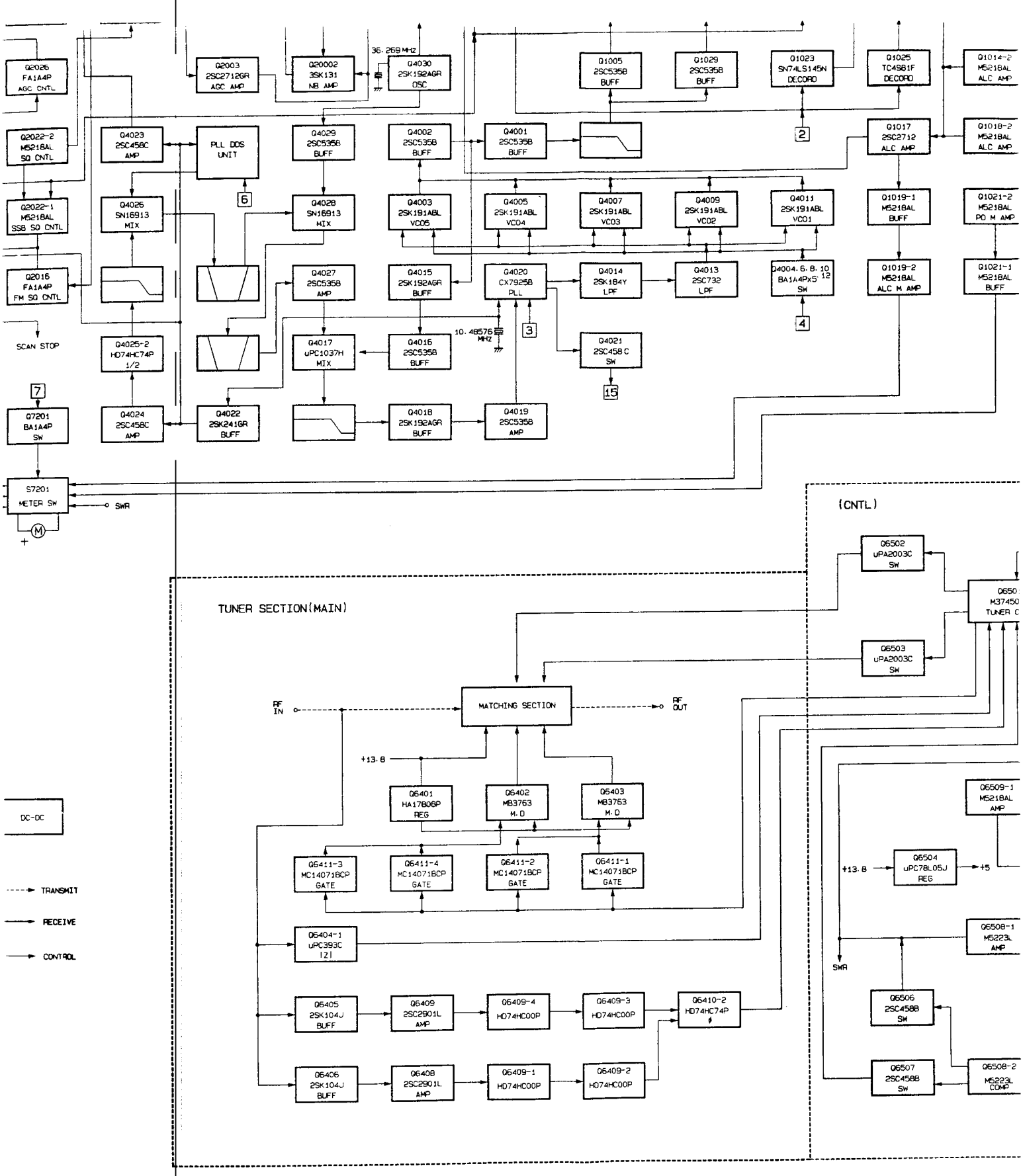
Q2026 FA1A4P AGC CNTL
Q2022-2 M5218AL SQ CNTL
Q2022-1 M5218AL SSB SQ CNTL
Q2016 FA1A4P FM SQ CNTL
SCAN STOP
Q7201 BA1A4P SW
S7201 METER SW
SWR
Q2003 2SC2712GR AGC AMP
Q20002 3SK131 NB AMP
36.269 MHz
Q4030 2SK192AGR OSC
Q4023 2SC458C AMP
PLL DDS UNIT
Q4029 2SC5358 BUFF
Q4002 2SC5358 BUFF
Q4001 2SC5358 BUFF
Q1005 2SC5358 BUFF
Q1029 2SC5358 BUFF
Q1023 SN74LS145N DECORD
Q1025 TC4S81F DECORD
Q1014-2 M5218AL ALC AMP
Q1017 2SC2712 ALC AMP
Q1018-2 M5218AL ALC AMP
Q4026 SN16913 MIX
Q4028 SN16913 MIX
Q4003 2SK191ABL VCO5
Q4005 2SK191ABL VCO4
Q4007 2SK191ABL VCO3
Q4009 2SK191ABL VCO2
Q4011 2SK191ABL VCO1
Q1019-1 M5218AL BUFF
Q1021-2 M5218AL PD M AMP
Q4004.6.8.10 BA1A4Px5 SW
Q1019-2 M5218AL ALC M AMP
Q1021-1 M5218AL BUFF
Q4027 2SC5358 AMP
Q4015 2SK192AGR BUFF
Q4020 CX79258 PLL
Q4014 2SK184Y LPF
Q4013 2SC732 LPF
10.48576 MHz
Q4025-2 HD74HC74P 1/2
Q4017 uPC1037H MIX
Q4016 2SC5358 BUFF
Q4021 2SC458C SW
Q4024 2SC458C AMP
Q4022 2SK241GR BUFF
Q4018 2SK192AGR BUFF
Q4019 2SC5358 AMP
DC-DC
TRANSMIT
RECEIVE
CONTROL
TUNER SECTION(MAIN)
RF IN
MATCHING SECTION
RF OUT
+13.8
Q6401 HA17808P REG
Q6402 MB3763 M.D
Q6403 MB3763 M.D
Q6411-3 MC14071BCP GATE
Q6411-4 MC14071BCP GATE
Q6411-2 MC14071BCP GATE
Q6411-1 MC14071BCP GATE
Q6404-1 uPC393C
Q6405 2SK104J BUFF
Q6409 2SC2901L AMP
Q6409-4 HD74HC00P
Q6409-3 HD74HC00P
Q6410-2 HD74HC74P
Q6406 2SK104J BUFF
Q6408 2SC2901L AMP
Q6409-1 HD74HC00P
Q6409-2 HD74HC00P
(CNTL)
Q6502 uPA2003C SW
Q650 M37450 TUNER C
Q6503 uPA2003C SW
Q6509-1 M5218AL AMP
Q6504 uPC78L05J REG
+5
Q6508-1 M5223L AMP
Q6506 2SC4588 SW
Q6507 2SC4588 SW
Q6508-2 M5223L COMP

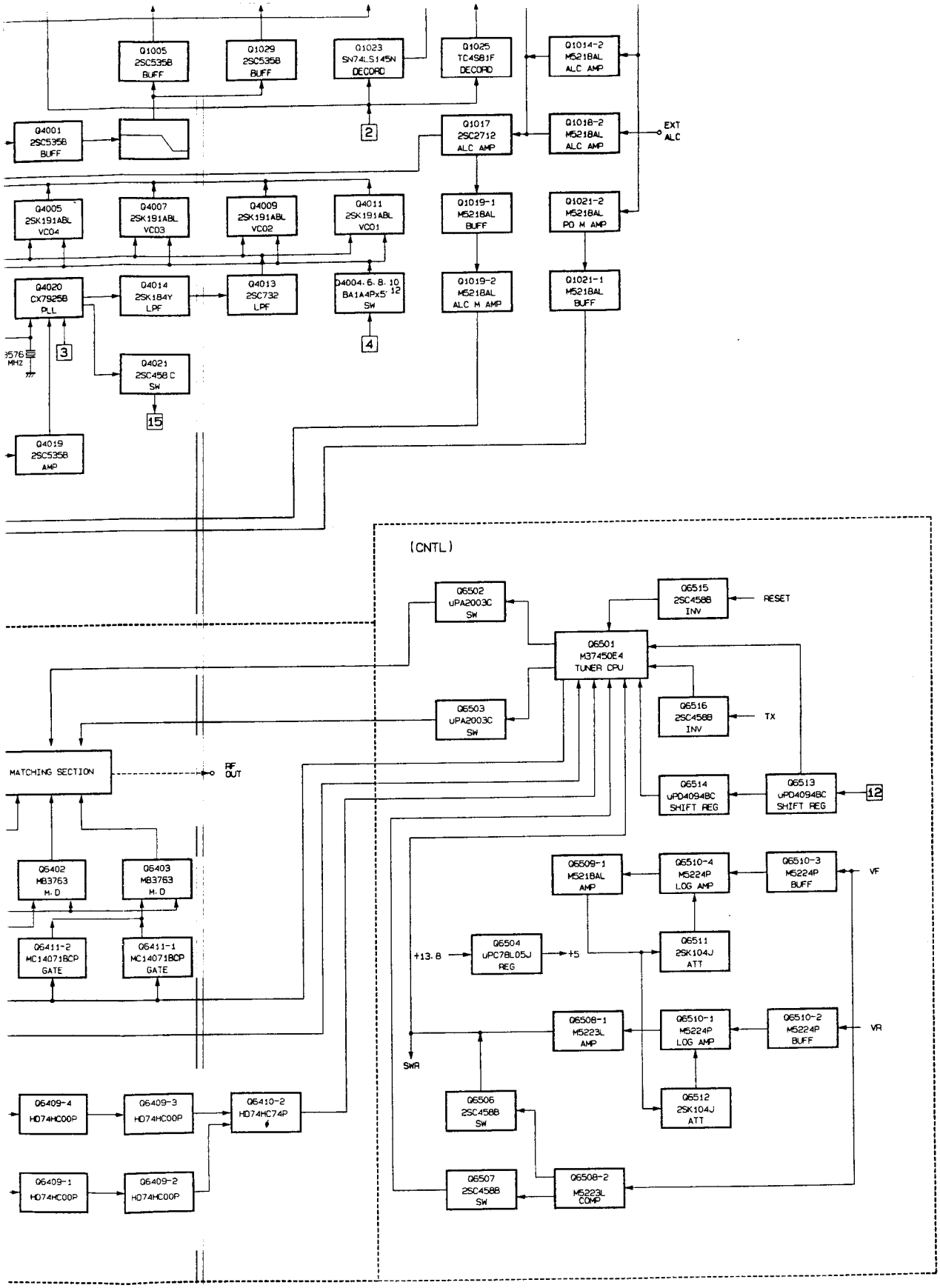

BLOCK DIAGRAM

Interconnection Diagram

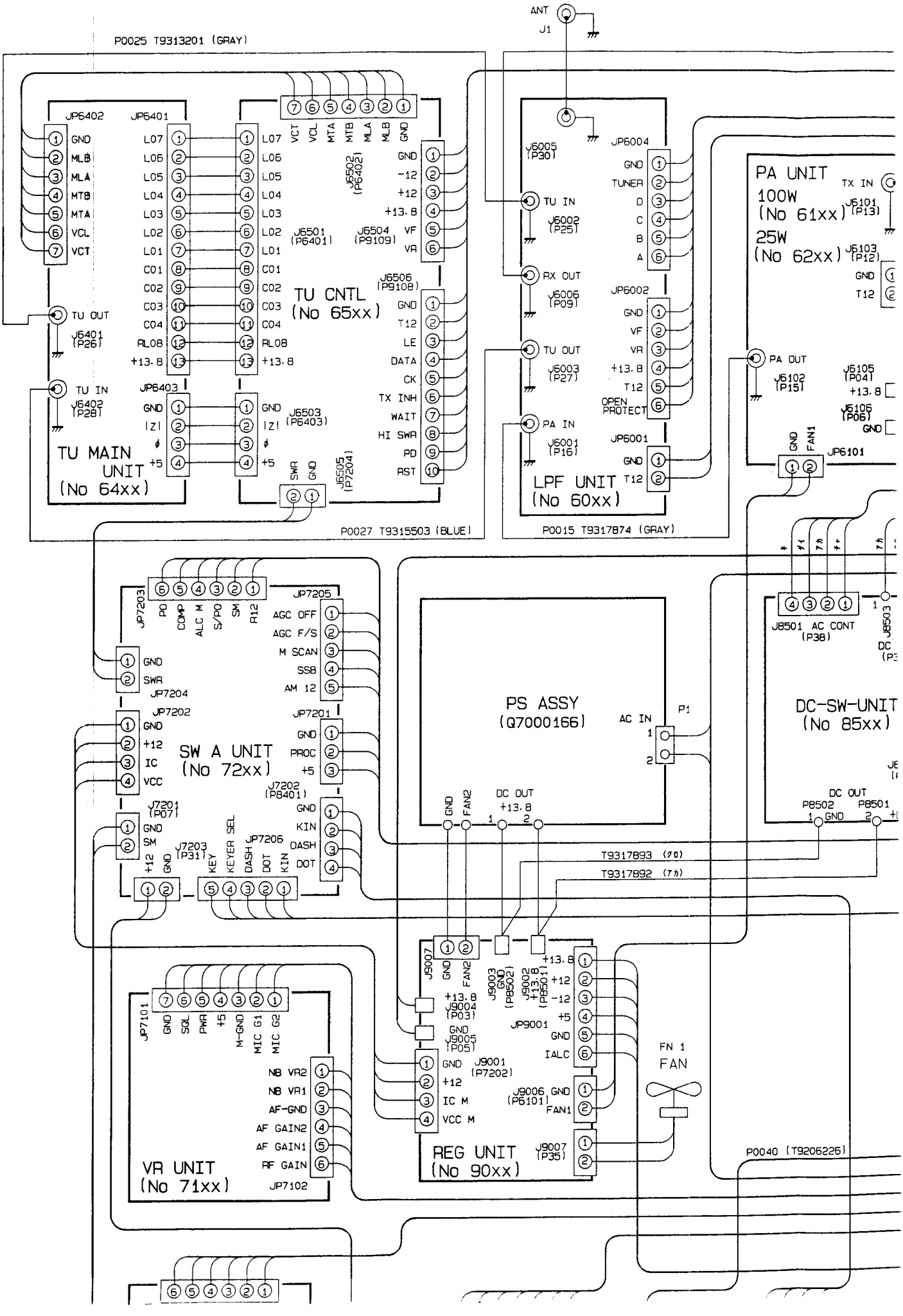

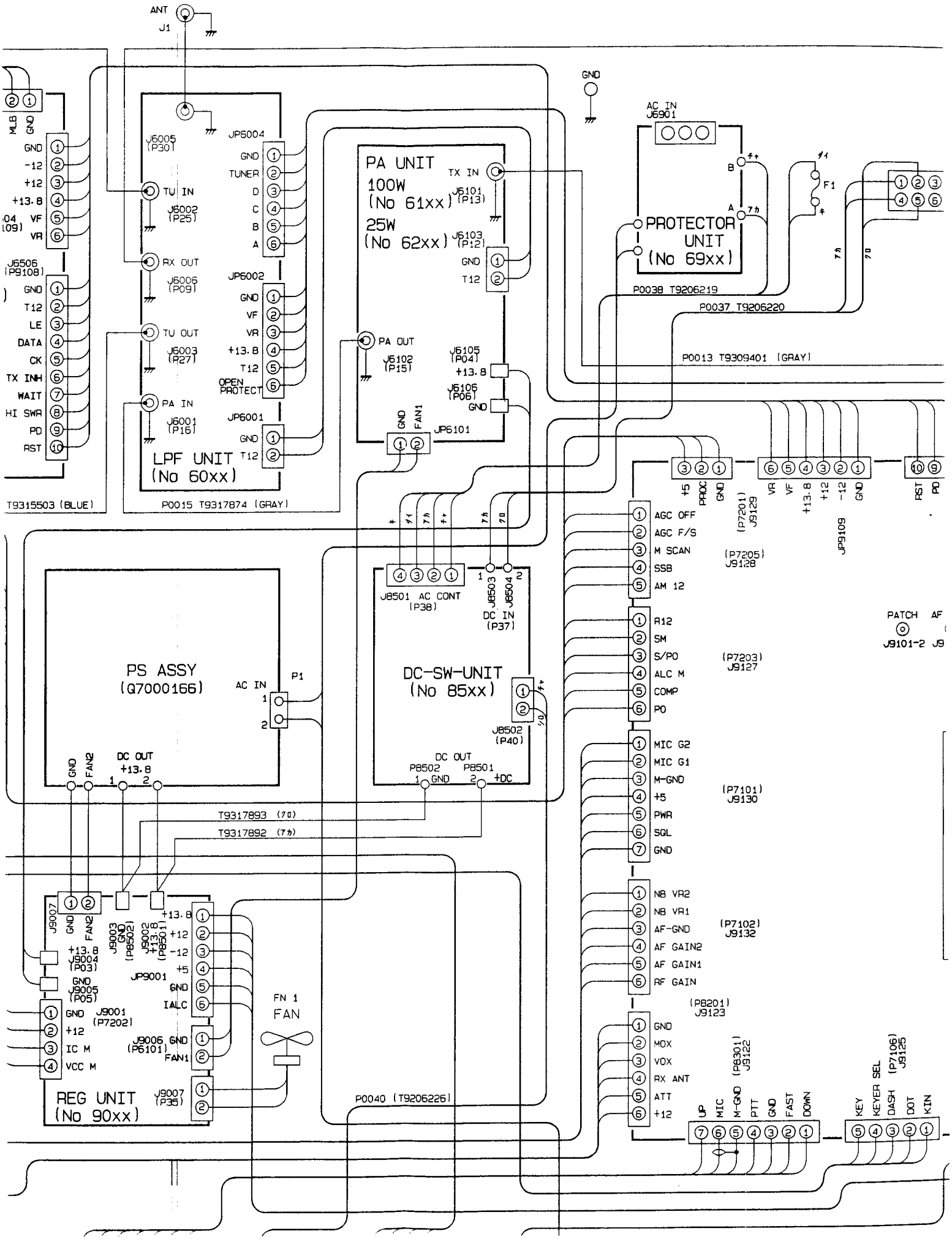
ANT
J1
GND
AC IN
J6901
PROTECTOR
UNIT
(No 69xx)
F1
PA UNIT
100W
(No 61xx)
25W
(No 62xx)
TX IN
J6101
(P13)
J6103
(P12)
GND
T12
PA OUT
J6102
(P15)
J6105
(P04)
+13.8
J6106
(P06)
GND
GND
FAN1
JP6101
P0038 T9206219
P0037 T9206220
P0013 T9309401 (GRAY)
MLB
GND
-12
+12
+13.8
VF
VR
J6506
(P9108)
GND
T12
LE
DATA
CK
TX INH
WAIT
HI SWR
PD
RST
T9315503 (BLUE)
J6005
(P30)
TU IN
J6002
(P25)
RX OUT
J6006
(P09)
TU OUT
J6003
(P27)
PA IN
J6001
(P16)
LPF UNIT
(No 60xx)
JP6004
GND
TUNER
D
C
B
A
JP6002
GND
VF
VR
+13.8
T12
OPEN
PROTECT
JP6001
GND
T12
P0015 T9317874 (GRAY)
+5
PROC
GND
(P7201)
J9129
VR
VF
+13.8
+12
-12
GND
JP9109
RST
PD
AGC OFF
AGC F/S
M SCAN
SSB
AM 12
(P7205)
J9128
R12
SM
S/PO
ALC M
COMP
PO
(P7203)
J9127
MIC G2
MIC G1
M-GND
+5
PWR
SGL
GND
(P7101)
J9130
NB VR2
NB VR1
AF-GND
AF GAIN2
AF GAIN1
RF GAIN
(P7102)
J9132
(P8201)
J9123
GND
MOX
VOX
RX ANT
ATT
+12
(P8301)
J9122
UP
MIC
M-GND
PTT
GND
FAST
DOWN
KEY
KEYER SEL
DASH
DOT
KIN
(P7106)
J9125
J8501 AC CONT
(P38)
J8503
J8504
DC IN
(P37)
PATCH AF
J9101-2 J9
PS ASSY
(Q7000166)
AC IN
P1
DC OUT
+13.8
GND
FAN2
DC-SW-UNIT
(No 85xx)
J8502
(P40)
DC OUT
P8502
P8501
GND
+DC
T9317893 (ブロ)
T9317892 (ブカ)
J9007
GND
FAN2
+13.8
J9004
(P03)
GND
J9005
(P05)
J9001
(P7202)
GND
+12
IC M
VCC M
J9003
GND
(P8502)
J9002
+13.8
(P8501)
JP9001
+13.8
+12
-12
+5
GND
IALC
J9006
(P6101)
GND
FAN1
J9007
(P35)
REG UNIT
(No 90xx)
FN 1
FAN
P0040 (T9206226)

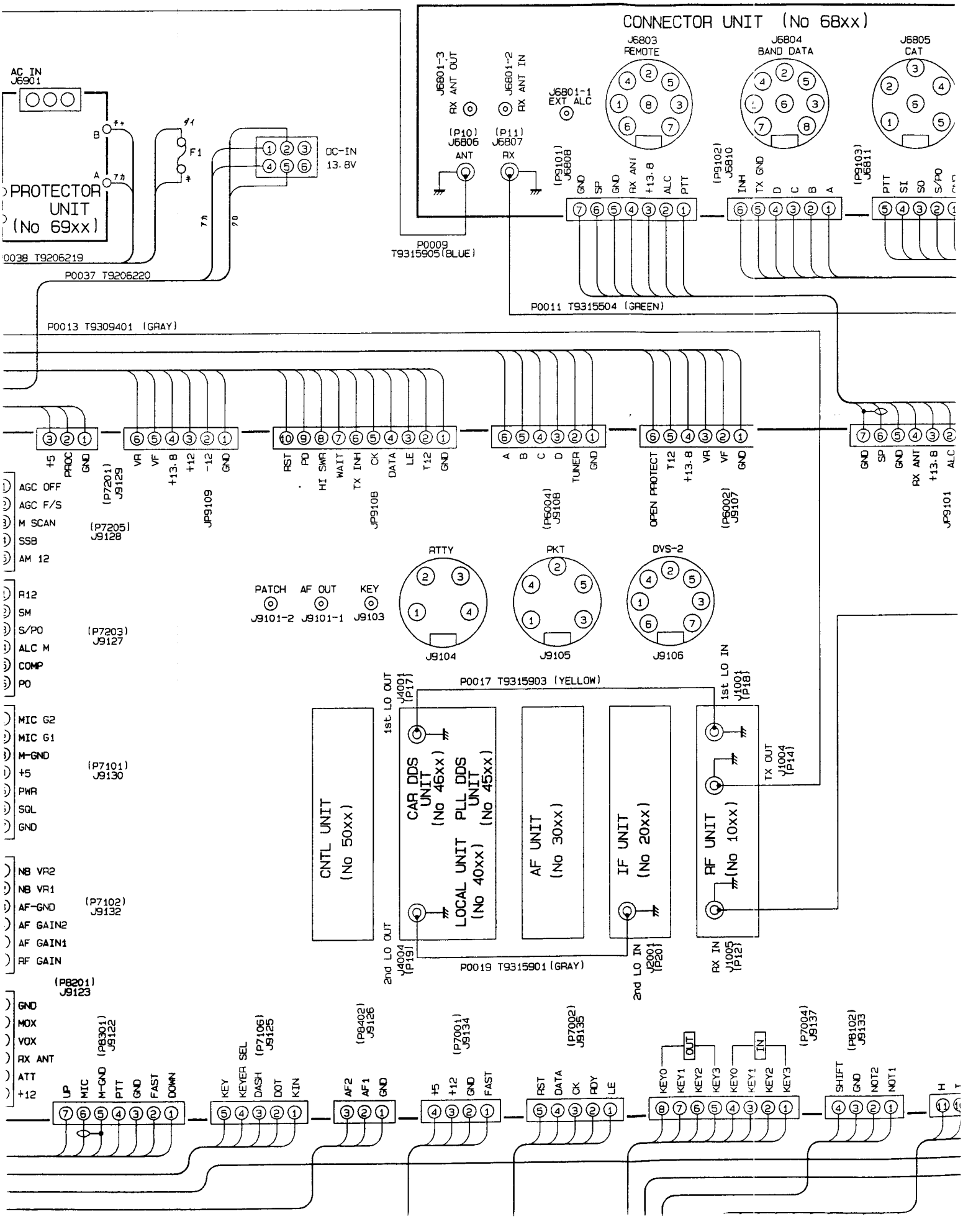
CONNECTOR UNIT (No 68xx)
J6803 REMOTE
J6804 BAND DATA
J6805 CAT
J6801-3 RX ANT OUT
J6801-2 RX ANT IN
J6801-1 EXT ALC
(P10) J6806 ANT
(P11) J6807 RX
(P9101) J6808
(P9102) J6810
(P9103) J6811
AC IN J6901
PROTECTOR UNIT (No 69xx)
F1
DC-IN 13.8V
P0038 T9206219
P0037 T9206220
P0009 T9315905 (BLUE)
P0011 T9315504 (GREEN)
P0013 T9309401 (GRAY)
AGC OFF
AGC F/S
M SCAN
SSB
AM 12
R12
SM
S/PO
ALC M
COMP
PO
MIC G2
MIC G1
M-GND
+5
PWR
SQL
GND
NB VR2
NB VR1
AF-GND
AF GAIN2
AF GAIN1
RF GAIN
(P7201) J9129
(P7205) J9128
(P7203) J9127
(P7101) J9130
(P7102) J9132
(P8201) J9123
JP9109
JP9108
(P6004) J9108
(P6002) J9107
JP9101
PATCH J9101-2
AF OUT J9101-1
KEY J9103
RTTY J9104
PKT J9105
DVS-2 J9106
CNTL UNIT (No 50xx)
CAR DDS UNIT (No 46xx)
LOCAL UNIT (No 40xx)
PLL DDS UNIT (No 45xx)
AF UNIT (No 30xx)
IF UNIT (No 20xx)
RF UNIT (No 10xx)
1st LO OUT J4001 (P17)
2nd LO OUT J4004 (P19)
1st LO IN J1001 (P18)
TX OUT J1004 (P14)
RX IN J1005 (P12)
2nd LO IN J2001 (P20)
P0017 T9315903 (YELLOW)
P0019 T9315901 (GRAY)
(P8301) J9122
(P7106) J9125
(P8402) J9126
(P7001) J9134
(P7002) J9135
(P7004) J9137
(P8102) J9133

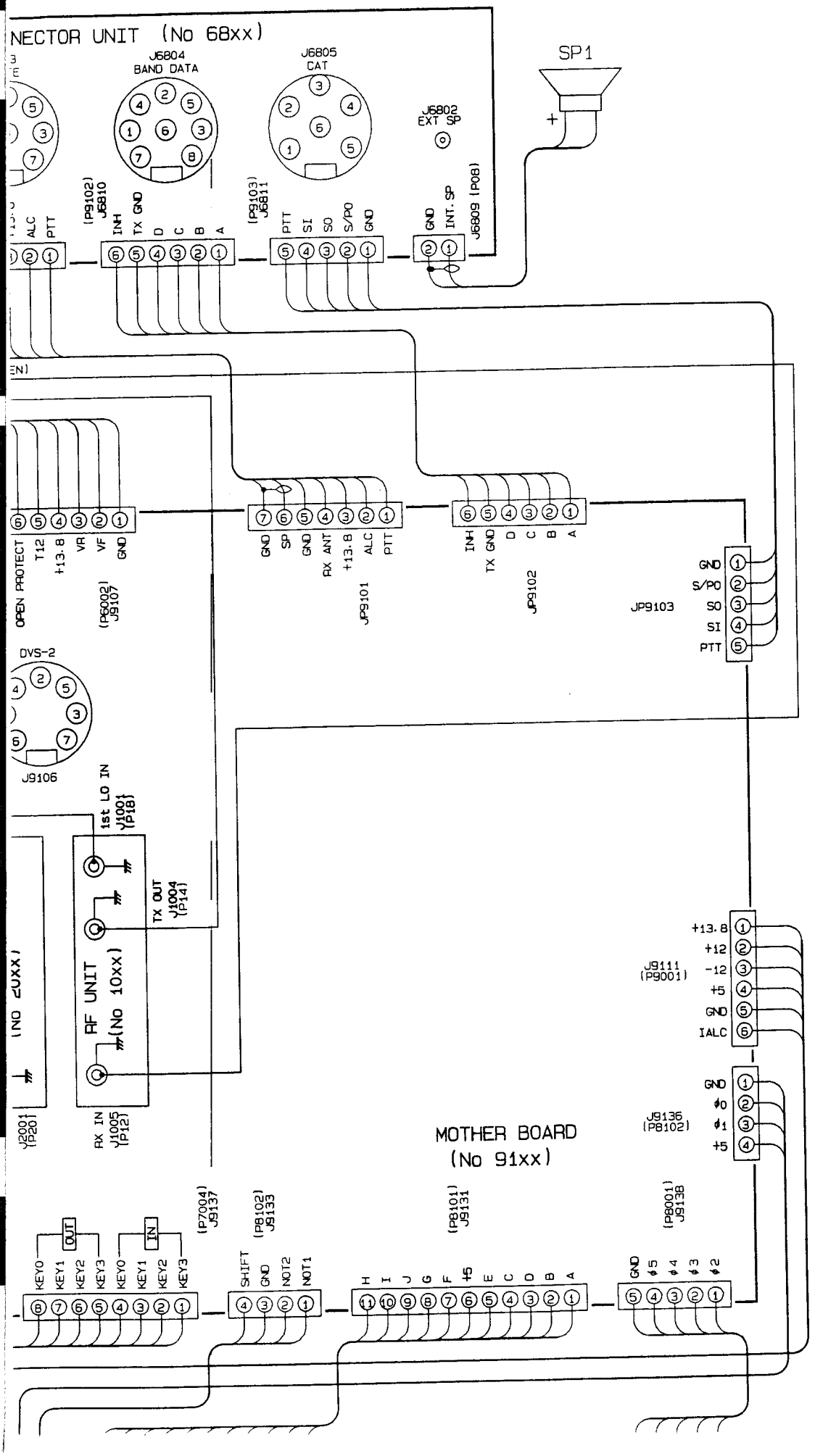
NECTOR UNIT (No 68xx)
J6804
BAND DATA
J6805
CAT
J6802
EXT SP
SP1
(P9102)
J6810
(P9103)
J6811
J6809 (P08)
ALC
PTT
INH
TX GND
D
C
B
A
SI
SO
S/PO
GND
INT. SP
OPEN PROTECT
T12
+13.8
VR
VF
(P6002)
J9107
SP
RX ANT
ALC
JP9101
JP9102
JP9103
S/PO
SO
SI
PTT
DVS-2
J9106
1st LO IN
J1001
(P18)
TX OUT
J1004
(P14)
RF UNIT
(No 10xx)
RX IN
J1005
(P12)
J200
(P20)
+13.8
+12
-12
+5
IALC
J9111
(P9001)
J9136
(P8102)
MOTHER BOARD
(No 91xx)
(P7004)
J9137
(P8102)
J9133
(P8101)
J9131
(P8001)
J9138
OUT
IN
KEY0
KEY1
KEY2
KEY3
SHIFT
NOT2
NOT1
H
I
J
G
F
E
C
D
B
A
ϕ5
ϕ4
ϕ3
ϕ2
ϕ0
ϕ1

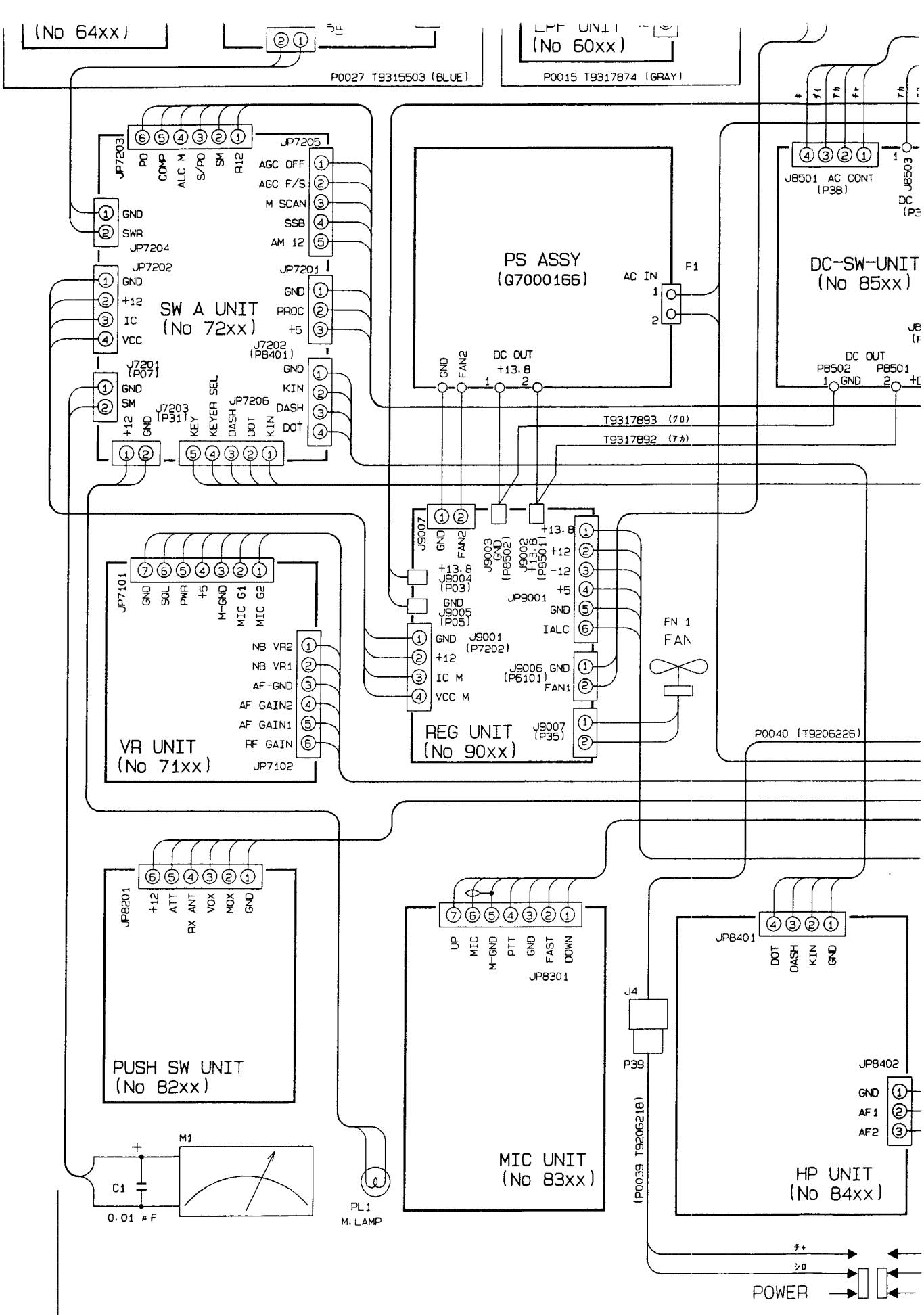
(No 64xx)
P0027 T9315503 (BLUE)
(No 60xx)
P0015 T9317874 (GRAY)
JP7203
PO
COMP
ALC M
S/PO
SM
R12
JP7205
AGC OFF
AGC F/S
M SCAN
SSB
AM 12
JP7204
GND
SWR
JP7202
GND
+12
IC
VCC
SW A UNIT
(No 72xx)
JP7201
GND
PROC
+5
J7202
(P8401)
J7201
(P07)
GND
SM
J7203
(P31)
+12
GND
KEY
KEYER SEL
DASH
DOT
KIN
JP7206
DASH
DOT
PS ASSY
(Q7000166)
AC IN
P1
GND
FAN2
DC OUT
+13.8
JB501 AC CONT
(P38)
JB503
DC-SW-UNIT
(No 85xx)
DC OUT
PB502
PB501
GND
T9317893 (ブ)
T9317892 (ア)
J9007
GND
FAN2
+13.8
J9004
(P03)
GND
J9005
(P05)
J9003
GND
(PB502)
J9002
+13.8
(PB501)
JP9001
+13.8
+12
-12
+5
GND
IALC
FN 1
FAN
JP7101
GND
SQL
PWR
+5
M-GND
MIC G1
MIC G2
NB VR2
NB VR1
AF-GND
AF GAIN2
AF GAIN1
RF GAIN
JP7102
VR UNIT
(No 71xx)
J9001
(P7202)
GND
+12
IC M
VCC M
J9006
(P6101)
GND
FAN1
REG UNIT
(No 90xx)
J9007
(P35)
P0040 (T9206226)
JP8201
+12
ATT
ANT
RX
VOX
MOX
GND
PUSH SW UNIT
(No 82xx)
UP
MIC
M-GND
PTT
GND
FAST
DOWN
JP8301
MIC UNIT
(No 83xx)
JP8401
DOT
DASH
KIN
GND
J4
P39
JP8402
GND
AF1
AF2
HP UNIT
(No 84xx)
(P0039 T9206218)
M1
C1
0.01 μF
PL1
M. LAMP
POWER

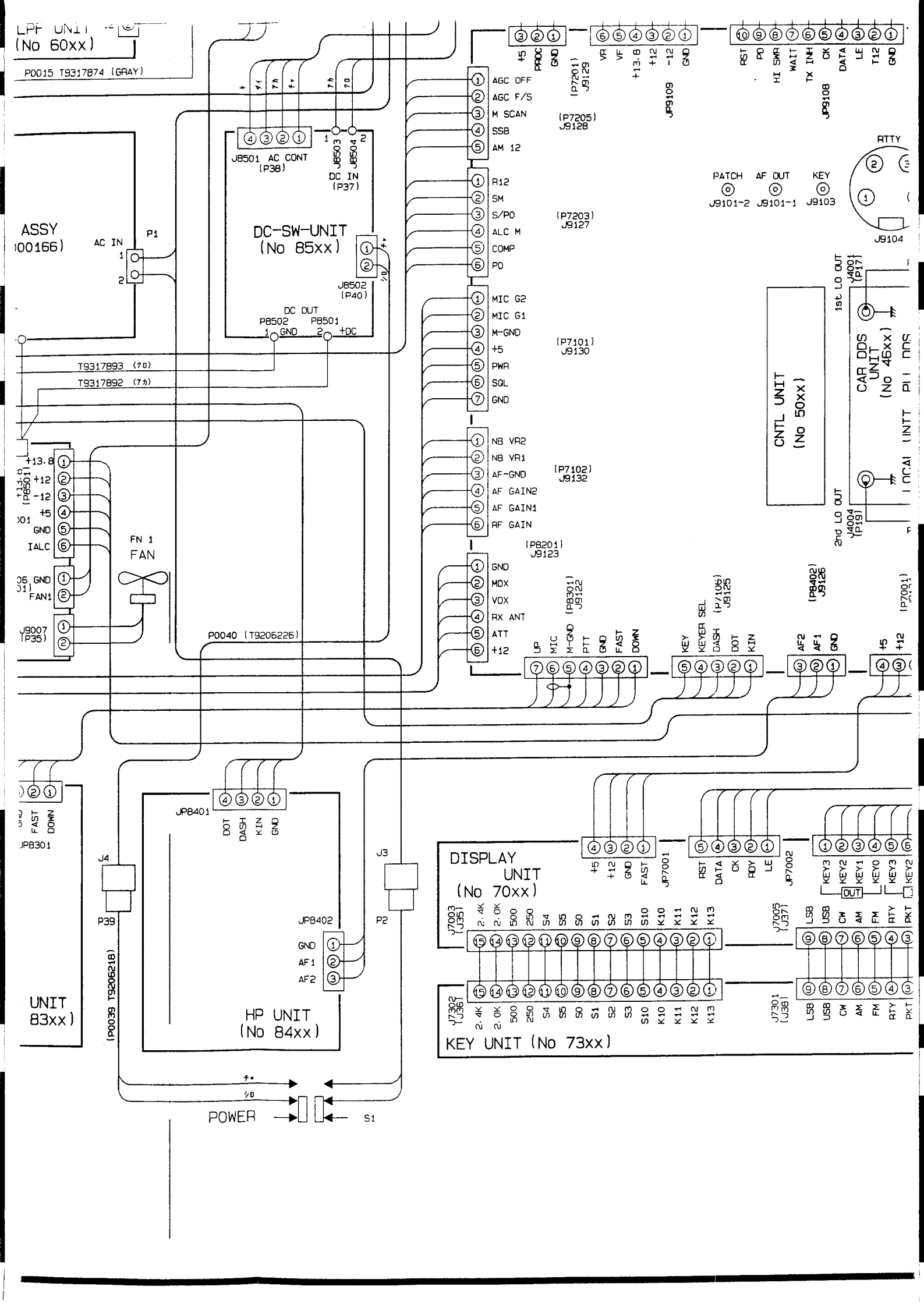
LPF UNIT
(No 60xx)
P0015 T9317874 (GRAY)
J8501 AC CONT
(P38)
J8503
J8504
DC IN
(P37)
DC-SW-UNIT
(No 85xx)
J8502
(P40)
DC OUT
P8502
P8501
GND
+DC
ASSY
AC IN
P1
T9317893 (7Ω)
T9317892 (7A)
FN 1
FAN
P0040 (T9206226)
(P7201)
J9129
(P7205)
J9128
(P7203)
J9127
(P7101)
J9130
(P7102)
J9132
(P8201)
J9123
AGC OFF
AGC F/S
M SCAN
SSB
AM 12
R12
SM
S/PO
ALC M
COMP
PO
MIC G2
MIC G1
M-GND
+5
PWR
SQL
GND
NB VR2
NB VR1
AF-GND
AF GAIN2
AF GAIN1
RF GAIN
GND
MOX
VOX
RX ANT
ATT
+12
JP9109
JP9108
PATCH
AF OUT
KEY
J9101-2
J9101-1
J9103
RTTY
J9104
CNTL UNIT
(No 50xx)
CAR DDS
UNIT
(No 46xx)
1st LO OUT
J4001
(P17)
2nd LO OUT
J4004
(P19)
(P8301)
J9122
(P/106)
J9125
(P8402)
J9126
(P7001)
UP
MIC
M-GND
PTT
GND
FAST
DOWN
KEY
KEYER SEL
DASH
DOT
KIN
AF2
AF1
GND
+5
+12
JP8401
DOT
DASH
KIN
GND
JP8301
J4
P39
J3
P2
JP8402
GND
AF1
AF2
(P0039 T9206218)
UNIT
83xx)
HP UNIT
(No 84xx)
DISPLAY
UNIT
(No 70xx)
JP7001
+5
+12
GND
FAST
JP7002
RST
DATA
CK
RDY
LE
KEY3
KEY2
KEY1
KEY0
KEY3
KEY2
OUT
J7003
(J35)
J7302
(J36)
J7005
(J37)
J7301
(J38)
2.4K
2.0K
500
250
S4
S5
S0
S1
S2
S3
S10
K10
K11
K12
K13
LSB
USB
CW
AM
FM
RTY
PKT
KEY UNIT (No 73xx)
POWER
S1

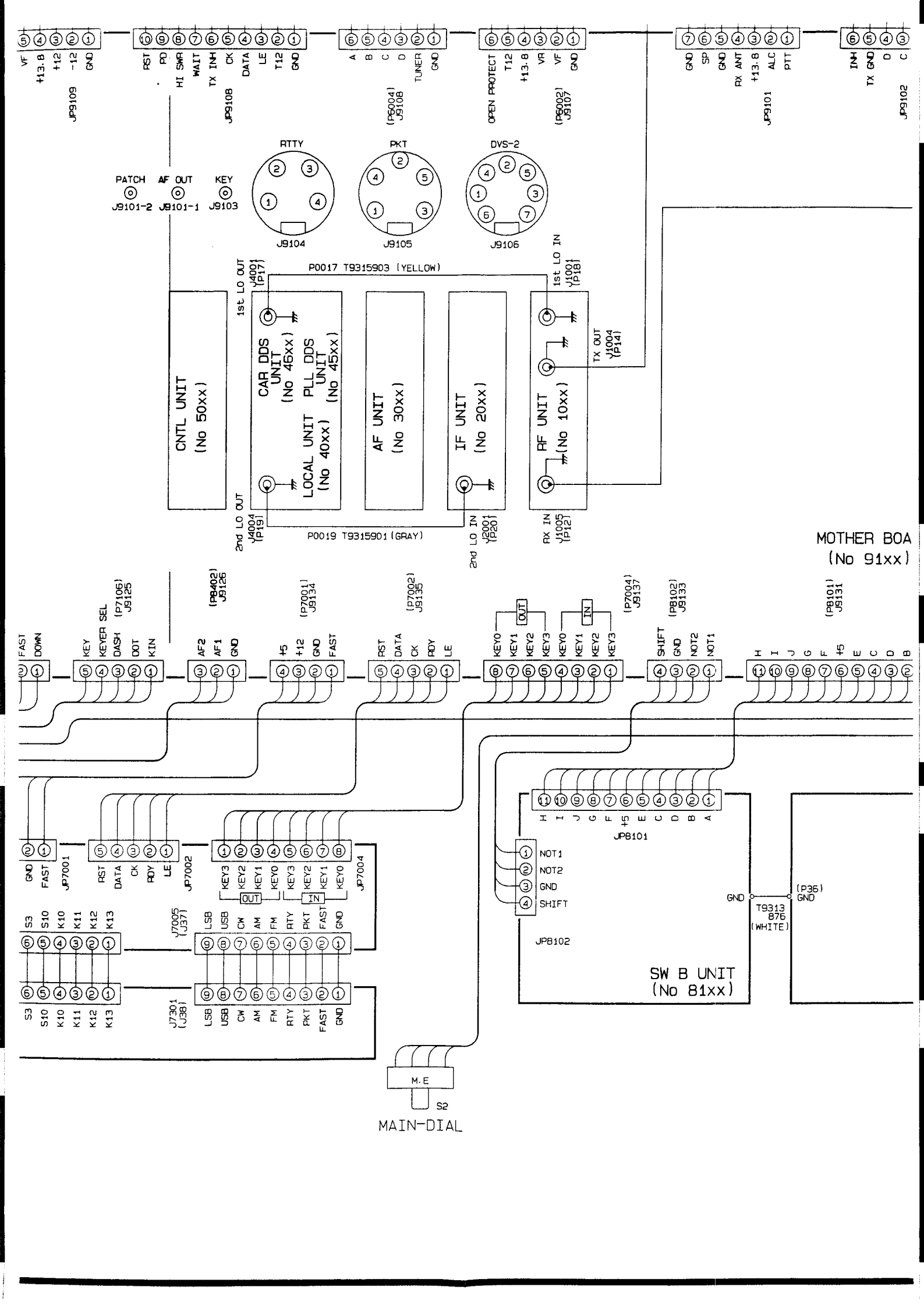
JP9109
VF
+13.8
+12
-12
GND
JP9108
RST
PD
HI SWR
WAIT
TX INH
CK
DATA
LE
T12
GND
(P6004) J9108
A
B
C
D
TUNER
GND
(P6002) J9107
OPEN PROTECT
T12
+13.8
VR
VF
GND
JP9101
GND
SP
GND
RX ANT
+13.8
ALC
PTT
JP9102
INH
TX GND
D
C
PATCH
AF OUT
KEY
J9101-2
J9101-1
J9103
RTTY
PKT
DVS-2
J9104
J9105
J9106
1st LO OUT
J4001 (P17)
P0017 T9315903 (YELLOW)
1st LO IN
J1001 (P18)
CNTL UNIT (No 50xx)
CAR DDS UNIT (No 46xx)
LOCAL UNIT PLL DDS UNIT (No 40xx) (No 45xx)
AF UNIT (No 30xx)
IF UNIT (No 20xx)
RF UNIT (No 10xx)
TX OUT
J1004 (P14)
2nd LO OUT
J4004 (P19)
P0019 T9315901 (GRAY)
2nd LO IN
J2001 (P20)
RX IN
J1005 (P12)
MOTHER BOA (No 91xx)
(P7106) J9125
KEY
KEYER SEL
DASH
DOT
KIN
(P8402) J9126
AF2
AF1
GND
(P7001) J9134
+5
+12
GND
FAST
(P7002) J9135
RST
DATA
CK
RDY
LE
KEY0
KEY1
KEY2
KEY3
OUT
IN
(P7004) J9137
SHIFT
GND
NOT2
NOT1
(P8102) J9133
(P8101) J9131
H
I
J
G
F
+5
E
C
D
B
A
JP7001
JP7002
JP7004
JP8101
JP8102
NOT1
NOT2
GND
SHIFT
GND
(P36) GND
T9313 876 (WHITE)
SW B UNIT (No 81xx)
J7005 (J37)
J7301 (J38)
S3
S10
K10
K11
K12
K13
LSB
USB
CW
AM
FM
RTY
PKT
FAST
GND
M.E
S2
MAIN-DIAL

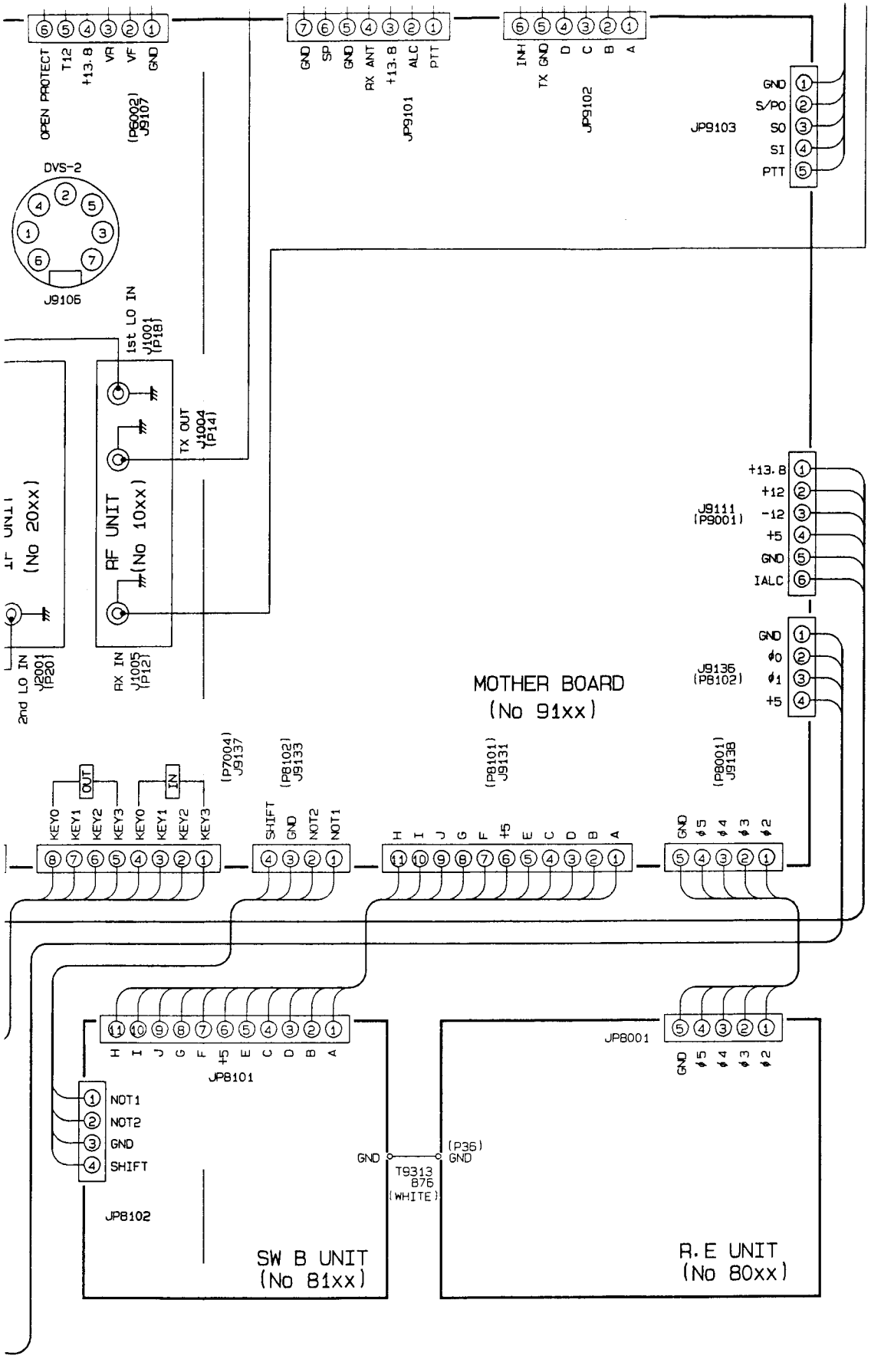
OPEN PROTECT
T12
+13.8
VR
VF
GND
(P6002)
J9107
GND
SP
GND
RX ANT
+13.8
ALC
PTT
JP9101
INH
TX GND
D
C
B
A
JP9102
JP9103
GND
S/PO
SO
SI
PTT
DVS-2
J9106
1st LO IN
J1001
(P18)
TX OUT
J1004
(P14)
RF UNIT
(No 10xx)
(No 20xx)
2nd LO IN
J2001
(P20)
RX IN
J1005
(P12)
+13.8
+12
-12
+5
GND
IALC
J9111
(P9001)
GND
ϕ0
ϕ1
+5
J9136
(PB102)
MOTHER BOARD
(No 91xx)
(P7004)
J9137
(PB102)
J9133
(PB101)
J9131
(PB001)
J9138
OUT
IN
KEY0
KEY1
KEY2
KEY3
SHIFT
GND
NOT2
NOT1
H
I
J
G
F
+5
E
C
D
B
A
ϕ5
ϕ4
ϕ3
ϕ2
JP8101
JP8001
NOT1
NOT2
GND
SHIFT
JP8102
GND
(P36)
GND
T9313
876
(WHITE)
SW B UNIT
(No 81xx)
R.E UNIT
(No 80xx)

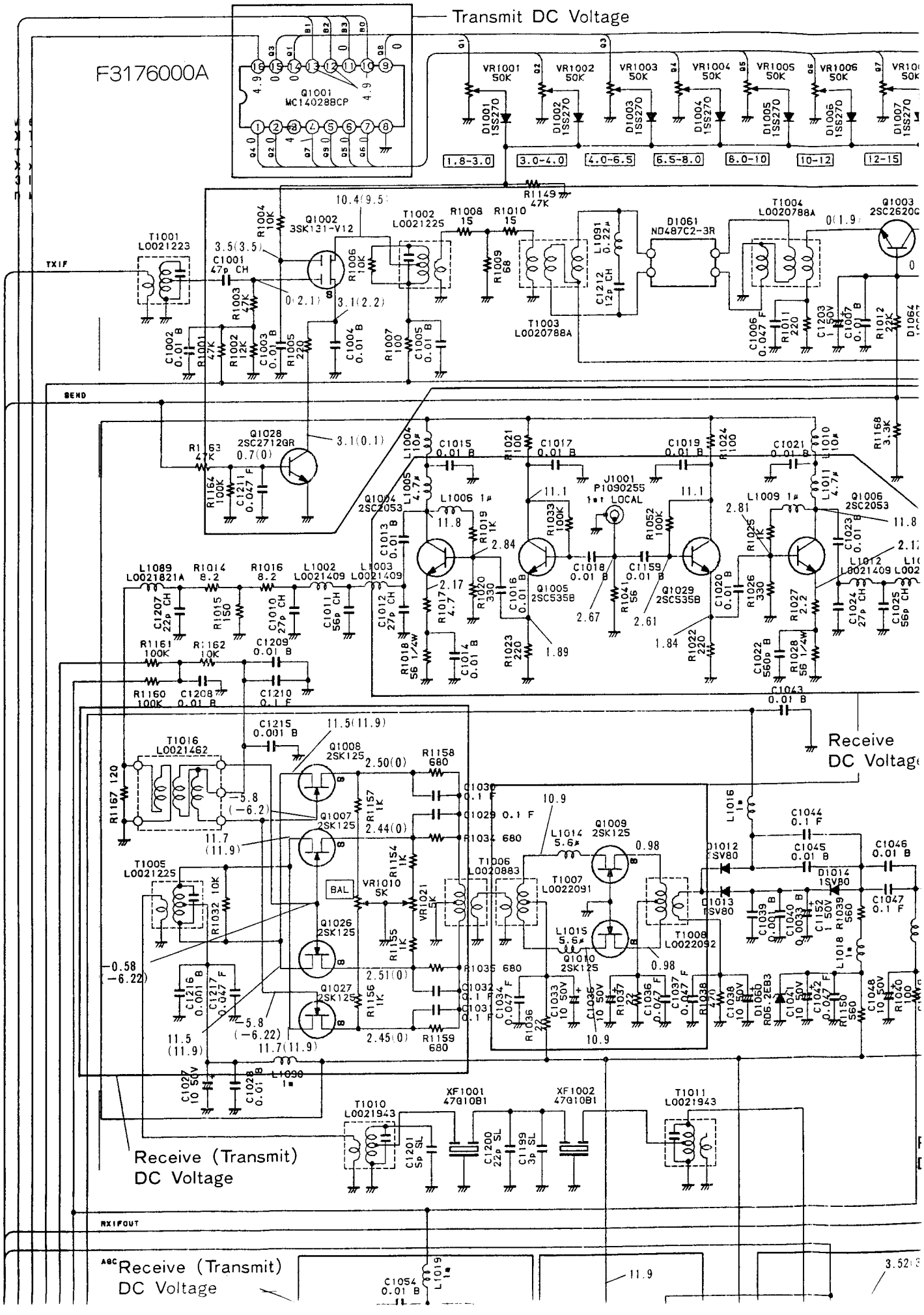
F3176000A
Transmit DC Voltage
Receive
DC Voltage
Receive (Transmit)
DC Voltage
Receive (Transmit)
DC Voltage
TXIF
SEND
RXIFOUT
AGC
BAL
1.8-3.0
3.0-4.0
4.0-6.5
6.5-8.0
8.0-10
10-12
12-15

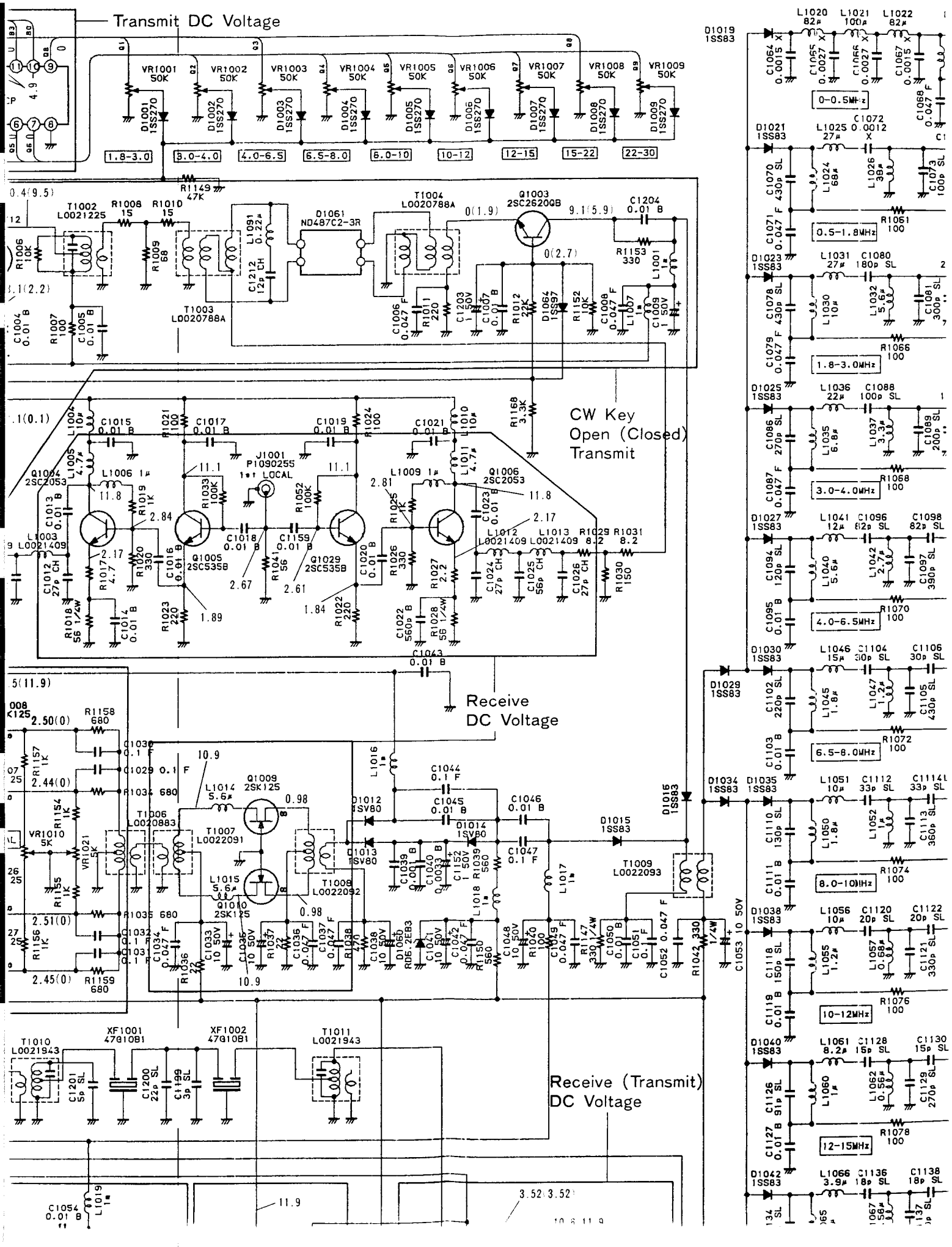

Transmit DC Voltage
CW Key
Open (Closed)
Transmit
Receive
DC Voltage
Receive (Transmit)
DC Voltage
1.8-3.0
3.0-4.0
4.0-6.5
6.5-8.0
8.0-10
10-12
12-15
15-22
22-30
0-0.5MHz
0.5-1.8MHz
1.8-3.0MHz
3.0-4.0MHz
4.0-6.5MHz
6.5-8.0MHz
8.0-10MHz
10-12MHz
12-15MHz

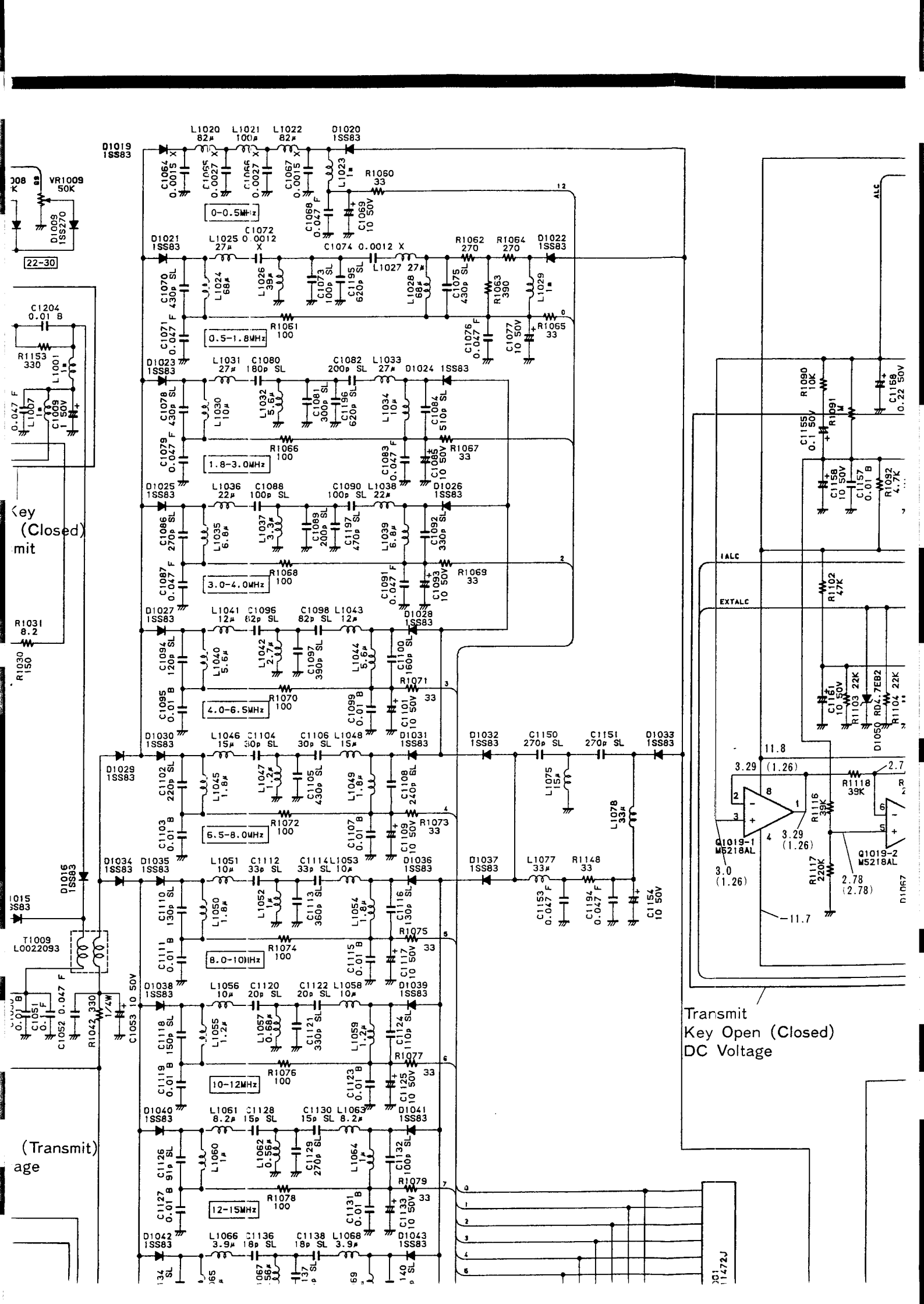
D1019 1SS83
L1020 82µ
L1021 100µ
L1022 82µ
D1020 1SS83
C1064 0.0015 X
C1065 0.0027 X
C1066 0.0027 X
C1067 0.0015 X
L1023 1µ
R1050 33
C1069 0.047 F
C1069 10 50V
0-0.5MHz
D1021 1SS83
L1025 27µ
C1072 0.0012 X
C1074 0.0012 X
L1027 27µ
R1062 270
R1064 270
D1022 1SS83
C1070 430p SL
L1024 68µ
L1026 39µ
C1073 100p SL
C1195 620p SL
L1028 68µ
C1075 430p SL
R1063 390
L1029 1µ
C1071 0.047 F
R1051 100
0.5-1.8MHz
C1076 0.047 F
C1077 10 50V
R1065 33
D1023 1SS83
L1031 27µ
C1080 180p SL
C1082 200p SL
L1033 27µ
D1024 1SS83
C1078 430p SL
L1030 10µ
L1032 5.6µ
C1081 300p SL
C1196 620p SL
L1034 10µ
C1084 510p SL
C1079 0.047 F
R1066 100
1.8-3.0MHz
C1083 0.047 F
C1085 10 50V
R1067 33
D1025 1SS83
L1036 22µ
C1088 100p SL
C1090 100p SL
L1038 22µ
D1026 1SS83
C1086 270p SL
L1035 6.8µ
L1037 3.3µ
C1089 200p SL
C1197 470p SL
L1039 6.8µ
C1092 330p SL
C1087 0.047 F
R1068 100
3.0-4.0MHz
C1091 0.047 F
C1093 10 50V
R1069 33
D1027 1SS83
L1041 12µ
C1096 82p SL
C1098 82p SL
L1043 12µ
D1028 1SS83
C1094 120p SL
L1040 5.6µ
L1042 2.7µ
C1097 390p SL
L1044 5.6µ
C1100 160p SL
C1095 0.01 B
R1070 100
4.0-6.5MHz
C1099 0.01 B
C1101 10 50V
R1071 33
D1030 1SS83
L1046 15µ
C1104 30p SL
C1106 30p SL
L1048 15µ
D1031 1SS83
D1032 1SS83
C1150 270p SL
C1151 270p SL
D1033 1SS83
D1029 1SS83
C1102 220p SL
L1045 1.8µ
L1047 1.2µ
C1105 430p SL
L1049 1.8µ
C1108 240p SL
L1075 15µ
L1078 33µ
C1103 0.01 B
R1072 100
6.5-8.0MHz
C1107 0.01 B
C1109 10 50V
R1073 33
D1034 1SS83
D1035 1SS83
L1051 10µ
C1112 33p SL
C1114 33p SL
L1053 10µ
D1036 1SS83
D1037 1SS83
L1077 33µ
R1148 33
D1016 1SS83
C1110 130p SL
L1050 1.8µ
L1052 1µ
C1113 360p SL
L1054 1.8µ
C1116 130p SL
C1153 0.047 F
C1194 0.047 F
C1154 10 50V
T1009 L0022093
C1111 0.01 B
R1074 100
8.0-10MHz
C1115 0.01 B
C1117 10 50V
R1075 33
D1038 1SS83
L1056 10µ
C1120 20p SL
C1122 20p SL
L1058 10µ
D1039 1SS83
C1118 150p SL
L1055 1.2µ
L1057 0.68µ
C1121 330p SL
L1059 1.2µ
C1124 110p SL
C1119 0.01 B
R1076 100
10-12MHz
C1123 0.01 B
C1125 10 50V
R1077 33
D1040 1SS83
L1061 8.2µ
C1128 15p SL
C1130 15p SL
L1063 8.2µ
D1041 1SS83
C1126 91p SL
L1060 1µ
L1062 0.56µ
C1129 270p SL
L1064 1µ
C1132 100p SL
C1127 0.01 B
R1078 100
12-15MHz
C1131 0.01 B
C1133 10 50V
R1079 33
D1042 1SS83
L1066 3.9µ
C1136 18p SL
C1138 18p SL
L1068 3.9µ
D1043 1SS83
VR1009 50K
D1009 1SS270
22-30
C1204 0.01 B
R1153 330
L1001 1µ
C1067 1µ
C1009 1 50V
R1031 8.2
R1030 150
C1052 0.047 F
R1042 330 1/4W
C1053 10 50V
C1051 0.1 F
ALC
!ALC
EXTALC
C1090 10K
R1091 1M
C1155 0.1 50V
C1158 0.22 50V
C1158 10 50V
C1157 0.01 B
R1092 4.7K
R1102 47K
C1156 10 50V
R1103 22K
D1050 RD4.7EB2
R1104 22K
11.8
3.29 (1.26)
2.7
R1118 39K
R1116 39K
Q1019-1 M5218AL
3.29 (1.26)
Q1019-2 M5218AL
R1117 220K
3.0 (1.26)
2.78 (2.78)
11.7
Transmit
Key Open (Closed)
DC Voltage
(Transmit)
age
Key
(Closed)
mit

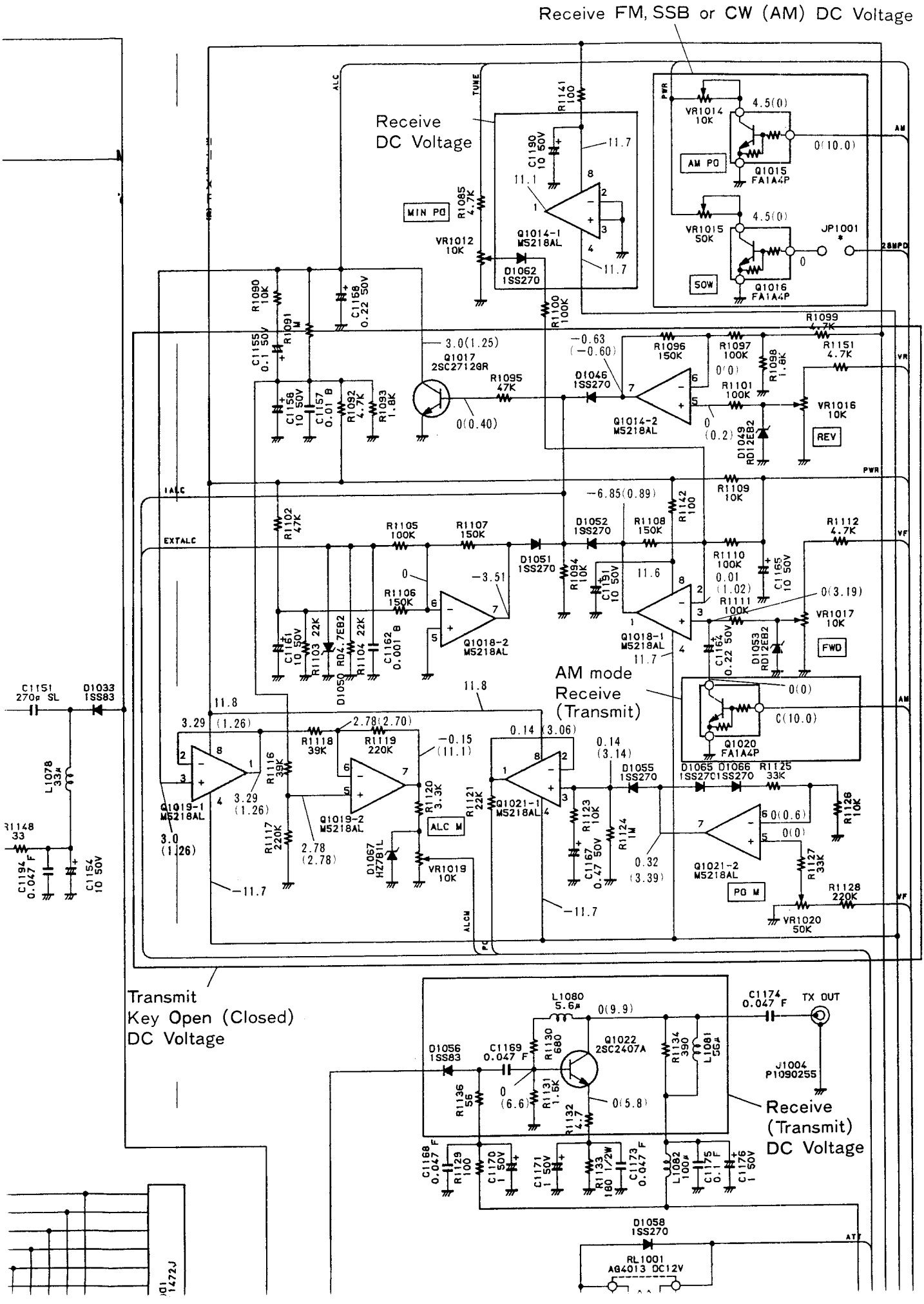
Receive FM, SSB or CW (AM) DC Voltage
Receive DC Voltage
Transmit Key Open (Closed) DC Voltage
AM mode Receive (Transmit)
Receive (Transmit) DC Voltage
MIN PO
AM PO
SSW
ALC
TUNE
PWR
AM
VF
REV
FWD
ALC M
PO M
ATT
TX OUT
Q1014-1 M5218AL
Q1014-2 M5218AL
Q1017 2SC2712GR
Q1018-1 M5218AL
Q1018-2 M5218AL
Q1019-1 M5218AL
Q1019-2 M5218AL
Q1020 FA1A4P
Q1021-1 M5218AL
Q1021-2 M5218AL
Q1022 2SC2407A
D1062 1SS270
D1046 1SS270
D1052 1SS270
D1051 1SS270
D1055 1SS270
D1065 1SS270
D1066 1SS270
D1058 1SS270
D1033 1SS83
D1056 1SS83
D1067 HZ7B1L
D1049 RD12EB2
D1053 RD12EB2
D1050 RD4.7EB2
RL1001 AG4013 DC12V
VR1014 10K
VR1015 50K
VR1012 10K
VR1016 10K
VR1017 10K
VR1019 10K
VR1020 50K
JP1001
28MPO
P1090255
J1004

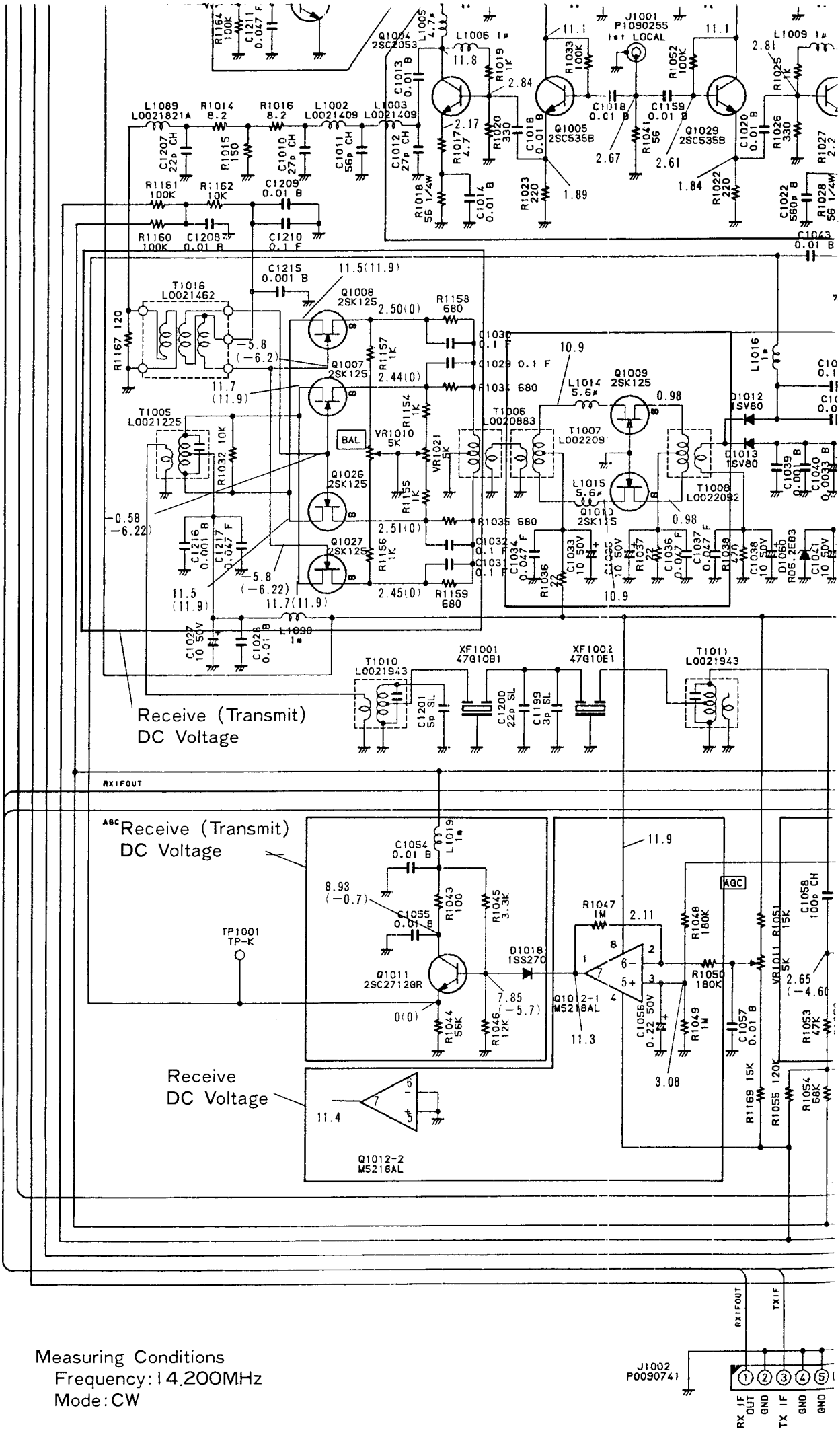
Receive (Transmit)
DC Voltage
Receive (Transmit)
DC Voltage
Receive
DC Voltage
Measuring Conditions
Frequency: 14.200MHz
Mode: CW

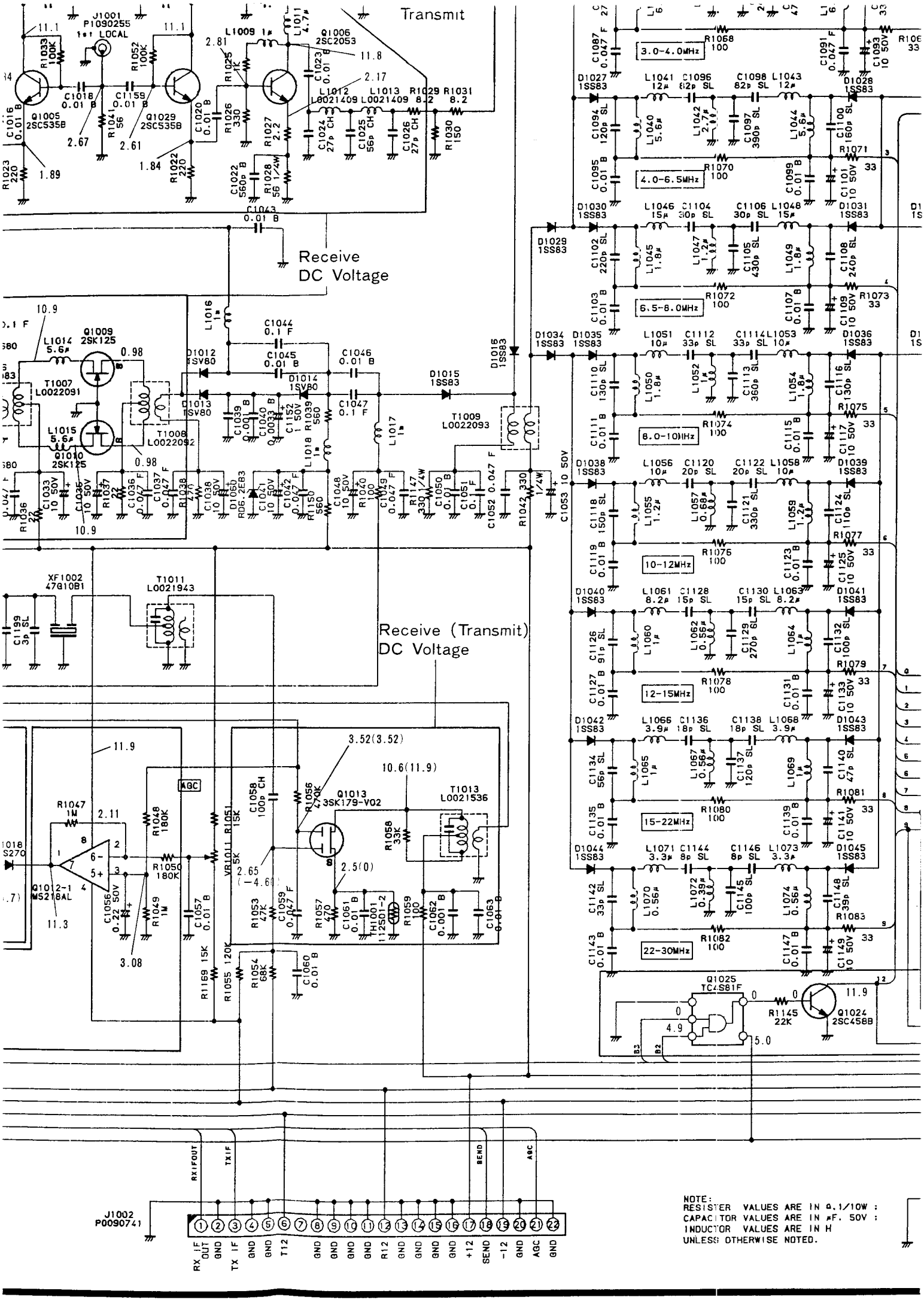
Transmit
Receive
DC Voltage
Receive (Transmit)
DC Voltage
J1001
P1090255
1st LOCAL
Q1005
2SC535B
Q1029
2SC535B
Q1006
2SC2053
Q1009
2SK125
Q1010
2SK125
T1007
L0022091
T1008
L0022092
T1009
L0022093
T1011
L0021943
XF1002
47G10B1
Q1013
3SK179-V02
T1013
L0021536
Q1012-1
MS218AL
Q1025
TC4S81F
Q1024
2SC4588
3.0-4.0MHz
4.0-6.5MHz
6.5-8.0MHz
8.0-10MHz
10-12MHz
12-15MHz
15-22MHz
22-30MHz
AGC
J1002
P0090741
RX IF OUT
TX IF
SEND
AGC
NOTE:
RESISTER VALUES ARE IN Ω,1/10W :
CAPACITOR VALUES ARE IN μF, 50V :
INDUCTOR VALUES ARE IN H
UNLESS OTHERWISE NOTED.

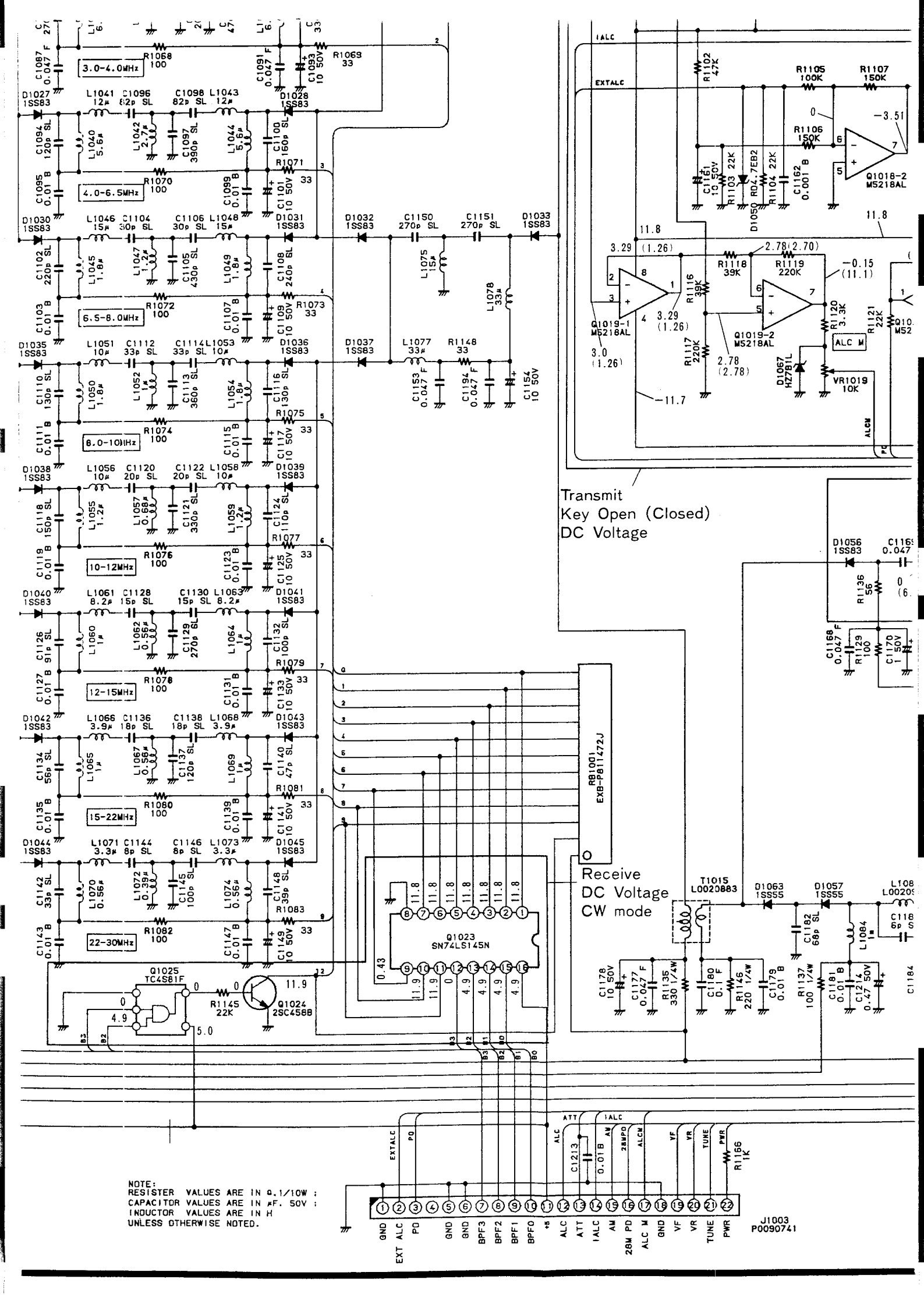
3.0-4.0MHz
4.0-6.5MHz
6.5-8.0MHz
8.0-10MHz
10-12MHz
12-15MHz
15-22MHz
22-30MHz
Transmit
Key Open (Closed)
DC Voltage
Receive
DC Voltage
CW mode
Q1023
SN74LS145N
Q1025
TC4S81F
Q1024
2SC458B
Q1018-2
M5218AL
Q1019-1
M5218AL
Q1019-2
M5218AL
T1015
L0020883
RB1001
EXB-P811472J
J1003
P0090741
NOTE:
RESISTER VALUES ARE IN Ω,1/10W ;
CAPACITOR VALUES ARE IN μF, 50V ;
INDUCTOR VALUES ARE IN H
UNLESS OTHERWISE NOTED.

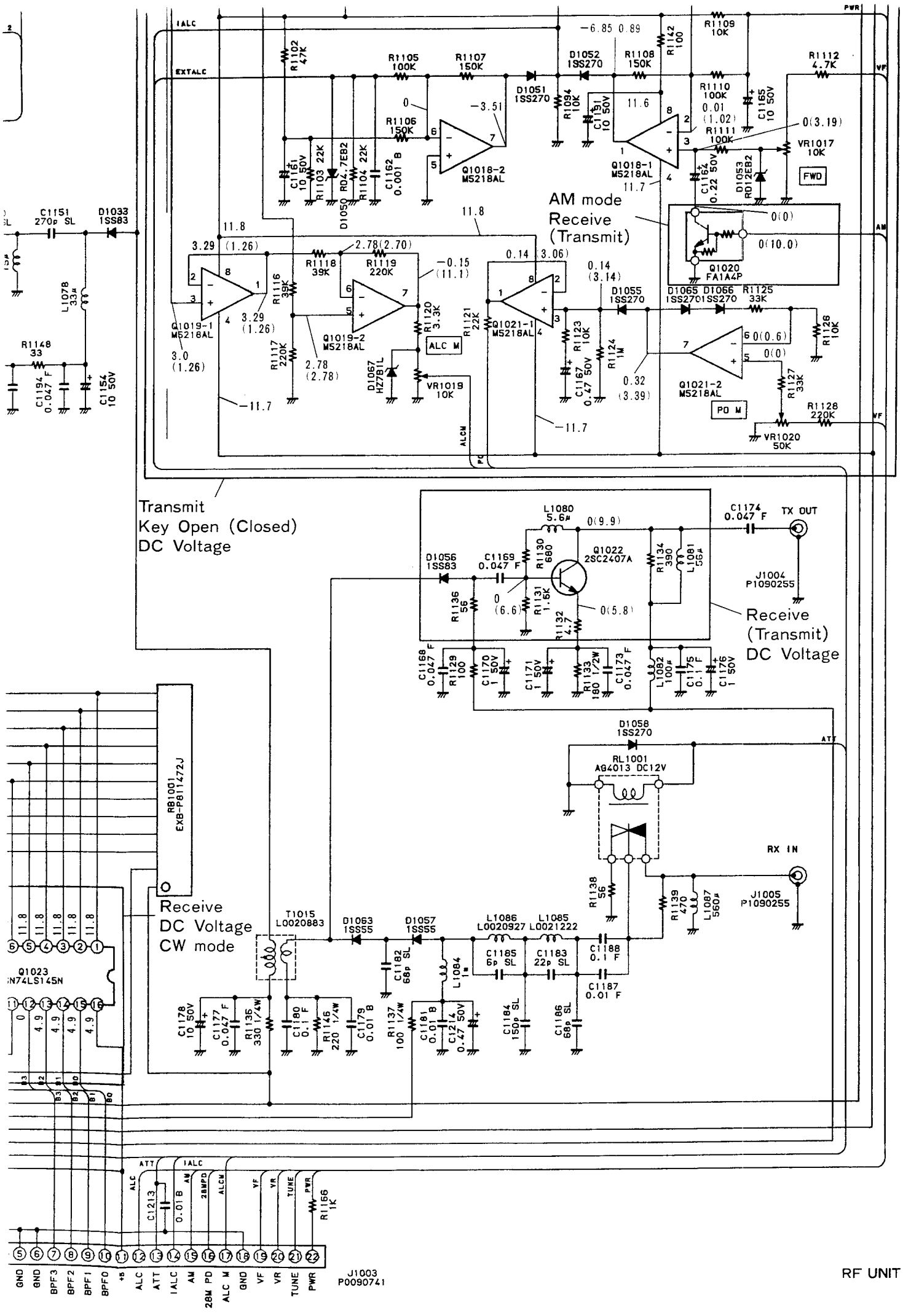
Transmit
Key Open (Closed)
DC Voltage
AM mode
Receive
(Transmit)
Receive
(Transmit)
DC Voltage
Receive
DC Voltage
CW mode
RF UNIT
J1003
P0090741

SOLDER SIDE

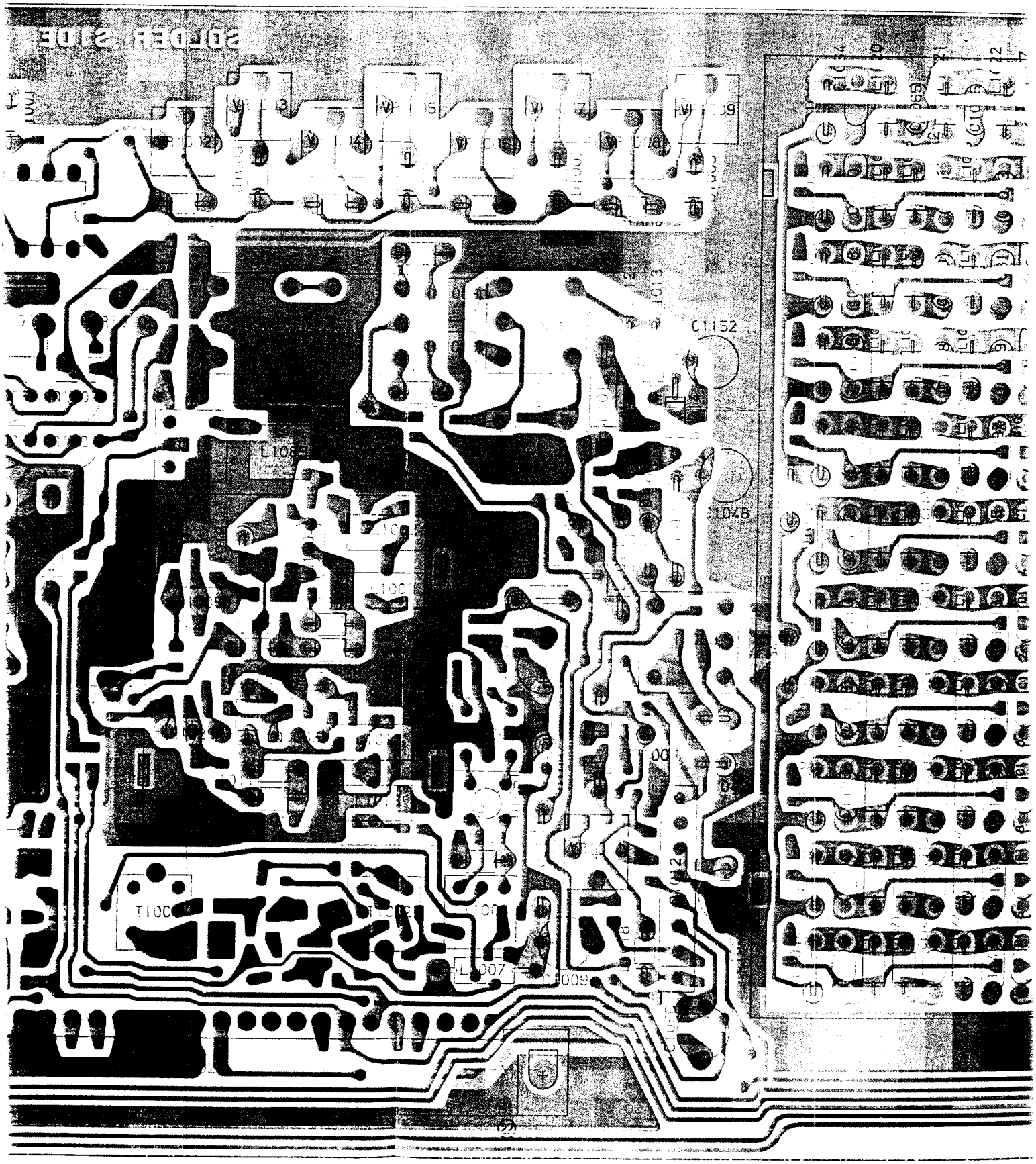
SOLDER SIDE
C1152
C1048
L1089
T100
L1007
C1009

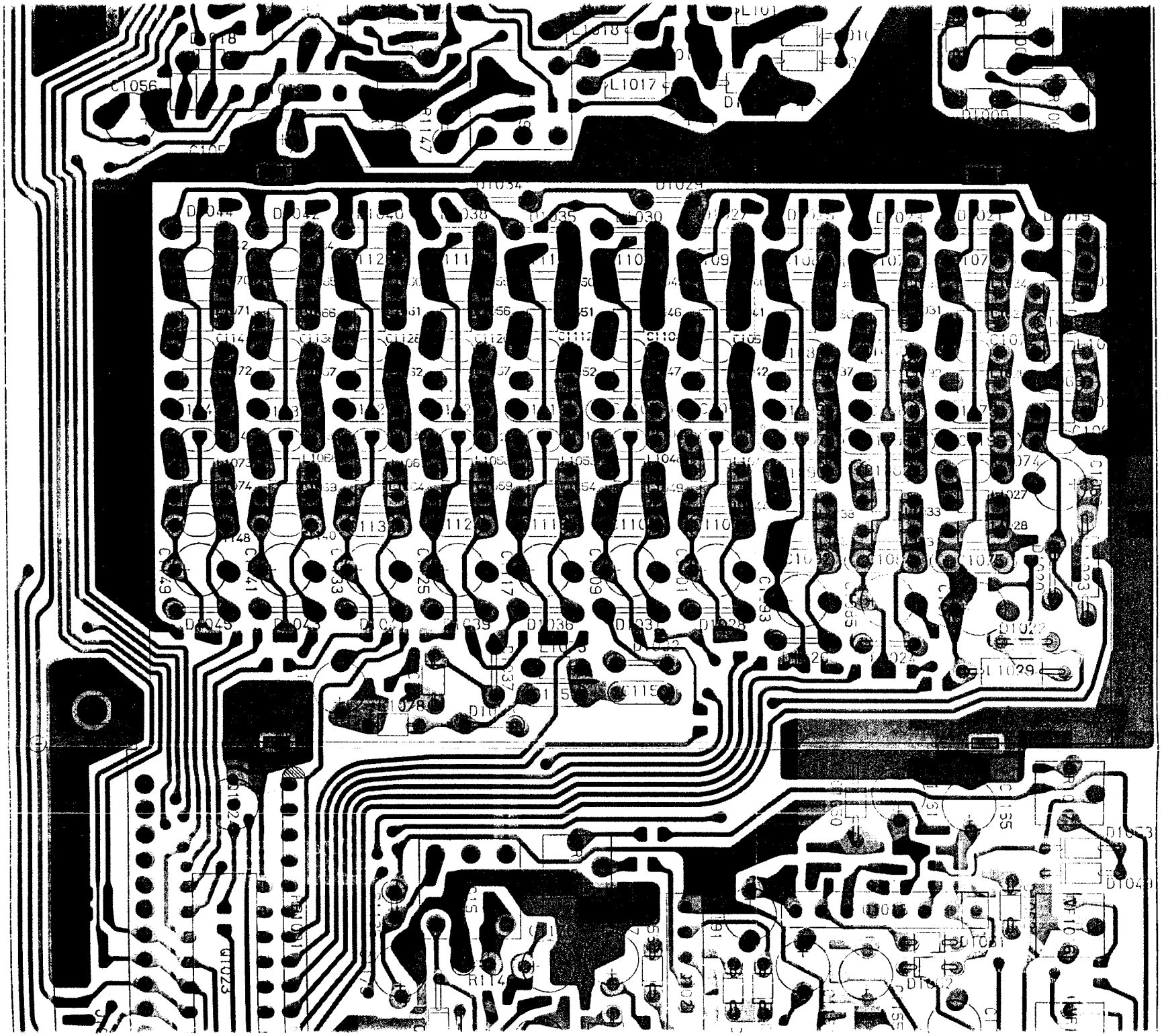

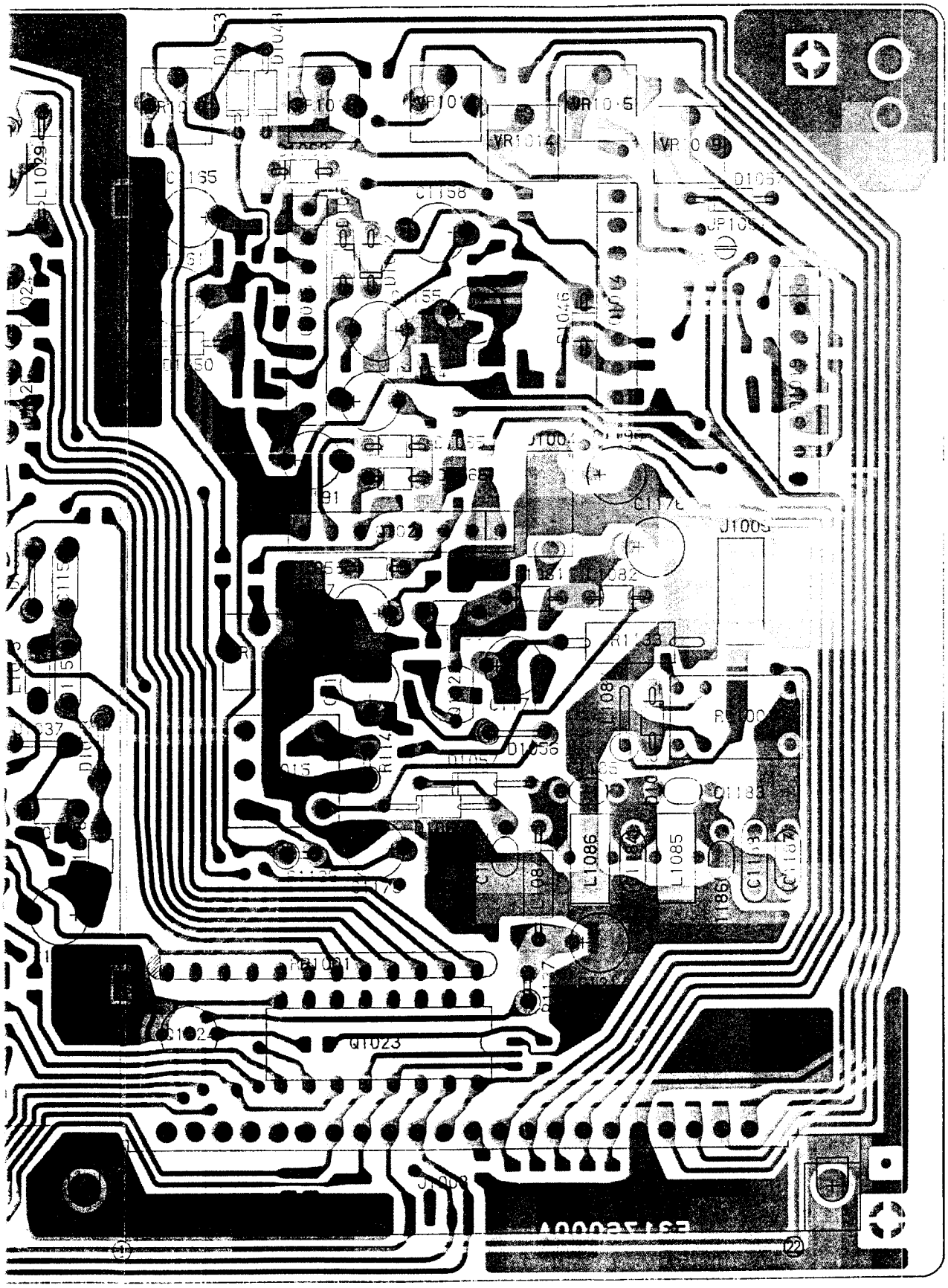

("component" side)

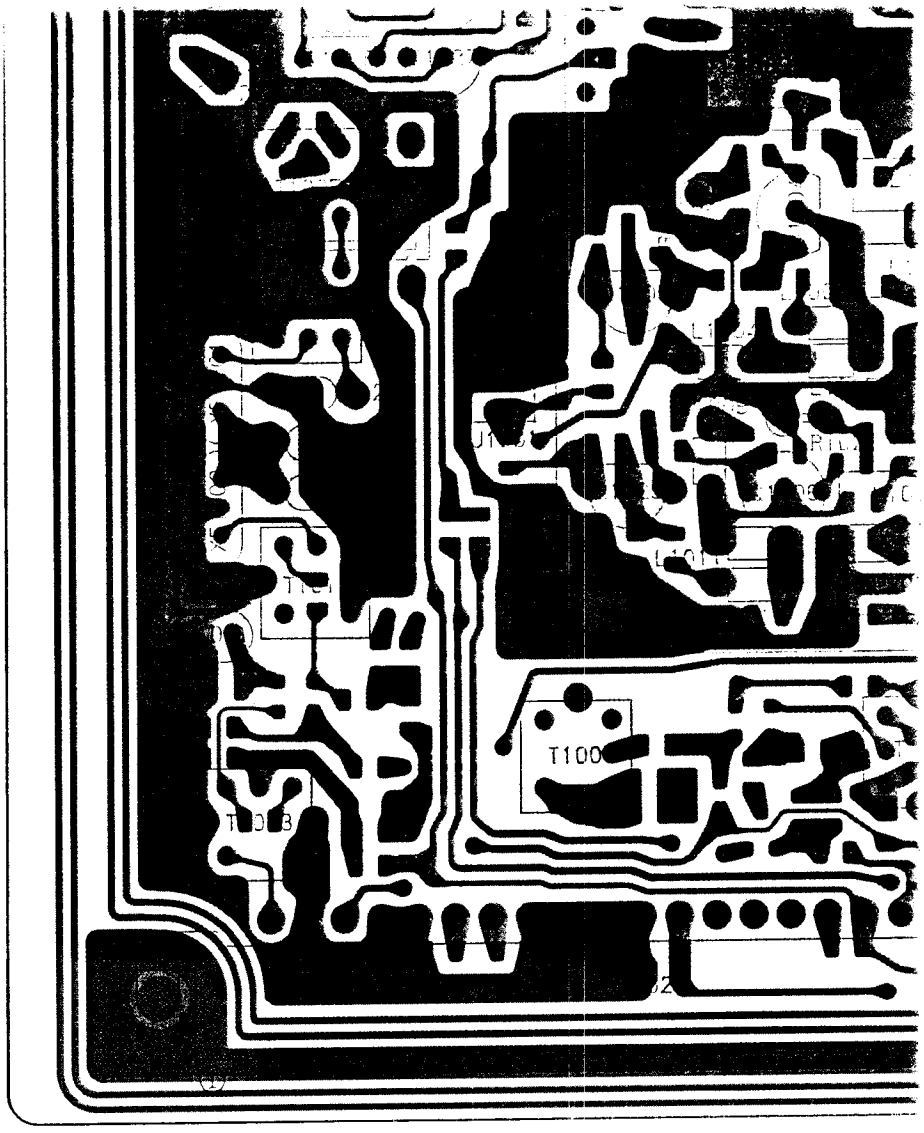

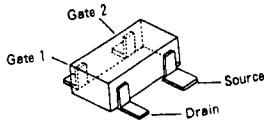

3SK131(V12)
(Q1002)
3SK179(V02)
(Q1013)

Collec

2SC262(
(Q1003)
2SC271
(Q1011,

FA1A4P
(Q1015,

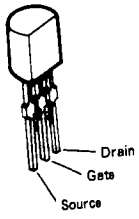

2SK125
(Q1007, 1008, 1009,
1010, 1026, 1027)

10K
R1
Base

FA1A4P C

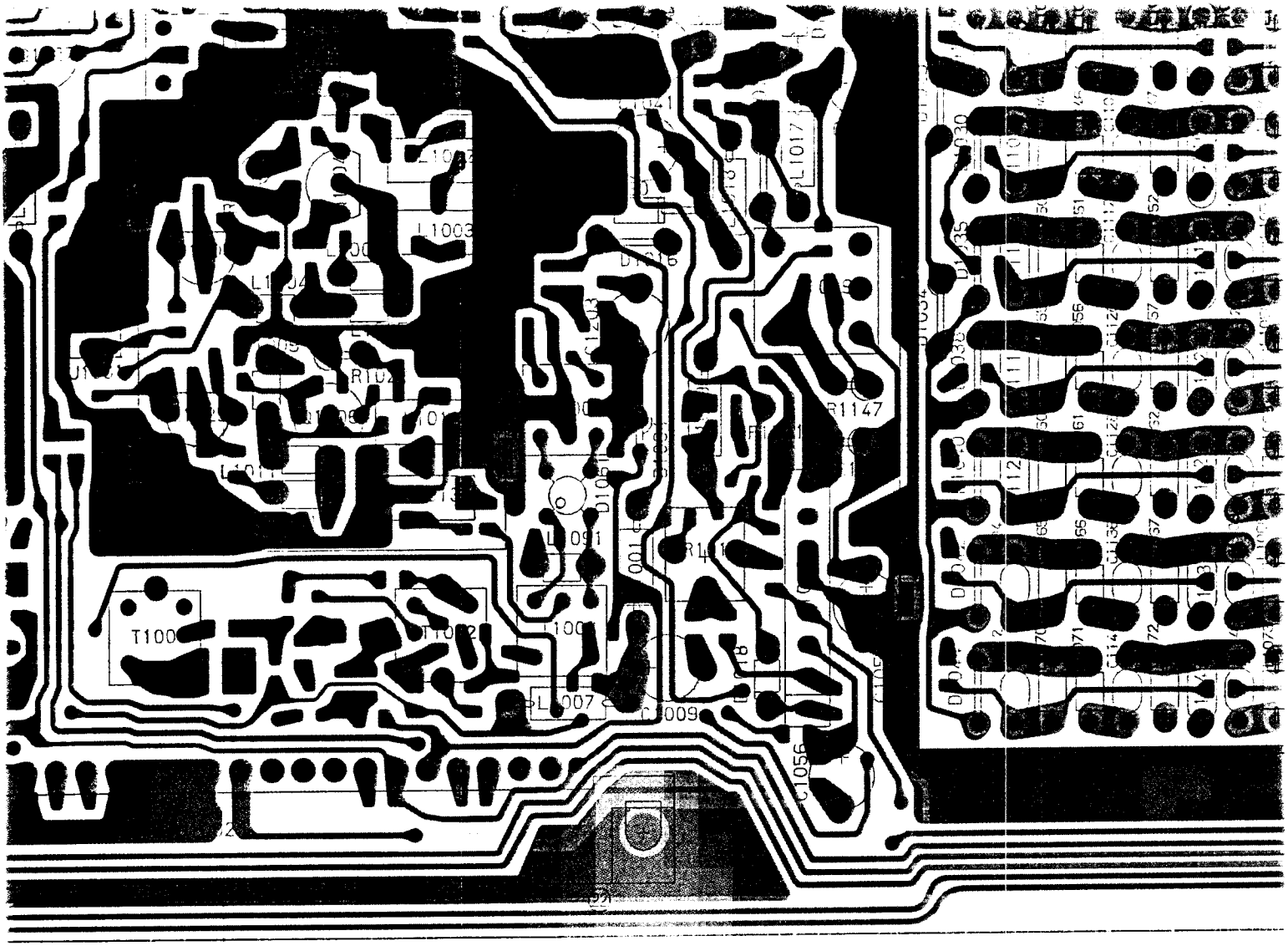

Source
rain

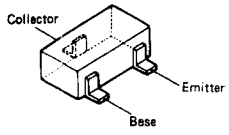

2SC2620(QB)
(Q1003)
2SC2712GR (LG)
(Q1011, 1017, 1028)

FA1A4P (L34)
(Q1015, 1016, 1020)

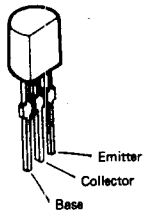

2SC535
(Q1005, 1029)
2SC2053
(Q1004, 1006)

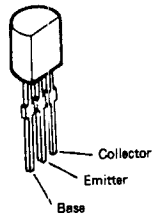

2SC458B
(Q1024)
2SC2407
(Q1022)

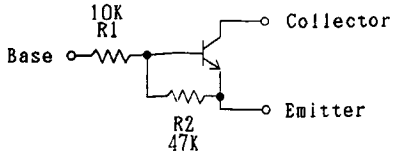

FA1A4P CIRCUIT DIAGRAM

09,
7)

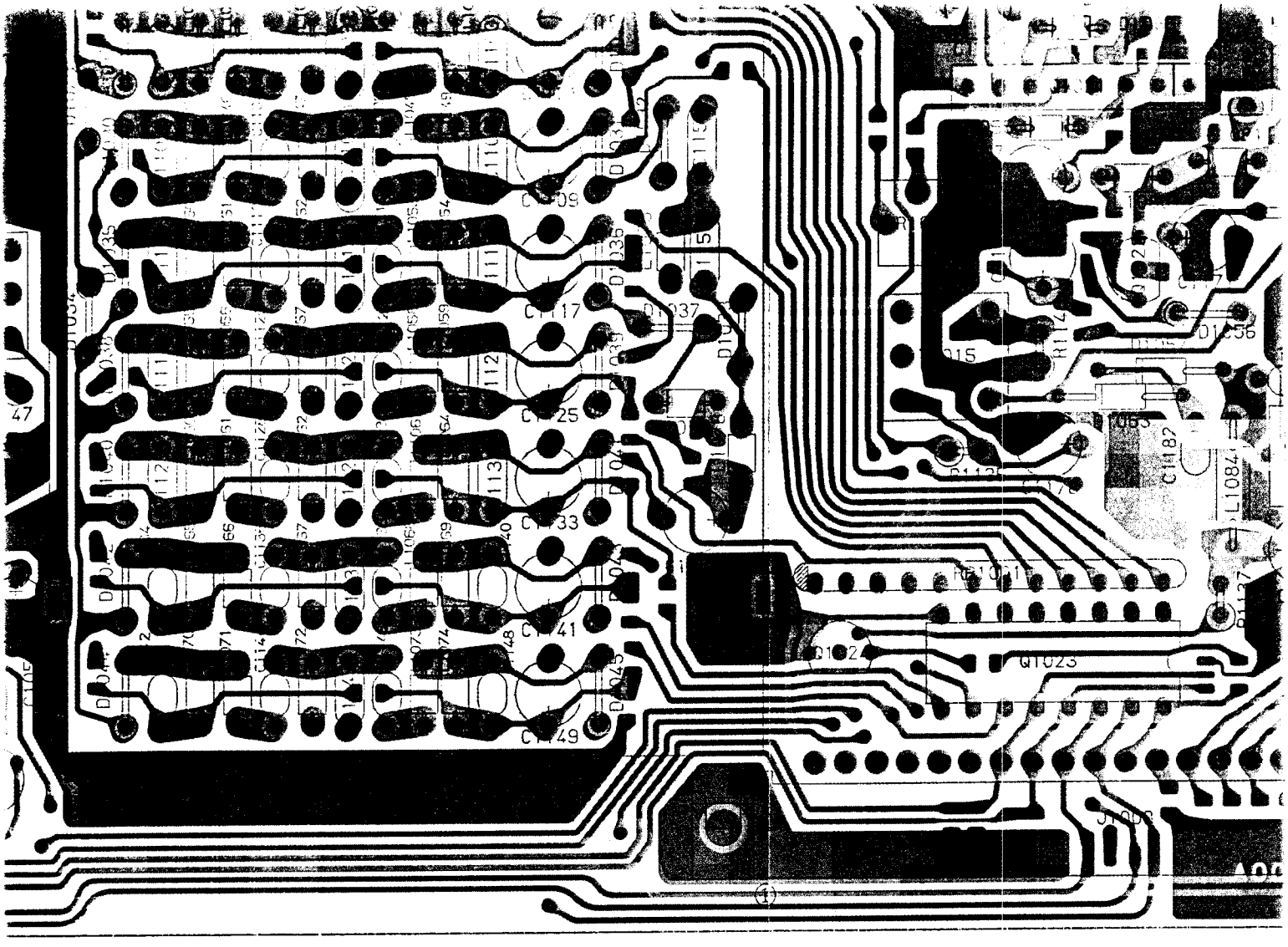

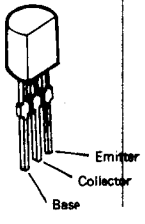

2SC535
(Q1005, 1029)
2SC2053
(Q1004, 1006)

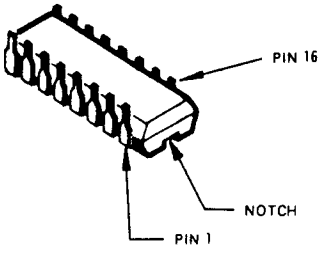

MC14028BCP
(Q1001)
SN74LS145N
(Q1023)

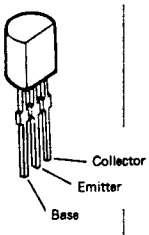

2SC458B
(Q1024)
2SC2407
(Q1022)

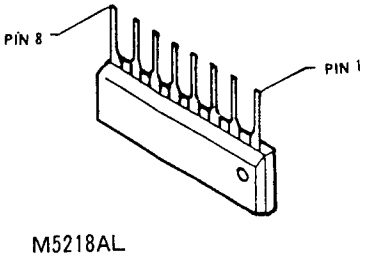

M5218AL
(Q1012, 1014, 1018,
1019, 1021)

("component" side)

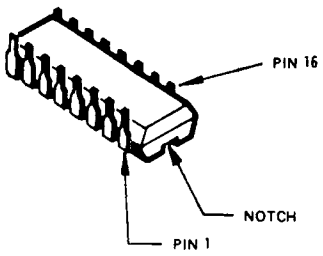

MC14028BCP
(Q1001)
SN74LS145N
(Q1023)

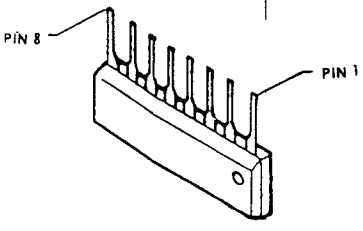

M5218AL
(Q1012, 1014, 1018,
1019, 1021)

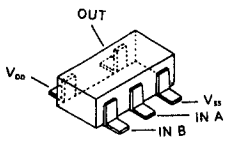

TC4S81F (C2)
(Q1025)

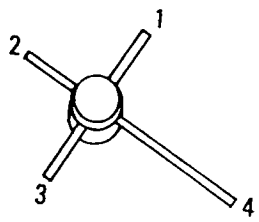

ND487C2-3R
(D1061)

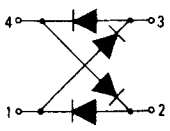

ND487C2-3R CIRCUIT DIAGRAM

RF UNIT

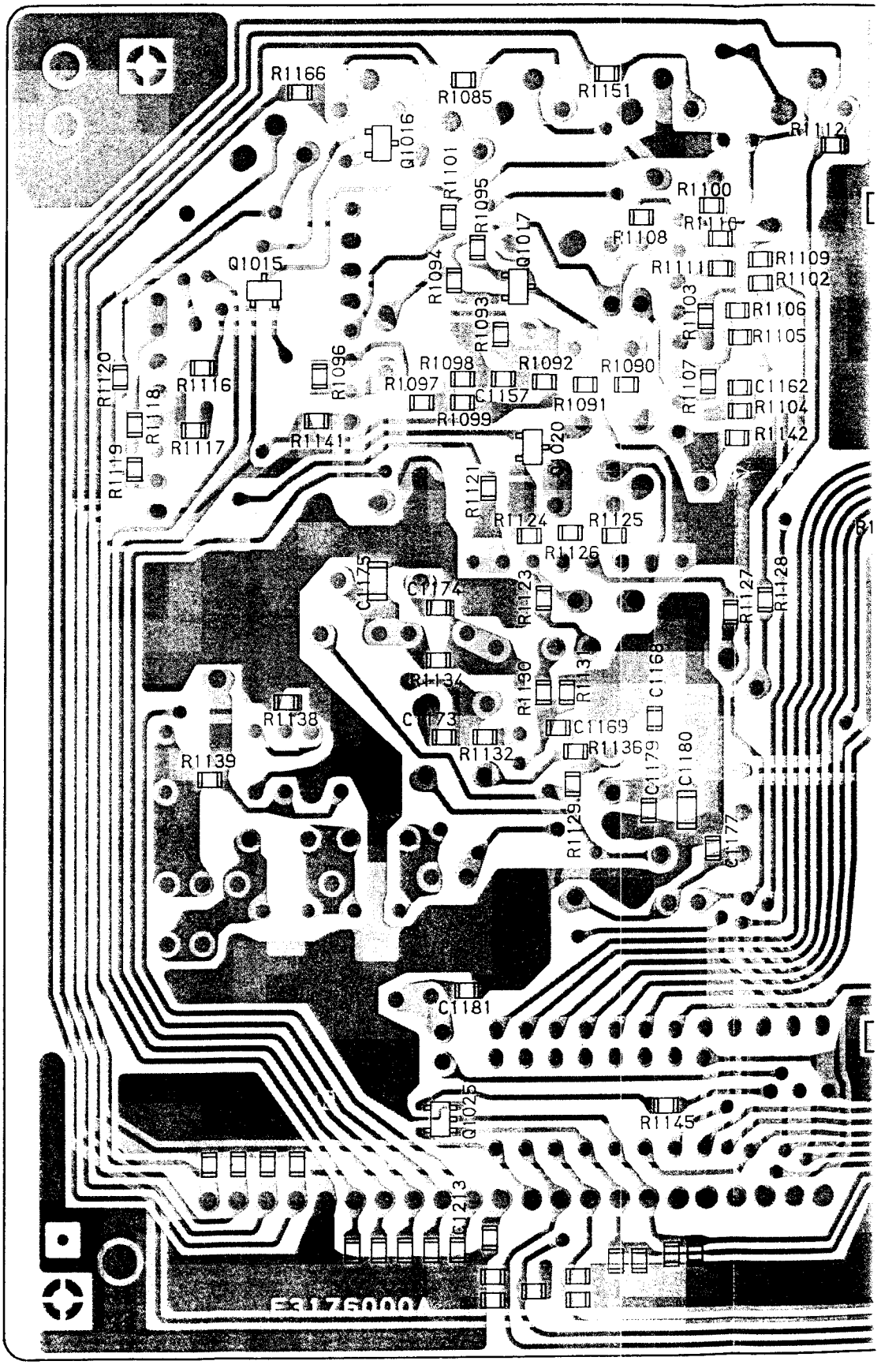
R1166
R1085
R1151
R1112
Q1016
R1101
R1095
R1100
R1110
R1108
Q1017
R1109
R1111
R1102
Q1015
R1094
R1103
R1106
R1093
R1105
R1120
R1096
R1098
R1092
R1090
R1107
C1162
R1116
R1097
C1157
R1091
R1104
R1118
R1099
R1142
R1117
R1141
Q1020
R1119
R1121
R1124
R1125
R1126
C1175
C1174
R1123
R1127
R1128
R1134
R1130
R1131
C1168
R1138
C1173
C1169
R1136
R1132
R1139
C1179
C1180
R1129
C1177
C1181
Q1025
R1145
C1213
E3176000A

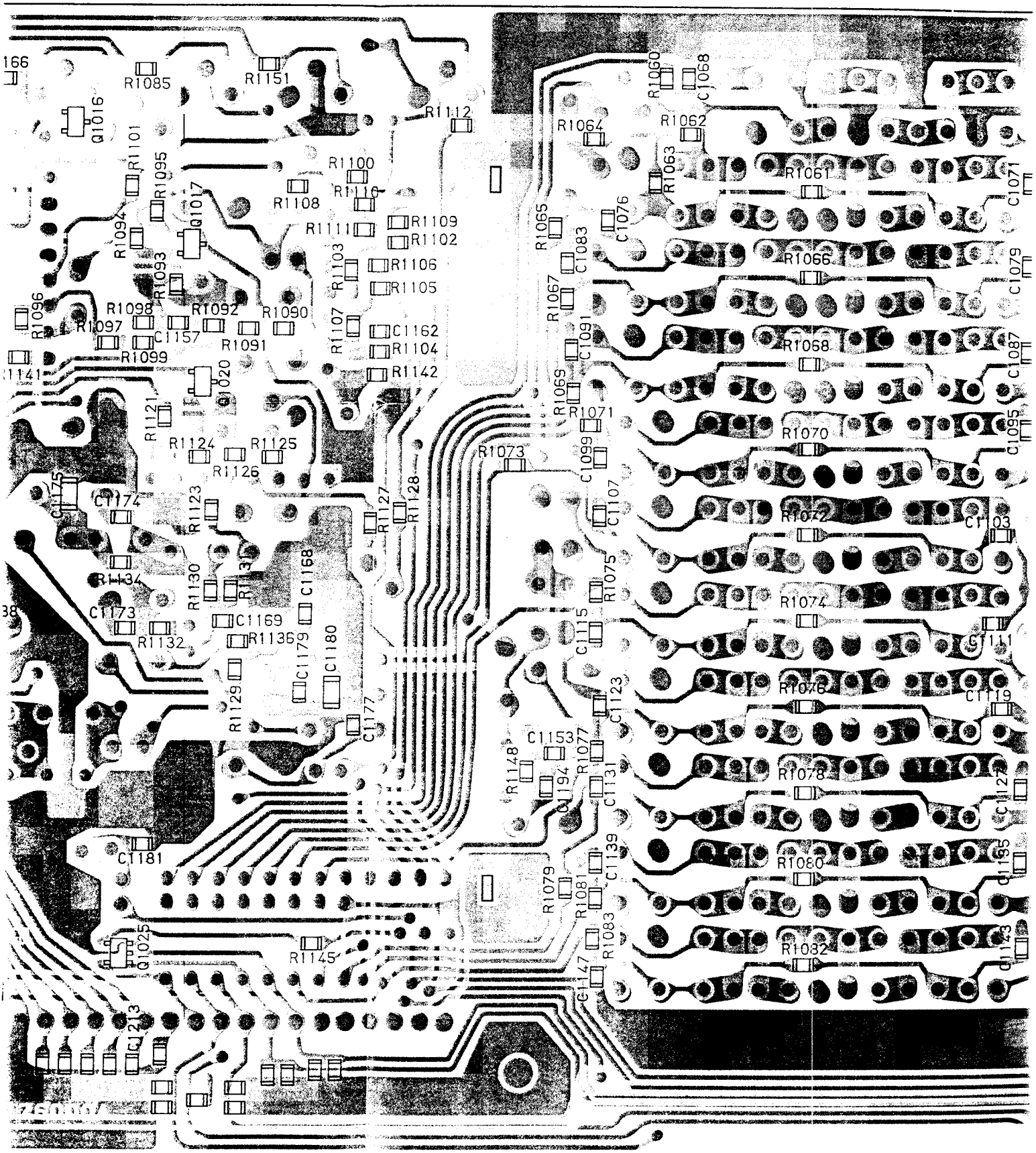
R1085
R1151
Q1016
R1112
R1101
R1095
R1100
R1108
Q1017
R1094
R1111
R1109
R1102
R1093
R1103
R1106
R1105
R1096
R1098
R1092
R1090
R1097
C1157
R1091
C1162
R1107
R1104
R1099
R1142
Q1020
R1121
R1124
R1125
R1126
R1073
C1175
C1174
R1123
R1127
R1128
C1107
R1134
R1130
R1131
C1168
C1173
C1169
R1132
R1136
C1179
C1180
R1129
C1177
C1181
Q1025
R1145
C1213
R1060
C1068
R1064
R1062
R1063
R1061
C1071
R1065
C1076
C1083
R1066
C1079
R1067
C1091
R1068
C1087
R1069
R1071
C1099
R1070
C1095
R1072
C1103
R1075
R1074
C1115
C1111
C1123
R1078
C1119
R1148
C1153
R1077
C1194
C1131
C1127
R1078
C1139
R1079
R1081
R1080
C1135
R1083
R1082
C1143
C1147

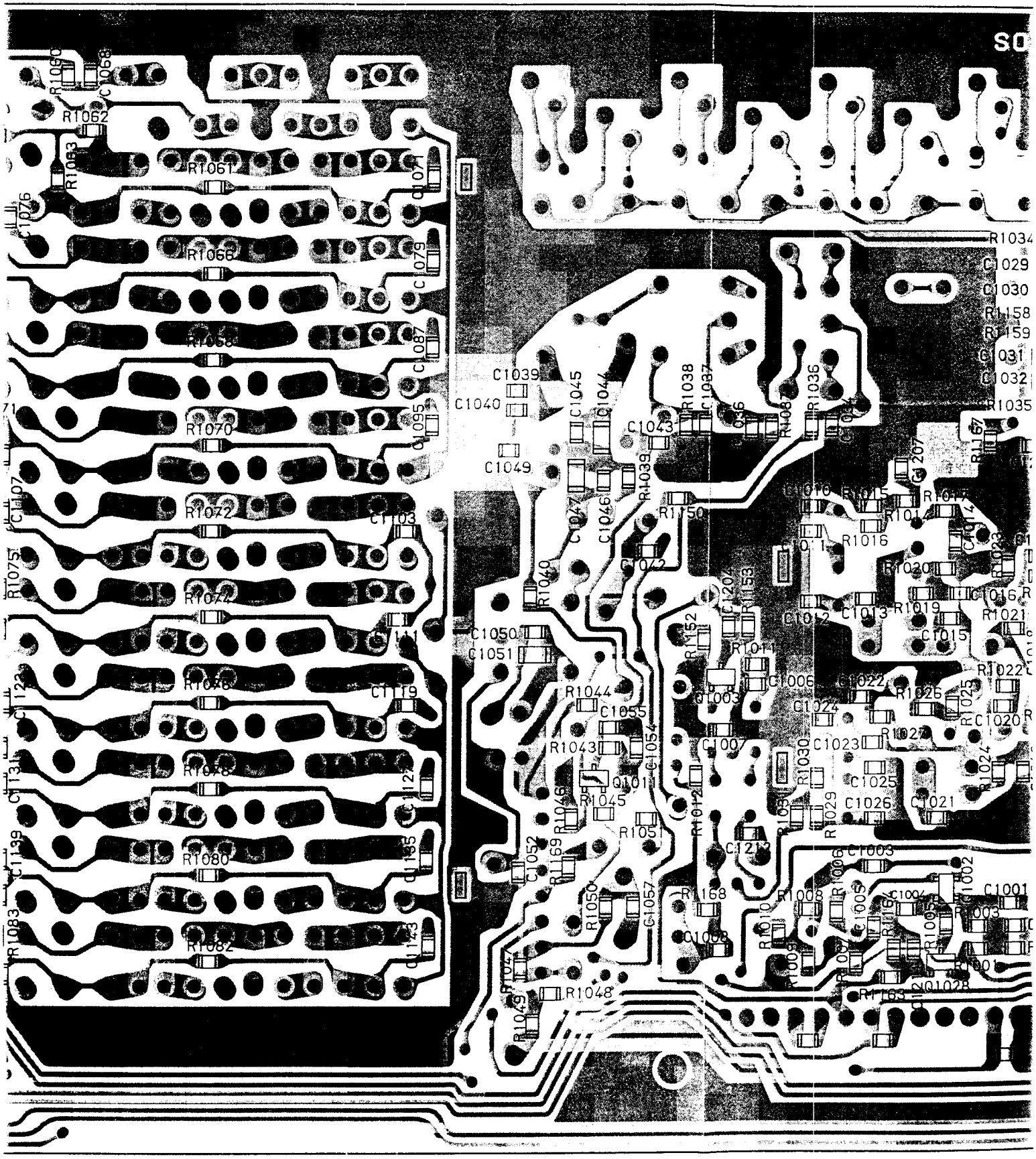
R1060
C1068
R1062
R1063
R1061
C1071
C1076
R1066
C1079
R1068
C1087
R1070
C1095
C1107
R1072
C1103
R1075
R1074
C1111
C1123
R1076
C1119
C1131
R1078
C1122
C1139
R1080
C1135
R1083
R1082
C1143
C1039
C1040
C1049
C1045
C1044
C1047
C1046
R1038
C1037
C1036
R1087
R1036
C1043
R1039
R1150
C1042
R1040
C1050
C1051
R1044
C1055
R1043
C1054
Q1011
R1045
R1046
R1051
C1052
R1169
R1050
C1057
R1048
R1049
R1034
C1029
C1030
R1158
R1159
C1031
C1032
R1035
C1207
R1167
C1010
R1015
R1017
R1014
R1016
C1011
R1020
C1016
R1021
C1012
C1013
R1019
C1015
R1152
R1011
C1006
C1022
R1026
R1022
Q1003
C1024
R1025
C1020
C1007
C1023
R1027
R1030
R1024
C1025
R1012
R1029
C1026
C1021
C1212
C1003
R1168
R1008
C1004
C1001
C1008
R1003
R1001
Q1028
R1163

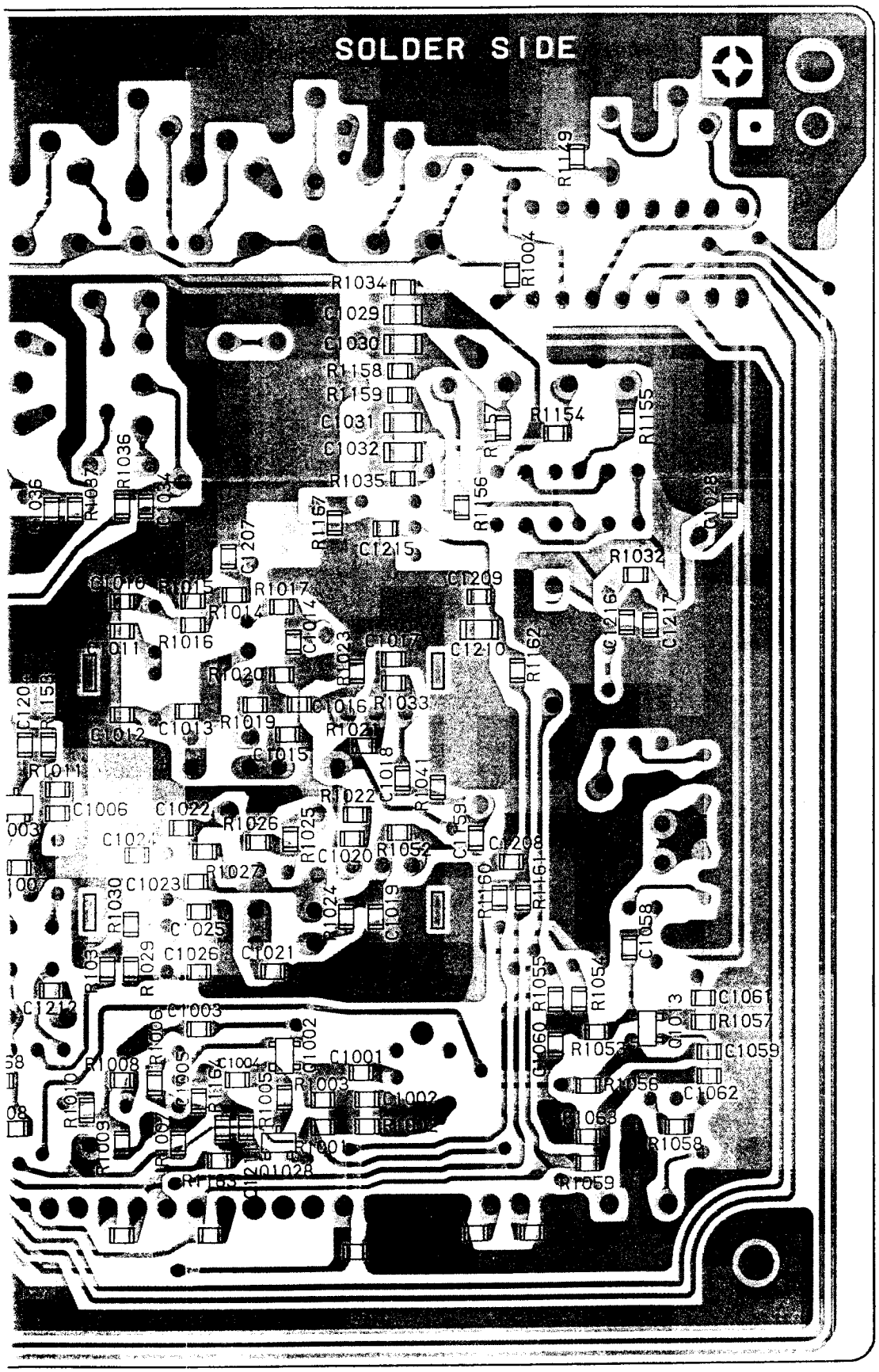

("chip only" side)

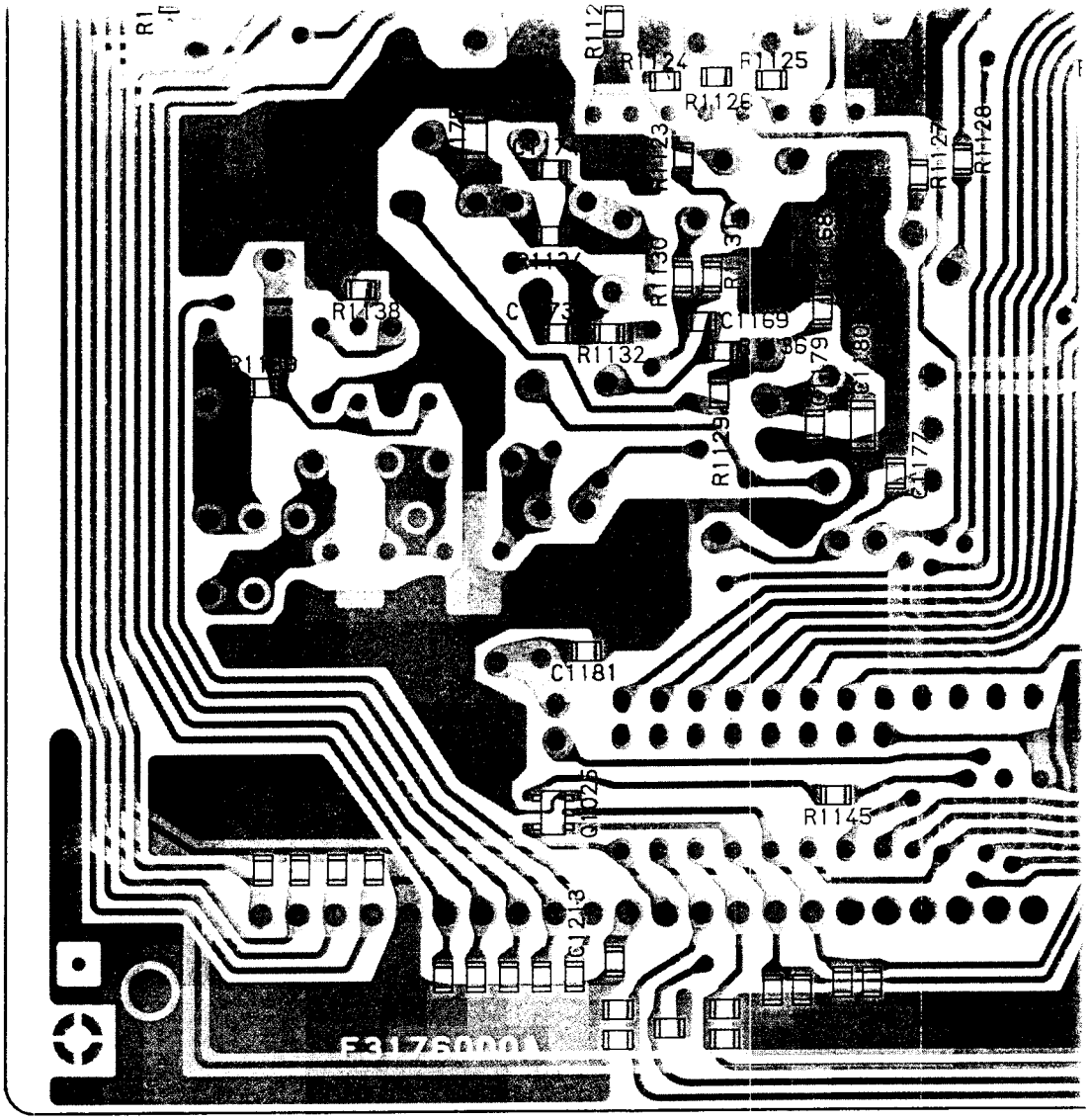
R1124
R1125
R1126
R1127
R1128
R1138
R1132
C1169
C1181
R1145
E31760001

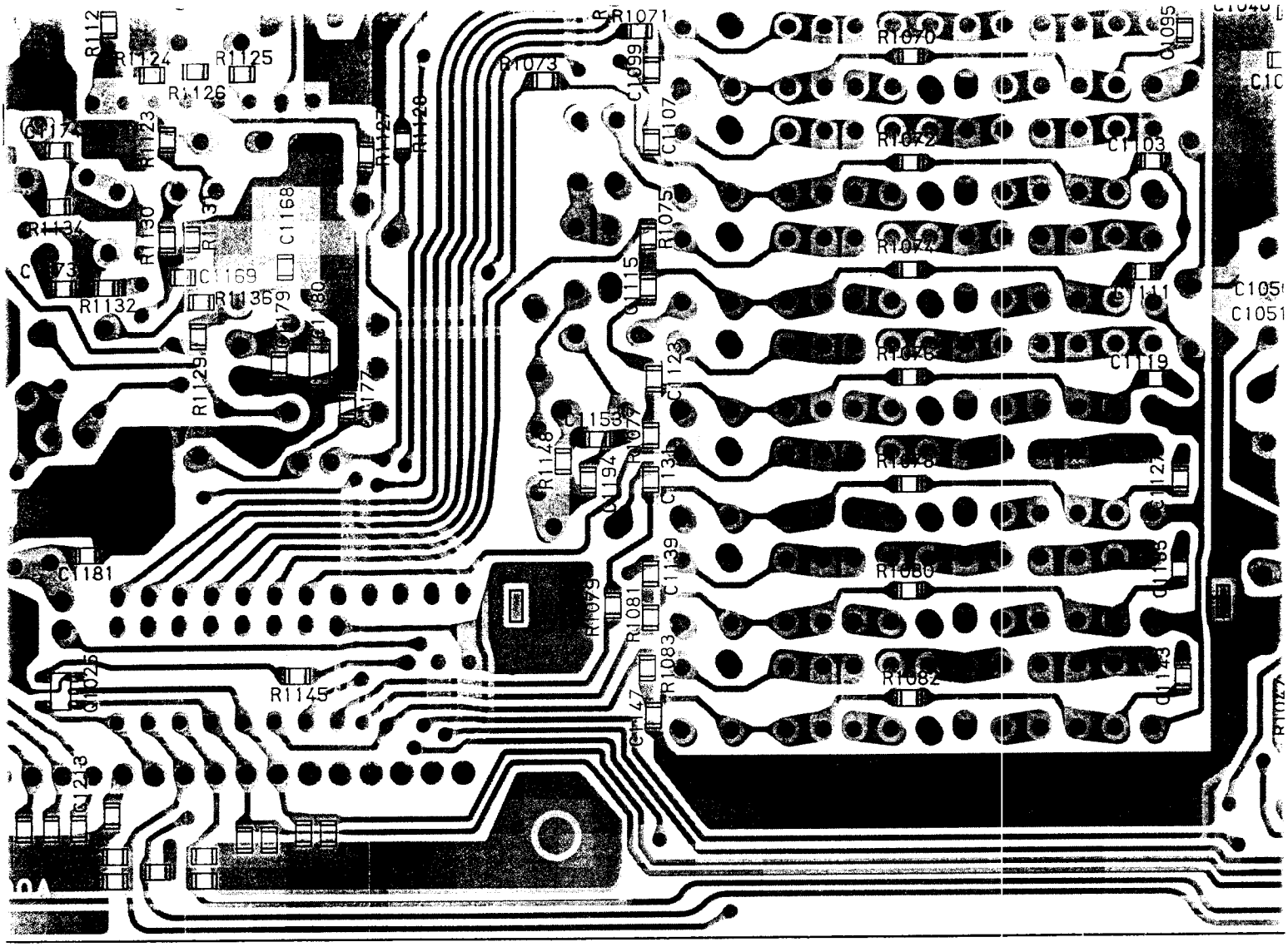
R1124
R1125
R1126
R1123
R1127
R1128
R1134
R1130
C1168
C1169
R1132
R1136
R1129
R1148
C1181
R1145
R1071
R1073
C1099
C1107
R1075
C1115
C1123
C1153
C1194
C1131
C1139
R1079
R1081
R1083
C1147
R1070
R1072
R1074
R1076
R1078
R1080
R1082
C1095
C1103
C1111
C1119
C1127
C1135
C1143
C1051

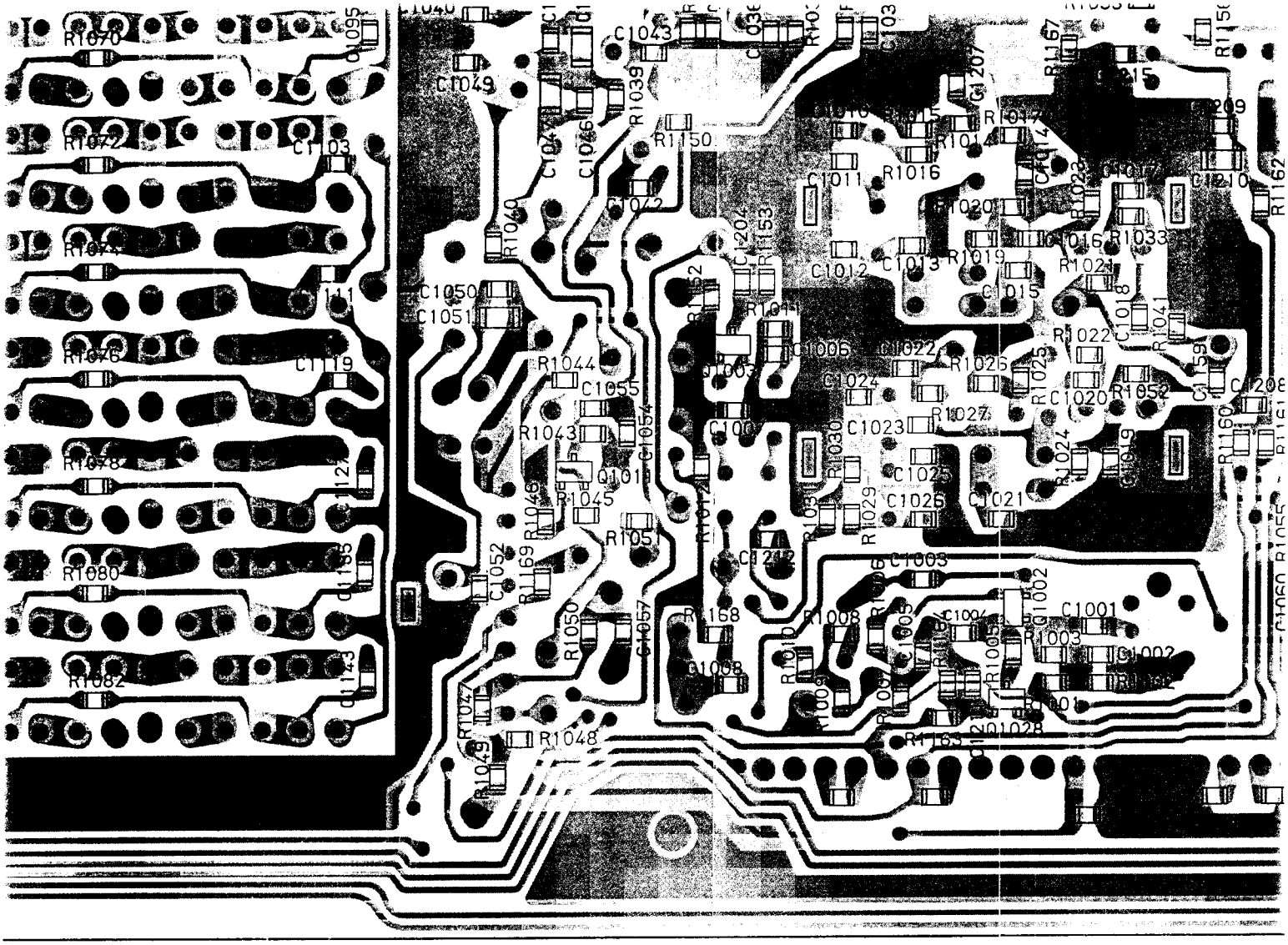
R1070
R1072
C1103
R1074
C1111
R1076
C1119
R1078
R1080
R1082
C1095
C1043
C1049
R1039
R1150
C1047
C1046
C1042
R1040
C1050
C1051
R1044
C1055
R1043
C1054
Q1011
R1045
R1046
R1051
C1052
R1169
R1050
C1057
R1168
C1008
R1047
R1048
R1049
C1204
R1153
R1152
R1011
Q1003
C1006
C1022
R1026
C1024
R1027
C1023
R1030
C1025
C1026
C1021
R1029
R1031
R1012
C1212
C1003
R1008
R1010
R1009
R1007
R1006
C1005
C1004
R1005
R1004
R1003
Q1002
C1001
C1002
R1002
R1001
Q1028
R1163
C1207
R1017
R1014
C1014
C1011
R1016
R1020
C1012
C1013
R1019
C1015
R1023
C1017
C1016
R1033
R1021
C1018
R1041
R1022
R1025
C1020
R1052
C1159
C1208
R1160
R1024
C1019
R1167
R1150
C1209
C1210
R1162
C1060
R1055

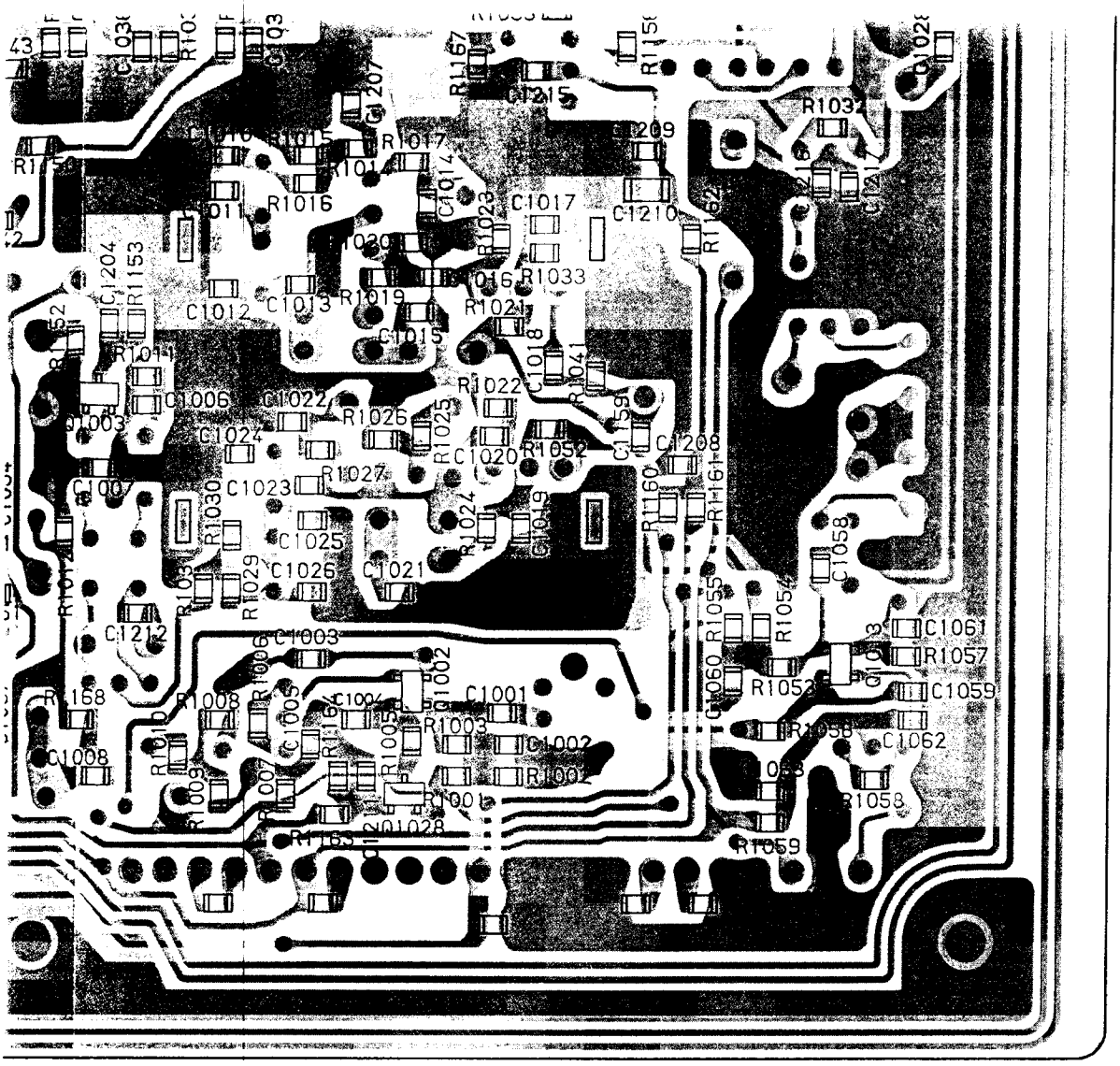

("chip only" side)

F3177000A

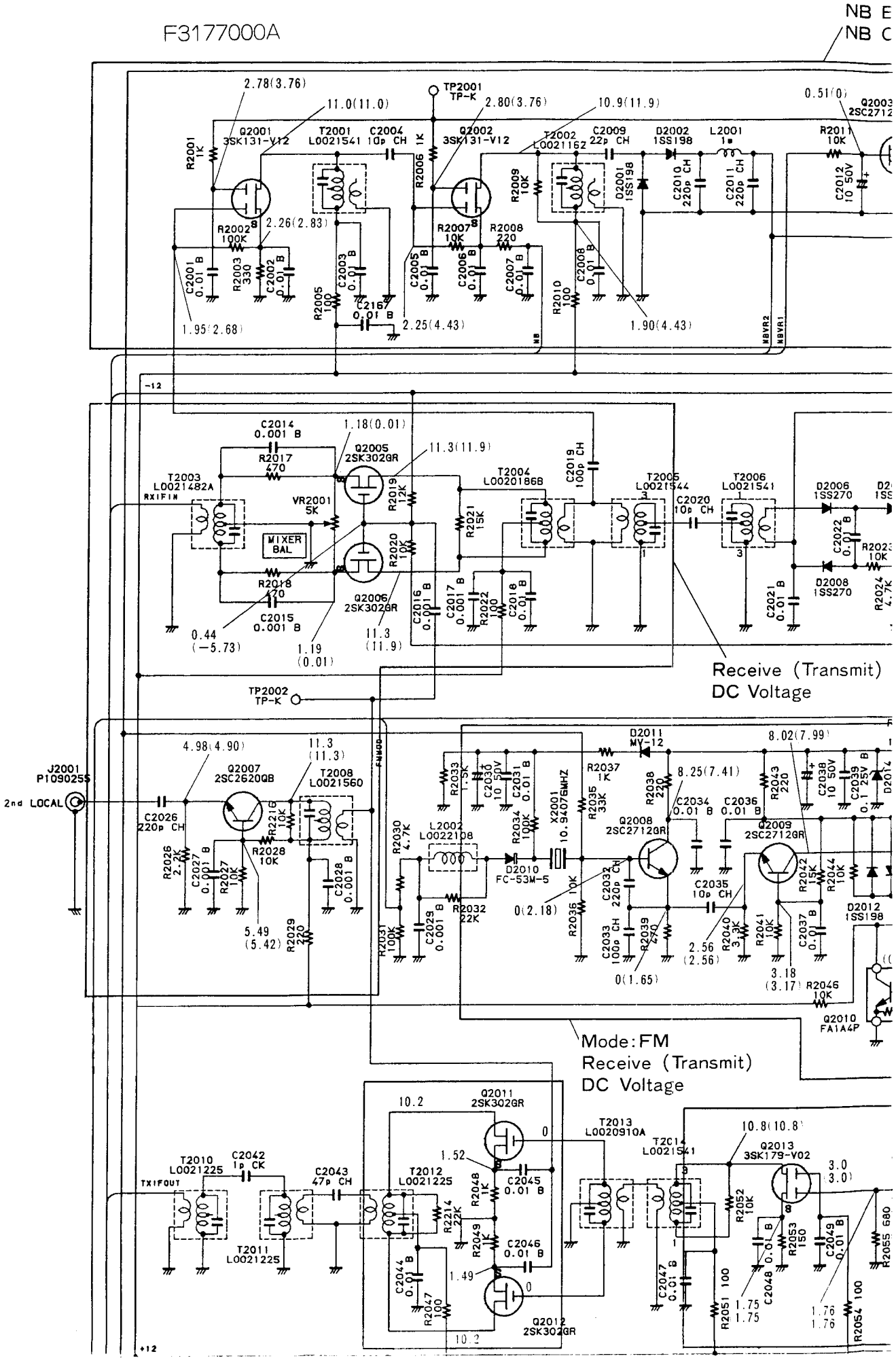
NB E
NB C
TP2001
TP-K
Q2001
3SK131-V12
Q2002
3SK131-V12
Q2003
2SC2712
T2001
L0021541
T2002
L0021162
D2001
1SS198
D2002
1SS198
L2001
R2001
1K
R2002
100K
R2003
330
R2004
1K
R2005
100
R2006
1K
R2007
10K
R2008
220
R2009
10K
R2010
100
R2011
10K
R2012
10 50V
C2001
0.01 B
C2002
0.01 B
C2003
0.01 B
C2004
10p CH
C2005
0.01 B
C2006
0.01 B
C2007
0.01 B
C2008
0.01 B
C2009
22p CH
C2010
220p CH
C2011
220p CH
C2167
0.01 B
2.78(3.76)
11.0(11.0)
2.80(3.76)
10.9(11.9)
0.51(0)
2.26(2.83)
1.95(2.68)
2.25(4.43)
1.90(4.43)
NB
NBVR2
NBVR1
-12
C2014
0.001 B
R2017
470
Q2005
2SK302GR
Q2006
2SK302GR
T2003
L0021482A
RXIFIN
VR2001
5K
MIXER
BAL
R2018
470
C2015
0.001 B
R2019
12K
R2020
10K
R2021
15K
T2004
L0020186B
C2019
100p CH
T2005
L0021544
C2020
10p CH
T2006
L0021541
D2006
1SS270
D2008
1SS270
C2021
0.01 B
C2022
0.01 B
R2023
10K
R2024
4.7K
C2016
0.001 B
C2017
0.001 B
R2022
100
C2018
0.001 B
1.18(0.01)
11.3(11.9)
0.44
(-5.73)
1.19
(0.01)
11.3
(11.9)
Receive (Transmit)
DC Voltage
TP2002
TP-K
J2001
P1090255
2nd LOCAL
C2026
220p CH
Q2007
2SC2620QB
T2008
L0021560
R2216
10K
R2026
2.2K
C2027
0.001 B
R2027
10K
R2028
10K
C2028
0.001 B
R2029
220
4.98(4.90)
11.3
(11.3)
5.49
(5.42)
FMMOD
D2011
MV-12
R2033
1.5K
C2030
10 50V
C2031
0.01 B
R2034
100K
X2001
10.9407BMHZ
R2035
33K
R2037
1K
R2038
220
C2034
0.01 B
C2036
0.01 B
R2043
220
C2038
10 50V
C2039
0.1 25V B
D2014
8.02(7.99)
8.25(7.41)
L2002
L0022108
D2010
FC-53M-5
R2030
4.7K
R2031
100K
C2029
0.001 B
R2032
22K
Q2008
2SC2712GR
Q2009
2SC2712GR
C2032
220p CH
C2033
100p CH
R2036
10K
R2039
470
C2035
10p CH
R2040
3.3K
R2041
10K
R2042
15K
R2044
10K
C2037
0.01 B
D2012
1SS198
R2046
10K
Q2010
FA1A4P
0(2.18)
0(1.65)
2.56
(2.56)
3.18
(3.17)
Mode:FM
Receive (Transmit)
DC Voltage
+12
10.2
Q2011
2SK302GR
Q2012
2SK302GR
T2010
L0021225
C2042
1p CK
T2011
L0021225
C2043
47p CH
T2012
L0021225
T2013
L0020910A
T2014
L0021541
Q2013
3SK179-V02
R2048
1K
R2049
1K
R2214
22K
C2044
0.01 B
C2045
0.01 B
C2046
0.01 B
R2047
100
1.52
1.49
R2051
100
R2052
10K
R2053
150
C2047
0.01 B
C2048
0.01 B
C2049
0.01 B
R2054
100
R2055
680
10.8(10.8)
3.0
(3.0)
1.75
1.75
1.76
1.76
TXIFOUT

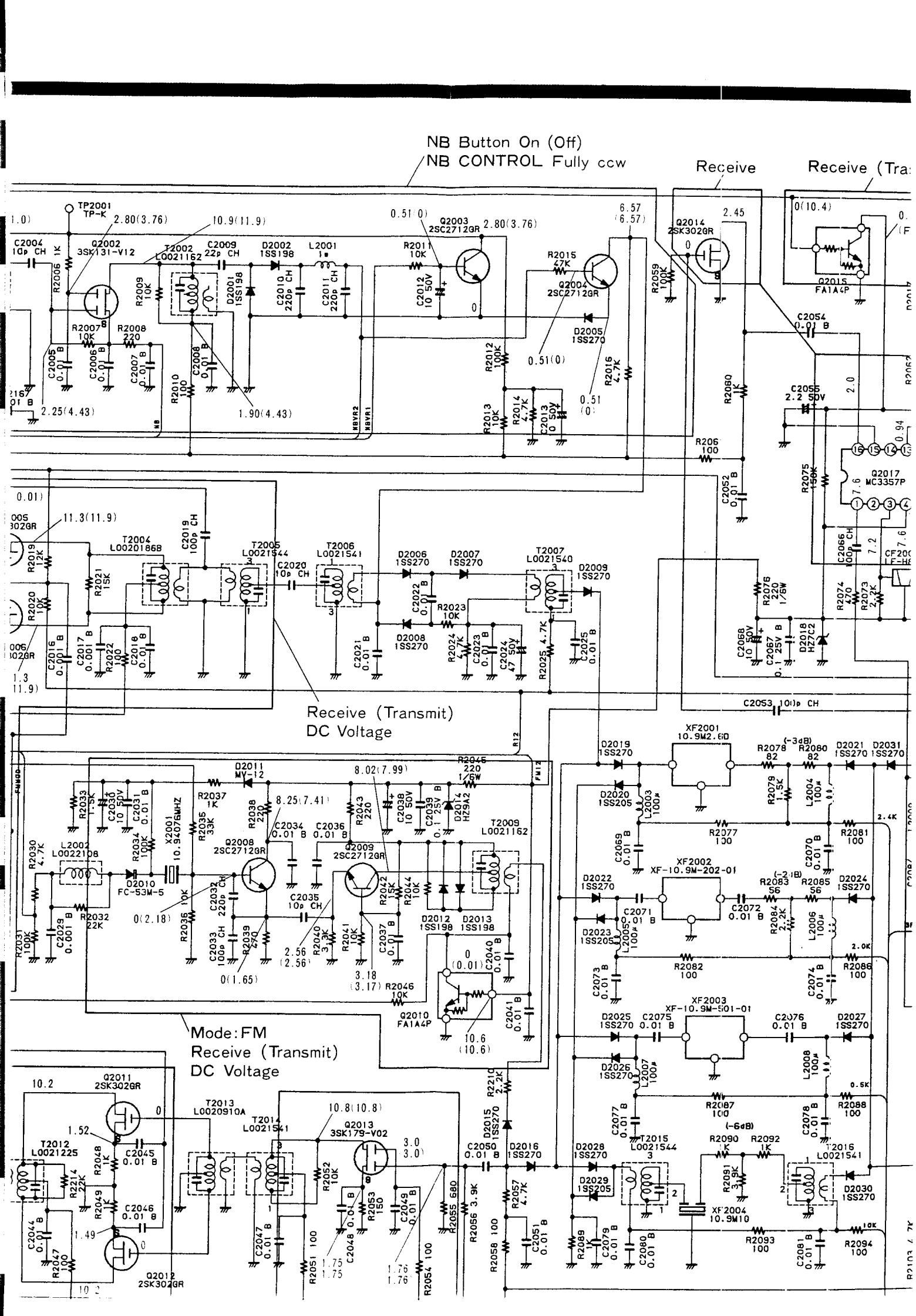
NB Button On (Off)
NB CONTROL Fully ccw
Receive
Receive (Transmit)
DC Voltage
Mode: FM
Receive (Transmit)
DC Voltage

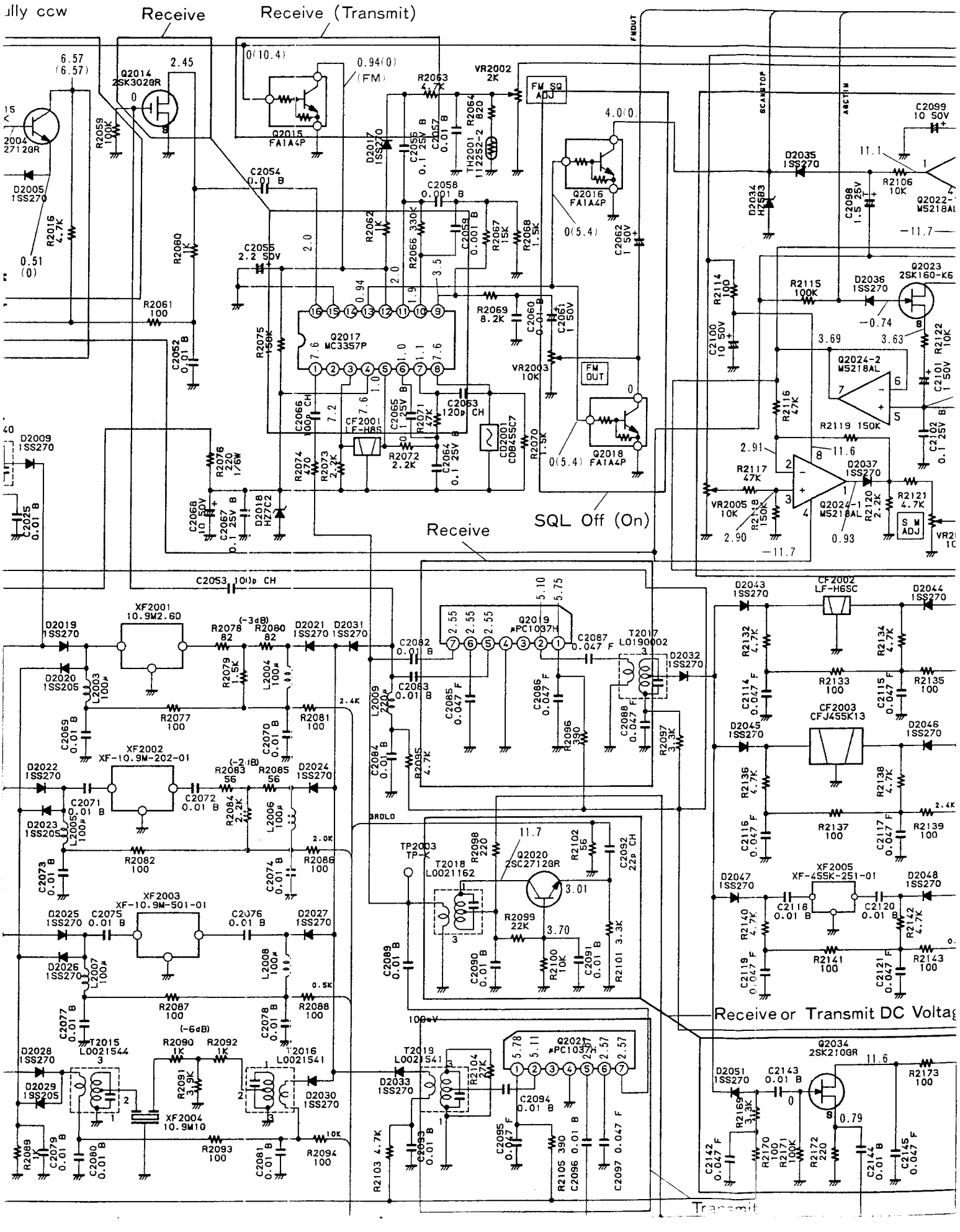

ully ccw
Receive
Receive (Transmit)
Q2014 2SK302GR
Q2015 FA1A4P
Q2016 FA1A4P
Q2017 MC3357P
Q2018 FA1A4P
Q2019 μPC1037H
Q2020 2SC2712GR
Q2021 μPC1037H
Q2022-1 M5218AL
Q2023 2SK160-K6
Q2024-1 M5218AL
Q2024-2 M5218AL
Q2034 2SK210GR
FM SQ ADJ
FM OUT
S M ADJ
SQL Off (On)
Receive
Receive or Transmit DC Voltag
Transmit
XF2001 10.9M2.6D
XF2002 XF-10.9M-202-01
XF2003 XF-10.9M-501-01
XF2004 10.9M10
XF2005 XF-455K-251-01
CF2001 LF-H8S
CF2002 LF-H6SC
CF2003 CFJ455K13
T2015 L0021544
T2016 L0021541
T2017 L0190002
T2018 L0021162
T2019 L0021541
TP2003 TP-K

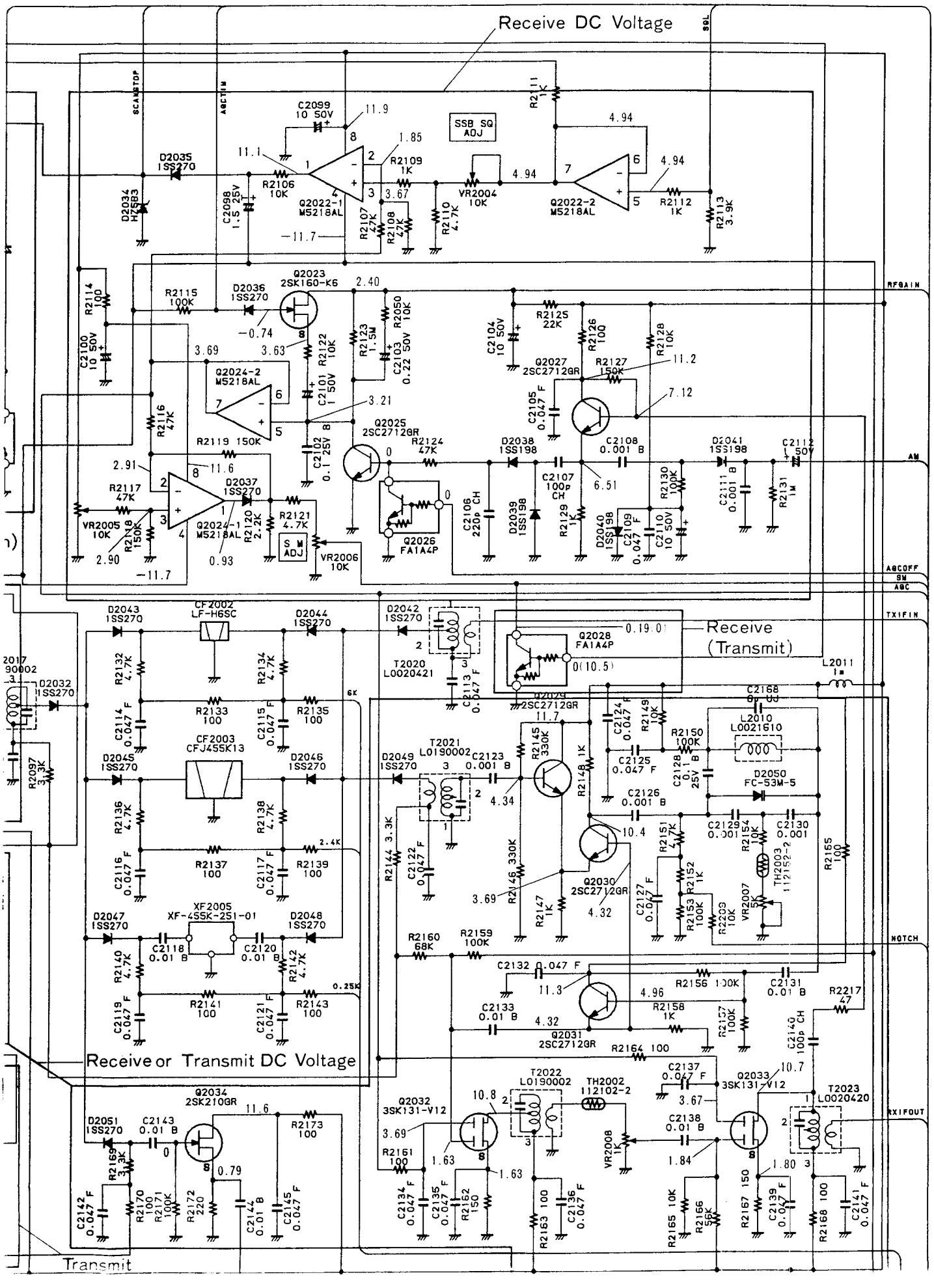
Receive DC Voltage
SSB SQ ADJ
S M ADJ
Q2022-1 M5218AL
Q2022-2 M5218AL
Q2023 2SK160-K6
Q2024-1 M5218AL
Q2024-2 M5218AL
Q2025 2SC2712GR
Q2026 FA1A4P
Q2027 2SC2712GR
Q2028 FA1A4P
Q2029 2SC2712GR
Q2030 2SC2712GR
Q2031 2SC2712GR
Q2032 3SK131-V12
Q2033 3SK131-V12
Q2034 2SK210GR
CF2002 LF-H6SC
CF2003 CFJ455K13
XF2005 XF-455K-251-01
T2020 L0020421
T2021 L0190002
T2022 L0190002
T2023 L0020420
TH2002 112102-2
TH2003 112152-2
D2050 FC-53M-5
Receive (Transmit)
Receive or Transmit DC Voltage
Transmit
SCANSTOP
AGCTIM
SQL
RFGAIN
AM
AGCOFF
SM
AGC
TXIFIN
NOTCH
RXIFOUT

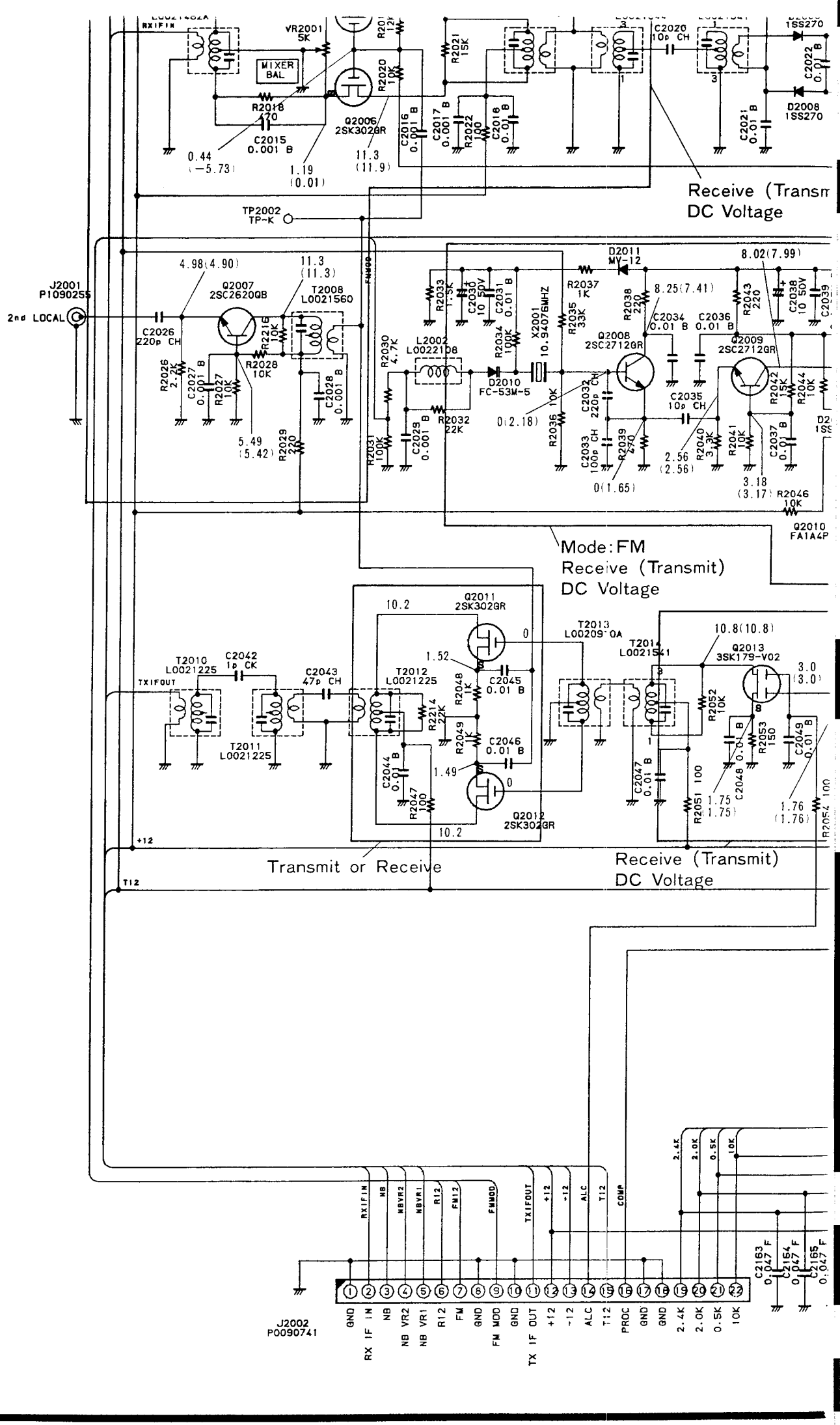
RXIFIN
VR2001 5K
MIXER BAL
R2018 470
C2015 0.001 B
R2020 10K
Q2006 2SK302GR
R2021 15K
C2020 10p CH
1SS270
C2022 0.01 B
D2008 1SS270
C2021 0.01 B
C2016 0.001 B
C2017 0.001 B
R2022 100
C2018 0.01 B
0.44 (−5.73)
1.19 (0.01)
11.3 (11.9)
Receive (Transm
DC Voltage
TP2002 TP-K
J2001 P1090255
2nd LOCAL
4.98(4.90)
11.3 (11.3)
Q2007 2SC2620QB
T2008 L0021560
C2026 220p CH
R2026 2.2K
C2027 0.001 B
R2027 10K
R2216 10K
R2028 10K
C2028 0.001 B
R2029 220
5.49 (5.42)
D2011 MV-12
8.02(7.99)
R2033 1.5K
C2030 10 50V
C2031 0.01 B
R2034 100K
X2001 10.9407MHZ
R2035 33K
R2037 1K
R2038 220
8.25(7.41)
C2034 0.01 B
C2036 0.01 B
R2043 220
C2038 10 50V
C2039
L2002 L0022108
R2030 4.7K
R2031 100K
C2029 0.001 B
R2032 22K
D2010 FC-53M-5
Q2008 2SC2712GR
Q2009 2SC2712GR
C2032 220p CH
C2033 100p CH
R2036 10K
R2039 470
0(2.18)
C2035 10p CH
R2040 3K
R2041 10K
C2037 0.01 B
2.56 (2.56)
0(1.65)
3.18 (3.17)
R2042 5K
R2044 10K
R2046 10K
Q2010 FA1A4P
Mode: FM
Receive (Transmit)
DC Voltage
10.2
Q2011 2SK302GR
T2010 L0021225
C2042 1p CK
C2043 47p CH
T2011 L0021225
T2012 L0021225
R2214 22K
R2048 1K
C2045 0.01 B
R2049 1K
C2046 0.01 B
C2044 0.01 B
R2047 100
1.52
1.49
Q2012 2SK302GR
T2013 L0020910A
T2014 L0021541
10.8(10.8)
Q2013 3SK179-V02
3.0 (3.0)
R2052 10K
R2053 150
C2049 0.01 B
C2047 0.01 B
C2048 0.01 B
R2051 100
1.75 (1.75)
1.76 (1.76)
R2054 100
TXIFOUT
+12
T12
Transmit or Receive
Receive (Transmit)
DC Voltage
J2002 P0090741
GND
RX IF IN
NB
NB VR2
NB VR1
R12
FM
GND
FM MOD
GND
TX IF OUT
+12
-12
ALC
T12
PROC
GND
GND
2.4K
2.0K
0.5K
10K
C2163 0.047 F
C2164 0.047 F
C2165 0.047 F

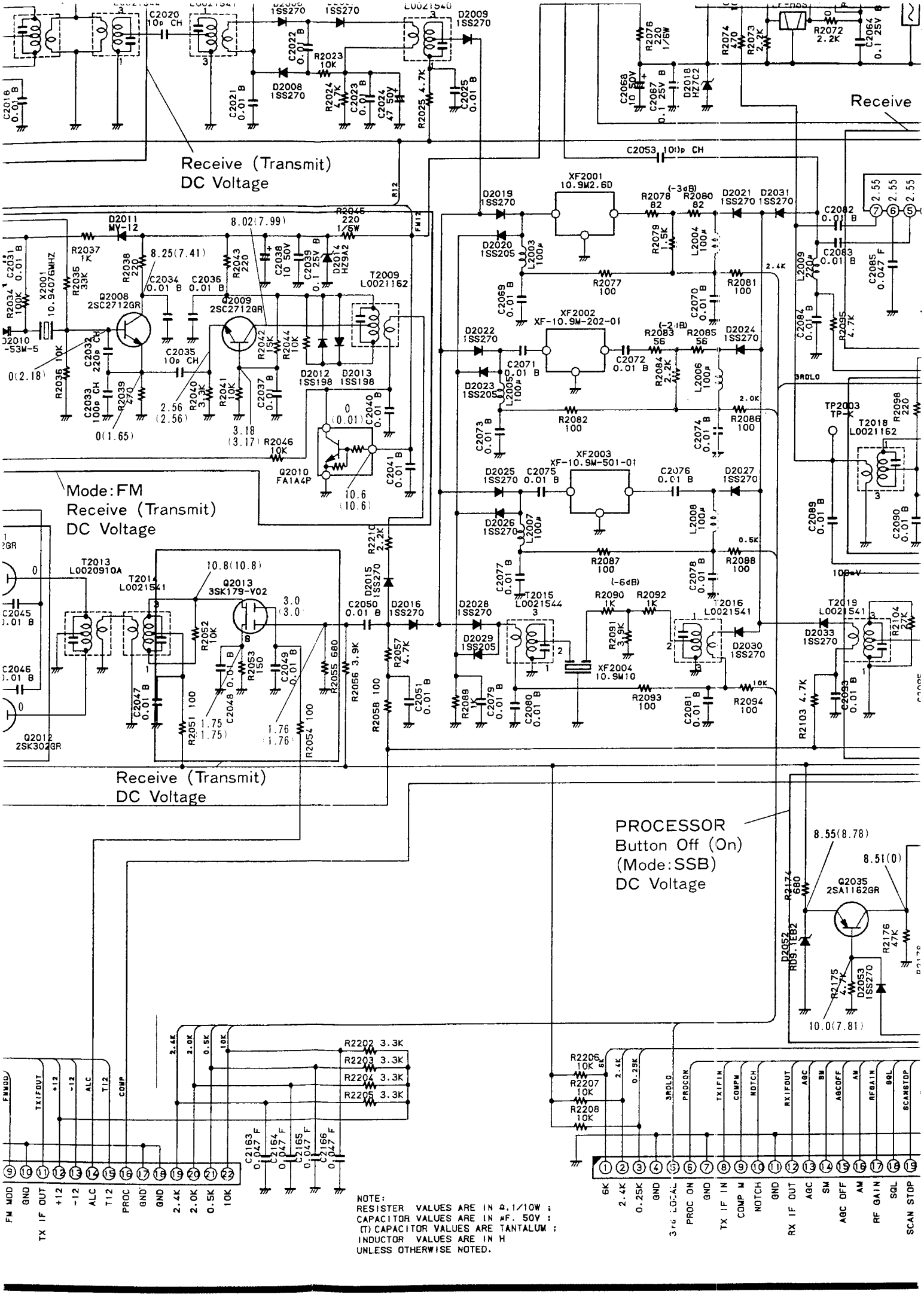
Receive (Transmit)
DC Voltage
Receive
Mode:FM
Receive (Transmit)
DC Voltage
Receive (Transmit)
DC Voltage
PROCESSOR
Button Off (On)
(Mode:SSB)
DC Voltage
NOTE:
RESISTER VALUES ARE IN Ω,1/10W ;
CAPACITOR VALUES ARE IN μF, 50V ;
(T) CAPACITOR VALUES ARE TANTALUM ;
INDUCTOR VALUES ARE IN H
UNLESS OTHERWISE NOTED.

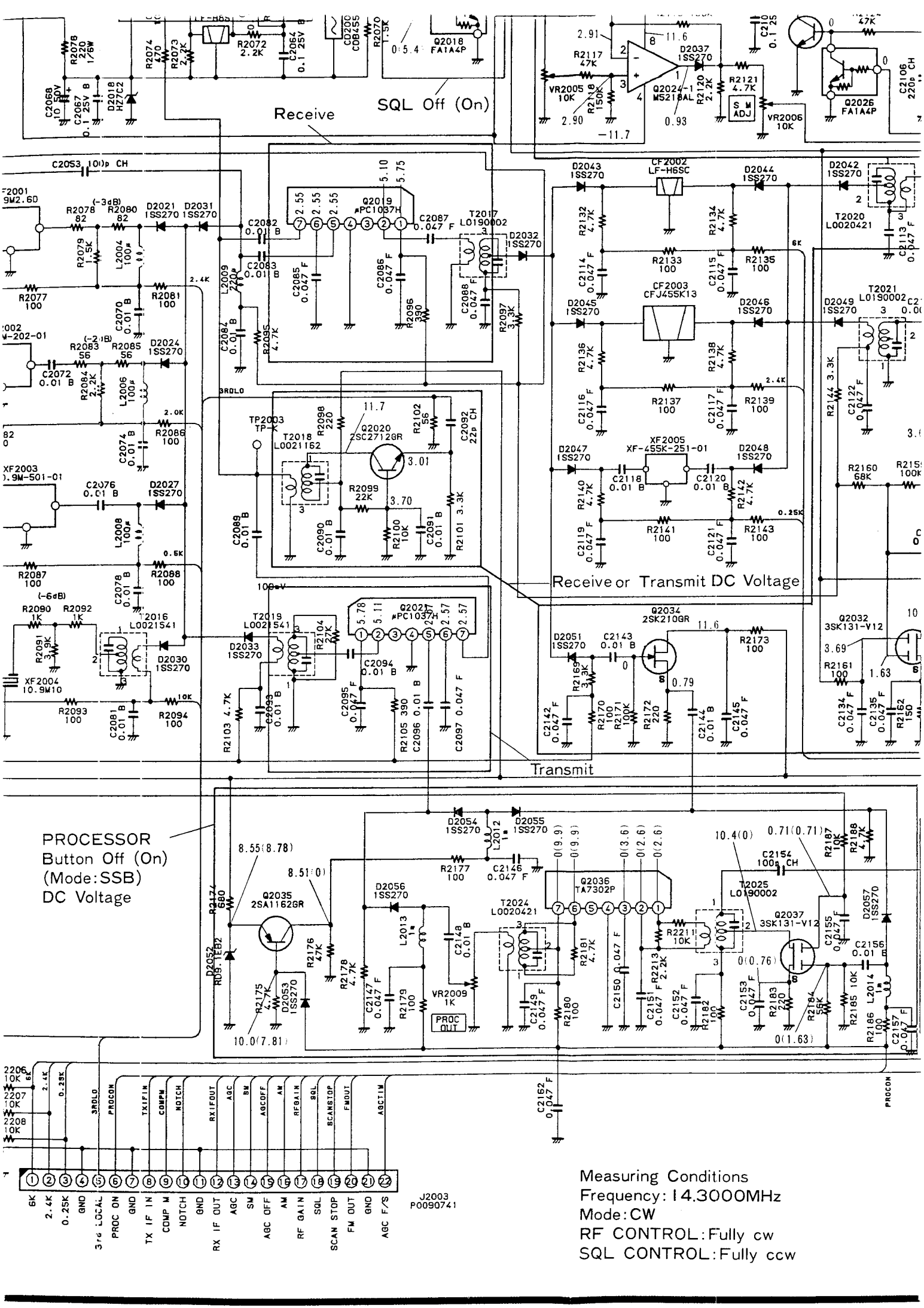
Receive
SQL Off (On)
Receive or Transmit DC Voltage
Transmit
PROCESSOR
Button Off (On)
(Mode:SSB)
DC Voltage
Measuring Conditions
Frequency: 14.3000MHz
Mode: CW
RF CONTROL: Fully cw
SQL CONTROL: Fully ccw
J2003
P0090741
6K
2.4K
0.25K
GND
3rd LOCAL
PROC ON
GND
TX IF IN
COMP M
NOTCH
GND
RX IF OUT
AGC
SM
AGC OFF
AM
RF GAIN
SQL
SCAN STOP
FM OUT
GND
AGC F/S

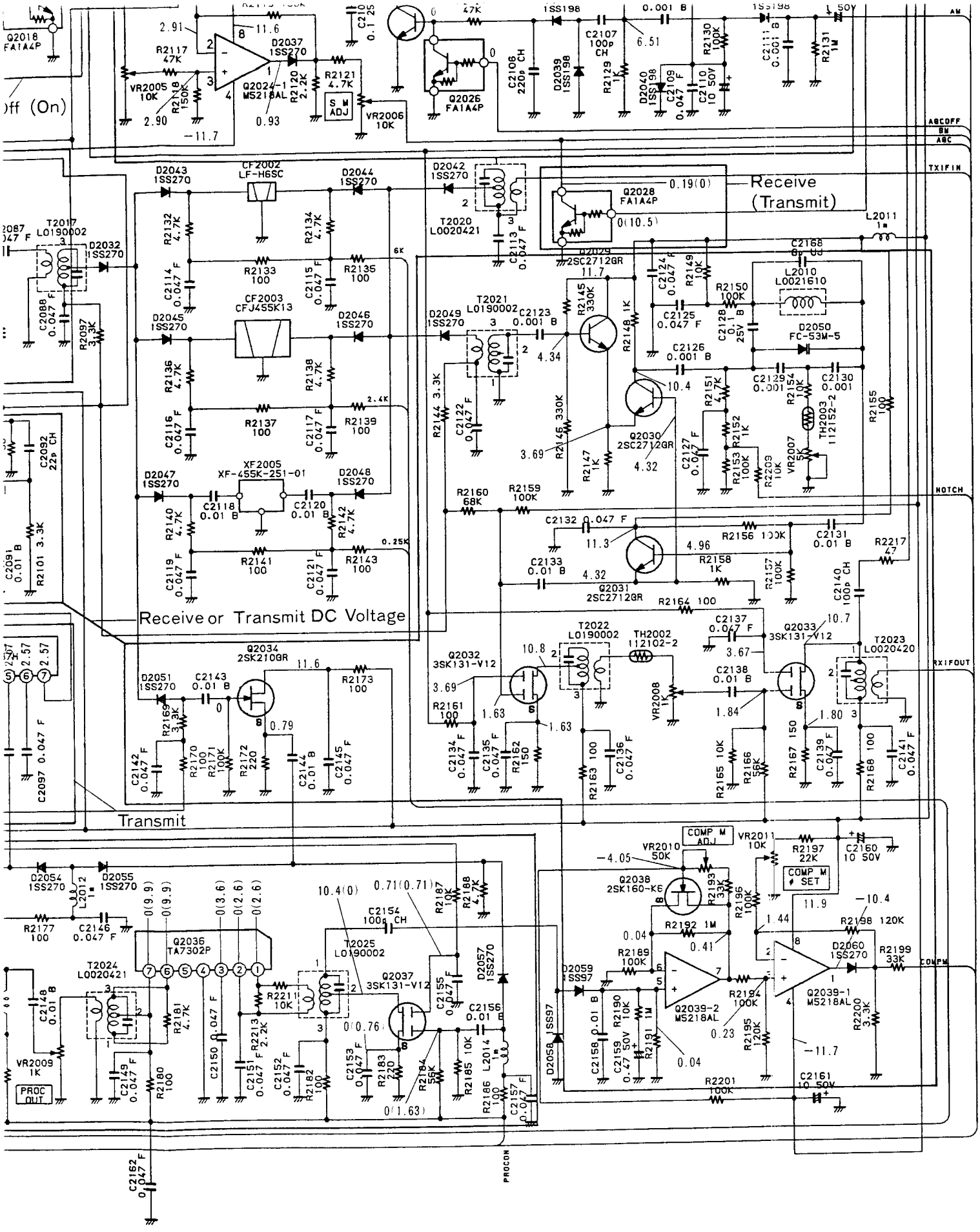

Measuring Conditions
Frequency: 14.3000MHz
Mode: CW
RF CONTROL: Fully cw
SQL CONTROL: Fully ccw

J2003
0090741

IF UNIT

REF.	YAESU P/N	DESCRIPTION	MFGR'S DESIG	VALUE	WV	TOL.	VERS.
		*** RF UNIT ***					
	CA0224005	P.C.B. W COMP.					DST EXP
	CA0224006	P.C.B. W COMP.					DST USA
	CA0224007	P.C.B. W COMP.					DST BEL
	CA0224008	P.C.B. W COMP.					DST FRA
	CA0224009	P.C.B. W COMP.					DST AUS
	F3176000A	P.C.B. W/O COMP.					
C 1001	K22170227	CHIP CAP.	GRM40CH470J50PT	47pF	50V	CH	
C 1002	K22170817	CHIP CAP.	GRM40B103M50PT	0.01uF	50V	B	
C 1003	K22170817	CHIP CAP.	GRM40B103M50PT	0.01uF	50V	B	
C 1004	K22170817	CHIP CAP.	GRM40B103M50PT	0.01uF	50V	B	
C 1005	K22170817	CHIP CAP.	GRM40B103M50PT	0.01uF	50V	B	
C 1006	K22171008	CHIP CAP.	GRM40F473Z50PT	0.047uF	50V	F	
C 1007	K22170817	CHIP CAP.	GRM40B103M50PT	0.01uF	50V	B	
C 1008	K22171008	CHIP CAP.	GRM40F473Z50PT	0.047uF	50V	F	
C 1009	K46170017	AL.ELECTRO.CAP.	50V010M5X11TR5	1uF	50V		
C 1010	K22170221	CHIP CAP.	GRM40CH270J50PT	27pF	50V	CH	
C 1011	K22170229	CHIP CAP.	GRM40CH560J50PT	56pF	50V	CH	
C 1012	K22170221	CHIP CAP.	GRM40CH270J50PT	27pF	50V	CH	
C 1013	K22170817	CHIP CAP.	GRM40B103M50PT	0.01uF	50V	B	
C 1014	K22170817	CHIP CAP.	GRM40B103M50PT	0.01uF	50V	B	
C 1015	K22170817	CHIP CAP.	GRM40B103M50PT	0.01uF	50V	B	
C 1016	K22170817	CHIP CAP.	GRM40B103M50PT	0.01uF	50V	B	
C 1017	K22170817	CHIP CAP.	GRM40B103M50PT	0.01uF	50V	B	
C 1018	K22170817	CHIP CAP.	GRM40B103M50PT	0.01uF	50V	B	
C 1019	K22170817	CHIP CAP.	GRM40B103M50PT	0.01uF	50V	B	
C 1020	K22170817	CHIP CAP.	GRM40B103M50PT	0.01uF	50V	B	
C 1021	K22170817	CHIP CAP.	GRM40B103M50PT	0.01uF	50V	B	
C 1022	K22170802	CHIP CAP.	GRM40B561M50PT	560pF	50V	B	
C 1023	K22170817	CHIP CAP.	GRM40B103M50PT	0.01uF	50V	B	
C 1024	K22170221	CHIP CAP.	GRM40CH270J50PT	27pF	50V	CH	
C 1025	K22170229	CHIP CAP.	GRM40CH560J50PT	56pF	50V	CH	
C 1026	K22170221	CHIP CAP.	GRM40CH270J50PT	27pF	50V	CH	
C 1027	K46170021	AL.ELECTRO.CAP.	50V100M5X11TR5	10uF	50V		
C 1028	K22170817	CHIP CAP.	GRM40B103M50PT	0.01uF	50V	B	
C 1029	K22172009	CHIP CAP.	GRM42-6F104Z50PT	0.1uF	50V	F	
C 1030	K22172009	CHIP CAP.	GRM42-6F104Z50PT	0.1uF	50V	F	
C 1031	K22172009	CHIP CAP.	GRM42-6F104Z50PT	0.1uF	50V	F	
C 1032	K22172009	CHIP CAP.	GRM42-6F104Z50PT	0.1uF	50V	F	
C 1033	K46170021	AL.ELECTRO.CAP.	50V100M5X11TR5	10uF	50V		
C 1034	K22171008	CHIP CAP.	GRM40F473Z50PT	0.047uF	50V	F	
C 1035	K46170021	AL.ELECTRO.CAP.	50V100M5X11TR5	10uF	50V		
C 1036	K22171008	CHIP CAP.	GRM40F473Z50PT	0.047uF	50V	F	
C 1037	K22171008	CHIP CAP.	GRM40F473Z50PT	0.047uF	50V	F	
C 1038	K46170021	AL.ELECTRO.CAP.	50V100M5X11TR5	10uF	50V		
C 1039	K22170805	CHIP CAP.	GRM40B102M50PT	0.001uF	50V	B	
C 1040	K22170811	CHIP CAP.	GRM40B332M50PT	0.0033uF	50V	B	
C 1041	K46170021	AL.ELECTRO.CAP.	50V100M5X11TR5	10uF	50V		
C 1042	K22171008	CHIP CAP.	GRM40F473Z50PT	0.047uF	50V	F	
C 1043	K22170817	CHIP CAP.	GRM40B103M50PT	0.01uF	50V	B	
C 1044	K22172009	CHIP CAP.	GRM42-6F104Z50PT	0.1uF	50V	F	
C 1045	K22170817	CHIP CAP.	GRM40B103M50PT	0.01uF	50V	B	

RF Unit

REF.	YAESU P/N	DESCRIPTION	MFGR'S DESIG	VALUE	WV	TOL.	VERS.
C 1046	K22170817	CHIP CAP.	GRM40B103M50PT	0.01uF	50V	B	
C 1047	K22172009	CHIP CAP.	GRM42-6F104Z50PT	0.1uF	50V	F	
C 1048	K46170021	AL. ELECTRO. CAP.	50V100M5X11TR5	10uF	50V		
C 1049	K22171008	CHIP CAP.	GRM40F473Z50PT	0.047uF	50V	F	
C 1050	K22170817	CHIP CAP.	GRM40B103M50PT	0.01uF	50V	B	
C 1051	K22172009	CHIP CAP.	GRM42-6F104Z50PT	0.1uF	50V	F	
C 1052	K22171008	CHIP CAP.	GRM40F473Z50PT	0.047uF	50V	F	
C 1053	K46170021	AL. ELECTRO. CAP.	50V100M5X11TR5	10uF	50V		
C 1054	K22170817	CHIP CAP.	GRM40B103M50PT	0.01uF	50V	B	
C 1055	K22170817	CHIP CAP.	GRM40B103M50PT	0.01uF	50V	B	
C 1056	K46170014	AL. ELECTRO. CAP.	50VR22M5X11TR5	0.22uF	50V		
C 1057	K22170817	CHIP CAP.	GRM40B103M50PT	0.01uF	50V	B	
C 1058	K22170235	CHIP CAP.	GRM40CH101J50PT	100pF	50V	CH	
C 1059	K22171008	CHIP CAP.	GRM40F473Z50PT	0.047uF	50V	F	
C 1060	K22170817	CHIP CAP.	GRM40B103M50PT	0.01uF	50V	B	
C 1061	K22170817	CHIP CAP.	GRM40B103M50PT	0.01uF	50V	B	
C 1062	K22170805	CHIP CAP.	GRM40B102M50PT	0.001uF	50V	B	
C 1063	K22170817	CHIP CAP.	GRM40B103M50PT	0.01uF	50V	B	
C 1064	K26170703	CERAMIC CAP.	UAU04X152K7L36VC	0.0015	50V	X	
C 1065	K26170706	CERAMIC CAP.	UAU05X272K7L36VC	0.0027	50V	X	
C 1066	K26170706	CERAMIC CAP.	UAU05X272K7L36VC	0.0027	50V	X	
C 1067	K26170703	CERAMIC CAP.	UAU04X152K7L36VC	0.0015	50V	X	
C 1068	K22171008	CHIP CAP.	GRM40F473Z50PT	0.047uF	50V	F	
C 1069	K46170021	AL. ELECTRO. CAP.	50V100M5X11TR5	10uF	50V		
C 1070	K26171044	CERAMIC CAP.	DD109-979SL431J50	430p	50V	SL	
C 1071	K22171008	CHIP CAP.	GRM40F473Z50PT	0.047uF	50V	F	
C 1072	K26170702	CERAMIC CAP.	UAU04X122K7L36VC	0.0012	50V	X	
C 1073	K26171029	CERAMIC CAP.	DD105-979SL101J50	100pF	50V	SL	
C 1074	K26170702	CERAMIC CAP.	UAU04X122K7L36VC	0.0012	50V	X	
C 1075	K26171044	CERAMIC CAP.	DD109-979SL431J50	430p	50V	SL	
C 1076	K22171008	CHIP CAP.	GRM40F473Z50PT	0.047uF	50V	F	
C 1077	K46170021	AL. ELECTRO. CAP.	50V100M5X11TR5	10uF	50V		
C 1078	K26171044	CERAMIC CAP.	DD109-979SL431J50	430p	50V	SL	
C 1079	K22171008	CHIP CAP.	GRM40F473Z50PT	0.047uF	50V	F	
C 1080	K26171035	CERAMIC CAP.	DD106-979SL181J50	180pF	50V	SL	
C 1081	K26171040	CERAMIC CAP.	DD107-979SL301J50	300p	50V	SL	
C 1082	K26171036	CERAMIC CAP.	DD106-979SL201J50	200p	50V	SL	
C 1083	K22171008	CHIP CAP.	GRM40F473Z50PT	0.047uF	50V	F	
C 1084	K26171046	CERAMIC CAP.	DD109-979SL511J50	510p	50V	SL	
C 1085	K46170021	AL. ELECTRO. CAP.	50V100M5X11TR5	10uF	50V		
C 1086	K26171039	CERAMIC CAP.	DD107-979SL271J50	270pF	50V	SL	
C 1087	K22171008	CHIP CAP.	GRM40F473Z50PT	0.047uF	50V	F	
C 1088	K26171029	CERAMIC CAP.	DD105-979SL101J50	100pF	50V	SL	
C 1089	K26171036	CERAMIC CAP.	DD106-979SL201J50	200p	50V	SL	
C 1090	K26171029	CERAMIC CAP.	DD105-979SL101J50	100pF	50V	SL	
C 1091	K22171008	CHIP CAP.	GRM40F473Z50PT	0.047uF	50V	F	
C 1092	K26171041	CERAMIC CAP.	DD107-979SL331J50	330pF	50V	SL	
C 1093	K46170021	AL. ELECTRO. CAP.	50V100M5X11TR5	10uF	50V		
C 1094	K26171031	CERAMIC CAP.	DD105-979SL121J50	120pF	50V	SL	
C 1095	K22170817	CHIP CAP.	GRM40B103M50PT	0.01uF	50V	B	
C 1096	K26171027	CERAMIC CAP.	DD104-979SL820J50	82pF	50V	SL	
C 1097	K26171043	CERAMIC CAP.	DD108-979SL391J50	390pF	50V	SL	
C 1098	K26171027	CERAMIC CAP.	DD104-979SL820J50	82pF	50V	SL	
C 1099	K22170817	CHIP CAP.	GRM40B103M50PT	0.01uF	50V	B	
C 1100	K26171034	CERAMIC CAP.	DD106-979SL161J50	160p	50V	SL	

REF.	YAESU P/N	DESCRIPTION	MFGR'S DESIG	VALUE	WV	TOL.	VERS.
C 1101	K46170021	AL. ELECTRO. CAP.	50V100M5X11TR5	10uF	50V		
C 1102	K26171037	CERAMIC CAP.	DD107-979SL221J50	220pF	50V	SL	
C 1103	K22170817	CHIP CAP.	GRM40B103M50PT	0.01uF	50V	B	
C 1104	K26171016	CERAMIC CAP.	DD104-979SL300J50	30p	50V	SL	
C 1105	K26171044	CERAMIC CAP.	DD109-979SL431J50	430p	50V	SL	
C 1106	K26171016	CERAMIC CAP.	DD104-979SL300J50	30p	50V	SL	
C 1107	K22170817	CHIP CAP.	GRM40B103M50PT	0.01uF	50V	B	
C 1108	K26171038	CERAMIC CAP.	DD107-979SL241J50	240p	50V	SL	
C 1109	K46170021	AL. ELECTRO. CAP.	50V100M5X11TR5	10uF	50V		
C 1110	K26171032	CERAMIC CAP.	DD105-979SL131J50	130p	50V	SL	
C 1111	K22170817	CHIP CAP.	GRM40B103M50PT	0.01uF	50V	B	
C 1112	K26171017	CERAMIC CAP.	DD104-979SL330J50	33pF	50V	SL	
C 1113	K26171042	CERAMIC CAP.	DD108-979SL361J50	360p	50V	SL	
C 1114	K26171017	CERAMIC CAP.	DD104-979SL330J50	33pF	50V	SL	
C 1115	K22170817	CHIP CAP.	GRM40B103M50PT	0.01uF	50V	B	
C 1116	K26171032	CERAMIC CAP.	DD105-979SL131J50	130p	50V	SL	
C 1117	K46170021	AL. ELECTRO. CAP.	50V100M5X11TR5	10uF	50V		
C 1118	K26171033	CERAMIC CAP.	DD106-979SL151J50	150pF	50V	SL	
C 1119	K22170817	CHIP CAP.	GRM40B103M50PT	0.01uF	50V	B	
C 1120	K26171012	CERAMIC CAP.	DD104-979SL200J50	20p	50V	SL	
C 1121	K26171041	CERAMIC CAP.	DD107-979SL331J50	330pF	50V	SL	
C 1122	K26171012	CERAMIC CAP.	DD104-979SL200J50	20p	50V	SL	
C 1123	K22170817	CHIP CAP.	GRM40B103M50PT	0.01uF	50V	B	
C 1124	K26171030	CERAMIC CAP.	DD105-979SL111J50	110p	50V	SL	
C 1125	K46170021	AL. ELECTRO. CAP.	50V100M5X11TR5	10uF	50V		
C 1126	K26171028	CERAMIC CAP.	DD105-979SL910J50	91p	50V	SL	
C 1127	K22170817	CHIP CAP.	GRM40B103M50PT	0.01uF	50V	B	
C 1128	K26171009	CERAMIC CAP.	DD104-979SL150J50	15pF	50V	SL	
C 1129	K26171039	CERAMIC CAP.	DD107-979SL271J50	270pF	50V	SL	
C 1130	K26171009	CERAMIC CAP.	DD104-979SL150J50	15pF	50V	SL	
C 1131	K22170817	CHIP CAP.	GRM40B103M50PT	0.01uF	50V	B	
C 1132	K26171029	CERAMIC CAP.	DD105-979SL101J50	100pF	50V	SL	
C 1133	K46170021	AL. ELECTRO. CAP.	50V100M5X11TR5	10uF	50V		
C 1134	K26171023	CERAMIC CAP.	DD104-979SL560J50	56pF	50V	SL	
C 1135	K22170817	CHIP CAP.	GRM40B103M50PT	0.01uF	50V	B	
C 1136	K26171011	CERAMIC CAP.	DD104-979SL180J50	18pF	50V	SL	
C 1137	K26171031	CERAMIC CAP.	DD105-979SL121J50	120pF	50V	SL	
C 1138	K26171011	CERAMIC CAP.	DD104-979SL180J50	18pF	50V	SL	
C 1139	K22170817	CHIP CAP.	GRM40B103M50PT	0.01uF	50V	B	
C 1140	K26171021	CERAMIC CAP.	DD104-979SL470J50	47pF	50V	SL	
C 1141	K46170021	AL. ELECTRO. CAP.	50V100M5X11TR5	10uF	50V		
C 1142	K26171017	CERAMIC CAP.	DD104-979SL330J50	33pF	50V	SL	
C 1143	K22170817	CHIP CAP.	GRM40B103M50PT	0.01uF	50V	B	
C 1144	K26171003	CERAMIC CAP.	DD104-979SL080D50	8pF	50V	SL	
C 1145	K26171029	CERAMIC CAP.	DD105-979SL101J50	100pF	50V	SL	
C 1146	K26171003	CERAMIC CAP.	DD104-979SL080D50	8pF	50V	SL	
C 1147	K22170817	CHIP CAP.	GRM40B103M50PT	0.01uF	50V	B	
C 1148	K26171019	CERAMIC CAP.	DD104-979SL390J50	39pF	50V	SL	
C 1149	K46170021	AL. ELECTRO. CAP.	50V100M5X11TR5	10uF	50V		
C 1150	K26171039	CERAMIC CAP.	DD107-979SL271J50	270pF	50V	SL	
C 1151	K26171039	CERAMIC CAP.	DD107-979SL271J50	270pF	50V	SL	
C 1152	K46170017	AL. ELECTRO. CAP.	50V010M5X11TR5	1uF	50V		
C 1153	K22171008	CHIP CAP.	GRM40F473Z50PT	0.047uF	50V	F	
C 1154	K46170021	AL. ELECTRO. CAP.	50V100M5X11TR5	10uF	50V		
C 1155	K46170013	AL. ELECTRO. CAP.	50VR10M5X11TR5	0.1uF	50V		

RF Unit

REF.	YAESU P/N	DESCRIPTION	MFGR'S DESIG	VALUE	WV	TOL.	VERS.
C 1156	K46170021	AL. ELECTRO. CAP.	50V100M5X11TR5	10uF	50V		
C 1157	K22170817	CHIP CAP.	GRM40B103M50PT	0.01uF	50V	B	
C 1158	K46170014	AL. ELECTRO. CAP.	50VR22M5X11TR5	0.22uF	50V		
C 1159	K22170817	CHIP CAP.	GRM40B103M50PT	0.01uF	50V	B	
C 1161	K46170021	AL. ELECTRO. CAP.	50V100M5X11TR5	10uF	50V		
C 1162	K22170805	CHIP CAP.	GRM40B102M50PT	0.001uF	50V	B	
C 1164	K46170014	AL. ELECTRO. CAP.	50VR22M5X11TR5	0.22uF	50V		
C 1165	K46170021	AL. ELECTRO. CAP.	50V100M5X11TR5	10uF	50V		
C 1167	K46170016	AL. ELECTRO. CAP.	50VR47M5X11TR5	0.47uF	50V		
C 1168	K22171008	CHIP CAP.	GRM40F473Z50PT	0.047uF	50V	F	
C 1169	K22171008	CHIP CAP.	GRM40F473Z50PT	0.047uF	50V	F	
C 1170	K46170017	AL. ELECTRO. CAP.	50V010M5X11TR5	1uF	50V		
C 1171	K46170017	AL. ELECTRO. CAP.	50V010M5X11TR5	1uF	50V		
C 1173	K22171008	CHIP CAP.	GRM40F473Z50PT	0.047uF	50V	F	
C 1174	K22171008	CHIP CAP.	GRM40F473Z50PT	0.047uF	50V	F	
C 1175	K22172009	CHIP CAP.	GRM42-6F104Z50PT	0.1uF	50V	F	
C 1176	K46170017	AL. ELECTRO. CAP.	50V010M5X11TR5	1uF	50V		
C 1177	K22171008	CHIP CAP.	GRM40F473Z50PT	0.047uF	50V	F	
C 1178	K46170021	AL. ELECTRO. CAP.	50V100M5X11TR5	10uF	50V		
C 1179	K22170817	CHIP CAP.	GRM40B103M50PT	0.01uF	50V	B	
C 1180	K22172009	CHIP CAP.	GRM42-6F104Z50PT	0.1uF	50V	F	
C 1181	K22170817	CHIP CAP.	GRM40B103M50PT	0.01uF	50V	B	
C 1182	K26171025	CERAMIC CAP.	DD104-979SL680J50	68pF	50V	SL	
C 1183	K26171013	CERAMIC CAP.	DD104-979SL220J50	22pF	50V	SL	
C 1184	K26171033	CERAMIC CAP.	DD106-979SL151J50	150pF	50V	SL	
C 1185	K26171001	CERAMIC CAP.	DD104-979SL060D50	6pF	50V	SL	
C 1186	K26171025	CERAMIC CAP.	DD104-979SL680J50	68pF	50V	SL	
C 1187	K26170657	CERAMIC CAP.	DD106-979F103Z50	0.01uF	50V	F	
C 1188	K26170727	CERAMIC CAP.	DD308-979F104Z50	0.1uF	50V	F	
C 1190	K46170021	AL. ELECTRO. CAP.	50V100M5X11TR5	10uF	50V		
C 1191	K46170021	AL. ELECTRO. CAP.	50V100M5X11TR5	10uF	50V		
C 1194	K22171008	CHIP CAP.	GRM40F473Z50PT	0.047uF	50V	F	
C 1195	K26171048	CERAMIC CAP.	DD110-979SL621J50	620p	50V	SL	
C 1196	K26171048	CERAMIC CAP.	DD110-979SL621J50	620p	50V	SL	
C 1197	K26171045	CERAMIC CAP.	DD109-979SL471J50	470pF	50V	SL	
C 1199	K26170098	CERAMIC CAP.	DD104-979SL030C50	3pF	50V	SL	
C 1200	K26171013	CERAMIC CAP.	DD104-979SL220J50	22pF	50V	SL	
C 1201	K26170100	CERAMIC CAP.	DD104-979SL050C50	5pF	50V	SL	
C 1203	K46170017	AL. ELECTRO. CAP.	50V010M5X11TR5	1uF	50V		
C 1204	K22170817	CHIP CAP.	GRM40B103M50PT	0.01uF	50V	B	
C 1207	K22170219	CHIP CAP.	GRM40CH220J50PT	22pF	50V	CH	
C 1208	K22170817	CHIP CAP.	GRM40B103M50PT	0.01uF	50V	B	
C 1209	K22170817	CHIP CAP.	GRM40B103M50PT	0.01uF	50V	B	
C 1210	K22172009	CHIP CAP.	GRM42-6F104Z50PT	0.1uF	50V	F	
C 1211	K22171008	CHIP CAP.	GRM40F473Z50PT	0.047uF	50V	F	
C 1212	K22170213	CHIP CAP.	GRM40CH120J50PT	12pF	50V	CH	
C 1213	K22170817	CHIP CAP.	GRM40B103M50PT	0.01uF	50V	B	
C 1214	K46170016	AL. ELECTRO. CAP.	50VR47M5X11TR5	0.47uF	50V		
C 1215	K22170805	CHIP CAP.	GRM40B102M50PT	0.001uF	50V	B	
C 1216	K22170805	CHIP CAP.	GRM40B102M50PT	0.001uF	50V	B	
C 1217	K22171008	CHIP CAP.	GRM40F473Z50PT	0.047uF	50V	F	
D 1001	G2060004	DIODE	1SS270TJ				
D 1002	G2060004	DIODE	1SS270TJ				
D 1003	G2060004	DIODE	1SS270TJ				

REF.	YAESU P/N	DESCRIPTION	MFGR'S DESIG	VALUE	WV	TOL.	VERS.
D 1004	G2060004	DIODE	1SS270TJ				
D 1005	G2060004	DIODE	1SS270TJ				
D 1006	G2060004	DIODE	1SS270TJ				
D 1007	G2060004	DIODE	1SS270TJ				
D 1008	G2060004	DIODE	1SS270TJ				
D 1009	G2060004	DIODE	1SS270TJ				
D 1012	G2090200	DIODE	1SV80				
D 1013	G2090200	DIODE	1SV80				
D 1014	G2090200	DIODE	1SV80				
D 1015	G2050007	DIODE	1SS83RE				
D 1016	G2050007	DIODE	1SS83RE				
D 1018	G2060004	DIODE	1SS270TJ				
D 1019	G2050007	DIODE	1SS83RE				
D 1020	G2050007	DIODE	1SS83RE				
D 1021	G2050007	DIODE	1SS83RE				
D 1022	G2050007	DIODE	1SS83RE				
D 1023	G2050007	DIODE	1SS83RE				
D 1024	G2050007	DIODE	1SS83RE				
D 1025	G2050007	DIODE	1SS83RE				
D 1026	G2050007	DIODE	1SS83RE				
D 1027	G2050007	DIODE	1SS83RE				
D 1028	G2050007	DIODE	1SS83RE				
D 1029	G2050007	DIODE	1SS83RE				
D 1030	G2050007	DIODE	1SS83RE				
D 1031	G2050007	DIODE	1SS83RE				
D 1032	G2050007	DIODE	1SS83RE				
D 1033	G2050007	DIODE	1SS83RE				
D 1034	G2050007	DIODE	1SS83RE				
D 1035	G2050007	DIODE	1SS83RE				
D 1036	G2050007	DIODE	1SS83RE				
D 1037	G2050007	DIODE	1SS83RE				
D 1038	G2050007	DIODE	1SS83RE				
D 1039	G2050007	DIODE	1SS83RE				
D 1040	G2050007	DIODE	1SS83RE				
D 1041	G2050007	DIODE	1SS83RE				
D 1042	G2050007	DIODE	1SS83RE				
D 1043	G2050007	DIODE	1SS83RE				
D 1044	G2050007	DIODE	1SS83RE				
D 1045	G2050007	DIODE	1SS83RE				
D 1046	G2060004	DIODE	1SS270TJ				
D 1049	G2090199	DIODE	RD12EB2				
D 1050	G2060006	DIODE	RD4.7EB2-T1				
D 1051	G2060004	DIODE	1SS270TJ				
D 1052	G2060004	DIODE	1SS270TJ				
D 1053	G2090199	DIODE	RD12EB2				
D 1055	G2060004	DIODE	1SS270TJ				
D 1056	G2050007	DIODE	1SS83RE				
D 1057	G2090132	DIODE	1SS55				
D 1058	G2060004	DIODE	1SS270TJ				
D 1060	G2090015	DIODE	RD6.2EB3				
D 1061	G2090135	DIODE	ND487C2-3R				
D 1062	G2060004	DIODE	1SS270TJ				
D 1063	G2090132	DIODE	1SS55				
D 1064	G2090118	DIODE	1SS97				
D 1065	G2060004	DIODE	1SS270TJ				

REF.	YAESU P/N	DESCRIPTION	MFGR'S DESIG	VALUE	WV	TOL.	VERS.
D 1066	G2060004	DIODE	1SS270TJ				
D 1067	G2090181	DIODE	HZ7B1L				
J 1001	P1090255	CONNECTOR	TMP-J01X-A2				
J 1002	P0090741	CONNECTOR	EC1C-22P-2.5DSA				
J 1003	P0090741	CONNECTOR	EC1C-22P-2.5DSA				
J 1004	P1090255	CONNECTOR	TMP-J01X-A2				
J 1005	P1090255	CONNECTOR	TMP-J01X-A2				
L 1001	L1790119	M.RFC	LAL03TA102K	1mH			
L 1002	L0021409	COIL	0.117U T25-12				
L 1003	L0021409	COIL	0.117U T25-12				
L 1004	L1790058	M.RFC	LAP02TA100K	10uH			
L 1005	L1790054	M.RFC	LAP02TA4R7K	4.7uH			
L 1006	L1790046	M.RFC	LAP02TA1R0K	1uH			
L 1007	L1790119	M.RFC	LAL03TA102K	1mH			
L 1009	L1790046	M.RFC	LAP02TA1R0K	1uH			
L 1010	L1790058	M.RFC	LAP02TA100K	10uH			
L 1011	L1790054	M.RFC	LAP02TA4R7K	4.7uH			
L 1012	L0021409	COIL	0.117U T25-12				
L 1013	L0021409	COIL	0.117U T25-12				
L 1014	L1790055	M.RFC	LAP02TA5R6K	5.6uH			
L 1015	L1790055	M.RFC	LAP02TA5R6K	5.6uH			
L 1016	L1790119	M.RFC	LAL03TA102K	1mH			
L 1017	L1790119	M.RFC	LAL03TA102K	1mH			
L 1018	L1790119	M.RFC	LAL03TA102K	1mH			
L 1019	L1790119	M.RFC	LAL03TA102K	1mH			
L 1020	L1790069	M.RFC	LAP02TA820K	82uH			
L 1021	L1790070	M.RFC	LAP02TA101K	100uH			
L 1022	L1790069	M.RFC	LAP02TA820K	82uH			
L 1023	L1790119	M.RFC	LAL03TA102K	1mH			
L 1024	L1790068	M.RFC	LAP02TA680K	68uH			
L 1025	L1790063	M.RFC	LAP02TA270K	27uH			
L 1026	L1790065	M.RFC	LAP02TA390K	39uH			
L 1027	L1790063	M.RFC	LAP02TA270K	27uH			
L 1028	L1790068	M.RFC	LAP02TA680K	68uH			
L 1029	L1790119	M.RFC	LAL03TA102K	1mH			
L 1030	L1790058	M.RFC	LAP02TA100K	10uH			
L 1031	L1790063	M.RFC	LAP02TA270K	27uH			
L 1032	L1790055	M.RFC	LAP02TA5R6K	5.6uH			
L 1033	L1790063	M.RFC	LAP02TA270K	27uH			
L 1034	L1790058	M.RFC	LAP02TA100K	10uH			
L 1035	L1790056	M.RFC	LAP02TA6R8K	6.8uH			
L 1036	L1790062	M.RFC	LAP02TA220K	22uH			
L 1037	L1790052	M.RFC	LAP02TA3R3K	3.3uH			
L 1038	L1790062	M.RFC	LAP02TA220K	22uH			
L 1039	L1790056	M.RFC	LAP02TA6R8K	6.8uH			
L 1040	L1790055	M.RFC	LAP02TA5R6K	5.6uH			
L 1041	L1790059	M.RFC	LAP02TA120K	12uH			
L 1042	L1790051	M.RFC	LAP02TA2R7K	2.7u			
L 1043	L1790059	M.RFC	LAP02TA120K	12uH			
L 1044	L1790055	M.RFC	LAP02TA5R6K	5.6uH			
L 1045	L1790049	M.RFC	LAP02TA1R8K	1.8u			
L 1046	L1790060	M.RFC	LAP02TA150K	15uH			
L 1047	L1790047	M.RFC	LAP02TA1R2K	1.2u			

REF.	YAESU P/N	DESCRIPTION	MFGR'S DESIG	VALUE	WV	TOL.	VERS.
L 1048	L1790060	M.RFC	LAP02TA150K	15uH			
L 1049	L1790049	M.RFC	LAP02TA1R8K	1.8u			
L 1050	L1790049	M.RFC	LAP02TA1R8K	1.8u			
L 1051	L1790058	M.RFC	LAP02TA100K	10uH			
L 1052	L1790046	M.RFC	LAP02TA1R0K	1uH			
L 1053	L1790058	M.RFC	LAP02TA100K	10uH			
L 1054	L1790049	M.RFC	LAP02TA1R8K	1.8u			
L 1055	L1790047	M.RFC	LAP02TA1R2K	1.2u			
L 1056	L1790058	M.RFC	LAP02TA100K	10uH			
L 1057	L1790044	M.RFC	LAP02TAR68K	0.68uH			
L 1058	L1790058	M.RFC	LAP02TA100K	10uH			
L 1059	L1790047	M.RFC	LAP02TA1R2K	1.2u			
L 1060	L1790046	M.RFC	LAP02TA1R0K	1uH			
L 1061	L1790057	M.RFC	LAP02TA8R2K	8.2uH			
L 1062	L1790043	M.RFC	LAP02TAR56K	0.56uH			
L 1063	L1790057	M.RFC	LAP02TA8R2K	8.2uH			
L 1064	L1790046	M.RFC	LAP02TA1R0K	1uH			
L 1065	L1790046	M.RFC	LAP02TA1R0K	1uH			
L 1066	L1790053	M.RFC	LAP02TA3R9K	3.9uH			
L 1067	L1790043	M.RFC	LAP02TAR56K	0.56uH			
L 1068	L1790053	M.RFC	LAP02TA3R9K	3.9uH			
L 1069	L1790046	M.RFC	LAP02TA1R0K	1uH			
L 1070	L1790043	M.RFC	LAP02TAR56K	0.56uH			
L 1071	L1790052	M.RFC	LAP02TA3R3K	3.3uH			
L 1072	L1790041	M.RFC	LAP02TAR39K	0.39uH			
L 1073	L1790052	M.RFC	LAP02TA3R3K	3.3uH			
L 1074	L1790043	M.RFC	LAP02TAR56K	0.56uH			
L 1075	L1790060	M.RFC	LAP02TA150K	15uH			
L 1077	L1790064	M.RFC	LAP02TA330K	33uH			
L 1078	L1790064	M.RFC	LAP02TA330K	33uH			
L 1080	L1790055	M.RFC	LAP02TA5R6K	5.6uH			
L 1081	L1790067	M.RFC	LAP02TA560K	56uH			
L 1082	L1790070	M.RFC	LAP02TA101K	100uH			
L 1084	L1790119	M.RFC	LAL03TA102K	1mH			
L 1085	L0021222	COIL	0.240U T25-6				
L 1086	L0020927	COIL	0.280U T25-6				
L 1087	L1190227	M.RFC	LAL03NA561K	560uH			
L 1089	L0021821A	COIL	6.5T3.5D0.6UEW R				
L 1090	L1790119	M.RFC	LAL03TA102K	1mH			
L 1091	L1790038	M.RFC	LAP02TAR22K	0.22uH			
Q 1001	G1090088	IC	MC14028BCP				
Q 1002	G4801317B	FET	3SK131-T2B V12				
Q 1003	G3326207B	TRANSISTOR	2SC2620QBTR				
Q 1004	G3320530	TRANSISTOR	2SC2053				
Q 1005	G3305354B	TRANSISTOR	2SC535BTZ				
Q 1006	G3320530	TRANSISTOR	2SC2053				
Q 1007	G3801250	FET	2SK125				
Q 1008	G3801250	FET	2SK125				
Q 1009	G3801250	FET	2SK125				
Q 1010	G3801250	FET	2SK125				
Q 1011	G3327127G	TRANSISTOR	2SC2712GR TE85R				
Q 1012	G1091140	IC	M5218AL				
Q 1013	G4801797L	FET	3SK179-T2 V02				
Q 1014	G1091140	IC	M5218AL				

REF.	YAESU P/N	DESCRIPTION	MFGR'S DESIG	VALUE	WV	TOL.	VERS.
Q 1015	G3070006	TRANSISTOR	FA1A4P-T2B				
Q 1016	G3070006	TRANSISTOR	FA1A4P-T2B				
Q 1017	G3327127G	TRANSISTOR	2SC2712GR TE85R				
Q 1018	G1091140	IC	M5218AL				
Q 1019	G1091140	IC	M5218AL				
Q 1020	G3070006	TRANSISTOR	FA1A4P-T2B				
Q 1021	G1091140	IC	M5218AL				
Q 1022	G3324071	TRANSISTOR	2SC2407(A)				
Q 1023	G1090395	IC	SN74LS145N				
Q 1024	G3304580B	TRANSISTOR	2SC458B				
Q 1025	G1090895	IC	TC4S81F TE85R				
Q 1026	G3801250	FET	2SK125				
Q 1027	G3801250	FET	2SK125				
Q 1028	G3327127G	TRANSISTOR	2SC2712GR TE85R				
Q 1029	G3305354B	TRANSISTOR	2SC535BTZ				
R 1001	J24205473	CHIP RES.	RMC1/10T 473J	47K	1/10W		
R 1002	J24205123	CHIP RES.	RMC1/10T 123J	12K	1/10W		
R 1003	J24205473	CHIP RES.	RMC1/10T 473J	47K	1/10W		
R 1004	J24205103	CHIP RES.	RMC1/10T 103J	10K	1/10W		
R 1005	J24205221	CHIP RES.	RMC1/10T 221J	220	1/10W		
R 1006	J24205103	CHIP RES.	RMC1/10T 103J	10K	1/10W		
R 1007	J24205101	CHIP RES.	RMC1/10T 101J	100	1/10W		
R 1008	J24205150	CHIP RES.	RMC1/10T 150J	15	1/10W		
R 1009	J24205680	CHIP RES.	RMC1/10T 680J	68	1/10W		
R 1010	J24205150	CHIP RES.	RMC1/10T 150J	15	1/10W		
R 1011	J24205221	CHIP RES.	RMC1/10T 221J	220	1/10W		
R 1012	J24205223	CHIP RES.	RMC1/10T 223J	22K	1/10W		
R 1014	J24205829	CHIP RES.	RMC1/10T 8R2J	8.2	1/10W		
R 1015	J24205151	CHIP RES.	RMC1/10T 151J	150	1/10W		
R 1016	J24205829	CHIP RES.	RMC1/10T 8R2J	8.2	1/10W		
R 1017	J24205479	CHIP RES.	RMC1/10T 4R7J	4.7	1/10W		
R 1018	J05245560	CARBON FILM RES.	RD14TPR560J	56	1/4W		
R 1019	J24205102	CHIP RES.	RMC1/10T 102J	1K	1/10W		
R 1020	J24205331	CHIP RES.	RMC1/10T 331J	330	1/10W		
R 1021	J24205101	CHIP RES.	RMC1/10T 101J	100	1/10W		
R 1022	J24205221	CHIP RES.	RMC1/10T 221J	220	1/10W		
R 1023	J24205221	CHIP RES.	RMC1/10T 221J	220	1/10W		
R 1024	J24205101	CHIP RES.	RMC1/10T 101J	100	1/10W		
R 1025	J24205102	CHIP RES.	RMC1/10T 102J	1K	1/10W		
R 1026	J24205331	CHIP RES.	RMC1/10T 331J	330	1/10W		
R 1027	J24205229	CHIP RES.	RMC1/10T 2R2J	2.2	1/10W		
R 1028	J05245560	CARBON FILM RES.	RD14TPR560J	56	1/4W		
R 1029	J24205829	CHIP RES.	RMC1/10T 8R2J	8.2	1/10W		
R 1030	J24205151	CHIP RES.	RMC1/10T 151J	150	1/10W		
R 1031	J24205829	CHIP RES.	RMC1/10T 8R2J	8.2	1/10W		
R 1032	J24205103	CHIP RES.	RMC1/10T 103J	10K	1/10W		
R 1033	J24205104	CHIP RES.	RMC1/10T 104J	100K	1/10W		
R 1034	J24205681	CHIP RES.	RMC1/10T 681J	680	1/10W		
R 1035	J24205681	CHIP RES.	RMC1/10T 681J	680	1/10W		
R 1036	J24205220	CHIP RES.	RMC1/10T 220J	22	1/10W		
R 1037	J24205220	CHIP RES.	RMC1/10T 220J	22	1/10W		
R 1038	J24205471	CHIP RES.	RMC1/10T 471J	470	1/10W		
R 1039	J24205561	CHIP RES.	RMC1/10T 561J	560	1/10W		
R 1040	J24205101	CHIP RES.	RMC1/10T 101J	100	1/10W		

REF.	YAESU P/N	DESCRIPTION	MFGR'S DESIG	VALUE	WV	TOL.	VERS.
R 1041	J24205560	CHIP RES.	RMC1/10T 560J	56	1/10W		
R 1042	J05245331	CARBON FILM RES.	RD14TPR331J	330	1/4W		
R 1043	J24205101	CHIP RES.	RMC1/10T 101J	100	1/10W		
R 1044	J24205563	CHIP RES.	RMC1/10T 563J	56K	1/10W		
R 1045	J24205332	CHIP RES.	RMC1/10T 332J	3.3K	1/10W		
R 1046	J24205123	CHIP RES.	RMC1/10T 123J	12K	1/10W		
R 1047	J24205105	CHIP RES.	RMC1/10T 105J	1M	1/10W		
R 1048	J24205184	CHIP RES.	RMC1/10T 184J	180K	1/10W		
R 1049	J24205105	CHIP RES.	RMC1/10T 105J	1M	1/10W		
R 1050	J24205184	CHIP RES.	RMC1/10T 184J	180K	1/10W		
R 1051	J24205153	CHIP RES.	RMC1/10T 153J	15K	1/10W		
R 1052	J24205104	CHIP RES.	RMC1/10T 104J	100K	1/10W		
R 1053	J24205473	CHIP RES.	RMC1/10T 473J	47K	1/10W		
R 1054	J24205683	CHIP RES.	RMC1/10T 683J	68K	1/10W		
R 1055	J24205124	CHIP RES.	RMC1/10T 124J	120K	1/10W		
R 1056	J24205474	CHIP RES.	RMC1/10T 474J	470K	1/10W		
R 1057	J24205471	CHIP RES.	RMC1/10T 471J	470	1/10W		
R 1058	J24205333	CHIP RES.	RMC1/10T 333J	33K	1/10W		
R 1059	J24205101	CHIP RES.	RMC1/10T 101J	100	1/10W		
R 1060	J24205330	CHIP RES.	RMC1/10T 330J	33	1/10W		
R 1061	J24205101	CHIP RES.	RMC1/10T 101J	100	1/10W		
R 1062	J24205271	CHIP RES.	RMC1/10T 271J	270	1/10W		
R 1063	J24205391	CHIP RES.	RMC1/10T 391J	390	1/10W		
R 1064	J24205271	CHIP RES.	RMC1/10T 271J	270	1/10W		
R 1065	J24205330	CHIP RES.	RMC1/10T 330J	33	1/10W		
R 1066	J24205101	CHIP RES.	RMC1/10T 101J	100	1/10W		
R 1067	J24205330	CHIP RES.	RMC1/10T 330J	33	1/10W		
R 1068	J24205101	CHIP RES.	RMC1/10T 101J	100	1/10W		
R 1069	J24205330	CHIP RES.	RMC1/10T 330J	33	1/10W		
R 1070	J24205101	CHIP RES.	RMC1/10T 101J	100	1/10W		
R 1071	J24205330	CHIP RES.	RMC1/10T 330J	33	1/10W		
R 1072	J24205101	CHIP RES.	RMC1/10T 101J	100	1/10W		
R 1073	J24205330	CHIP RES.	RMC1/10T 330J	33	1/10W		
R 1074	J24205101	CHIP RES.	RMC1/10T 101J	100	1/10W		
R 1075	J24205330	CHIP RES.	RMC1/10T 330J	33	1/10W		
R 1076	J24205101	CHIP RES.	RMC1/10T 101J	100	1/10W		
R 1077	J24205330	CHIP RES.	RMC1/10T 330J	33	1/10W		
R 1078	J24205101	CHIP RES.	RMC1/10T 101J	100	1/10W		
R 1079	J24205330	CHIP RES.	RMC1/10T 330J	33	1/10W		
R 1080	J24205101	CHIP RES.	RMC1/10T 101J	100	1/10W		
R 1081	J24205330	CHIP RES.	RMC1/10T 330J	33	1/10W		
R 1082	J24205101	CHIP RES.	RMC1/10T 101J	100	1/10W		
R 1083	J24205330	CHIP RES.	RMC1/10T 330J	33	1/10W		
R 1085	J24205472	CHIP RES.	RMC1/10T 472J	4.7K	1/10W		
R 1090	J24205103	CHIP RES.	RMC1/10T 103J	10K	1/10W		
R 1091	J24205105	CHIP RES.	RMC1/10T 105J	1M	1/10W		
R 1092	J24205472	CHIP RES.	RMC1/10T 472J	4.7K	1/10W		
R 1093	J24205182	CHIP RES.	RMC1/10T 182J	1.8K	1/10W		
R 1094	J24205103	CHIP RES.	RMC1/10T 103J	10K	1/10W		
R 1095	J24205473	CHIP RES.	RMC1/10T 473J	47K	1/10W		
R 1096	J24205154	CHIP RES.	RMC1/10T 154J	150K	1/10W		
R 1097	J24205104	CHIP RES.	RMC1/10T 104J	100K	1/10W		
R 1098	J24205182	CHIP RES.	RMC1/10T 182J	1.8K	1/10W		
R 1099	J24205472	CHIP RES.	RMC1/10T 472J	4.7K	1/10W		
R 1100	J24205104	CHIP RES.	RMC1/10T 104J	100K	1/10W		

RF Unit

REF.	YAESU P/N	DESCRIPTION	MFGR'S DESIG	VALUE	WV	TOL.	VERS.
R 1101	J24205104	CHIP RES.	RMC1/10T 104J	100K	1/10W		
R 1102	J24205473	CHIP RES.	RMC1/10T 473J	47K	1/10W		
R 1103	J24205223	CHIP RES.	RMC1/10T 223J	22K	1/10W		
R 1104	J24205223	CHIP RES.	RMC1/10T 223J	22K	1/10W		
R 1105	J24205104	CHIP RES.	RMC1/10T 104J	100K	1/10W		
R 1106	J24205154	CHIP RES.	RMC1/10T 154J	150K	1/10W		
R 1107	J24205154	CHIP RES.	RMC1/10T 154J	150K	1/10W		
R 1108	J24205154	CHIP RES.	RMC1/10T 154J	150K	1/10W		
R 1109	J24205103	CHIP RES.	RMC1/10T 103J	10K	1/10W		
R 1110	J24205104	CHIP RES.	RMC1/10T 104J	100K	1/10W		
R 1111	J24205104	CHIP RES.	RMC1/10T 104J	100K	1/10W		
R 1112	J24205472	CHIP RES.	RMC1/10T 472J	4.7K	1/10W		
R 1116	J24205393	CHIP RES.	RMC1/10T 393J	39K	1/10W		
R 1117	J24205224	CHIP RES.	RMC1/10T 224J	220K	1/10W		
R 1118	J24205393	CHIP RES.	RMC1/10T 393J	39K	1/10W		
R 1119	J24205224	CHIP RES.	RMC1/10T 224J	220K	1/10W		
R 1120	J24205332	CHIP RES.	RMC1/10T 332J	3.3K	1/10W		
R 1121	J24205223	CHIP RES.	RMC1/10T 223J	22K	1/10W		
R 1123	J24205103	CHIP RES.	RMC1/10T 103J	10K	1/10W		
R 1124	J24205105	CHIP RES.	RMC1/10T 105J	1M	1/10W		
R 1125	J24205333	CHIP RES.	RMC1/10T 333J	33K	1/10W		
R 1126	J24205103	CHIP RES.	RMC1/10T 103J	10K	1/10W		
R 1127	J24205333	CHIP RES.	RMC1/10T 333J	33K	1/10W		
R 1128	J24205224	CHIP RES.	RMC1/10T 224J	220K	1/10W		
R 1129	J24205101	CHIP RES.	RMC1/10T 101J	100	1/10W		
R 1130	J24205681	CHIP RES.	RMC1/10T 681J	680	1/10W		
R 1131	J24205152	CHIP RES.	RMC1/10T 152J	1.5K	1/10W		
R 1132	J24205479	CHIP RES.	RMC1/10T 4R7J	4.7	1/10W		
R 1133	J01275181	CARBON FILM RES.	RD12TJ181 180	180	1/2W		
R 1134	J24205391	CHIP RES.	RMC1/10T 391J	390	1/10W		
R 1135	J05245331	CARBON FILM RES.	RD14TPR331J	330	1/4W		
R 1136	J24205560	CHIP RES.	RMC1/10T 560J	56	1/10W		
R 1137	J05245101	CARBON FILM RES.	RD14TPR101J	100	1/4W		
R 1138	J24205560	CHIP RES.	RMC1/10T 560J	56	1/10W		
R 1139	J24205471	CHIP RES.	RMC1/10T 471J	470	1/10W		
R 1141	J24205101	CHIP RES.	RMC1/10T 101J	100	1/10W		
R 1142	J24205101	CHIP RES.	RMC1/10T 101J	100	1/10W		
R 1145	J24205223	CHIP RES.	RMC1/10T 223J	22K	1/10W		
R 1146	J05245221	CARBON FILM RES.	RD14TPR221J	220	1/4W		
R 1147	J05245331	CARBON FILM RES.	RD14TPR331J	330	1/4W		
R 1148	J24205330	CHIP RES.	RMC1/10T 330J	33	1/10W		
R 1149	J24205473	CHIP RES.	RMC1/10T 473J	47K	1/10W		
R 1150	J24205561	CHIP RES.	RMC1/10T 561J	560	1/10W		
R 1151	J24205472	CHIP RES.	RMC1/10T 472J	4.7K	1/10W		
R 1152	J24205103	CHIP RES.	RMC1/10T 103J	10K	1/10W		
R 1153	J24205331	CHIP RES.	RMC1/10T 331J	330	1/10W		
R 1154	J24205102	CHIP RES.	RMC1/10T 102J	1K	1/10W		
R 1155	J24205102	CHIP RES.	RMC1/10T 102J	1K	1/10W		
R 1156	J24205102	CHIP RES.	RMC1/10T 102J	1K	1/10W		
R 1157	J24205102	CHIP RES.	RMC1/10T 102J	1K	1/10W		
R 1158	J24205681	CHIP RES.	RMC1/10T 681J	680	1/10W		
R 1159	J24205681	CHIP RES.	RMC1/10T 681J	680	1/10W		
R 1160	J24205104	CHIP RES.	RMC1/10T 104J	100K	1/10W		
R 1161	J24205104	CHIP RES.	RMC1/10T 104J	100K	1/10W		
R 1162	J24205103	CHIP RES.	RMC1/10T 103J	10K	1/10W		

REF.	YAESU P/N	DESCRIPTION	MFGR'S DESIG	VALUE	WV	TOL.	VERS.
R 1163	J24205473	CHIP RES.	RMC1/10T 473J	47K	1/10W		
R 1164	J24205104	CHIP RES.	RMC1/10T 104J	100K	1/10W		
R 1166	J24205102	CHIP RES.	RMC1/10T 102J	1K	1/10W		
R 1167	J24205121	CHIP RES.	RMC1/10T 121J	120	1/10W		
R 1168	J24205332	CHIP RES.	RMC1/10T 332J	3.3K	1/10W		
R 1169	J24205153	CHIP RES.	RMC1/10T 153J	15K	1/10W		
RB1001	J40900175	BLOCK RES.	EXB-P811472J				
RL1001	M1190090	RELAY	AG4013 DC12V		DC12V		
T 1001	L0021223	COIL	47.1M R12-6708A				
T 1002	L0021225	COIL	47.1M R12-6707A				
T 1003	L0020788A	COIL	4-1 2D3 TR6X3				
T 1004	L0020788A	COIL	4-1 2D3 TR6X3				
T 1005	L0021225	COIL	47.1M R12-6707A				
T 1006	L0020883	COIL	4-1 2001F				
T 1007	L0022091	COIL	8-1 2001F				
T 1008	L0022092	COIL	9-8 2001F				
T 1009	L0022093	COIL	1-1 2001F				
T 1010	L0021943	COIL	48.64M R12-J767A				
T 1011	L0021943	COIL	48.64M R12-J767A				
T 1013	L0021536	COIL	47.0M				
T 1015	L0020883	COIL	4-1 2001F				
T 1016	L0021462	07 WIDE TRANS 4:1	4-1 3A				
TH1001	G9090013	THERMISTOR	112501-2				
TP1001	Q5000050	TP-K	IPS-1136				
VR1001	J50784503	POT.	EVN-DCAA03B54	50K			
VR1002	J50784503	POT.	EVN-DCAA03B54	50K			
VR1003	J50784503	POT.	EVN-DCAA03B54	50K			
VR1004	J50784503	POT.	EVN-DCAA03B54	50K			
VR1005	J50784503	POT.	EVN-DCAA03B54	50K			
VR1006	J50784503	POT.	EVN-DCAA03B54	50K			
VR1007	J50784503	POT.	EVN-DCAA03B54	50K			
VR1008	J50784503	POT.	EVN-DCAA03B54	50K			
VR1009	J50784503	POT.	EVN-DCAA03B54	50K			
VR1010	J50784502	POT.	EVN-DCAA03B53	5K			
VR1011	J51783502	POT.	EVN-DCAA03B53	5K			
VR1012	J50784103	POT.	EVN-DCAA03B14	10K			
VR1014	J50784103	POT.	EVN-DCAA03B14	10K			
VR1015	J50784503	POT.	EVN-DCAA03B54	50K			DST EXP
VR1015	J50784503	POT.	EVN-DCAA03B54	50K			DST FRA
VR1015	J50784103	POT.	EVN-DCAA03B14	10K			DST BEL
VR1016	J50784103	POT.	EVN-DCAA03B14	10K			
VR1017	J50784103	POT.	EVN-DCAA03B14	10K			
VR1019	J50784103	POT.	EVN-DCAA03B14	10K			
VR1020	J50784503	POT.	EVN-DCAA03B54	50K			
VR1021	J50784502	POT.	EVN-DCAA03B53	5K			
XF1001	H1102196	XTAL	47G10B1				
	R8049490A	CABLE SEAL					

REF.	YAESU P/N	DESCRIPTION	MFGR'S DESIG	VALUE	WV	TOL.	VERS.
	R0131630	SHIELD CASE					
	R0136980	SHIELD CASE					
	R0136990	SHIELD COVER					
	R0136960	FITTING R					
	R0136970	FITTING L					
	R0139800	REAR SHIELD					
	R3129530	XTAL HOLDER(2 pcs)					

Source

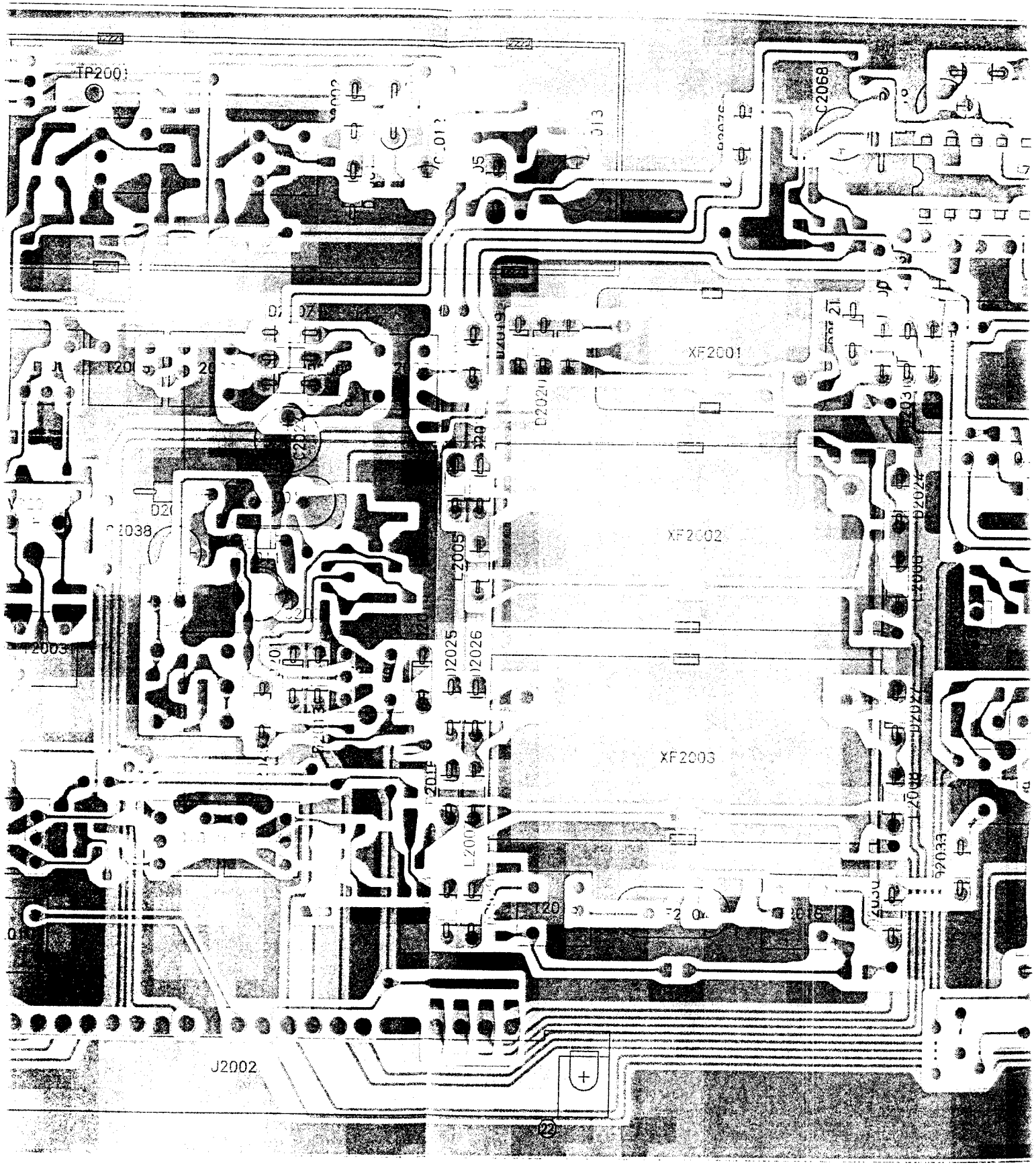
TP2001
C2068
XF2001
XF2002
XF2003
J2002
L2005
D2025
D2026
D2024
D2033
22

Source

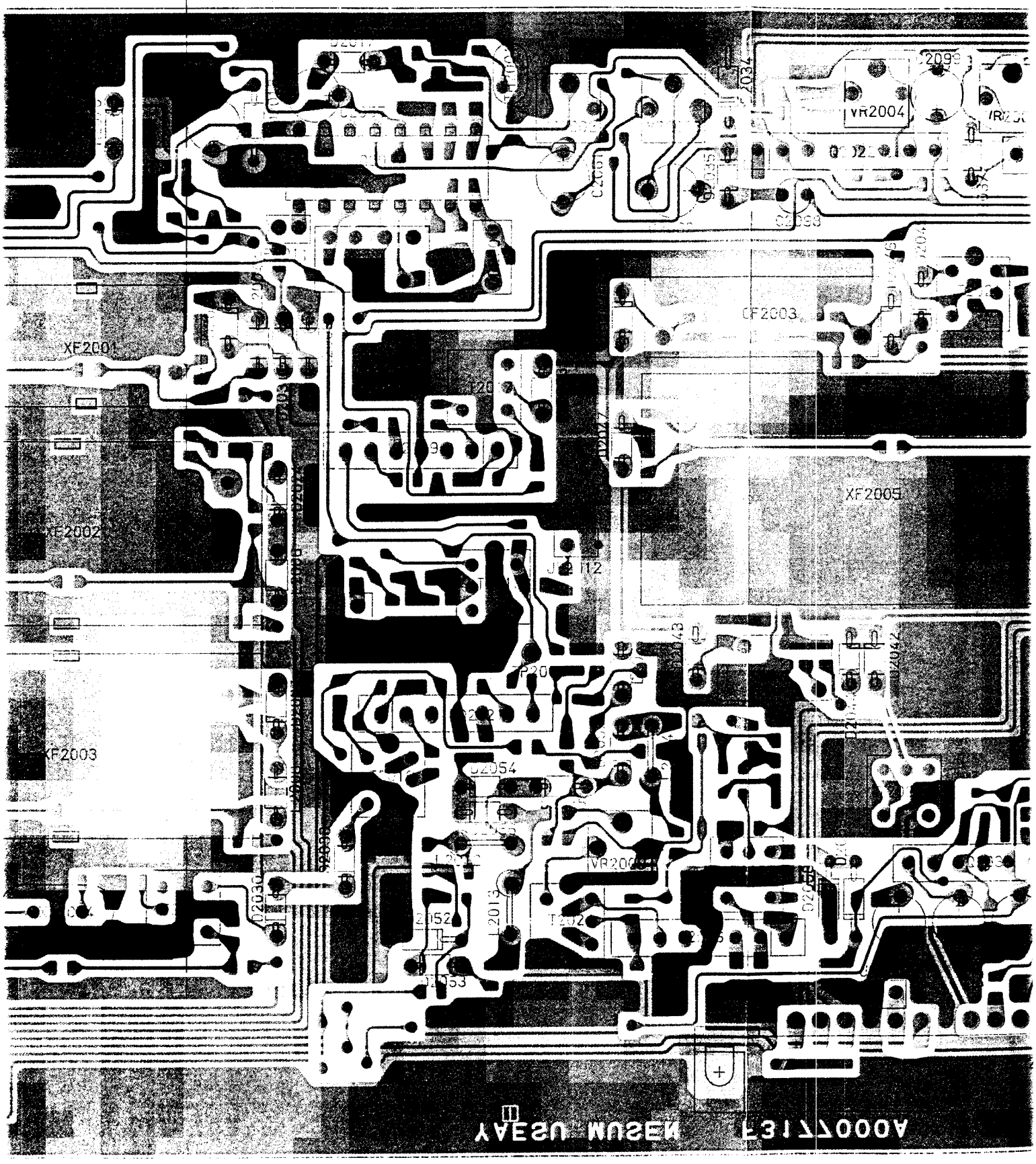
VR2004
XF2001
XF2002
XF2003
XF2005
PIN 16

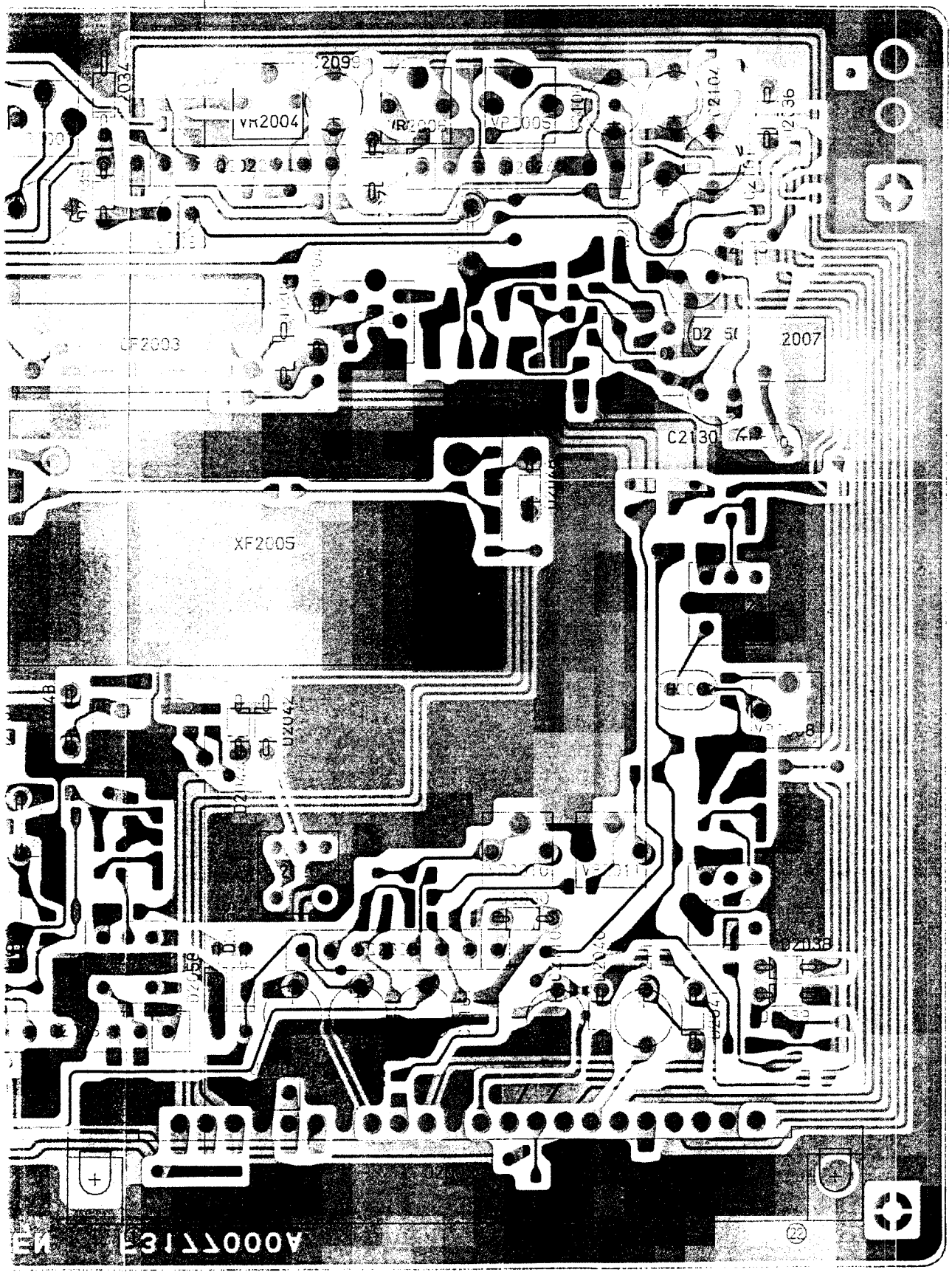

("component" side)

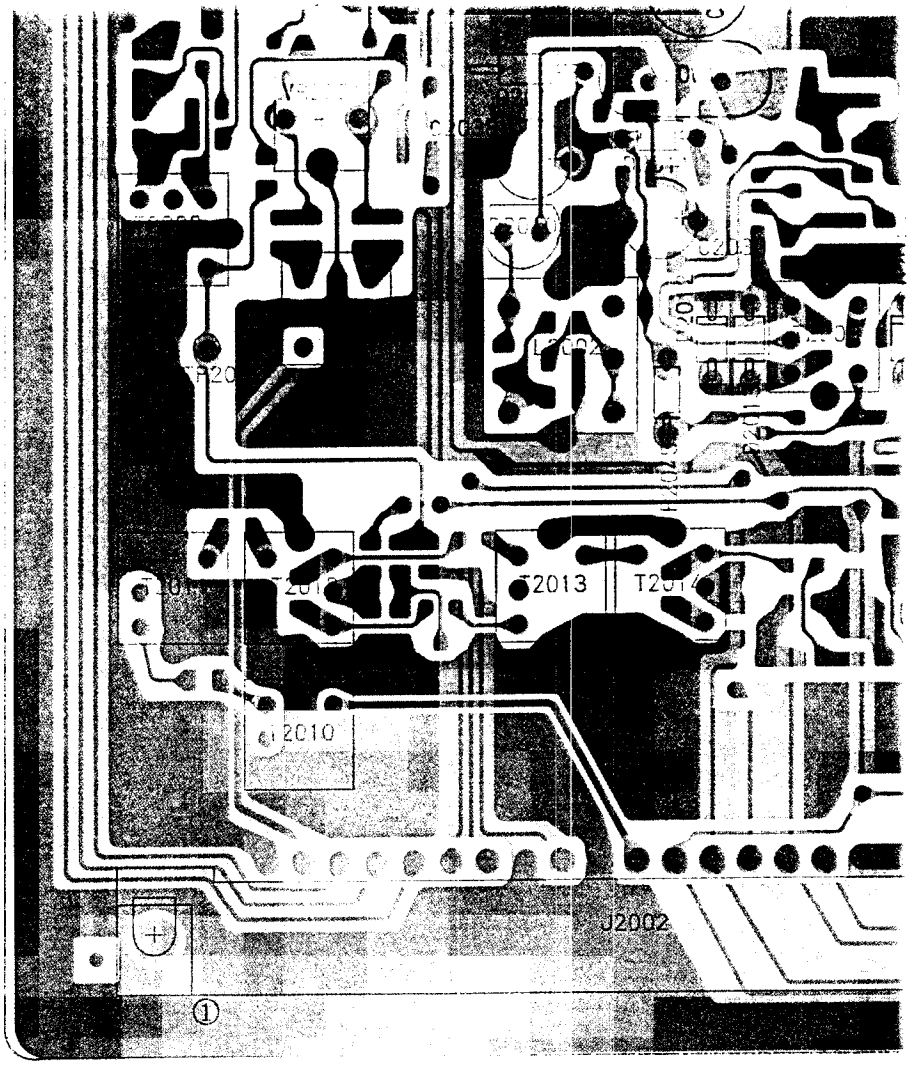

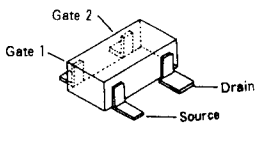

3SK131(V12)
(Q2001, 2002, 2032,
2033, 2037)
3SK179(V02)
(Q2013)

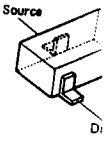

2SK210GF
(Q2034)
2SK302GF
(Q2005, 2
2012, 201

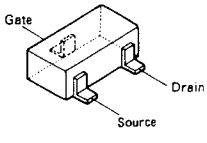

2SK160(K6)
(Q2023, 2038)

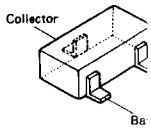

2SA1162GR (
(Q2035)
2SC2620(QB
(Q2007)
2SC2712GR (
(Q2003, 2004
2009, 2020,
2027, 2029,
2031)
FA1A4P (L3
(Q2010, 201
2018, 2026,

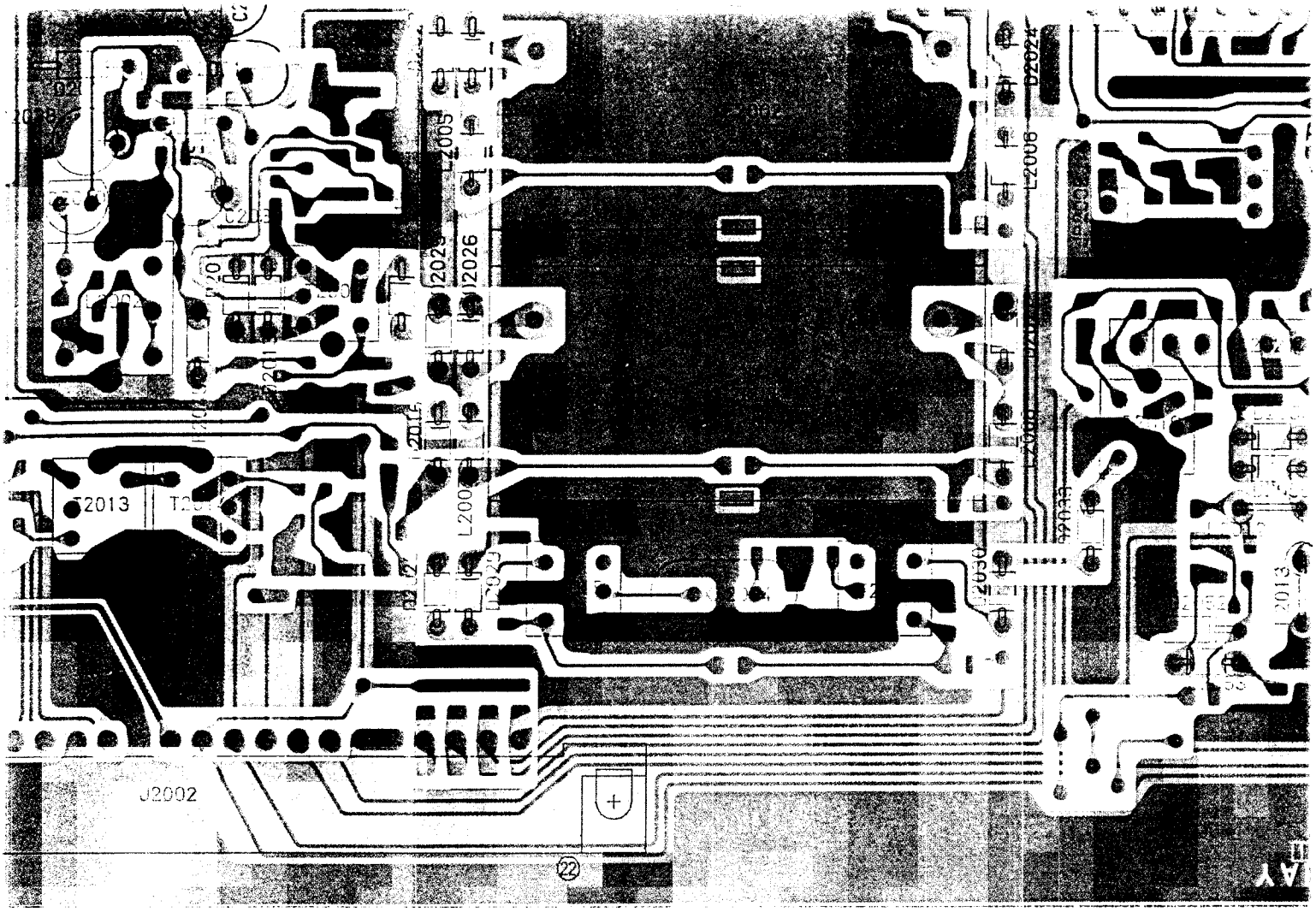

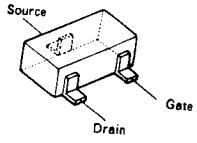

2SK210GR (YG)
(Q2034)
2SK302GR (TGR)
(Q2005, 2006, 2011,
2012, 2014)

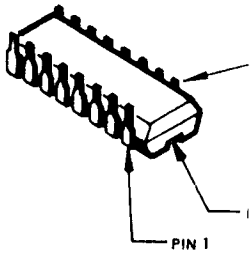

MC3357P
(Q2017)

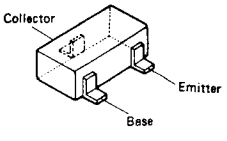

2SA1162GR (SG)
(Q2035)
2SC2620(QB)
(Q2007)
2SC2712GR (LG)
(Q2003, 2004, 2008,
2009, 2020, 2025,
2027, 2029, 2030,
2031)
FA1A4P (L34)
(Q2010, 2015, 2016,
2018, 2026, 2028)

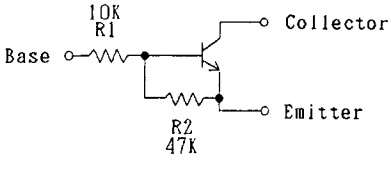

FA1A4P CIRCUIT DIAGRAM

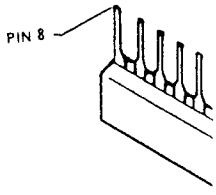

M5218AL
(Q2022, 2024, 2039)

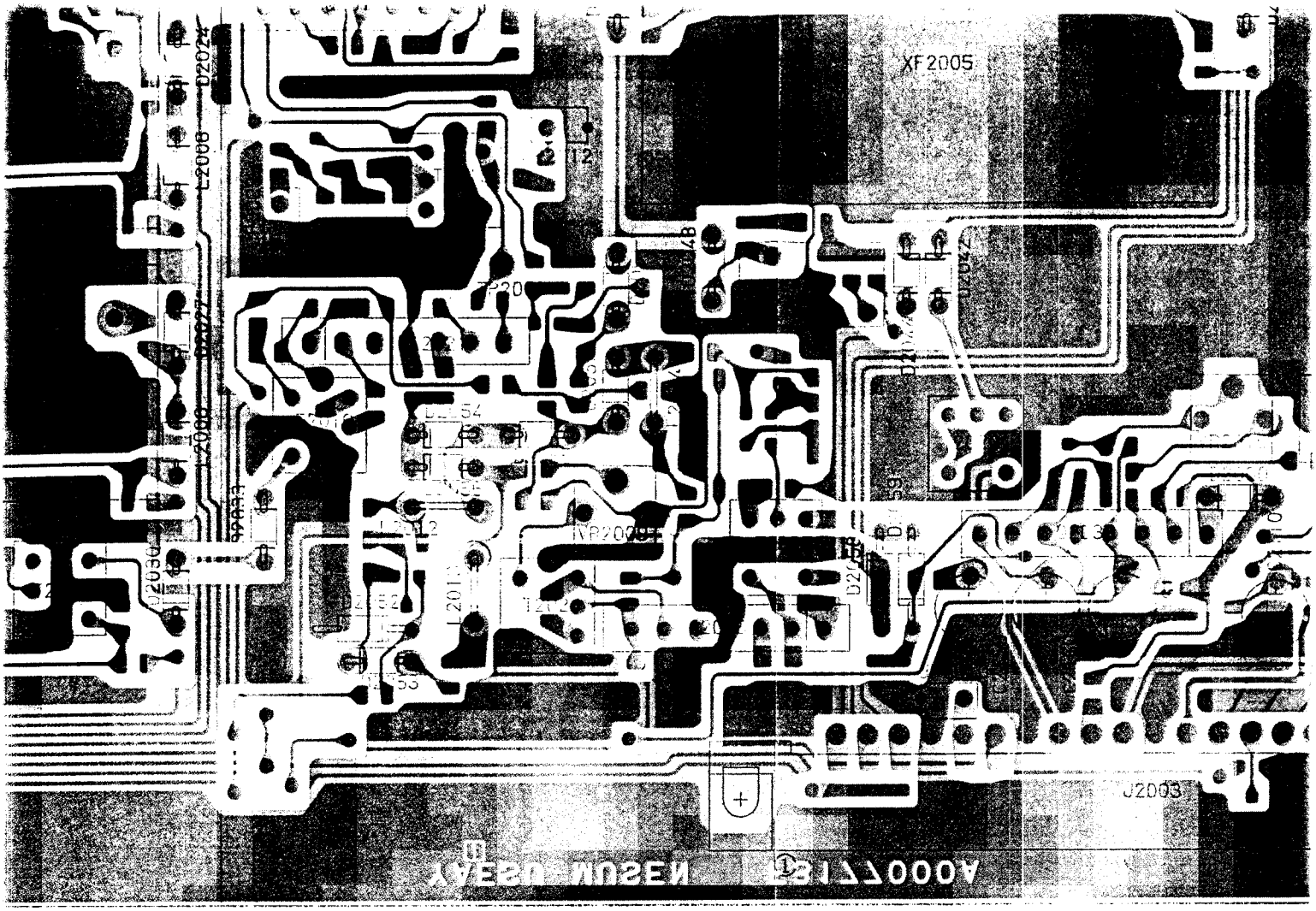

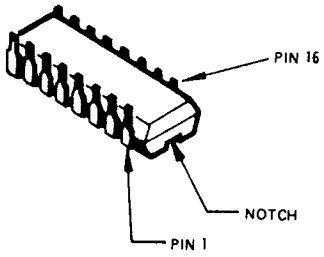

MC3357P
(Q2017)

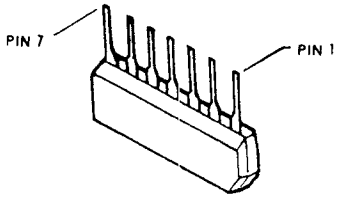

TA7302P
(Q2036)

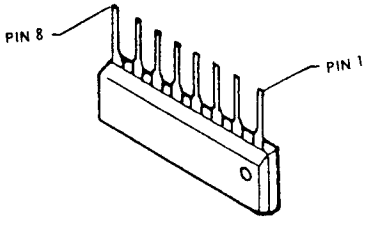

M5218AL
(Q2022, 2024, 2039)

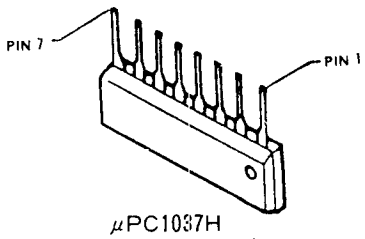

μPC1037H
(Q2019, 2021)

· Collector

· Emitter

GRAM

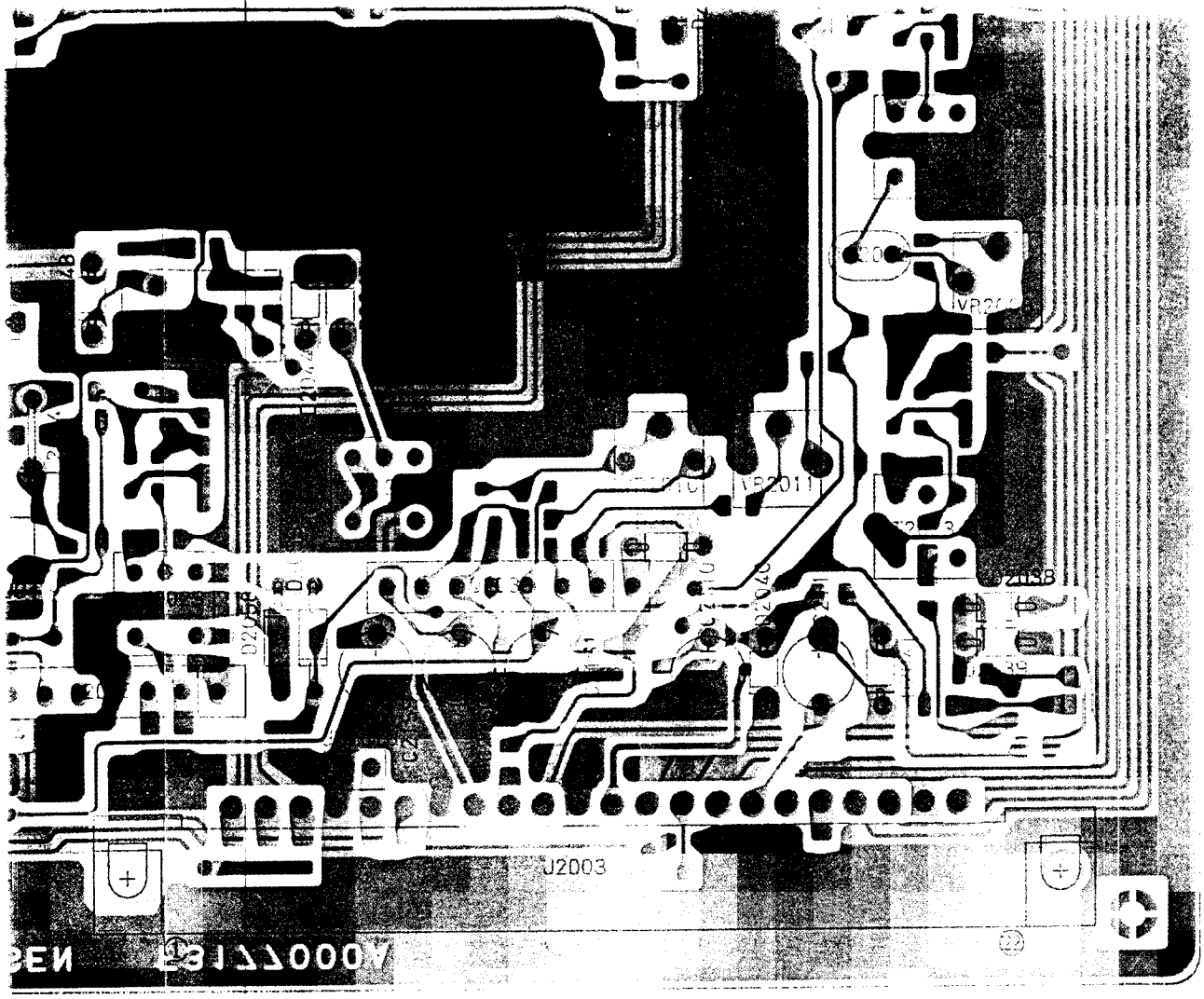

("component" side)

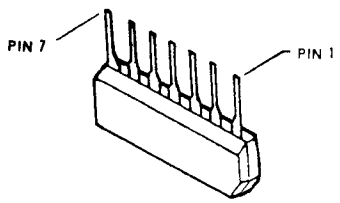

TA7302P
(Q2036)

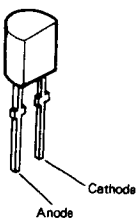

FC-53M-5
(D2010, 2050)

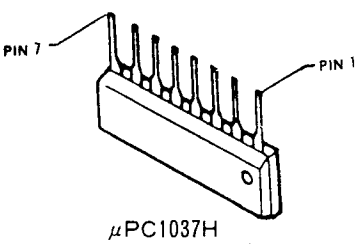

μPC1037H
(Q2019, 2021)

IF Unit

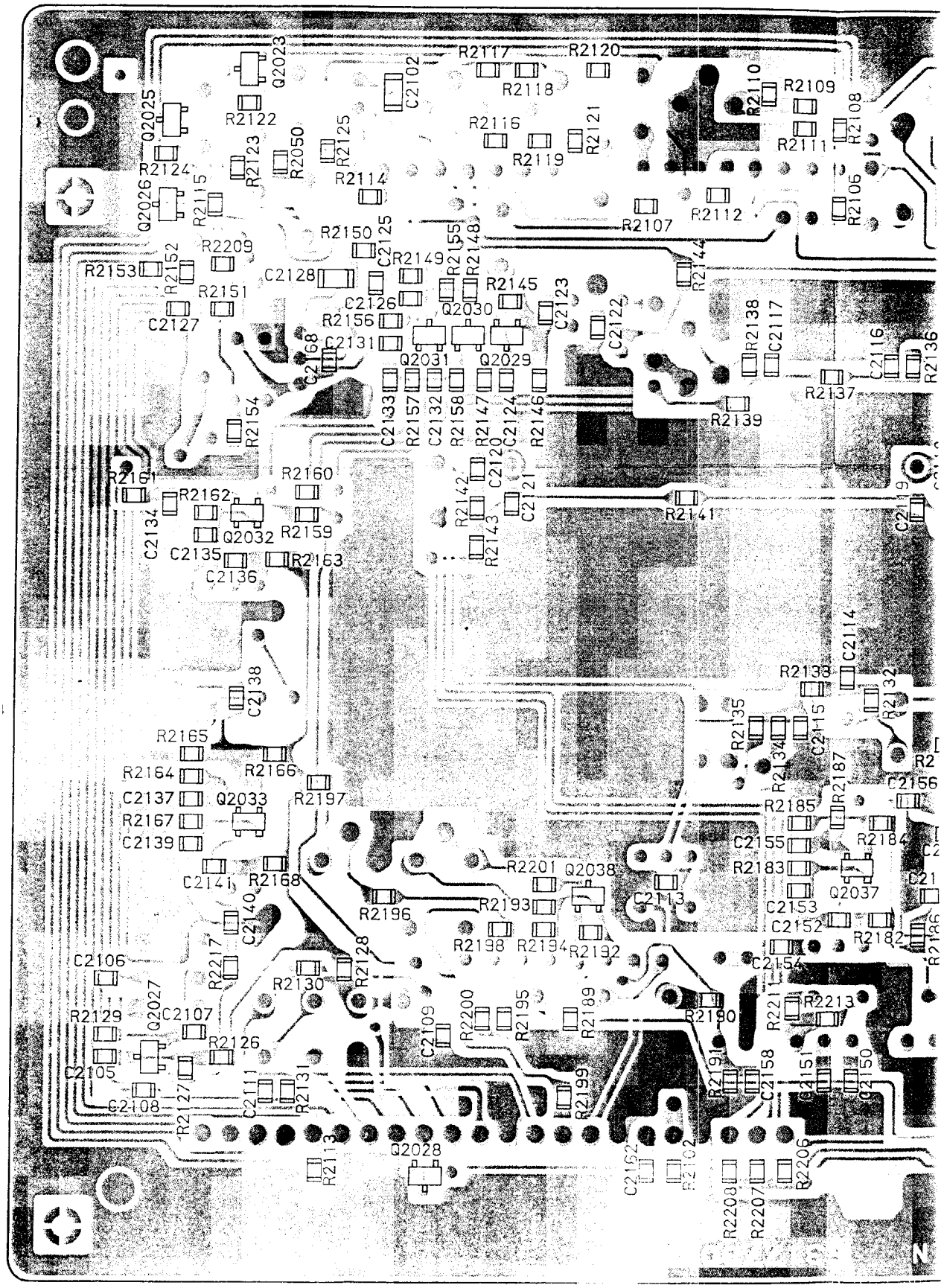

Q2023
R2117
R2120
C2102
R2118
R2110
R2109
Q2025
R2122
R2116
R2121
R2108
R2111
R2124
R2123
R2050
R2125
R2119
R2114
Q2026
R2115
R2106
R2112
R2107
R2150
C2125
R2155
R2148
R2209
R2153
R2152
R2149
R2144
C2128
R2145
R2151
C2126
Q2030
C2123
C2127
R2156
C2122
R2138
C2117
C2131
C2168
Q2031
Q2029
C2116
R2136
R2137
R2154
C2133
R2157
C2132
R2158
R2147
C2124
R2146
R2139
R2161
R2160
C2120
R2162
R2142
C2121
R2141
C2134
Q2032
R2159
R2143
C2135
R2163
C2136
C2114
R2133
C2138
R2132
R2135
R2165
C2115
R2134
R2164
R2166
R2187
C2156
C2137
Q2033
R2197
R2185
R2167
C2155
R2184
C2139
R2183
R2201
Q2038
C2141
R2168
Q2037
C2113
R2193
R2196
C2153
C2140
C2152
R2182
R2198
R2194
R2192
C2106
R2217
R2128
C2154
R2130
R2200
R2195
R2189
R2190
R2221
R2213
R2129
Q2027
C2107
C2109
R2126
C2105
R2191
C2158
C2151
C2150
C2108
R2127
C2111
R2131
R2199
Q2028
R2113
C2162
R2102
R2206
R2208
R2207

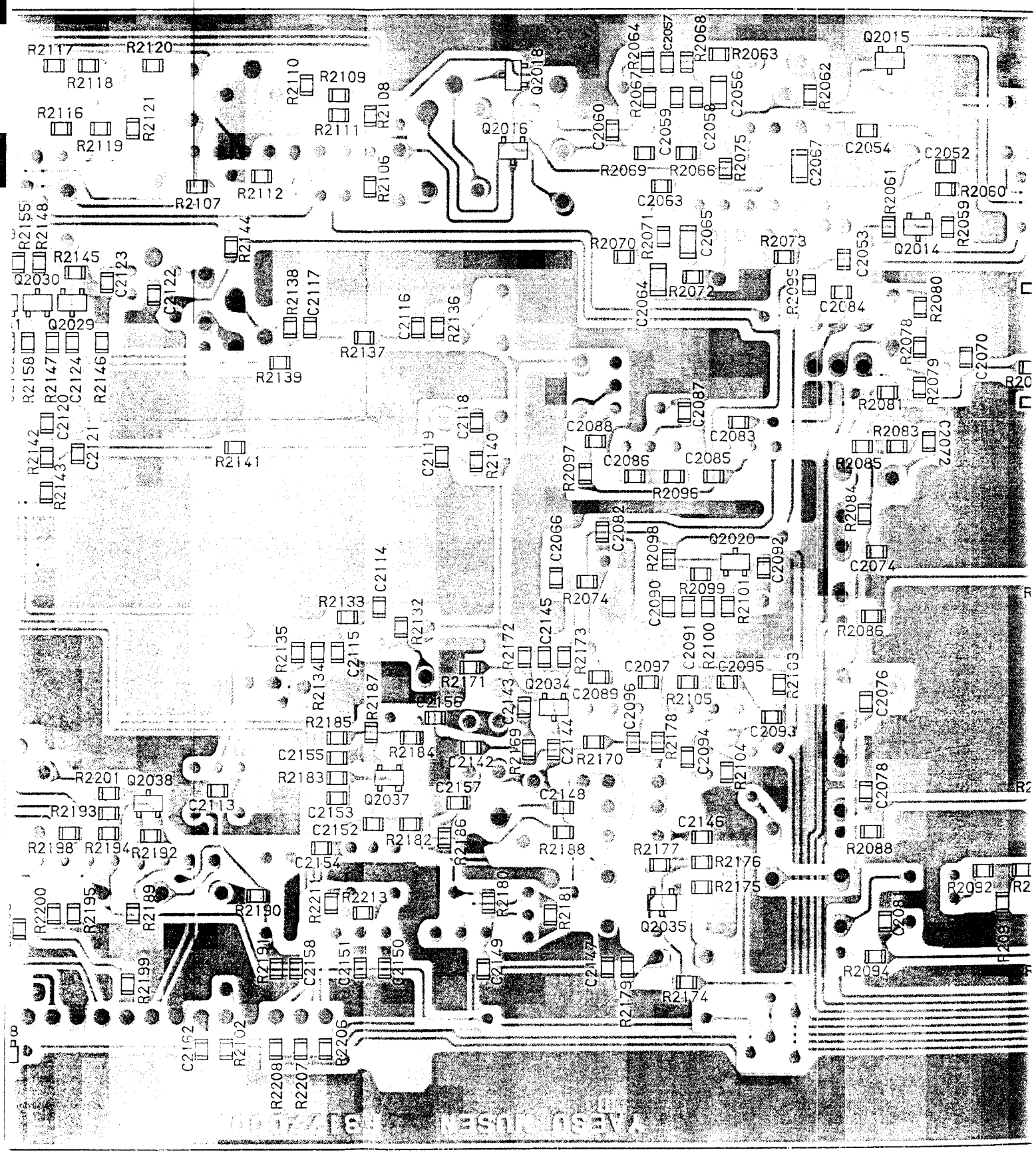
R2117
R2120
R2118
R2116
R2121
R2119
R2110
R2109
R2108
R2111
R2106
R2107
R2112
Q2018
Q2016
R2064
C2057
R2068
R2063
Q2015
R2067
C2056
R2062
C2060
C2059
C2058
C2054
C2052
R2069
R2066
R2075
C2067
C2063
R2061
R2060
R2155
R2148
R2144
R2070
R2071
C2065
R2073
C2053
R2059
Q2014
R2145
Q2030
C2123
C2122
R2138
C2117
C2064
R2072
R2095
C2084
R2080
Q2029
C2116
R2136
R2078
C2070
R2158
R2147
C2124
R2146
R2137
R2139
R2079
R2081
C2120
C2118
C2087
C2088
C2083
R2083
C2072
R2142
C2121
R2141
C2119
R2140
R2097
C2086
C2085
R2085
R2143
R2096
R2084
C2066
C2082
R2098
Q2020
C2092
C2074
C2114
R2099
R2101
R2074
C2090
R2133
R2132
R2086
R2135
C2115
R2172
C2145
R2173
C2091
R2100
C2097
C2095
R2103
R2134
R2171
Q2034
C2089
C2076
R2187
C2156
C2143
C2096
R2105
R2185
C2093
R2178
C2155
R2184
C2142
R2169
C2144
R2170
C2094
R2104
R2201
Q2038
R2183
C2157
C2078
C2113
Q2037
C2148
R2193
C2153
C2146
C2152
R2182
R2186
R2188
R2177
R2088
R2198
R2194
R2192
C2154
R2176
R2175
R2092
R2200
R2195
R2189
R2190
R2211
R2213
R2180
R2181
Q2035
C2081
R2191
C2158
C2151
C2150
C2149
C2147
R2094
R2199
R2179
R2174
C2162
R2102
R2206
R2208
R2207

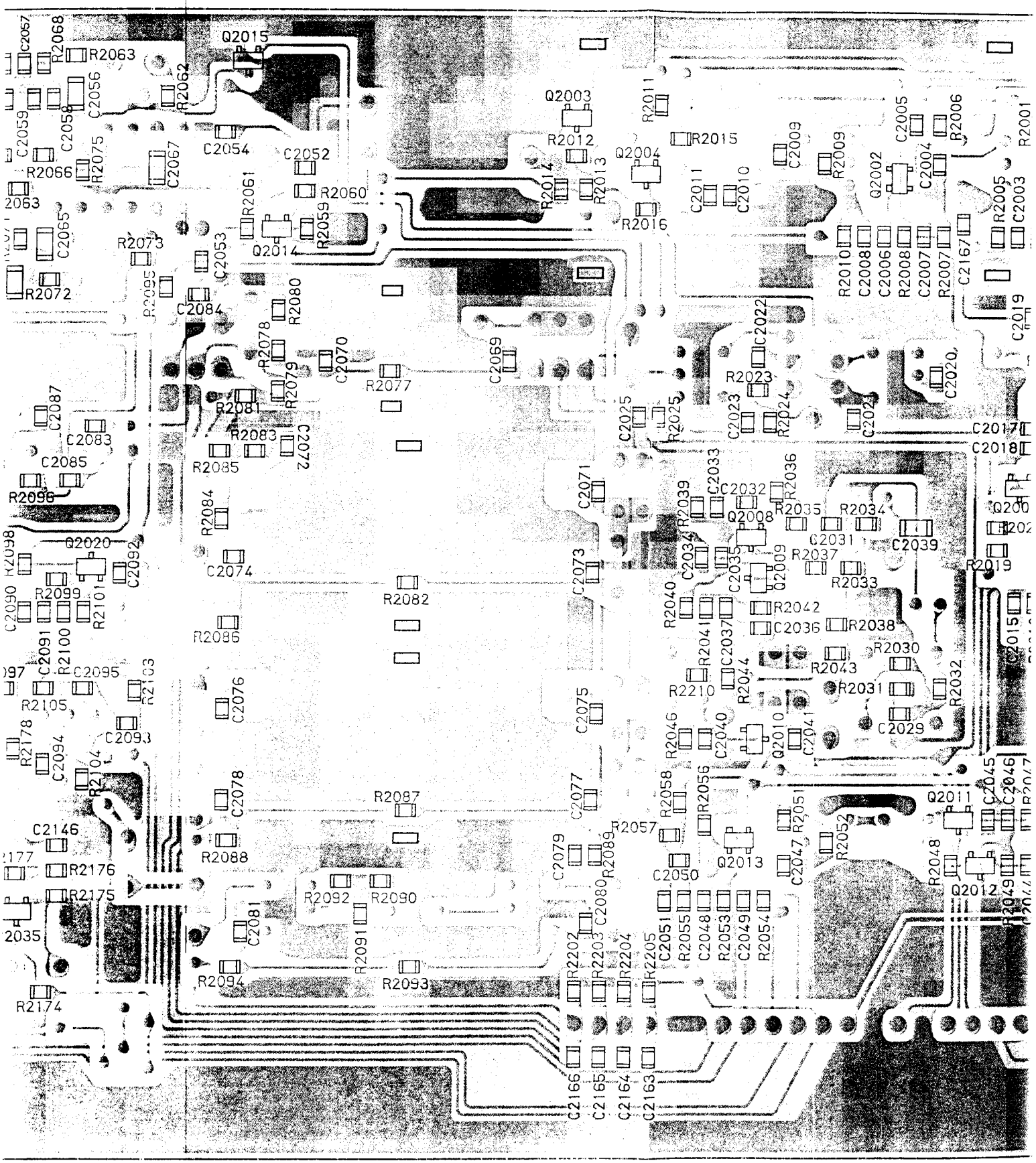
Q2015
R2063
R2062
C2056
C2058
C2059
R2075
C2067
C2054
C2052
R2066
R2060
R2061
R2059
Q2014
C2053
R2073
C2065
R2072
C2084
R2080
R2078
C2070
R2077
C2069
R2079
R2081
C2087
C2083
R2083
C2072
C2085
R2085
R2096
R2084
Q2020
C2092
C2074
R2099
R2101
C2090
R2082
R2086
C2091
R2100
C2095
R2105
C2076
C2093
R2178
C2094
R2104
C2078
R2087
C2146
R2088
R2176
R2175
R2092
R2090
C2081
R2091
R2094
R2093
R2174
Q2003
R2012
R2011
R2015
Q2004
R2014
R2013
R2016
C2011
C2010
C2009
R2009
C2005
R2006
R2001
Q2002
C2004
R2005
C2003
R2010
C2008
C2006
R2008
C2007
R2007
C2167
C2019
C2022
R2023
C2020
C2025
R2025
C2023
R2024
C2017
C2018
C2071
C2033
C2032
R2036
R2039
Q2008
R2035
R2034
C2031
C2039
C2034
C2035
Q2009
R2037
R2033
R2019
C2073
R2040
R2042
C2036
R2038
R2041
C2037
R2030
R2043
R2044
R2210
R2031
R2032
C2075
C2029
R2046
C2040
Q2010
C2041
C2077
R2058
R2056
R2051
Q2011
C2045
C2046
R2057
R2052
C2079
R2089
Q2013
C2047
R2048
C2050
Q2012
C2080
C2051
R2055
C2048
R2053
C2049
R2054
R2202
R2203
R2204
R2205
C2166
C2165
C2164
C2163

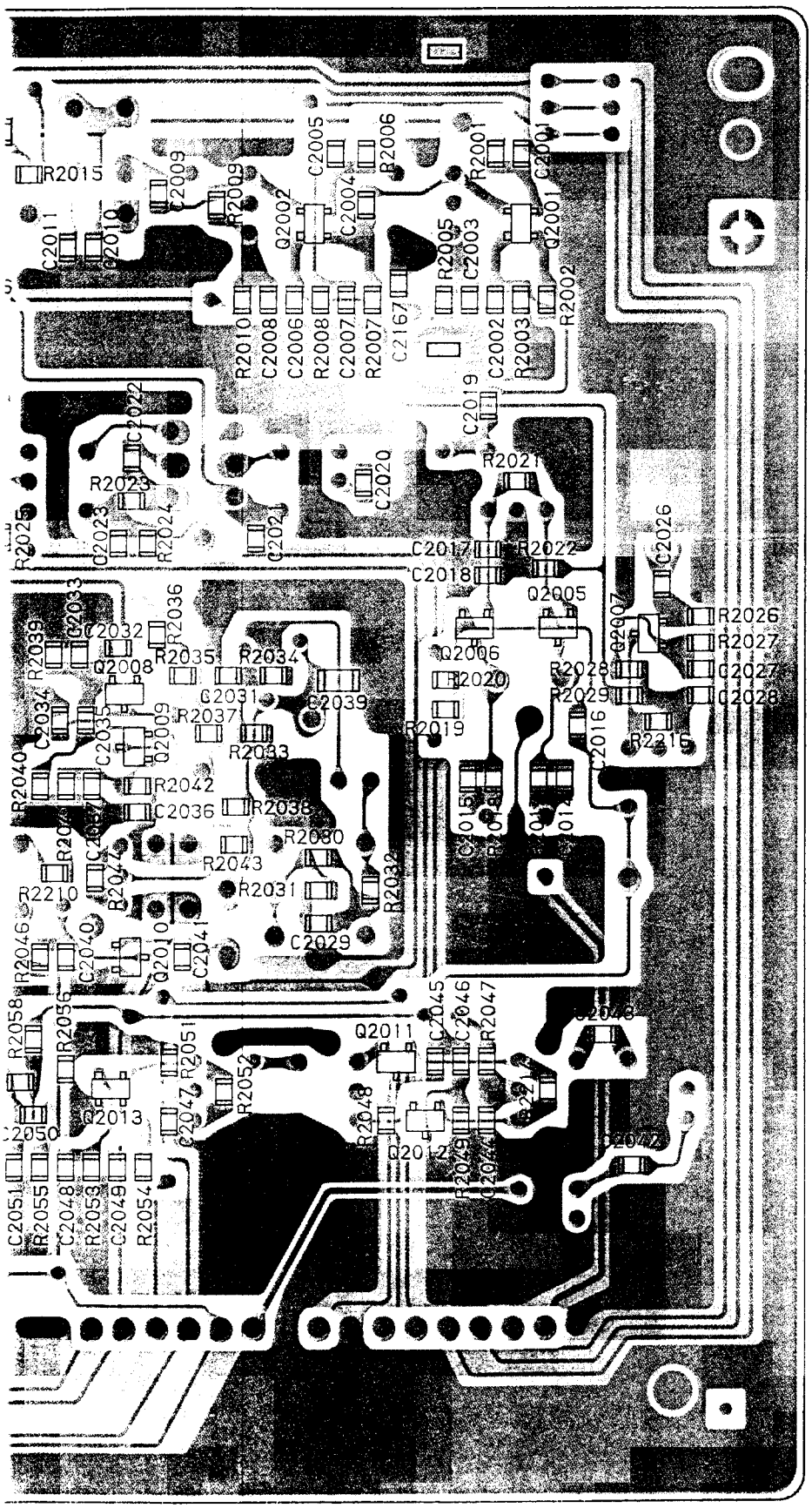

("chip only" side)

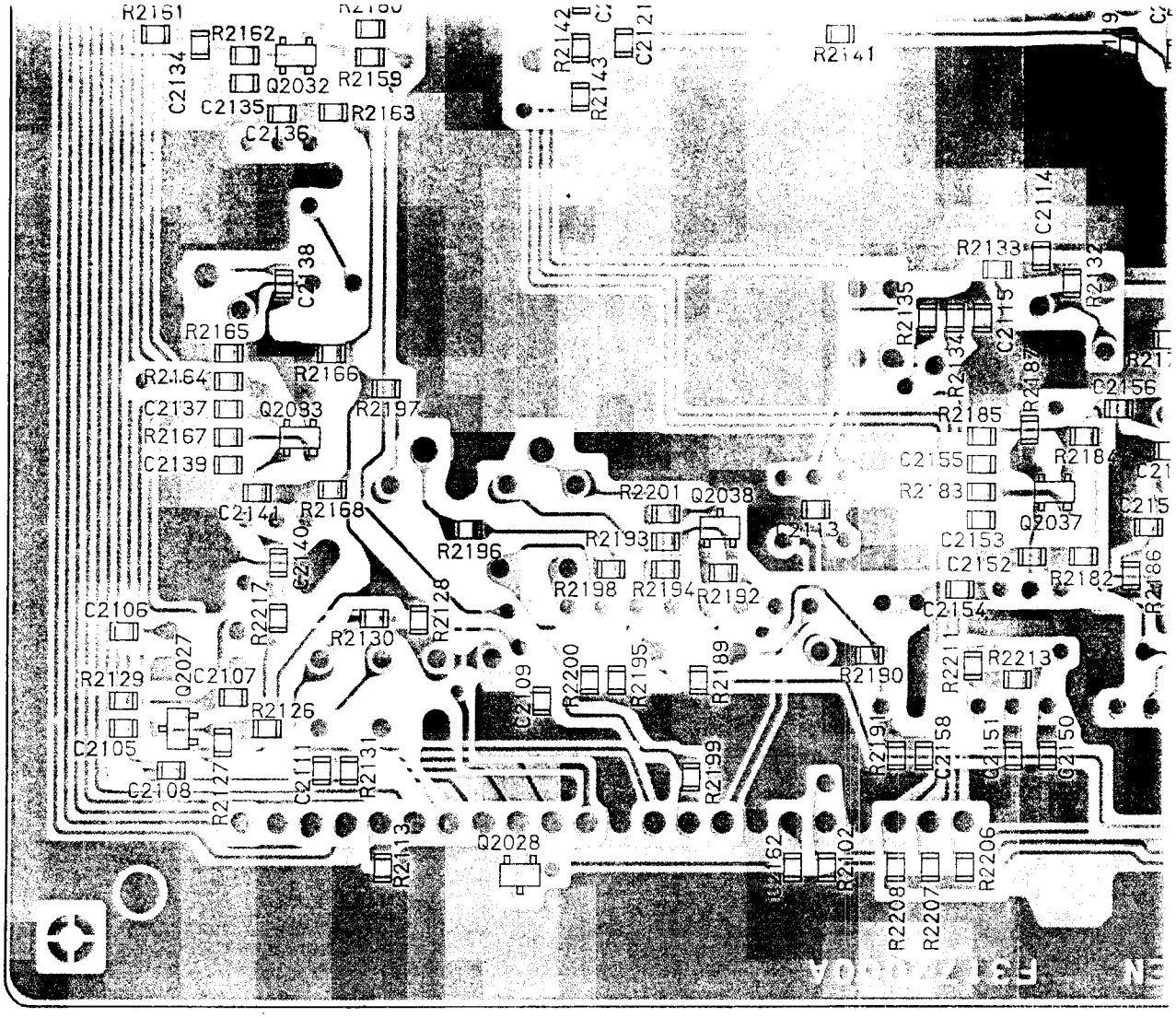
R2161
R2162
Q2032
R2159
C2134
C2135
R2163
C2136
R2142
R2143
C2121
R2141
C2114
R2133
R2132
C2138
R2135
C2115
R2165
R2134
R2187
R2164
R2166
C2156
C2137
Q2033
R2197
R2185
R2167
C2155
R2184
C2139
R2183
R2201
Q2038
C2141
R2168
C2113
Q2037
R2193
C2153
R2196
C2140
C2152
R2182
R2198
R2194
R2192
C2154
C2106
R2217
R2128
R2130
R2211
R2213
R2129
Q2027
C2107
R2200
R2195
R2189
R2190
C2109
R2126
C2105
R2191
C2158
C2151
C2150
C2108
R2127
C2111
R2131
R2199
Q2028
R2113
C2162
R2102
R2206
R2208
R2207

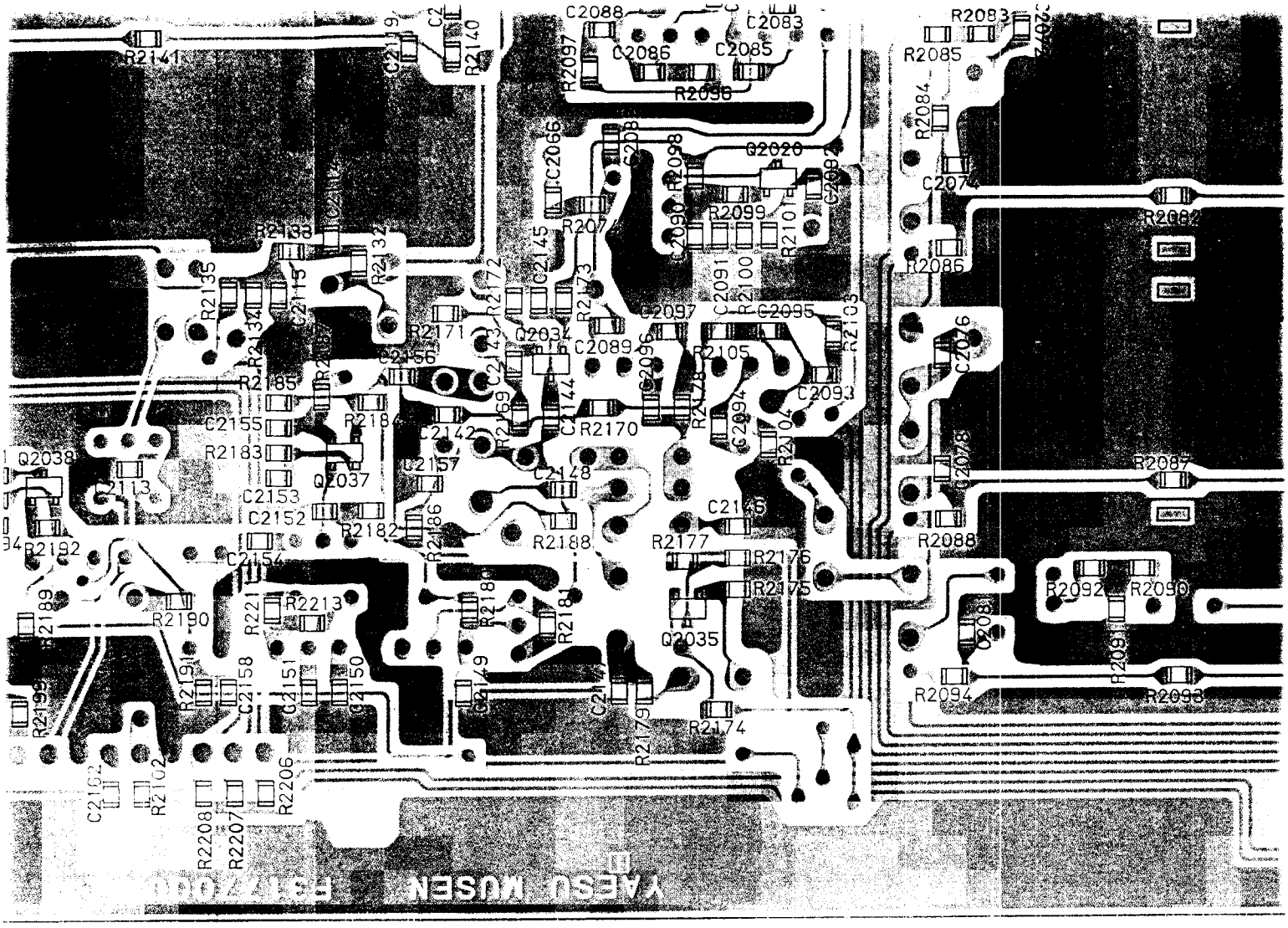
YAESU MUSEN
R2141
C2088
C2083
C2086
C2085
R2097
R2096
R2083
R2085
R2084
C2074
R2082
R2086
C2076
C2078
R2087
R2088
R2092
R2090
R2094
R2093
Q2020
R2099
R2101
C2066
R2074
R2133
R2132
R2135
R2134
R2171
Q2034
C2089
C2097
C2095
R2105
C2093
R2185
C2155
R2183
Q2038
Q2037
C2153
C2152
R2182
R2192
C2154
R2189
R2190
R2213
R2188
R2177
R2176
R2175
Q2035
R2174
R2179
C2162
R2102
R2208
R2207
R2206
C2158
C2151
C2150
C2149
C2148
C2157
C2142
R2170
C2144
C2145
R2172
R2173
C2091
R2100
R2103
C2094
R2104
C2096
R2178
R2186
R2181
R2180
R2199
R2191
R2221

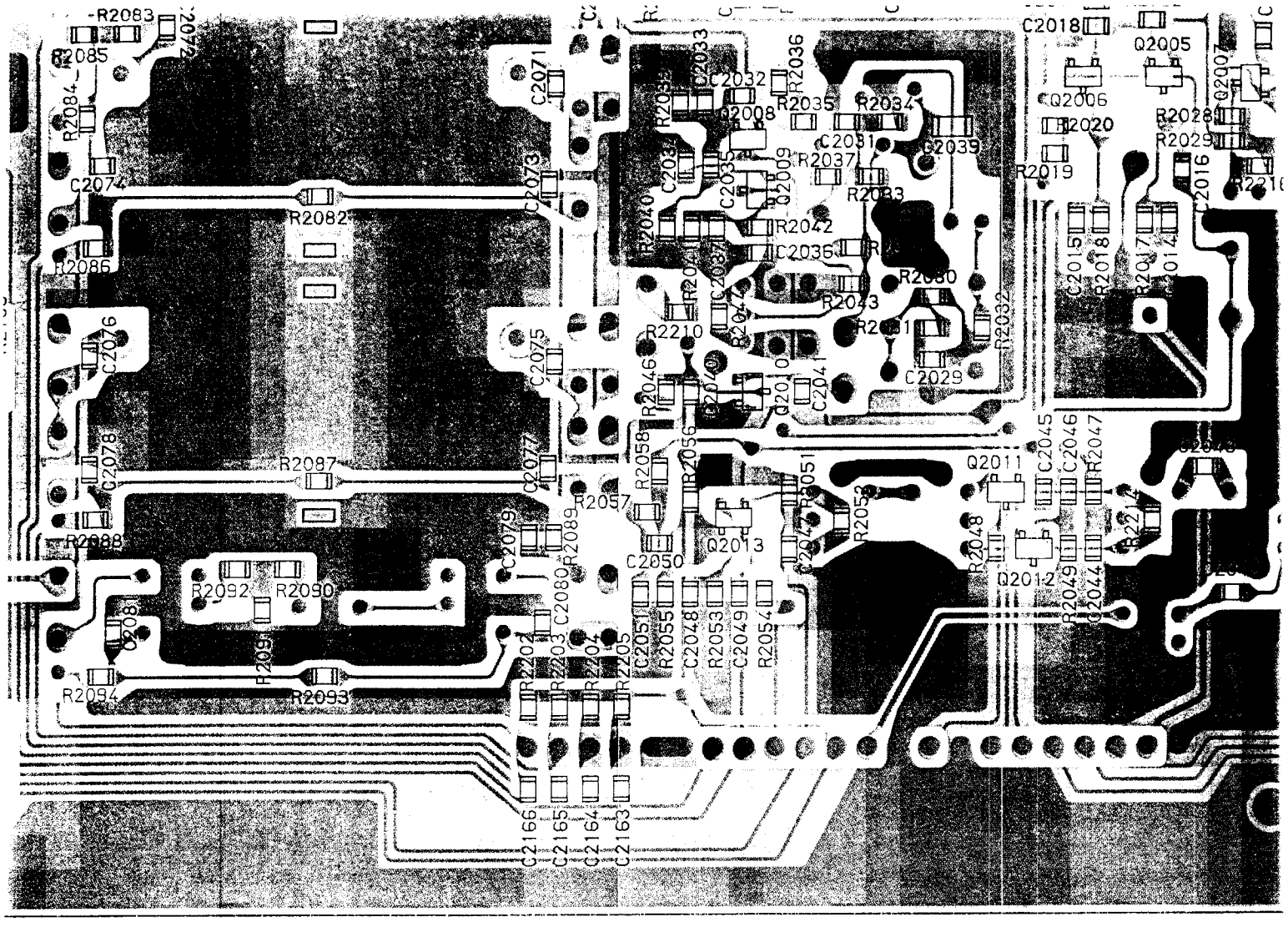
R2083
R2085
R2084
C2074
R2082
R2086
C2076
C2078
R2087
R2088
R2092
R2090
R2094
R2093
C2071
C2073
C2075
C2077
C2079
R2089
C2080
R2057
R2058
R2056
R2046
R2210
R2040
R2042
C2036
R2043
R2032
C2029
C2041
C2032
R2036
R2035
R2034
Q2008
C2031
R2037
R2033
Q2009
C2035
C2037
R2051
R2053
Q2013
C2050
C2051
R2055
C2048
R2053
C2049
R2054
R2202
R2203
R2204
R2205
C2166
C2165
C2164
C2163
C2018
Q2005
Q2006
R2020
R2028
R2029
R2019
C2016
C2015
R2018
R2017
Q2011
C2045
C2046
R2047
R2048
Q2012
R2049
C2044

("chip o

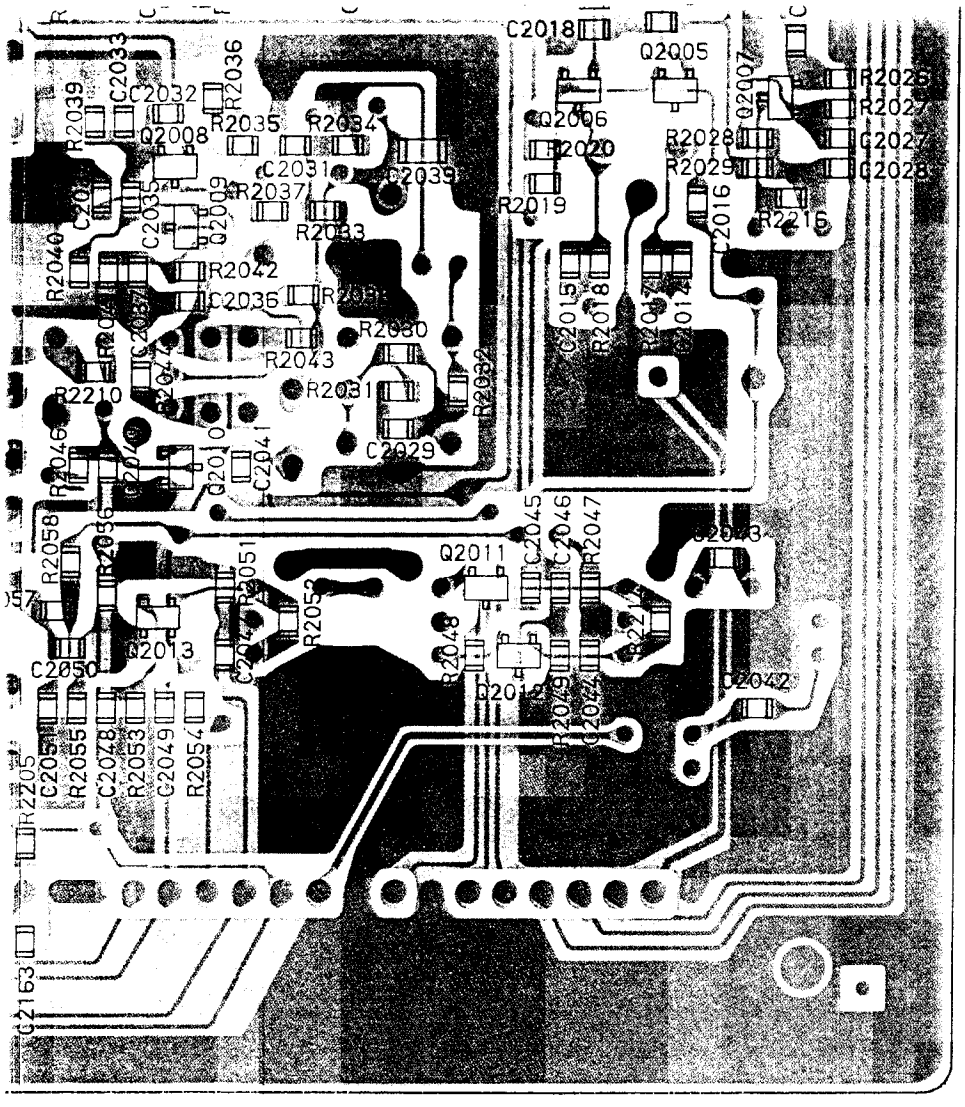

("chip only" side)

REF.	YAESU P/N	DESCRIPTION	MFGR'S DESIG	VALUE	WV	TOL.	VERS.
		*** IF UNIT ***					
	CA0228001	P.C.B. W COMP. (W CW-W FILTER)					
	CA0228002	P.C.B. W COMP. (W SSB-N, CW-W, CW-N FILTER)					
	CA0228003	P.C.B. W COMP.					
	F3177000A	P.C.B. W/O COMP.					
C 2001	K22170817	CHIP CAP.	GRM40B103M50PT	0.01uF	50V	B	
C 2002	K22170817	CHIP CAP.	GRM40B103M50PT	0.01uF	50V	B	
C 2003	K22170817	CHIP CAP.	GRM40B103M50PT	0.01uF	50V	B	
C 2004	K22170211	CHIP CAP.	GRM40CH100D50PT	10pF	50V	CH	
C 2005	K22170817	CHIP CAP.	GRM40B103M50PT	0.01uF	50V	B	
C 2006	K22170817	CHIP CAP.	GRM40B103M50PT	0.01uF	50V	B	
C 2007	K22170817	CHIP CAP.	GRM40B103M50PT	0.01uF	50V	B	
C 2008	K22170817	CHIP CAP.	GRM40B103M50PT	0.01uF	50V	B	
C 2009	K22170219	CHIP CAP.	GRM40CH220J50PT	22pF	50V	CH	
C 2010	K22170243	CHIP CAP.	GRM40CH221J50PT	220pF	50V	CH	
C 2011	K22170243	CHIP CAP.	GRM40CH221J50PT	220pF	50V	CH	
C 2012	K46170021	AL. ELECTRO. CAP.	50V100M5X11TR5	10uF	50V		
C 2013	K46170021	AL. ELECTRO. CAP.	50V100M5X11TR5	10uF	50V		
C 2014	K22170805	CHIP CAP.	GRM40B102M50PT	0.001uF	50V	B	
C 2015	K22170805	CHIP CAP.	GRM40B102M50PT	0.001uF	50V	B	
C 2016	K22170805	CHIP CAP.	GRM40B102M50PT	0.001uF	50V	B	
C 2017	K22170805	CHIP CAP.	GRM40B102M50PT	0.001uF	50V	B	
C 2018	K22170817	CHIP CAP.	GRM40B103M50PT	0.01uF	50V	B	
C 2019	K22170235	CHIP CAP.	GRM40CH101J50PT	100pF	50V	CH	
C 2020	K22170211	CHIP CAP.	GRM40CH100D50PT	10pF	50V	CH	
C 2021	K22170817	CHIP CAP.	GRM40B103M50PT	0.01uF	50V	B	
C 2022	K22170817	CHIP CAP.	GRM40B103M50PT	0.01uF	50V	B	
C 2023	K22170817	CHIP CAP.	GRM40B103M50PT	0.01uF	50V	B	
C 2024	K46170024	AL. ELECTRO. CAP.	50V470M6X11TR5	47uF	50V		
C 2025	K22170817	CHIP CAP.	GRM40B103M50PT	0.01uF	50V	B	
C 2026	K22170243	CHIP CAP.	GRM40CH221J50PT	220pF	50V	CH	
C 2027	K22170805	CHIP CAP.	GRM40B102M50PT	0.001uF	50V	B	
C 2028	K22170805	CHIP CAP.	GRM40B102M50PT	0.001uF	50V	B	
C 2029	K22170805	CHIP CAP.	GRM40B102M50PT	0.001uF	50V	B	
C 2030	K46170021	AL. ELECTRO. CAP.	50V100M5X11TR5	10uF	50V		
C 2031	K22170817	CHIP CAP.	GRM40B103M50PT	0.01uF	50V	B	
C 2032	K22170243	CHIP CAP.	GRM40CH221J50PT	220pF	50V	CH	
C 2033	K22170235	CHIP CAP.	GRM40CH101J50PT	100pF	50V	CH	
C 2034	K22170817	CHIP CAP.	GRM40B103M50PT	0.01uF	50V	B	
C 2035	K22170211	CHIP CAP.	GRM40CH100D50PT	10pF	50V	CH	
C 2036	K22170817	CHIP CAP.	GRM40B103M50PT	0.01uF	50V	B	
C 2037	K22170817	CHIP CAP.	GRM40B103M50PT	0.01uF	50V	B	
C 2038	K46170021	AL. ELECTRO. CAP.	50V100M5X11TR5	10uF	50V		
C 2039	K22141809	CHIP CAP.	GRM42-6B104M25PT	0.1uF	25V	B	
C 2040	K22170817	CHIP CAP.	GRM40B103M50PT	0.01uF	50V	B	
C 2041	K22170817	CHIP CAP.	GRM40B103M50PT	0.01uF	50V	B	
C 2042	K22170202	CHIP CAP.	GRM40CK010C50PT	1pF	50V	CK	
C 2043	K22170227	CHIP CAP.	GRM40CH470J50PT	47pF	50V	CH	
C 2044	K22170817	CHIP CAP.	GRM40B103M50PT	0.01uF	50V	B	
C 2045	K22170817	CHIP CAP.	GRM40B103M50PT	0.01uF	50V	B	
C 2046	K22170817	CHIP CAP.	GRM40B103M50PT	0.01uF	50V	B	
C 2047	K22170817	CHIP CAP.	GRM40B103M50PT	0.01uF	50V	B	

IF UNIT

REF.	YAESU P/N	DESCRIPTION	MFGR'S DESIG	VALUE	WV	TOL.	VERS.
C 2048	K22170817	CHIP CAP.	GRM40B103M50PT	0.01uF	50V	B	
C 2049	K22170817	CHIP CAP.	GRM40B103M50PT	0.01uF	50V	B	
C 2050	K22170817	CHIP CAP.	GRM40B103M50PT	0.01uF	50V	B	
C 2051	K22170817	CHIP CAP.	GRM40B103M50PT	0.01uF	50V	B	
C 2052	K22170817	CHIP CAP.	GRM40B103M50PT	0.01uF	50V	B	
C 2053	K22170235	CHIP CAP.	GRM40CH101J50PT	100pF	50V	CH	
C 2054	K22170817	CHIP CAP.	GRM40B103M50PT	0.01uF	50V	B	
C 2055	K46170018	AL. ELECTRO. CAP.	50V2R2M5X11TR5	2.2uF	50V		
C 2056	K22141809	CHIP CAP.	GRM42-6B104M25PT	0.1uF	25V	B	
C 2057	K22170817	CHIP CAP.	GRM40B103M50PT	0.01uF	50V	B	
C 2058	K22170805	CHIP CAP.	GRM40B102M50PT	0.001uF	50V	B	
C 2059	K22170805	CHIP CAP.	GRM40B102M50PT	0.001uF	50V	B	
C 2060	K22170817	CHIP CAP.	GRM40B103M50PT	0.01uF	50V	B	
C 2061	K46170017	AL. ELECTRO. CAP.	50V010M5X11TR5	1uF	50V		
C 2062	K46170017	AL. ELECTRO. CAP.	50V010M5X11TR5	1uF	50V		
C 2063	K22170237	CHIP CAP.	GRM40CH121J50PT	120pF	50V	CH	
C 2064	K22141809	CHIP CAP.	GRM42-6B104M25PT	0.1uF	25V	B	
C 2065	K22141809	CHIP CAP.	GRM42-6B104M25PT	0.1uF	25V	B	
C 2066	K22170235	CHIP CAP.	GRM40CH101J50PT	100pF	50V	CH	
C 2067	K22141809	CHIP CAP.	GRM42-6B104M25PT	0.1uF	25V	B	
C 2068	K46170021	AL. ELECTRO. CAP.	50V100M5X11TR5	10uF	50V		
C 2069	K22170817	CHIP CAP.	GRM40B103M50PT	0.01uF	50V	B	
C 2070	K22170817	CHIP CAP.	GRM40B103M50PT	0.01uF	50V	B	
C 2071	K22170817	CHIP CAP.	GRM40B103M50PT	0.01uF	50V	B	
C 2072	K22170817	CHIP CAP.	GRM40B103M50PT	0.01uF	50V	B	
C 2073	K22170817	CHIP CAP.	GRM40B103M50PT	0.01uF	50V	B	
C 2074	K22170817	CHIP CAP.	GRM40B103M50PT	0.01uF	50V	B	
C 2075	K22170817	CHIP CAP.	GRM40B103M50PT	0.01uF	50V	B	
C 2076	K22170817	CHIP CAP.	GRM40B103M50PT	0.01uF	50V	B	
C 2077	K22170817	CHIP CAP.	GRM40B103M50PT	0.01uF	50V	B	
C 2078	K22170817	CHIP CAP.	GRM40B103M50PT	0.01uF	50V	B	
C 2079	K22170817	CHIP CAP.	GRM40B103M50PT	0.01uF	50V	B	
C 2080	K22170817	CHIP CAP.	GRM40B103M50PT	0.01uF	50V	B	
C 2081	K22170817	CHIP CAP.	GRM40B103M50PT	0.01uF	50V	B	
C 2082	K22170817	CHIP CAP.	GRM40B103M50PT	0.01uF	50V	B	
C 2083	K22170817	CHIP CAP.	GRM40B103M50PT	0.01uF	50V	B	
C 2084	K22170817	CHIP CAP.	GRM40B103M50PT	0.01uF	50V	B	
C 2085	K22171008	CHIP CAP.	GRM40F473Z50PT	0.047uF	50V	F	
C 2086	K22171008	CHIP CAP.	GRM40F473Z50PT	0.047uF	50V	F	
C 2087	K22171008	CHIP CAP.	GRM40F473Z50PT	0.047uF	50V	F	
C 2088	K22171008	CHIP CAP.	GRM40F473Z50PT	0.047uF	50V	F	
C 2089	K22170817	CHIP CAP.	GRM40B103M50PT	0.01uF	50V	B	
C 2090	K22170817	CHIP CAP.	GRM40B103M50PT	0.01uF	50V	B	
C 2091	K22170817	CHIP CAP.	GRM40B103M50PT	0.01uF	50V	B	
C 2092	K22170219	CHIP CAP.	GRM40CH220J50PT	22pF	50V	CH	
C 2093	K22170817	CHIP CAP.	GRM40B103M50PT	0.01uF	50V	B	
C 2094	K22170817	CHIP CAP.	GRM40B103M50PT	0.01uF	50V	B	
C 2095	K22171008	CHIP CAP.	GRM40F473Z50PT	0.047uF	50V	F	
C 2096	K22170817	CHIP CAP.	GRM40B103M50PT	0.01uF	50V	B	
C 2097	K22171008	CHIP CAP.	GRM40F473Z50PT	0.047uF	50V	F	
C 2098	K70147155	TANTALUM CAP.	DN1E1R5M1S	1.5	25V		
C 2099	K46170021	AL. ELECTRO. CAP.	50V100M5X11TR5	10uF	50V		
C 2100	K46170021	AL. ELECTRO. CAP.	50V100M5X11TR5	10uF	50V		
C 2101	K46170017	AL. ELECTRO. CAP.	50V010M5X11TR5	1uF	50V		
C 2102	K22141809	CHIP CAP.	GRM42-6B104M25PT	0.1uF	25V	B	

REF.	YAESU P/N	DESCRIPTION	MFGR'S DESIG	VALUE	WV	TOL.	VERS.
C 2103	K46170014	AL. ELECTRO. CAP.	50VR22M5X11TR5	0.22uF	50V		
C 2104	K46170021	AL. ELECTRO. CAP.	50V100M5X11TR5	10uF	50V		
C 2105	K22171008	CHIP CAP.	GRM40F473Z50PT	0.047uF	50V	F	
C 2106	K22170243	CHIP CAP.	GRM40CH221J50PT	220pF	50V	CH	
C 2107	K22170235	CHIP CAP.	GRM40CH101J50PT	100pF	50V	CH	
C 2108	K22170805	CHIP CAP.	GRM40B102M50PT	0.001uF	50V	B	
C 2109	K22171008	CHIP CAP.	GRM40F473Z50PT	0.047uF	50V	F	
C 2110	K46170021	AL. ELECTRO. CAP.	50V100M5X11TR5	10uF	50V		
C 2111	K22170805	CHIP CAP.	GRM40B102M50PT	0.001uF	50V	B	
C 2112	K46170017	AL. ELECTRO. CAP.	50V010M5X11TR5	1uF	50V		
C 2113	K22171008	CHIP CAP.	GRM40F473Z50PT	0.047uF	50V	F	
C 2114	K22171008	CHIP CAP.	GRM40F473Z50PT	0.047uF	50V	F	
C 2115	K22171008	CHIP CAP.	GRM40F473Z50PT	0.047uF	50V	F	
C 2116	K22171008	CHIP CAP.	GRM40F473Z50PT	0.047uF	50V	F	
C 2117	K22171008	CHIP CAP.	GRM40F473Z50PT	0.047uF	50V	F	
C 2118	K22170817	CHIP CAP.	GRM40B103M50PT	0.01uF	50V	B	
C 2119	K22171008	CHIP CAP.	GRM40F473Z50PT	0.047uF	50V	F	
C 2120	K22170817	CHIP CAP.	GRM40B103M50PT	0.01uF	50V	B	
C 2121	K22171008	CHIP CAP.	GRM40F473Z50PT	0.047uF	50V	F	
C 2122	K22171008	CHIP CAP.	GRM40F473Z50PT	0.047uF	50V	F	
C 2123	K22170805	CHIP CAP.	GRM40B102M50PT	0.001uF	50V	B	
C 2124	K22171008	CHIP CAP.	GRM40F473Z50PT	0.047uF	50V	F	
C 2125	K22171008	CHIP CAP.	GRM40F473Z50PT	0.047uF	50V	F	
C 2126	K22170805	CHIP CAP.	GRM40B102M50PT	0.001uF	50V	B	
C 2127	K22171008	CHIP CAP.	GRM40F473Z50PT	0.047uF	50V	F	
C 2128	K22141809	CHIP CAP.	GRM42-6B104M25PT	0.1uF	25V	B	
C 2129	K51176102	STYROL CAP.	50S2U102K	0.001	50V		
C 2130	K51176102	STYROL CAP.	50S2U102K	0.001	50V		
C 2131	K22170817	CHIP CAP.	GRM40B103M50PT	0.01uF	50V	B	
C 2132	K22171008	CHIP CAP.	GRM40F473Z50PT	0.047uF	50V	F	
C 2133	K22170817	CHIP CAP.	GRM40B103M50PT	0.01uF	50V	B	
C 2134	K22171008	CHIP CAP.	GRM40F473Z50PT	0.047uF	50V	F	
C 2135	K22171008	CHIP CAP.	GRM40F473Z50PT	0.047uF	50V	F	
C 2136	K22171008	CHIP CAP.	GRM40F473Z50PT	0.047uF	50V	F	
C 2137	K22171008	CHIP CAP.	GRM40F473Z50PT	0.047uF	50V	F	
C 2138	K22170817	CHIP CAP.	GRM40B103M50PT	0.01uF	50V	B	
C 2139	K22171008	CHIP CAP.	GRM40F473Z50PT	0.047uF	50V	F	
C 2140	K22170235	CHIP CAP.	GRM40CH101J50PT	100pF	50V	CH	
C 2141	K22171008	CHIP CAP.	GRM40F473Z50PT	0.047uF	50V	F	
C 2142	K22171008	CHIP CAP.	GRM40F473Z50PT	0.047uF	50V	F	
C 2143	K22170817	CHIP CAP.	GRM40B103M50PT	0.01uF	50V	B	
C 2144	K22170817	CHIP CAP.	GRM40B103M50PT	0.01uF	50V	B	
C 2145	K22171008	CHIP CAP.	GRM40F473Z50PT	0.047uF	50V	F	
C 2146	K22171008	CHIP CAP.	GRM40F473Z50PT	0.047uF	50V	F	
C 2147	K22171008	CHIP CAP.	GRM40F473Z50PT	0.047uF	50V	F	
C 2148	K22170817	CHIP CAP.	GRM40B103M50PT	0.01uF	50V	B	
C 2149	K22171008	CHIP CAP.	GRM40F473Z50PT	0.047uF	50V	F	
C 2150	K22171008	CHIP CAP.	GRM40F473Z50PT	0.047uF	50V	F	
C 2151	K22171008	CHIP CAP.	GRM40F473Z50PT	0.047uF	50V	F	
C 2152	K22171008	CHIP CAP.	GRM40F473Z50PT	0.047uF	50V	F	
C 2153	K22171008	CHIP CAP.	GRM40F473Z50PT	0.047uF	50V	F	
C 2154	K22170235	CHIP CAP.	GRM40CH101J50PT	100pF	50V	CH	
C 2155	K22171008	CHIP CAP.	GRM40F473Z50PT	0.047uF	50V	F	
C 2156	K22170817	CHIP CAP.	GRM40B103M50PT	0.01uF	50V	B	
C 2157	K22171008	CHIP CAP.	GRM40F473Z50PT	0.047uF	50V	F	

IF Unit

REF.	YAESU P/N	DESCRIPTION	MFGR'S DESIG	VALUE	WV	TOL.	VERS.
C 2158	K22170817	CHIP CAP.	GRM40B103M50PT	0.01uF	50V	B	
C 2159	K46170016	AL. ELECTRO. CAP.	50VR47M5X11TR5	0.47uF	50V		
C 2160	K46170021	AL. ELECTRO. CAP.	50V100M5X11TR5	10uF	50V		
C 2161	K46170021	AL. ELECTRO. CAP.	50V100M5X11TR5	10uF	50V		
C 2162	K22171008	CHIP CAP.	GRM40F473Z50PT	0.047uF	50V	F	
C 2163	K22171008	CHIP CAP.	GRM40F473Z50PT	0.047uF	50V	F	
C 2164	K22171008	CHIP CAP.	GRM40F473Z50PT	0.047uF	50V	F	
C 2165	K22171008	CHIP CAP.	GRM40F473Z50PT	0.047uF	50V	F	
C 2166	K22171008	CHIP CAP.	GRM40F473Z50PT	0.047uF	50V	F	
C 2167	K22170817	CHIP CAP.	GRM40B103M50PT	0.01uF	50V	B	
C 2168	K22170307	CHIP CAP.	GRM40UJ060D50PT	6pF	50V	UJ	
CD2001	H7900180	CERAMIC DISC	CDB455C7				
CF2001	H3900387	CERAMIC FILTER	LF-H8S				
CF2002	H3900377	CERAMIC FILTER	LF-H6SC				
CF2003	H3900290	CERAMIC FILTER	CFJ-455K13				
D 2001	G2060011	DIODE	1SS198TJ				
D 2002	G2060011	DIODE	1SS198TJ				
D 2005	G2060004	DIODE	1SS270TJ				
D 2006	G2060004	DIODE	1SS270TJ				
D 2007	G2060004	DIODE	1SS270TJ				
D 2008	G2060004	DIODE	1SS270TJ				
D 2009	G2060004	DIODE	1SS270TJ				
D 2010	G2090180	DIODE	FC-53M-5				
D 2011	G9090007	VARISTOR	MV-12 (KB265)				
D 2012	G2060011	DIODE	1SS198TJ				
D 2013	G2060011	DIODE	1SS198TJ				
D 2014	G2090272	DIODE	HZ9A2				
D 2015	G2060004	DIODE	1SS270TJ				
D 2016	G2060004	DIODE	1SS270TJ				
D 2017	G2060004	DIODE	1SS270TJ				
D 2018	G2090384	DIODE	HZ7C2				
D 2019	G2060004	DIODE	1SS270TJ				
D 2020	G2060007	DIODE	1SS205-T1				
D 2021	G2060004	DIODE	1SS270TJ				
D 2022	G2060004	DIODE	1SS270TJ				
D 2023	G2060007	DIODE	1SS205-T1				
D 2024	G2060004	DIODE	1SS270TJ				
D 2025	G2060004	DIODE	1SS270TJ				
D 2026	G2060004	DIODE	1SS270TJ				
D 2027	G2060004	DIODE	1SS270TJ				
D 2028	G2060004	DIODE	1SS270TJ				
D 2029	G2060007	DIODE	1SS205-T1				
D 2030	G2060004	DIODE	1SS270TJ				
D 2031	G2060004	DIODE	1SS270TJ				
D 2032	G2060004	DIODE	1SS270TJ				
D 2033	G2060004	DIODE	1SS270TJ				
D 2034	G2090305	DIODE	HZ5B3				
D 2035	G2060004	DIODE	1SS270TJ				
D 2036	G2060004	DIODE	1SS270TJ				
D 2037	G2060004	DIODE	1SS270TJ				
D 2038	G2060011	DIODE	1SS198TJ				
D 2039	G2060011	DIODE	1SS198TJ				

REF.	YAESU P/N	DESCRIPTION	MFGR'S DESIG	VALUE	WV	TOL.	VERS.
D 2040	G2060011	DIODE	1SS198TJ				
D 2041	G2060011	DIODE	1SS198TJ				
D 2042	G2060004	DIODE	1SS270TJ				
D 2043	G2060004	DIODE	1SS270TJ				
D 2044	G2060004	DIODE	1SS270TJ				
D 2045	G2060004	DIODE	1SS270TJ				
D 2046	G2060004	DIODE	1SS270TJ				
D 2047	G2060004	DIODE	1SS270TJ				
D 2048	G2060004	DIODE	1SS270TJ				
D 2049	G2060004	DIODE	1SS270TJ				
D 2050	G2090180	DIODE	FC-53M-5				
D 2051	G2060004	DIODE	1SS270TJ				
D 2052	G2090155	DIODE	RD9.1EB2				
D 2053	G2060004	DIODE	1SS270TJ				
D 2054	G2060004	DIODE	1SS270TJ				
D 2055	G2060004	DIODE	1SS270TJ				
D 2056	G2060004	DIODE	1SS270TJ				
D 2057	G2060004	DIODE	1SS270TJ				
D 2058	G2090118	DIODE	1SS97				
D 2059	G2090118	DIODE	1SS97				
D 2060	G2060004	DIODE	1SS270TJ				
J 2001	P1090255	CONNECTOR	TMP-J01X-A2				
J 2002	P0090741	CONNECTOR	EC1C-22P-2.5DSA				
J 2003	P0090741	CONNECTOR	EC1C-22P-2.5DSA				
JP2009	T9206063	WIRE-ASSY					
JP2011	T9206064A	WIRE-ASSY					
L 2001	L1790164	M.RFC	LAL03VB102K	1mH			
L 2002	L0022108	COIL	18.0U R12-L282X				
L 2003	L1790070	M.RFC	LAP02TA101K	100uH			
L 2004	L1790070	M.RFC	LAP02TA101K	100uH			
L 2005	L1790070	M.RFC	LAP02TA101K	100uH			
L 2006	L1790070	M.RFC	LAP02TA101K	100uH			
L 2007	L1790070	M.RFC	LAP02TA101K	100uH			
L 2008	L1790070	M.RFC	LAP02TA101K	100uH			
L 2009	L1790074	M.RFC	LAP02TA221K	220uH			
L 2010	L0021610	COIL	455K R12-E453A				
L 2011	L1790164	M.RFC	LAL03VB102K	1mH			
L 2012	L1790164	M.RFC	LAL03VB102K	1mH			
L 2013	L1790164	M.RFC	LAL03VB102K	1mH			
L 2014	L1790164	M.RFC	LAL03VB102K	1mH			
Q 2001	G4801317B	FET	3SK131-T2B V12				
Q 2002	G4801317B	FET	3SK131-T2B V12				
Q 2003	G3327127G	TRANSISTOR	2SC2712GR TE85R				
Q 2004	G3327127G	TRANSISTOR	2SC2712GR TE85R				
Q 2005	G3803027G	FET	2SK302GR TE85R				
Q 2006	G3803027G	FET	2SK302GR TE85R				
Q 2007	G3326207B	TRANSISTOR	2SC2620QBTR				
Q 2008	G3327127G	TRANSISTOR	2SC2712GR TE85R				
Q 2009	G3327127G	TRANSISTOR	2SC2712GR TE85R				
Q 2010	G3070006	TRANSISTOR	FA1A4P-T2B				
Q 2011	G3803027G	FET	2SK302GR TE85R				

IF Unit

REF.	YAESU P/N	DESCRIPTION	MFGR'S DESIG	VALUE	WV	TOL.	VERS.
Q 2012	G3803027G	FET	2SK302GR TE85R				
Q 2013	G4801797L	FET	3SK179-T2 V02				
Q 2014	G3803027G	FET	2SK302GR TE85R				
Q 2015	G3070006	TRANSISTOR	FA1A4P-T2B				
Q 2016	G3070006	TRANSISTOR	FA1A4P-T2B				
Q 2017	G1090145	IC	MC3357P				
Q 2018	G3070006	TRANSISTOR	FA1A4P-T2B				
Q 2019	G1090101	IC	UPC1037H				
Q 2020	G3327127G	TRANSISTOR	2SC2712GR TE85R				
Q 2021	G1090101	IC	UPC1037H				
Q 2022	G1091140	IC	M5218AL				
Q 2023	G3801607F	FET	2SK160-T2B K6				
Q 2024	G1091140	IC	M5218AL				
Q 2025	G3327127G	TRANSISTOR	2SC2712GR TE85R				
Q 2026	G3070006	TRANSISTOR	FA1A4P-T2B				
Q 2027	G3327127G	TRANSISTOR	2SC2712GR TE85R				
Q 2028	G3070006	TRANSISTOR	FA1A4P-T2B				
Q 2029	G3327127G	TRANSISTOR	2SC2712GR TE85R				
Q 2030	G3327127G	TRANSISTOR	2SC2712GR TE85R				
Q 2031	G3327127G	TRANSISTOR	2SC2712GR TE85R				
Q 2032	G4801317B	FET	3SK131-T2B V12				
Q 2033	G4801317B	FET	3SK131-T2B V12				
Q 2034	G3802107G	FET	2SK210GR TE85R				
Q 2035	G3111627G	TRANSISTOR	2SA1162GR TE85R				
Q 2036	G1090413	IC	TA7302P				
Q 2037	G4801317B	FET	3SK131-T2B V12				
Q 2038	G3801607F	FET	2SK160-T2B K6				
Q 2039	G1091140	IC	M5218AL				
R 2001	J24205102	CHIP RES.	RMC1/10T 102J	1K	1/10W		
R 2002	J24205104	CHIP RES.	RMC1/10T 104J	100K	1/10W		
R 2003	J24205331	CHIP RES.	RMC1/10T 331J	330	1/10W		
R 2005	J24205101	CHIP RES.	RMC1/10T 101J	100	1/10W		
R 2006	J24205102	CHIP RES.	RMC1/10T 102J	1K	1/10W		
R 2007	J24205103	CHIP RES.	RMC1/10T 103J	10K	1/10W		
R 2008	J24205221	CHIP RES.	RMC1/10T 221J	220	1/10W		
R 2009	J24205103	CHIP RES.	RMC1/10T 103J	10K	1/10W		
R 2010	J24205101	CHIP RES.	RMC1/10T 101J	100	1/10W		
R 2011	J24205103	CHIP RES.	RMC1/10T 103J	10K	1/10W		
R 2012	J24205104	CHIP RES.	RMC1/10T 104J	100K	1/10W		
R 2013	J24205103	CHIP RES.	RMC1/10T 103J	10K	1/10W		
R 2014	J24205472	CHIP RES.	RMC1/10T 472J	4.7K	1/10W		
R 2015	J24205473	CHIP RES.	RMC1/10T 473J	47K	1/10W		
R 2016	J24205472	CHIP RES.	RMC1/10T 472J	4.7K	1/10W		
R 2017	J24205471	CHIP RES.	RMC1/10T 471J	470	1/10W		
R 2018	J24205471	CHIP RES.	RMC1/10T 471J	470	1/10W		
R 2019	J24205123	CHIP RES.	RMC1/10T 123J	12K	1/10W		
R 2020	J24205103	CHIP RES.	RMC1/10T 103J	10K	1/10W		
R 2021	J24205153	CHIP RES.	RMC1/10T 153J	15K	1/10W		
R 2022	J24205101	CHIP RES.	RMC1/10T 101J	100	1/10W		
R 2023	J24205103	CHIP RES.	RMC1/10T 103J	10K	1/10W		
R 2024	J24205472	CHIP RES.	RMC1/10T 472J	4.7K	1/10W		
R 2025	J24205472	CHIP RES.	RMC1/10T 472J	4.7K	1/10W		
R 2026	J24205222	CHIP RES.	RMC1/10T 222J	2.2K	1/10W		
R 2027	J24205103	CHIP RES.	RMC1/10T 103J	10K	1/10W		

REF.	YAESU P/N	DESCRIPTION	MFGR'S DESIG	VALUE	WV	TOL.	VERS.
R 2028	J24205103	CHIP RES.	RMC1/10T 103J	10K	1/10W		
R 2029	J24205221	CHIP RES.	RMC1/10T 221J	220	1/10W		
R 2030	J24205472	CHIP RES.	RMC1/10T 472J	4.7K	1/10W		
R 2031	J24205104	CHIP RES.	RMC1/10T 104J	100K	1/10W		
R 2032	J24205223	CHIP RES.	RMC1/10T 223J	22K	1/10W		
R 2033	J24205152	CHIP RES.	RMC1/10T 152J	1.5K	1/10W		
R 2034	J24205104	CHIP RES.	RMC1/10T 104J	100K	1/10W		
R 2035	J24205333	CHIP RES.	RMC1/10T 333J	33K	1/10W		
R 2036	J24205103	CHIP RES.	RMC1/10T 103J	10K	1/10W		
R 2037	J24205102	CHIP RES.	RMC1/10T 102J	1K	1/10W		
R 2038	J24205221	CHIP RES.	RMC1/10T 221J	220	1/10W		
R 2039	J24205471	CHIP RES.	RMC1/10T 471J	470	1/10W		
R 2040	J24205332	CHIP RES.	RMC1/10T 332J	3.3K	1/10W		
R 2041	J24205103	CHIP RES.	RMC1/10T 103J	10K	1/10W		
R 2042	J24205153	CHIP RES.	RMC1/10T 153J	15K	1/10W		
R 2043	J24205221	CHIP RES.	RMC1/10T 221J	220	1/10W		
R 2044	J24205103	CHIP RES.	RMC1/10T 103J	10K	1/10W		
R 2045	J07225221	CARBON FILM RES.	RD16TPJ221 220	220	1/6W		
R 2046	J24205103	CHIP RES.	RMC1/10T 103J	10K	1/10W		
R 2047	J24205101	CHIP RES.	RMC1/10T 101J	100	1/10W		
R 2048	J24205102	CHIP RES.	RMC1/10T 102J	1K	1/10W		
R 2049	J24205102	CHIP RES.	RMC1/10T 102J	1K	1/10W		
R 2050	J24205103	CHIP RES.	RMC1/10T 103J	10K	1/10W		
R 2051	J24205101	CHIP RES.	RMC1/10T 101J	100	1/10W		
R 2052	J24205103	CHIP RES.	RMC1/10T 103J	10K	1/10W		
R 2053	J24205151	CHIP RES.	RMC1/10T 151J	150	1/10W		
R 2054	J24205101	CHIP RES.	RMC1/10T 101J	100	1/10W		
R 2055	J24205681	CHIP RES.	RMC1/10T 681J	680	1/10W		
R 2056	J24205392	CHIP RES.	RMC1/10T 392J	3.9K	1/10W		
R 2057	J24205472	CHIP RES.	RMC1/10T 472J	4.7K	1/10W		
R 2058	J24205101	CHIP RES.	RMC1/10T 101J	100	1/10W		
R 2059	J24205104	CHIP RES.	RMC1/10T 104J	100K	1/10W		
R 2060	J24205102	CHIP RES.	RMC1/10T 102J	1K	1/10W		
R 2061	J24205101	CHIP RES.	RMC1/10T 101J	100	1/10W		
R 2062	J24205102	CHIP RES.	RMC1/10T 102J	1K	1/10W		
R 2063	J24205472	CHIP RES.	RMC1/10T 472J	4.7K	1/10W		
R 2064	J24205821	CHIP RES.	RMC1/10T 821J	820	1/10W		
R 2066	J24205334	CHIP RES.	RMC1/10T 334J	330K	1/10W		
R 2067	J24205153	CHIP RES.	RMC1/10T 153J	15K	1/10W		
R 2068	J24205152	CHIP RES.	RMC1/10T 152J	1.5K	1/10W		
R 2069	J24205822	CHIP RES.	RMC1/10T 822J	8.2K	1/10W		
R 2070	J24205152	CHIP RES.	RMC1/10T 152J	1.5K	1/10W		
R 2071	J24205473	CHIP RES.	RMC1/10T 473J	47K	1/10W		
R 2072	J24205222	CHIP RES.	RMC1/10T 222J	2.2K	1/10W		
R 2073	J24205222	CHIP RES.	RMC1/10T 222J	2.2K	1/10W		
R 2074	J24205471	CHIP RES.	RMC1/10T 471J	470	1/10W		
R 2075	J24205154	CHIP RES.	RMC1/10T 154J	150K	1/10W		
R 2076	J07225221	CARBON FILM RES.	RD16TPJ221 220	220	1/6W		
R 2077	J24205101	CHIP RES.	RMC1/10T 101J	100	1/10W		
R 2078	J24205820	CHIP RES.	RMC1/10T 820J	82	1/10W		
R 2079	J24205152	CHIP RES.	RMC1/10T 152J	1.5K	1/10W		
R 2080	J24205820	CHIP RES.	RMC1/10T 820J	82	1/10W		
R 2081	J24205101	CHIP RES.	RMC1/10T 101J	100	1/10W		
R 2082	J24205101	CHIP RES.	RMC1/10T 101J	100	1/10W		
R 2083	J24205560	CHIP RES.	RMC1/10T 560J	56	1/10W		

REF.	YAESU P/N	DESCRIPTION	MFGR'S DESIG	VALUE	WV	TOL.	VERS.
R 2084	J24205222	CHIP RES.	RMC1/10T 222J	2.2K	1/10W		
R 2085	J24205560	CHIP RES.	RMC1/10T 560J	56	1/10W		
R 2086	J24205101	CHIP RES.	RMC1/10T 101J	100	1/10W		
R 2087	J24205101	CHIP RES.	RMC1/10T 101J	100	1/10W		
R 2088	J24205101	CHIP RES.	RMC1/10T 101J	100	1/10W		
R 2089	J24205102	CHIP RES.	RMC1/10T 102J	1K	1/10W		
R 2090	J24205102	CHIP RES.	RMC1/10T 102J	1K	1/10W		
R 2091	J24205392	CHIP RES.	RMC1/10T 392J	3.9K	1/10W		
R 2092	J24205102	CHIP RES.	RMC1/10T 102J	1K	1/10W		
R 2093	J24205101	CHIP RES.	RMC1/10T 101J	100	1/10W		
R 2094	J24205101	CHIP RES.	RMC1/10T 101J	100	1/10W		
R 2095	J24205472	CHIP RES.	RMC1/10T 472J	4.7K	1/10W		
R 2096	J24205391	CHIP RES.	RMC1/10T 391J	390	1/10W		
R 2097	J24205332	CHIP RES.	RMC1/10T 332J	3.3K	1/10W		
R 2098	J24205221	CHIP RES.	RMC1/10T 221J	220	1/10W		
R 2099	J24205223	CHIP RES.	RMC1/10T 223J	22K	1/10W		
R 2100	J24205103	CHIP RES.	RMC1/10T 103J	10K	1/10W		
R 2101	J24205332	CHIP RES.	RMC1/10T 332J	3.3K	1/10W		
R 2102	J24205560	CHIP RES.	RMC1/10T 560J	56	1/10W		
R 2103	J24205472	CHIP RES.	RMC1/10T 472J	4.7K	1/10W		
R 2104	J24205273	CHIP RES.	RMC1/10T 273J	27K	1/10W		
R 2105	J24205391	CHIP RES.	RMC1/10T 391J	390	1/10W		
R 2106	J24205103	CHIP RES.	RMC1/10T 103J	10K	1/10W		
R 2107	J24205473	CHIP RES.	RMC1/10T 473J	47K	1/10W		
R 2108	J24205473	CHIP RES.	RMC1/10T 473J	47K	1/10W		
R 2109	J24205102	CHIP RES.	RMC1/10T 102J	1K	1/10W		
R 2110	J24205472	CHIP RES.	RMC1/10T 472J	4.7K	1/10W		
R 2111	J24205102	CHIP RES.	RMC1/10T 102J	1K	1/10W		
R 2112	J24205102	CHIP RES.	RMC1/10T 102J	1K	1/10W		
R 2113	J24205392	CHIP RES.	RMC1/10T 392J	3.9K	1/10W		
R 2114	J24205101	CHIP RES.	RMC1/10T 101J	100	1/10W		
R 2115	J24205104	CHIP RES.	RMC1/10T 104J	100K	1/10W		
R 2116	J24205473	CHIP RES.	RMC1/10T 473J	47K	1/10W		
R 2117	J24205473	CHIP RES.	RMC1/10T 473J	47K	1/10W		
R 2118	J24205154	CHIP RES.	RMC1/10T 154J	150K	1/10W		
R 2119	J24205154	CHIP RES.	RMC1/10T 154J	150K	1/10W		
R 2120	J24205222	CHIP RES.	RMC1/10T 222J	2.2K	1/10W		
R 2121	J24205472	CHIP RES.	RMC1/10T 472J	4.7K	1/10W		
R 2122	J24205103	CHIP RES.	RMC1/10T 103J	10K	1/10W		
R 2123	J24205155	CHIP RES.	RMC1/10T 155J	1.5M	1/10W		
R 2124	J24205473	CHIP RES.	RMC1/10T 473J	47K	1/10W		
R 2125	J24205223	CHIP RES.	RMC1/10T 223J	22K	1/10W		
R 2126	J24205101	CHIP RES.	RMC1/10T 101J	100	1/10W		
R 2127	J24205154	CHIP RES.	RMC1/10T 154J	150K	1/10W		
R 2128	J24205103	CHIP RES.	RMC1/10T 103J	10K	1/10W		
R 2129	J24205102	CHIP RES.	RMC1/10T 102J	1K	1/10W		
R 2130	J24205104	CHIP RES.	RMC1/10T 104J	100K	1/10W		
R 2131	J24205105	CHIP RES.	RMC1/10T 105J	1M	1/10W		
R 2132	J24205472	CHIP RES.	RMC1/10T 472J	4.7K	1/10W		
R 2133	J24205101	CHIP RES.	RMC1/10T 101J	100	1/10W		
R 2134	J24205472	CHIP RES.	RMC1/10T 472J	4.7K	1/10W		
R 2135	J24205101	CHIP RES.	RMC1/10T 101J	100	1/10W		
R 2136	J24205472	CHIP RES.	RMC1/10T 472J	4.7K	1/10W		
R 2137	J24205101	CHIP RES.	RMC1/10T 101J	100	1/10W		
R 2138	J24205472	CHIP RES.	RMC1/10T 472J	4.7K	1/10W		

REF.	YAESU P/N	DESCRIPTION	MFGR'S DESIG	VALUE	WV	TOL.	VERS.
R 2139	J24205101	CHIP RES.	RMC1/10T 101J	100	1/10W		
R 2140	J24205472	CHIP RES.	RMC1/10T 472J	4.7K	1/10W		
R 2141	J24205101	CHIP RES.	RMC1/10T 101J	100	1/10W		
R 2142	J24205472	CHIP RES.	RMC1/10T 472J	4.7K	1/10W		
R 2143	J24205101	CHIP RES.	RMC1/10T 101J	100	1/10W		
R 2144	J24205332	CHIP RES.	RMC1/10T 332J	3.3K	1/10W		
R 2145	J24205334	CHIP RES.	RMC1/10T 334J	330K	1/10W		
R 2146	J24205334	CHIP RES.	RMC1/10T 334J	330K	1/10W		
R 2147	J24205102	CHIP RES.	RMC1/10T 102J	1K	1/10W		
R 2148	J24205102	CHIP RES.	RMC1/10T 102J	1K	1/10W		
R 2149	J24205103	CHIP RES.	RMC1/10T 103J	10K	1/10W		
R 2150	J24205104	CHIP RES.	RMC1/10T 104J	100K	1/10W		
R 2151	J24205472	CHIP RES.	RMC1/10T 472J	4.7K	1/10W		
R 2152	J24205102	CHIP RES.	RMC1/10T 102J	1K	1/10W		
R 2153	J24205104	CHIP RES.	RMC1/10T 104J	100K	1/10W		
R 2154	J24205103	CHIP RES.	RMC1/10T 103J	10K	1/10W		
R 2155	J24205101	CHIP RES.	RMC1/10T 101J	100	1/10W		
R 2156	J24205104	CHIP RES.	RMC1/10T 104J	100K	1/10W		
R 2157	J24205104	CHIP RES.	RMC1/10T 104J	100K	1/10W		
R 2158	J24205102	CHIP RES.	RMC1/10T 102J	1K	1/10W		
R 2159	J24205104	CHIP RES.	RMC1/10T 104J	100K	1/10W		
R 2160	J24205683	CHIP RES.	RMC1/10T 683J	68K	1/10W		
R 2161	J24205101	CHIP RES.	RMC1/10T 101J	100	1/10W		
R 2162	J24205151	CHIP RES.	RMC1/10T 151J	150	1/10W		
R 2163	J24205101	CHIP RES.	RMC1/10T 101J	100	1/10W		
R 2164	J24205101	CHIP RES.	RMC1/10T 101J	100	1/10W		
R 2165	J24205103	CHIP RES.	RMC1/10T 103J	10K	1/10W		
R 2166	J24205563	CHIP RES.	RMC1/10T 563J	56K	1/10W		
R 2167	J24205151	CHIP RES.	RMC1/10T 151J	150	1/10W		
R 2168	J24205101	CHIP RES.	RMC1/10T 101J	100	1/10W		
R 2169	J24205332	CHIP RES.	RMC1/10T 332J	3.3K	1/10W		
R 2170	J24205101	CHIP RES.	RMC1/10T 101J	100	1/10W		
R 2171	J24205104	CHIP RES.	RMC1/10T 104J	100K	1/10W		
R 2172	J24205221	CHIP RES.	RMC1/10T 221J	220	1/10W		
R 2173	J24205101	CHIP RES.	RMC1/10T 101J	100	1/10W		
R 2174	J24205681	CHIP RES.	RMC1/10T 681J	680	1/10W		
R 2175	J24205472	CHIP RES.	RMC1/10T 472J	4.7K	1/10W		
R 2176	J24205473	CHIP RES.	RMC1/10T 473J	47K	1/10W		
R 2177	J24205101	CHIP RES.	RMC1/10T 101J	100	1/10W		
R 2178	J24205472	CHIP RES.	RMC1/10T 472J	4.7K	1/10W		
R 2179	J24205101	CHIP RES.	RMC1/10T 101J	100	1/10W		
R 2180	J24205101	CHIP RES.	RMC1/10T 101J	100	1/10W		
R 2181	J24205472	CHIP RES.	RMC1/10T 472J	4.7K	1/10W		
R 2182	J24205101	CHIP RES.	RMC1/10T 101J	100	1/10W		
R 2183	J24205221	CHIP RES.	RMC1/10T 221J	220	1/10W		
R 2184	J24205563	CHIP RES.	RMC1/10T 563J	56K	1/10W		
R 2185	J24205103	CHIP RES.	RMC1/10T 103J	10K	1/10W		
R 2186	J24205101	CHIP RES.	RMC1/10T 101J	100	1/10W		
R 2187	J24205103	CHIP RES.	RMC1/10T 103J	10K	1/10W		
R 2188	J24205472	CHIP RES.	RMC1/10T 472J	4.7K	1/10W		
R 2189	J24205104	CHIP RES.	RMC1/10T 104J	100K	1/10W		
R 2190	J24205103	CHIP RES.	RMC1/10T 103J	10K	1/10W		
R 2191	J24205105	CHIP RES.	RMC1/10T 105J	1M	1/10W		
R 2192	J24205105	CHIP RES.	RMC1/10T 105J	1M	1/10W		
R 2193	J24205333	CHIP RES.	RMC1/10T 333J	33K	1/10W		

REF.	YAESU P/N	DESCRIPTION	MFGR'S DESIG	VALUE	WV	TOL.	VERS.
R 2194	J24205104	CHIP RES.	RMC1/10T 104J	100K	1/10W		
R 2195	J24205124	CHIP RES.	RMC1/10T 124J	120K	1/10W		
R 2196	J24205104	CHIP RES.	RMC1/10T 104J	100K	1/10W		
R 2197	J24205223	CHIP RES.	RMC1/10T 223J	22K	1/10W		
R 2198	J24205124	CHIP RES.	RMC1/10T 124J	120K	1/10W		
R 2199	J24205333	CHIP RES.	RMC1/10T 333J	33K	1/10W		
R 2200	J24205332	CHIP RES.	RMC1/10T 332J	3.3K	1/10W		
R 2201	J24205104	CHIP RES.	RMC1/10T 104J	100K	1/10W		
R 2202	J24205332	CHIP RES.	RMC1/10T 332J	3.3K	1/10W		
R 2203	J24205332	CHIP RES.	RMC1/10T 332J	3.3K	1/10W		
R 2204	J24205332	CHIP RES.	RMC1/10T 332J	3.3K	1/10W		
R 2205	J24205332	CHIP RES.	RMC1/10T 332J	3.3K	1/10W		
R 2206	J24205103	CHIP RES.	RMC1/10T 103J	10K	1/10W		
R 2207	J24205103	CHIP RES.	RMC1/10T 103J	10K	1/10W		
R 2208	J24205103	CHIP RES.	RMC1/10T 103J	10K	1/10W		
R 2209	J24205103	CHIP RES.	RMC1/10T 103J	10K	1/10W		
R 2210	J24205222	CHIP RES.	RMC1/10T 222J	2.2K	1/10W		
R 2211	J24205103	CHIP RES.	RMC1/10T 103J	10K	1/10W		
R 2213	J24205222	CHIP RES.	RMC1/10T 222J	2.2K	1/10W		
R 2214	J24205223	CHIP RES.	RMC1/10T 223J	22K	1/10W		
R 2216	J24205103	CHIP RES.	RMC1/10T 103J	10K	1/10W		
R 2217	J24205470	CHIP RES.	RMC1/10T 470J	47	1/10W		
T 2001	L0021541	COIL	10.7M				
T 2002	L0021162	COIL	10.7M R12-3909A				
T 2003	L0021482A	COIL	47.0M				
T 2004	L0020186B	COIL	10.7M 8X376049				
T 2005	L0021544	COIL	10.7M				
T 2006	L0021541	COIL	10.7M				
T 2007	L0021540	COIL	10.7M				
T 2008	L0021560	COIL	36.3M				
T 2009	L0021162	COIL	10.7M R12-3909A				
T 2010	L0021225	COIL	47.1M R12-6707A				
T 2011	L0021225	COIL	47.1M R12-6707A				
T 2012	L0021225	COIL	47.1M R12-6707A				
T 2013	L0020910A	COIL	10.7M				
T 2014	L0021541	COIL	10.7M				
T 2015	L0021544	COIL	10.7M				
T 2016	L0021541	COIL	10.7M				
T 2017	L0190002	COIL	455K				
T 2018	L0021162	COIL	10.7M R12-3909A				
T 2019	L0021541	COIL	10.7M				
T 2020	L0020421	COIL	R12-7935A				
T 2021	L0190002	COIL	455K				
T 2022	L0190002	COIL	455K				
T 2023	L0020420	COIL	R12-7943B				
T 2024	L0020421	COIL	R12-7935A				
T 2025	L0190002	COIL	455K				
TH2001	G9090016	THERMISTOR	112252-2				
TH2002	G9090008	THERMISTOR	112102-2				
TH2003	G9090039	THERMISTOR	112152-2				
TP2001	Q5000050	TP-K	IPS-1136				
TP2002	Q5000050	TP-K	IPS-1136				

REF.	YAESU P/N	DESCRIPTION	MFGR'S DESIG	VALUE	WV	TOL.	VERS.
TP2003	Q5000050	TP-K	IPS-1136				
VR2001	J51783502	POT.	EVN-DXAA03B53	5K			
VR2002	J50784202	POT.	EVN-DCAA03B23	2K			
VR2003	J50784103	POT.	EVN-DCAA03B14	10K			
VR2004	J50784103	POT.	EVN-DCAA03B14	10K			
VR2005	J50784103	POT.	EVN-DCAA03B14	10K			
VR2006	J50784103	POT.	EVN-DCAA03B14	10K			
VR2007	J50787502	POT.	PK502H502V0	5K			
VR2008	J50784102	POT.	EVN-DCAA03B13	1K			
VR2009	J50784102	POT.	EVN-DCAA03B13	1K			
VR2010	J50784503	POT.	EVN-DCAA03B54	50K			
VR2011	J50784103	POT.	EVN-DCAA03B14	10K			
X 2001	H0102985A	XTAL		10.94076MHz			
XF2001	H1102197	XTAL FILTER	10.9M2.6D				
XF2002	H1102192	XTAL FILTER	XF-10.9M-202-01				SSB-N
XF2003	H1102193	XTAL FILTER	XF-10.9M-501-01				CW-W
XF2004	H1102195	XTAL FILTER	10.9M10				
XF2005	H1102164	XTAL FILTER	XF-455K-251-01				CW-N
	R0137190	SHIELD CASE			5X2P		
	R0136960	FITTING R					
	R0136970	FITTING L					
	Q9000032	SPACER(2 pcs)					
	R7107410	FIBER					

Notes:

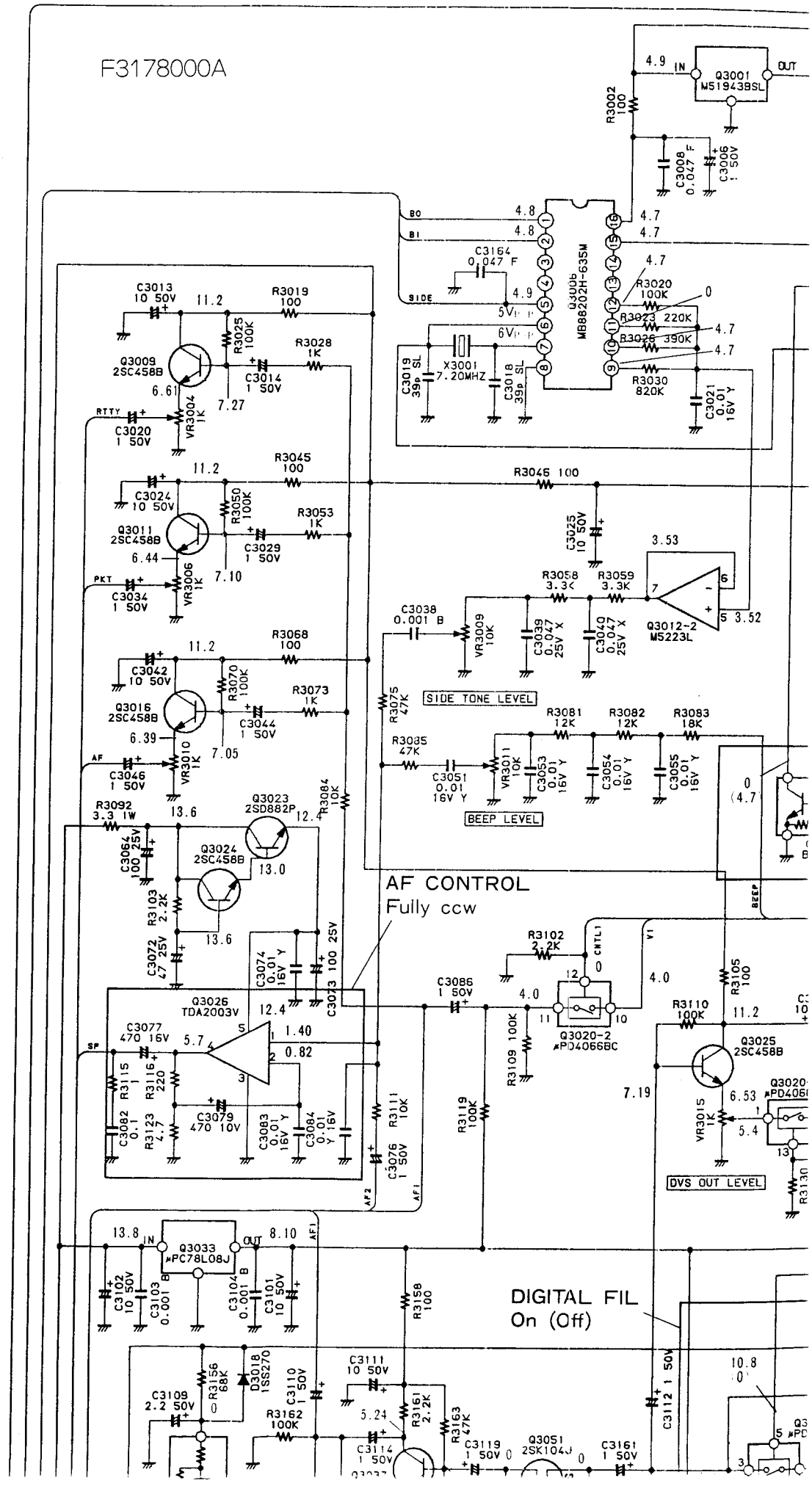
F3178000A
Q3001 M51943BSL
Q3006 MB88202H-635M
X3001 7.20MHZ
Q3009 2SC458B
Q3011 2SC458B
Q3016 2SC458B
Q3012-2 M5223L
SIDE TONE LEVEL
BEEP LEVEL
Q3023 2SD882P
Q3024 2SC458B
Q3026 TDA2003V
AF CONTROL
Fully ccw
Q3020-2 μPD4066BC
Q3025 2SC458B
DVS OUT LEVEL
Q3033 μPC78L08J
DIGITAL FIL
On (Off)
Q3051 2SK104J

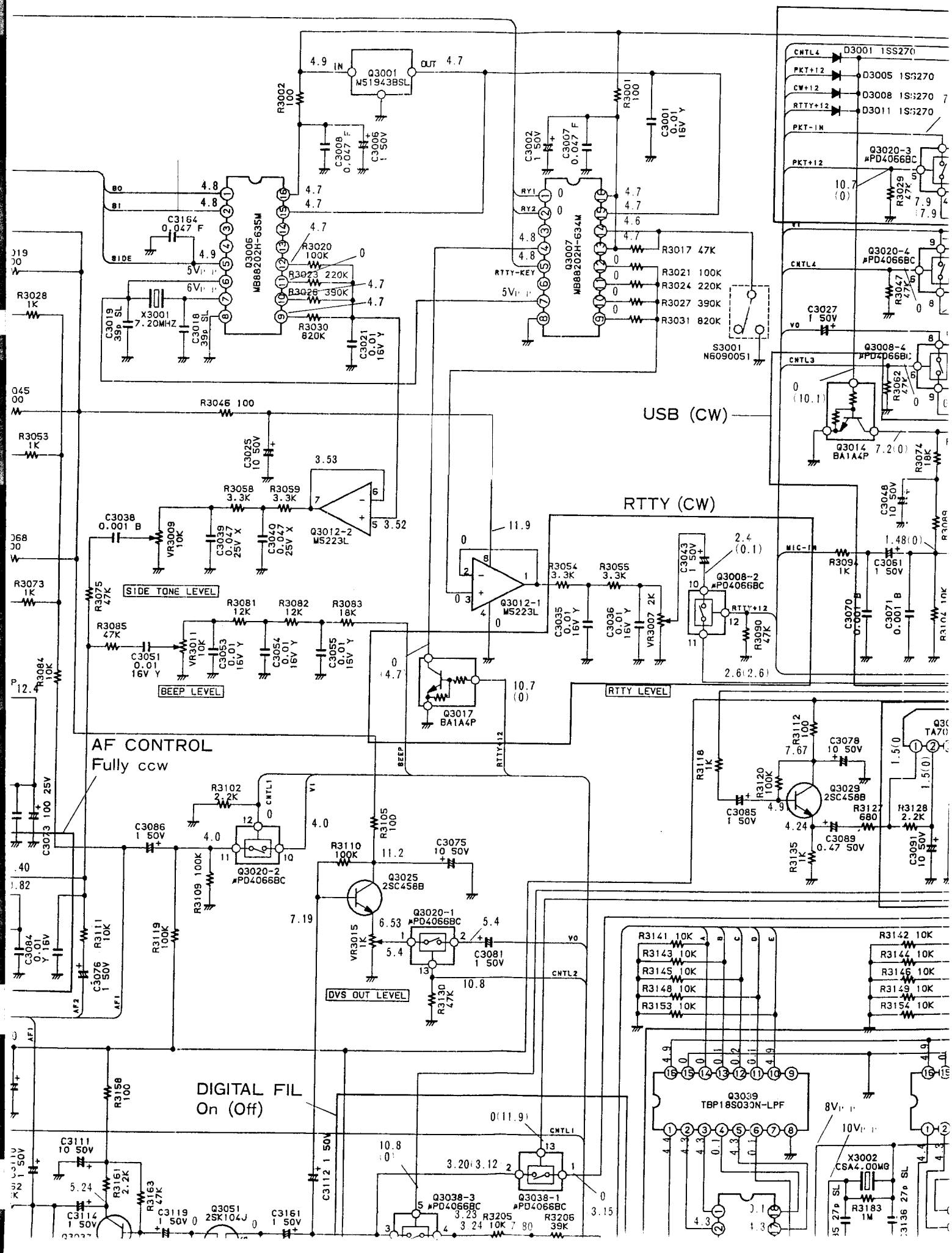
Q3001 M51943BSL
Q3006 MB88202H-635M
Q3007 MB88202H-634M
X3001 7.20MHZ
S3001 N6090051
D3001 1SS270
D3005 1SS270
D3008 1SS270
D3011 1SS270
Q3020-3 μPD4066BC
Q3020-4 μPD4066BC
Q3008-4 μPD4066BC
Q3014 BA1A4P
Q3008-2 μPD4066BC
Q3012-2 M5223L
Q3012-1 M5223L
Q3017 BA1A4P
Q3020-2 μPD4066BC
Q3025 2SC458B
Q3020-1 μPD4066BC
Q3029 2SC458B
Q3039 TBP18S039N-LPF
Q3038-3 μPD4066BC
Q3038-1 μPD4066BC
Q3051 2SK104J
X3002 CSA4.00MG
USB (CW)
RTTY (CW)
SIDE TONE LEVEL
BEEP LEVEL
RTTY LEVEL
DVS OUT LEVEL
AF CONTROL
Fully ccw
DIGITAL FIL
On (Off)

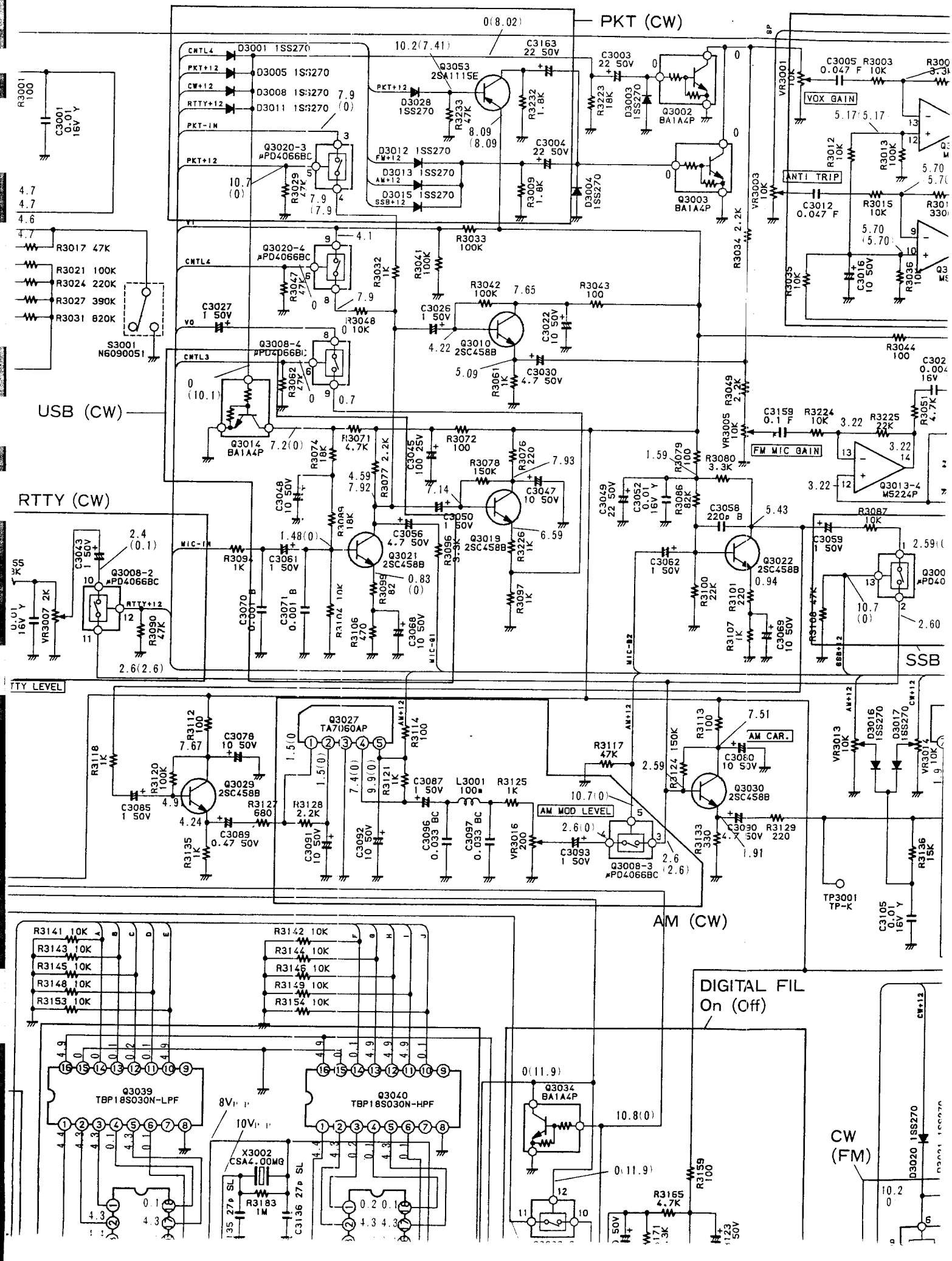
PKT (CW)
USB (CW)
RTTY (CW)
AM (CW)
SSB
CW (FM)
DIGITAL FIL
On (Off)
VOX GAIN
ANTI TRIP
FM MIC GAIN
AM CAR.
AM MOD LEVEL
TTY LEVEL
D3001 1SS270
D3005 1SS270
D3008 1SS270
D3011 1SS270
D3028 1SS270
D3012 1SS270
D3013 1SS270
D3015 1SS270
Q3053 2SA1115E
Q3002 BA1A4P
Q3003 BA1A4P
Q3020-3 μPD4066BC
Q3020-4 μPD4066BC
Q3008-4 μPD4066BC
Q3008-2 μPD4066BC
Q3008-3 μPD4066BC
Q3010 2SC458B
Q3014 BA1A4P
Q3021 2SC458B
Q3019 2SC458B
Q3022 2SC458B
Q3029 2SC458B
Q3030 2SC458B
Q3027 TA7060AP
Q3034 BA1A4P
Q3039 TBP18S030N-LPF
Q3040 TBP18S030N-HPF
Q3013-4 M5224P
S3001 N6090051
X3002 CSA4.00MG
TP3001 TP-K
CNTL4
CNTL3
PKT+12
CW+12
RTTY+12
AM+12
SSB+12
PKT-IN
MIC-IN
MIC-91
MIC-82
8Vp-p
10Vp-p

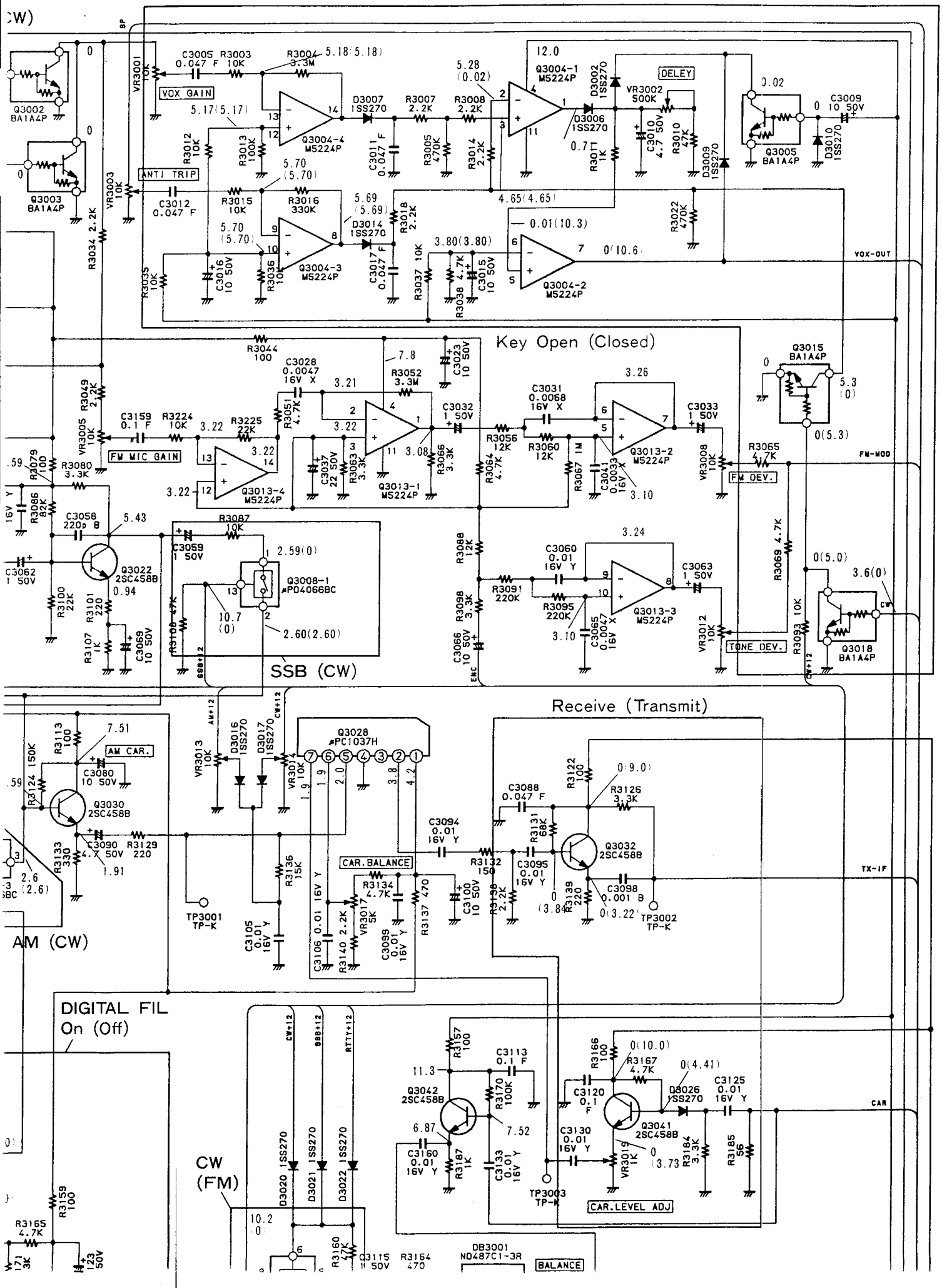
VOX GAIN
ANTI TRIP
DELEY
VOX-OUT
Key Open (Closed)
FM MIC GAIN
FM DEV.
FM-MOD
TONE DEV.
SSB (CW)
Receive (Transmit)
AM (CW)
AM CAR.
CAR.BALANCE
TX-IF
DIGITAL FIL
On (Off)
CW (FM)
CAR.LEVEL ADJ
CAR
BALANCE
Q3004-1 M5224P
Q3004-2 M5224P
Q3004-3 M5224P
Q3004-4 M5224P
Q3013-1 M5224P
Q3013-2 M5224P
Q3013-3 M5224P
Q3013-4 M5224P
Q3002 BA1A4P
Q3003 BA1A4P
Q3005 BA1A4P
Q3015 BA1A4P
Q3018 BA1A4P
Q3022 2SC458B
Q3030 2SC458B
Q3032 2SC458B
Q3041 2SC458B
Q3042 2SC458B
Q3008-1 μPD4066BC
Q3028 μPC1037H
TP3001 TP-K
TP3002 TP-K
TP3003 TP-K
DB3001 ND487C1-3R

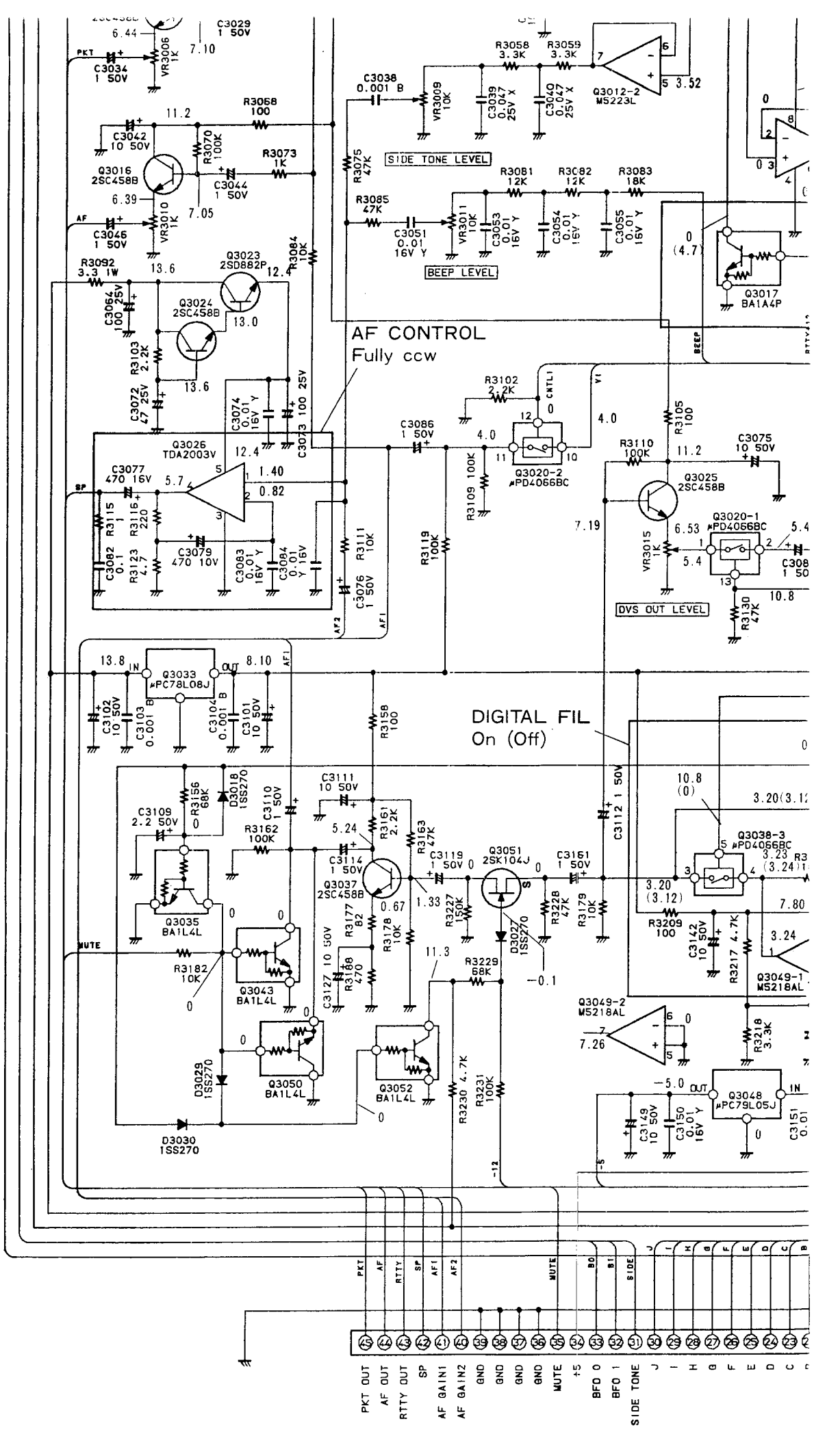
AF CONTROL
Fully ccw
DIGITAL FIL
On (Off)
SIDE TONE LEVEL
BEEP LEVEL
DVS OUT LEVEL
Q3012-2
M5223L
Q3016
2SC458B
Q3023
2SD882P
Q3024
2SC458B
Q3026
TDA2003V
Q3020-2
μPD4066BC
Q3025
2SC458B
Q3020-1
μPD4066BC
Q3017
BA1A4P
Q3033
μPC78L08J
Q3035
BA1L4L
Q3043
BA1L4L
Q3050
BA1L4L
Q3052
BA1L4L
Q3037
2SC458B
Q3051
2SK104J
Q3038-3
μPD4066BC
Q3049-1
M5218AL
Q3049-2
M5218AL
Q3048
μPC79L05J
D3030
1SS270
D3029
1SS270
D3018
1SS270
D3027
1SS270
PKT OUT
AF OUT
RTTY OUT
SP
AF GAIN1
AF GAIN2
GND
GND
GND
GND
MUTE
+5
BFO 0
BFO 1
SIDE TONE

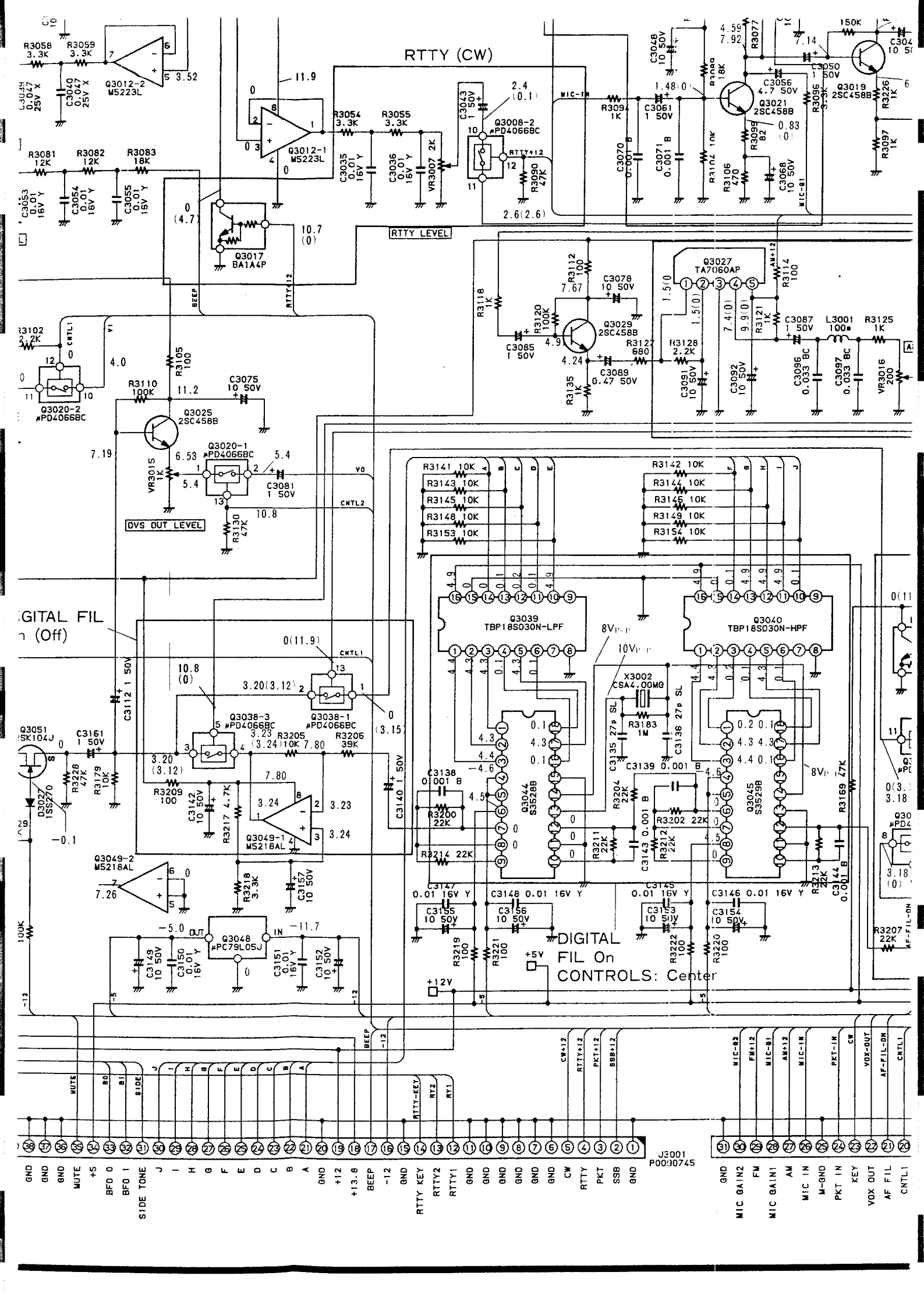
RTTY (CW)
RTTY LEVEL
DVS OUT LEVEL
DIGITAL FIL On
CONTROLS: Center
Q3012-2 M5223L
Q3012-1 M5223L
Q3008-2 μPD4066BC
Q3017 BA1A4P
Q3027 TA7060AP
Q3029 2SC458B
Q3020-2 μPD4066BC
Q3025 2SC458B
Q3020-1 μPD4066BC
Q3039 TBP18S030N-LPF
Q3040 TBP18S030N-HPF
Q3038-3 μPD4066BC
Q3038-1 μPD4066BC
Q3049-1 M5218AL
Q3049-2 M5218AL
Q3044 S3528B
Q3045 S3529B
Q3048 μPC79L05J
Q3051 2SK104J
Q3021 2SC458B
Q3019 2SC458B
X3002 CSA4.00MG
J3001 P0090745

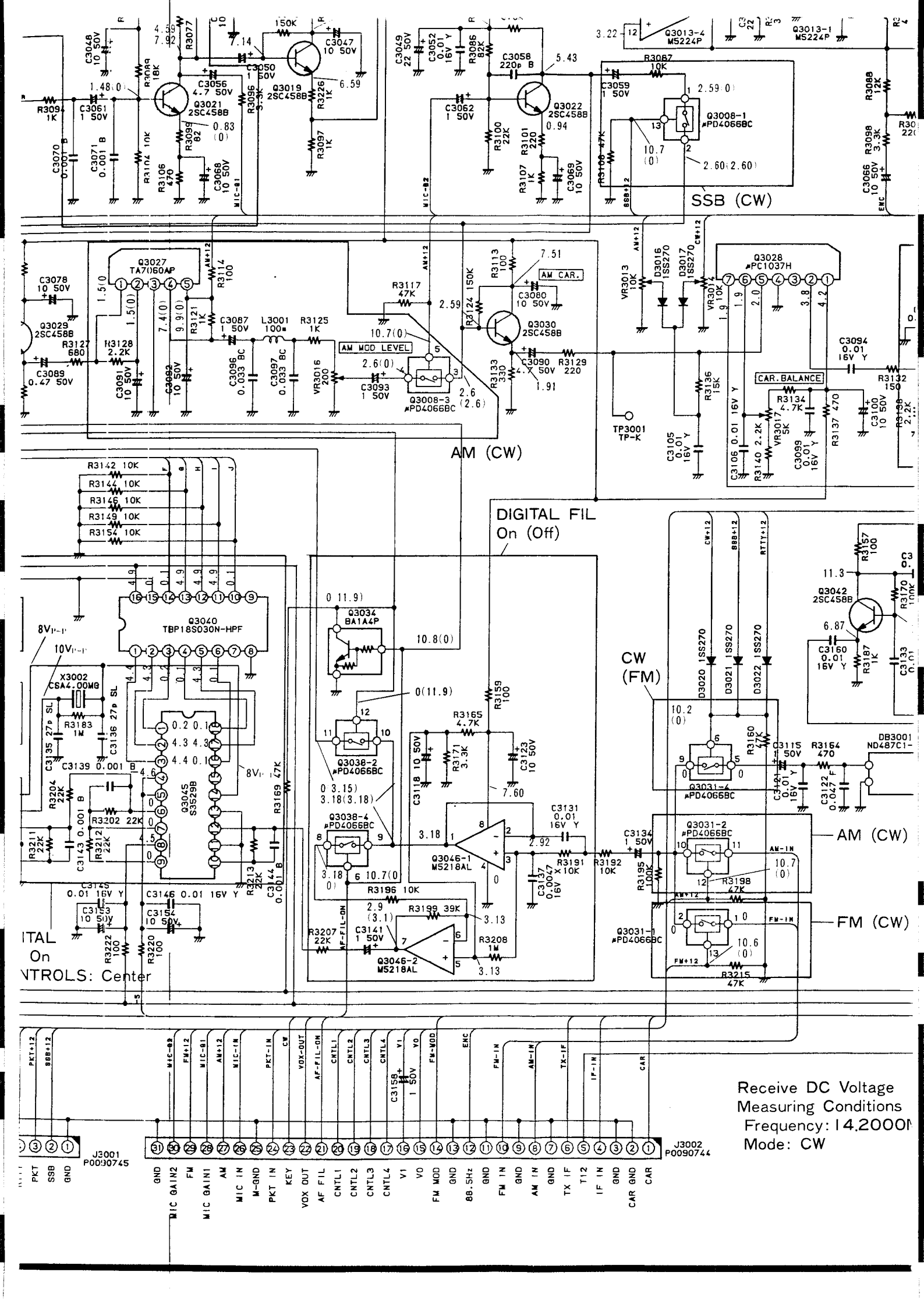
SSB (CW)
AM (CW)
DIGITAL FIL
On (Off)
CW
(FM)
AM (CW)
FM (CW)
Receive DC Voltage
Measuring Conditions
Frequency: 14.2000M
Mode: CW
J3001
P0090745
J3002
P0090744

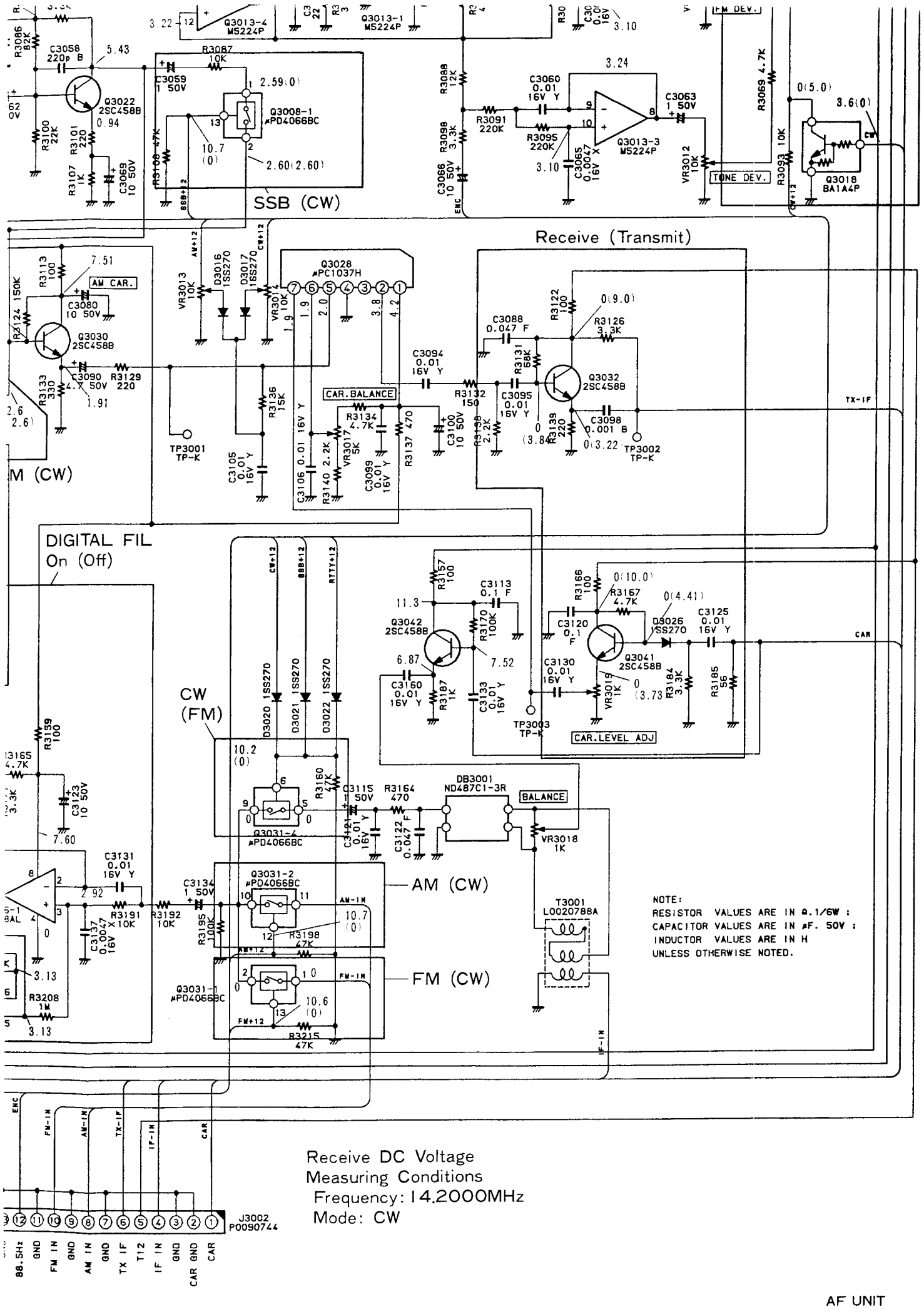

NOTE:
RESISTOR VALUES ARE IN Ω,1/6W ;
CAPACITOR VALUES ARE IN μF. 50V ;
INDUCTOR VALUES ARE IN H
UNLESS OTHERWISE NOTED.

Receive DC Voltage
Measuring Conditions
Frequency: 14.2000MHz
Mode: CW

AF UNIT

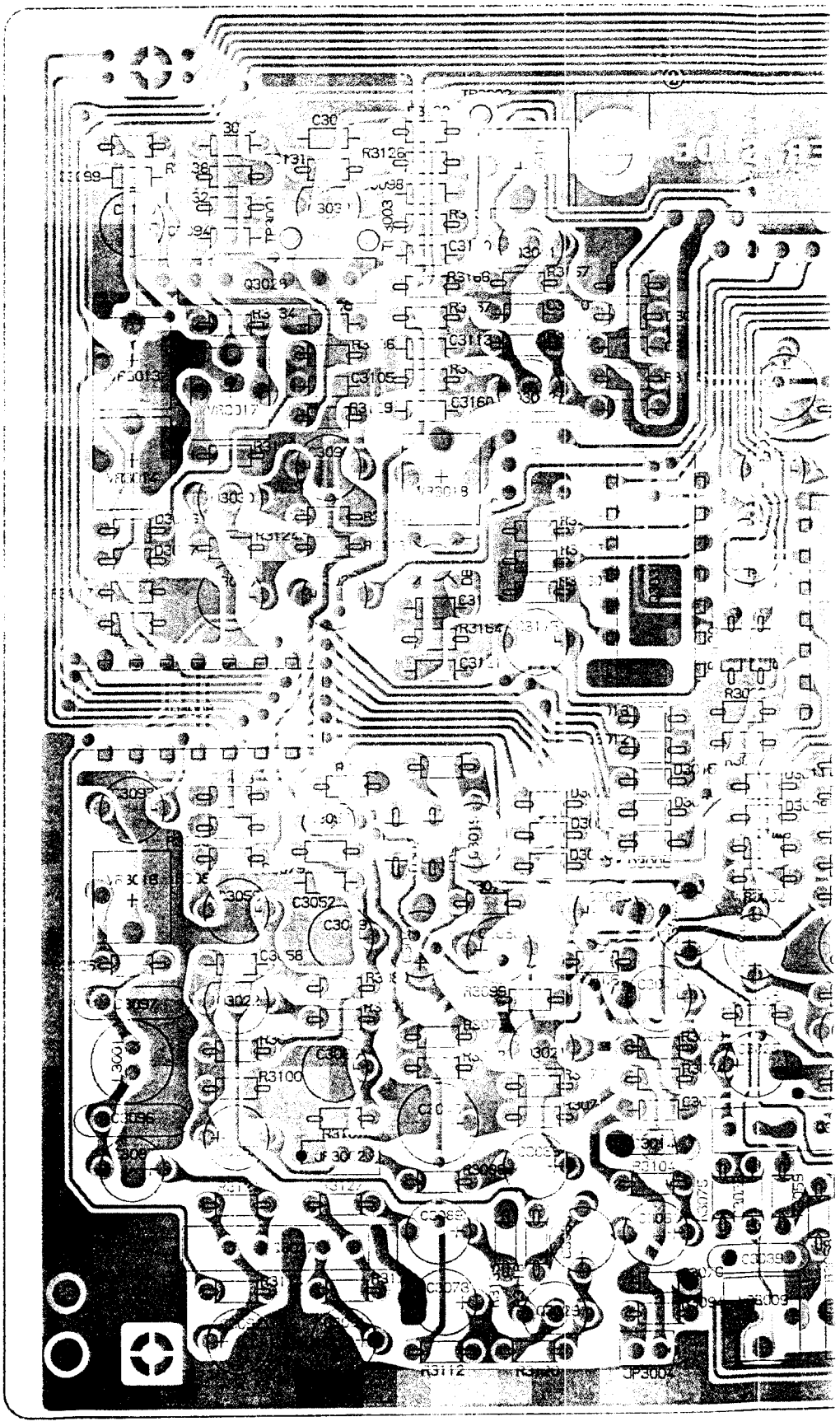
C30
R3126
C3105
C3052
R3100
JP3002


PIN 16


Pin 13

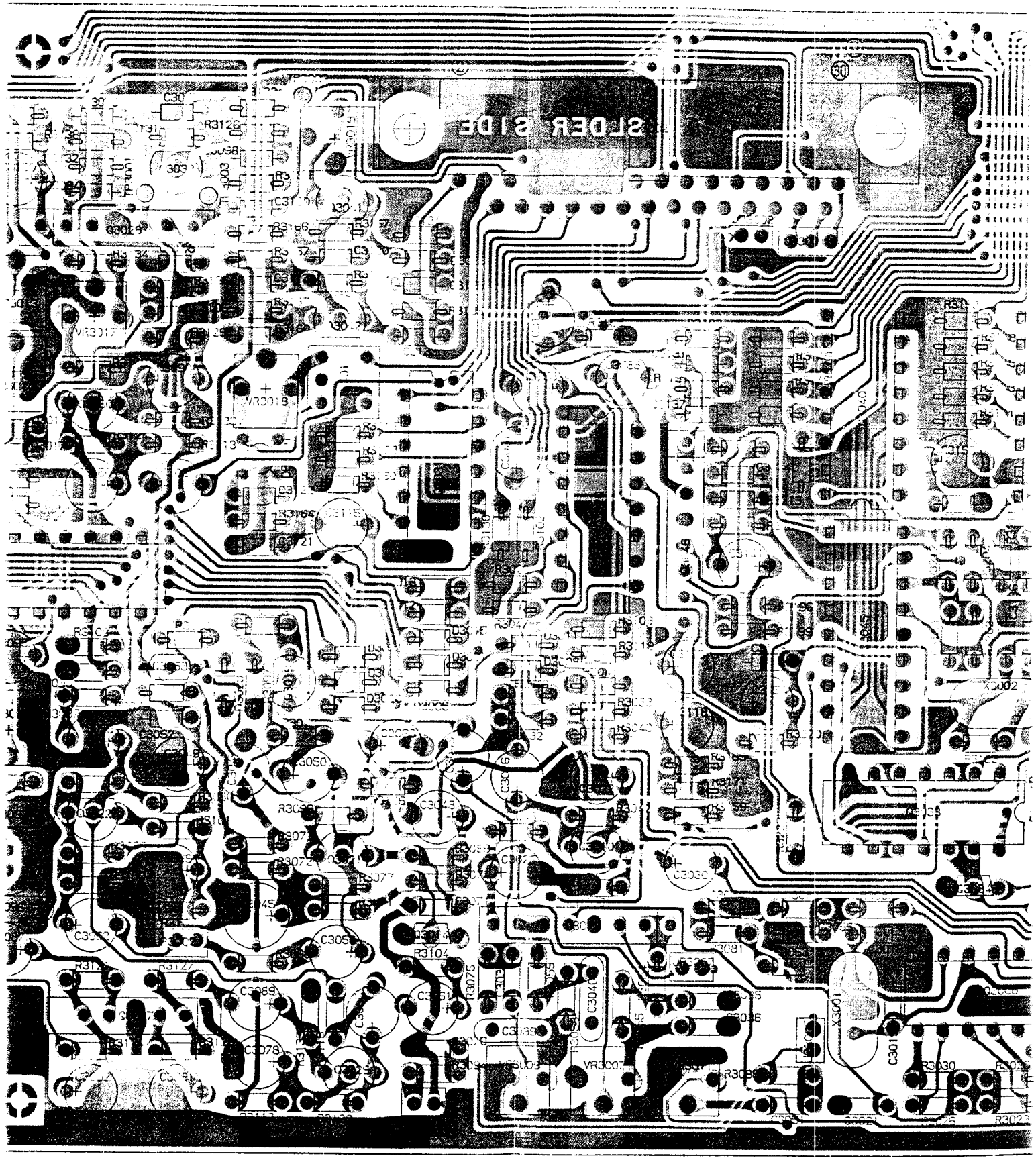
SLDER SIDE


PIN 16



Pin 18


PIN 8

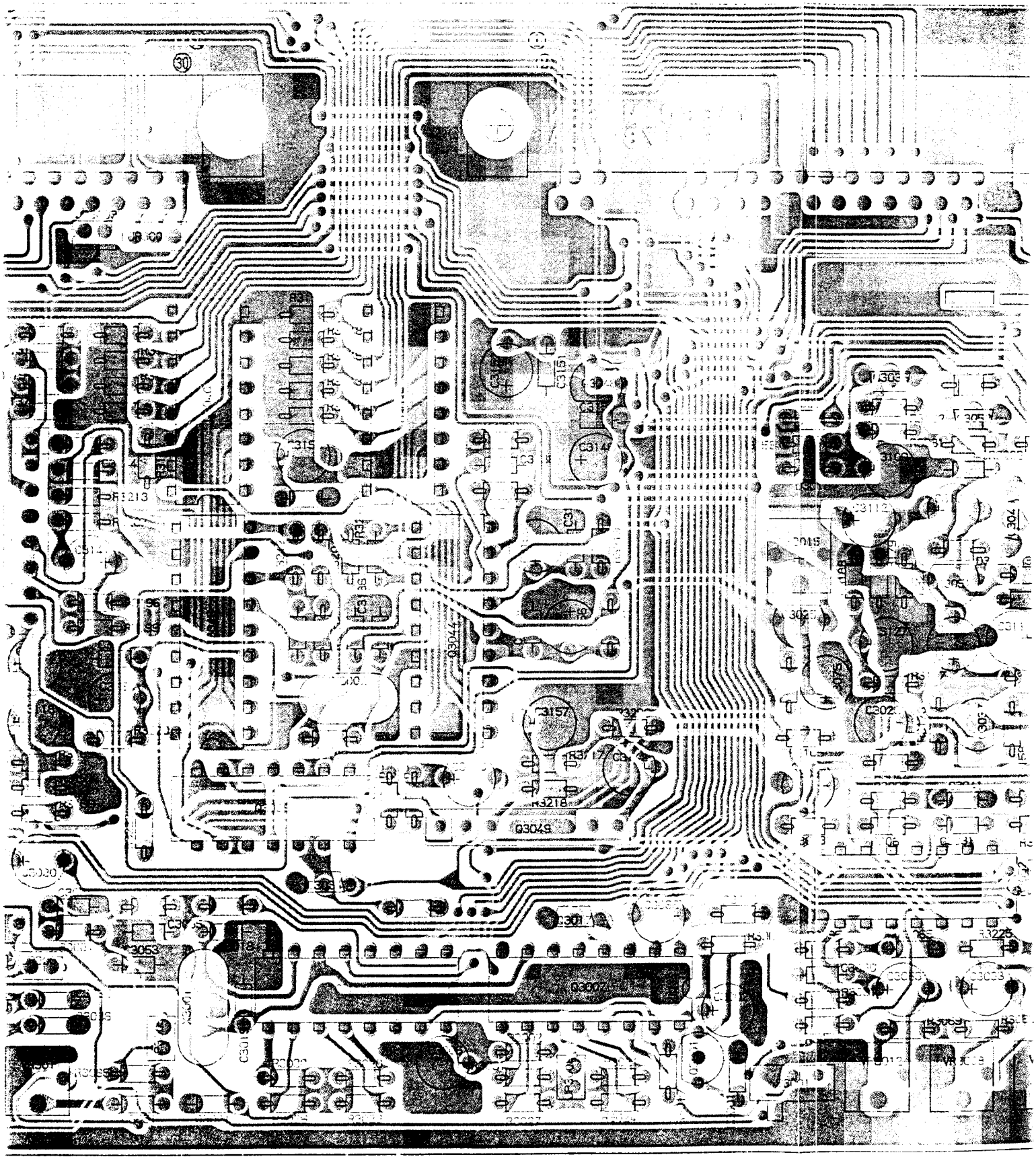
30
C3157
C3147
C3151
C3152
C3153
C3154
C3155
C3156
C3158
C3159
C3160
C3161
C3162
C3163
C3164
C3165
C3166
C3167
C3168
C3169
C3170
C3171
C3172
C3173
C3174
C3175
C3176
C3177
C3178
C3179
C3180
C3181
C3182
C3183
C3184
C3185
C3186
C3187
C3188
C3189
C3190
C3191
C3192
C3193
C3194
C3195
C3196
C3197

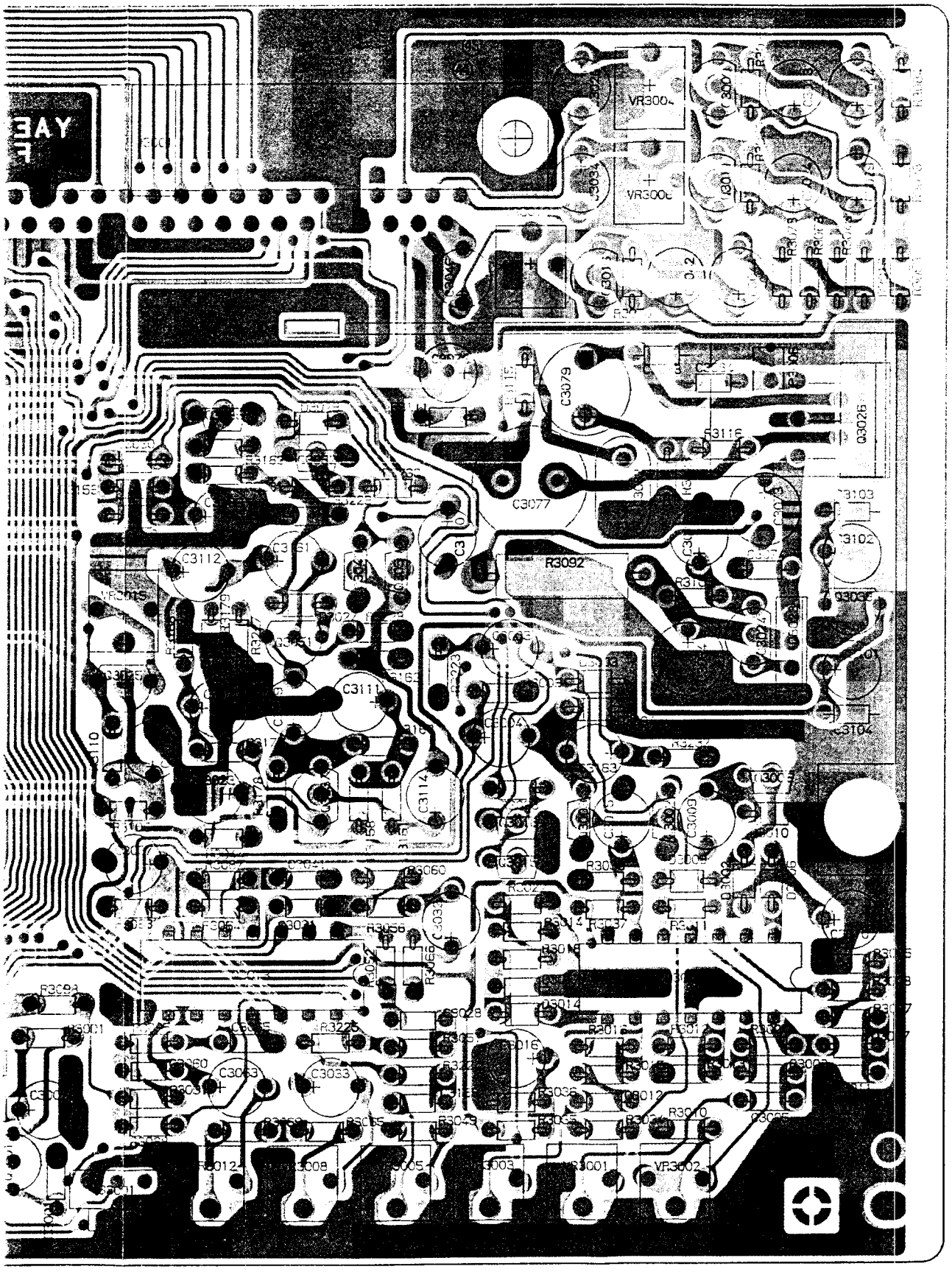

("component" side)

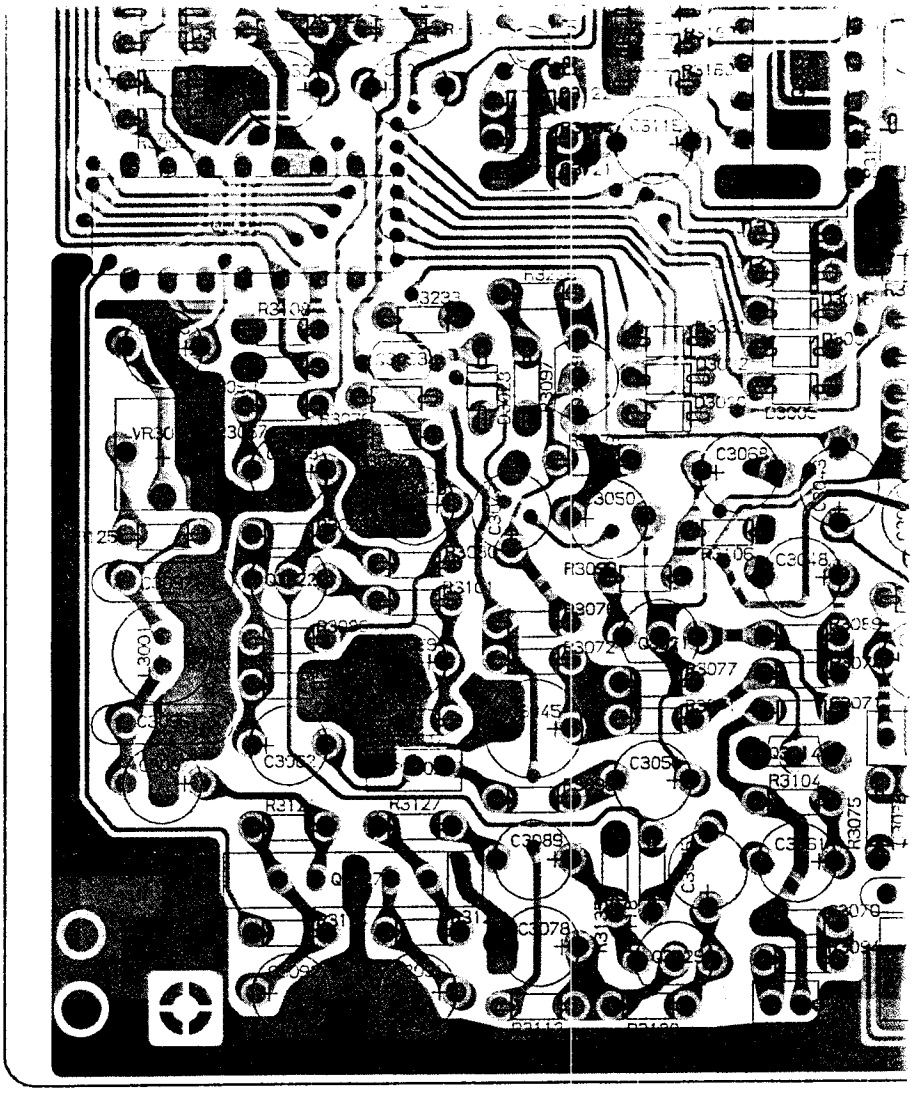

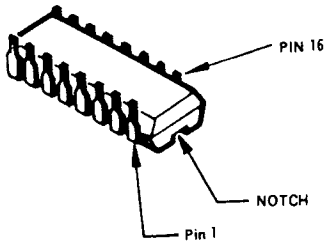

MB88202H-634M
(Q3007)
MB88202H-635M
(Q3006)
TBP18S030NLPF
(Q3039)
TBP18S030NHPF
(Q3040)
μPD4066BC
(Q3008, 3020, 3031, 3038)

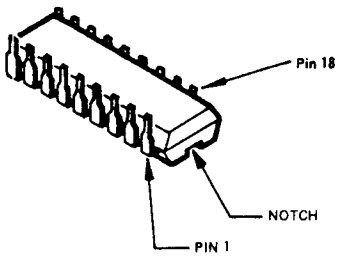

S3528B
(Q3044)
S3529B
(Q3045)

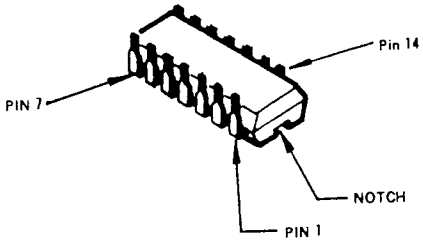

M5224P
(Q3004, 3013)

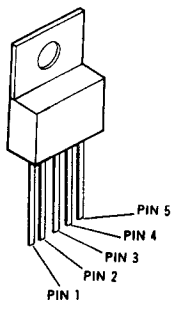

TDA2003
(Q3026)

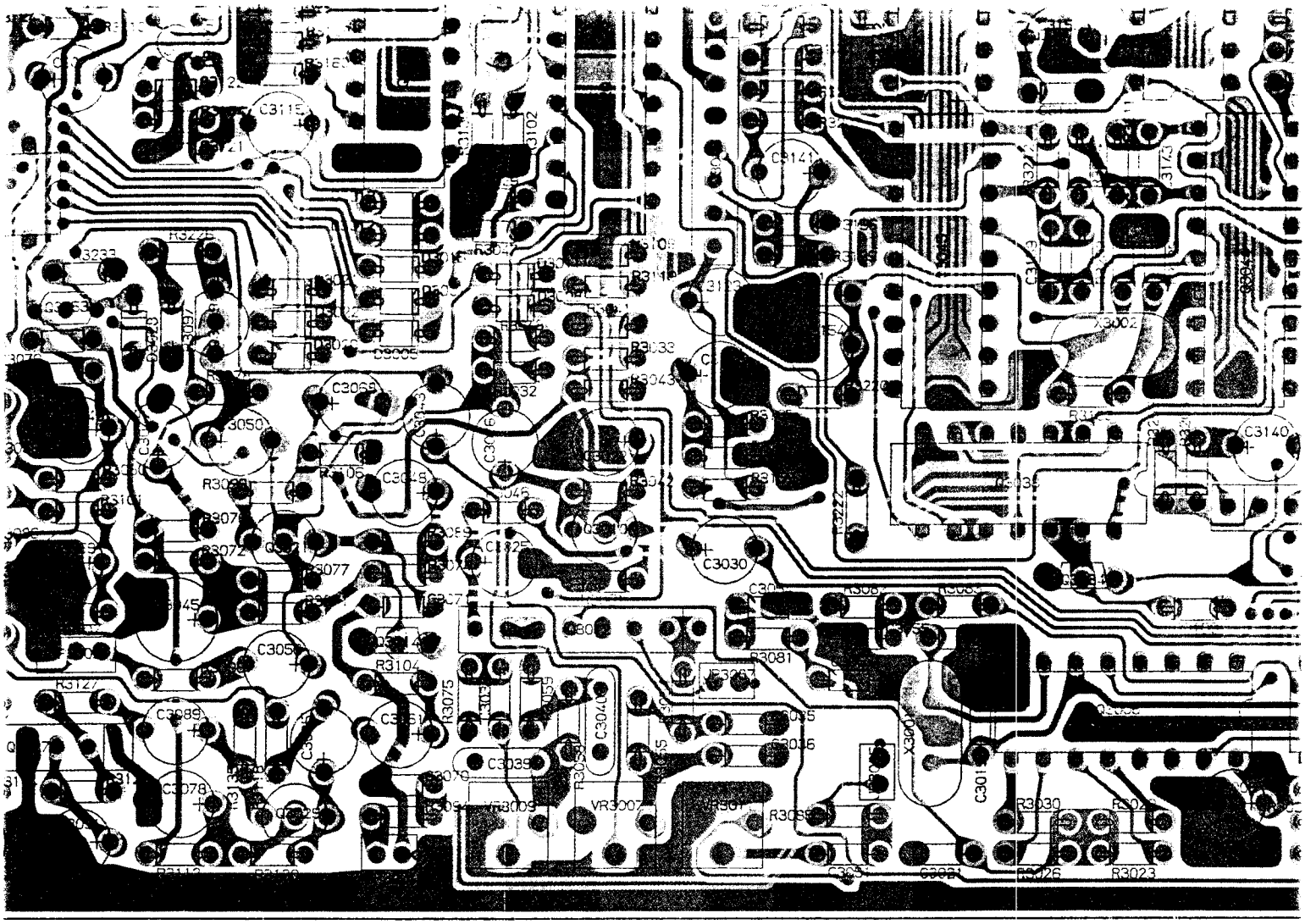

PIN 16

TCH

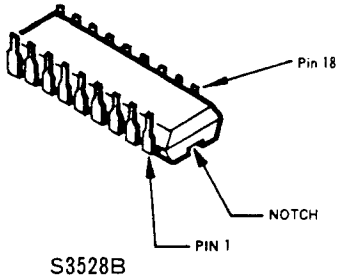

S3528B
(Q3044)
S3529B
(Q3045)

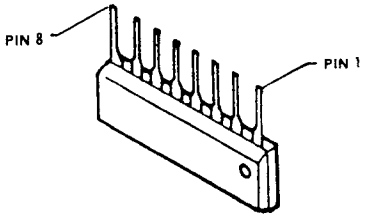

M5218AL
(Q3046, 3049)
M5223L
(Q3012)

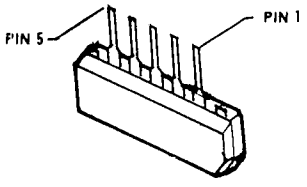

TA7060AP
(Q3027)

Pin 14

OTCH

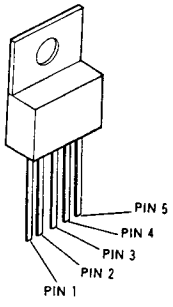

TDA2003
(Q3026)

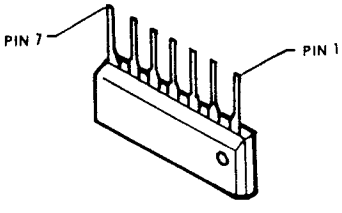

μPC1037H
(Q3028)

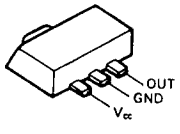

M51943BSL (A4)
(Q3001)

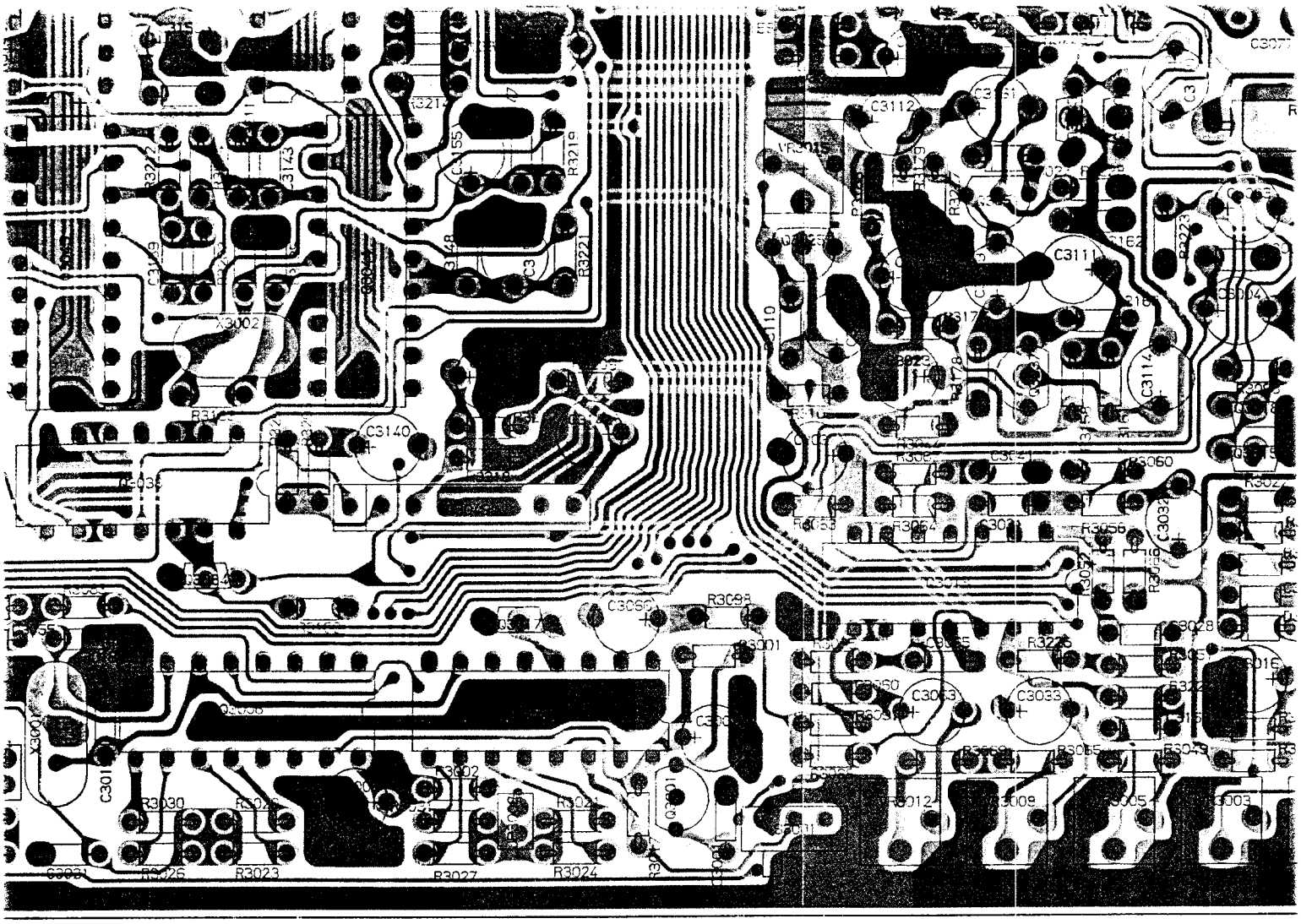

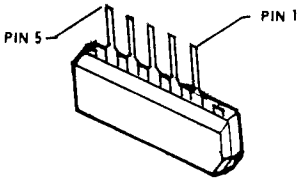

TA7060AP
(Q3027)

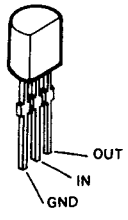

μPC79L05J
(Q3048)

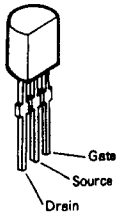

2SK104J
(Q3051)

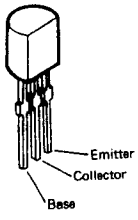

2SC458
(Q3009, 3010, 3011,
3016, 3019, 3021,
3022, 3024, 3025,
3029, 3030, 3032,
3037, 3041, 3042)

BA1
(Q3
BA1
(Q3

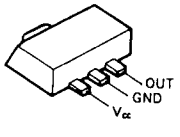

M51943BSL (A4)
(Q3001)

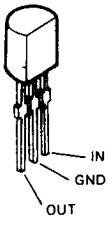

μPC78L08J
(Q3033)

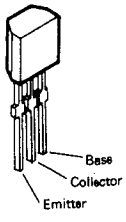

2SA1115E
(Q3053)

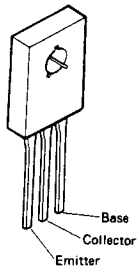

2SD882P
(Q3023)

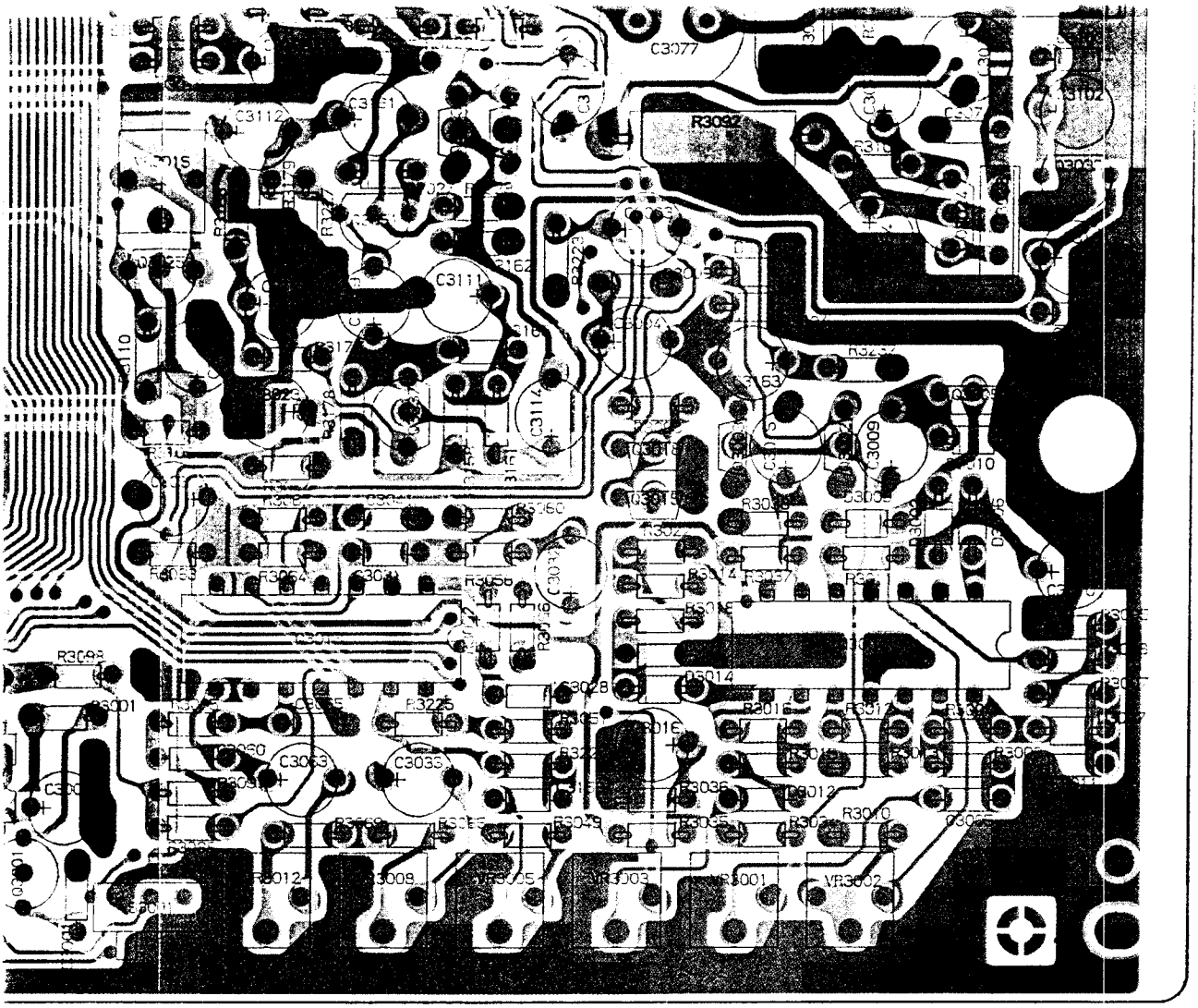

("component" side)

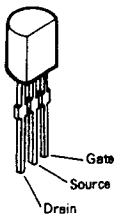

2SK104J
(Q3051)

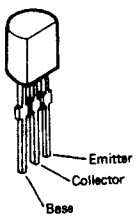

2SC458
(Q3009, 3010, 3011,
3016, 3019, 3021,
3022, 3024, 3025,
3029, 3030, 3032,
3037, 3041, 3042)

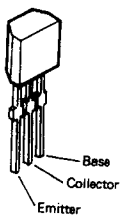

BA1A4P
(Q3002, 3003, 3005, 3014, 3015, 3017, 3018, 3034)
BA1L4L
(Q3035, 3043, 3050, 3052)

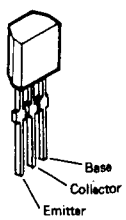

2SA1115E
(Q3053)

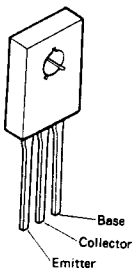

2SD882P
(Q3023)

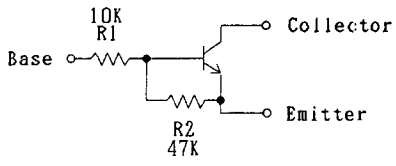

BA1A4P CIRCUIT DIAGRAM

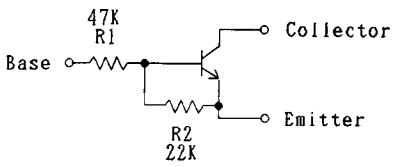

BA1L4L CUICUIT DIAGRAM

AF UNIT

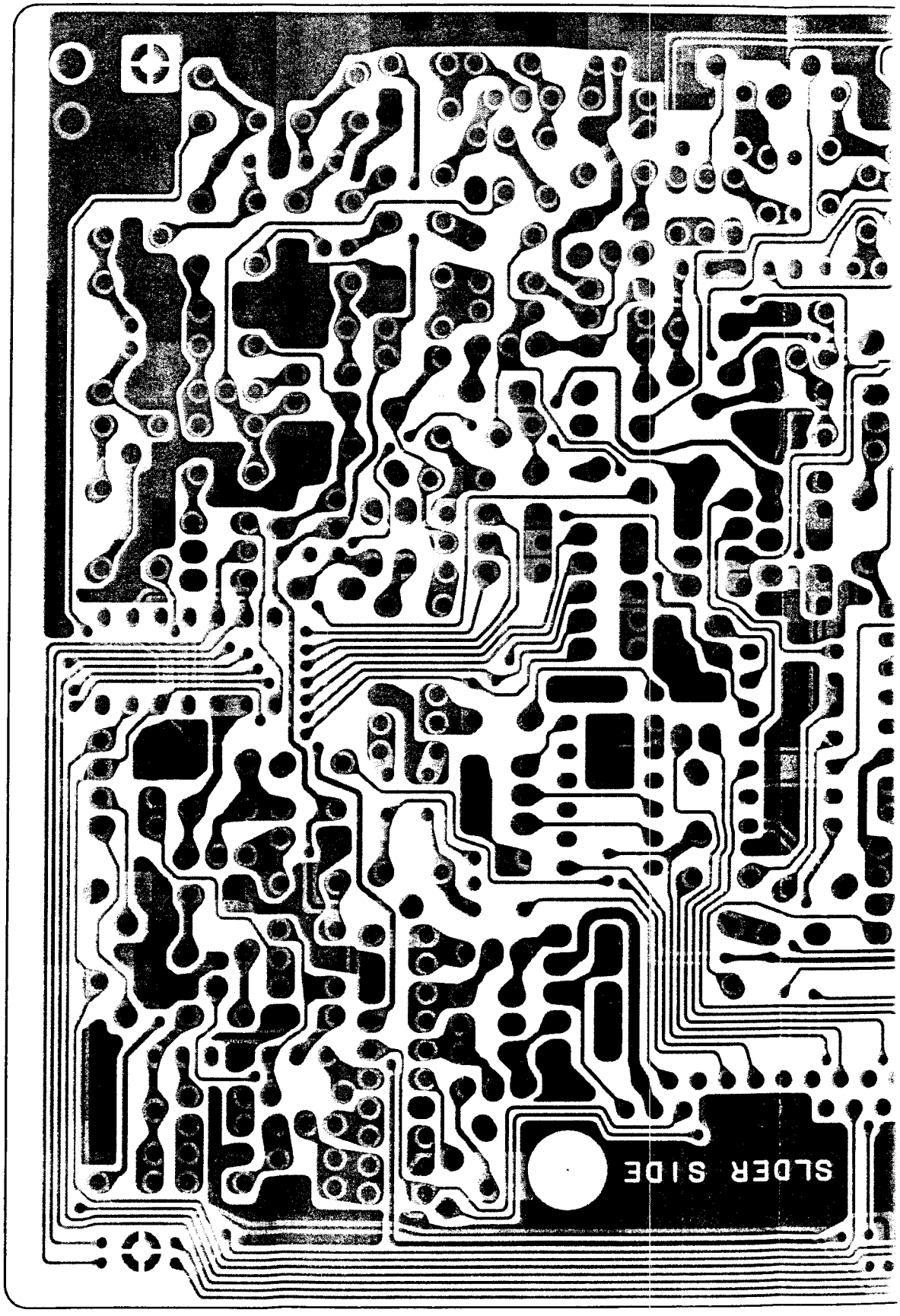
SLDER SIDE

C3008
C3164
SLDER SIDE

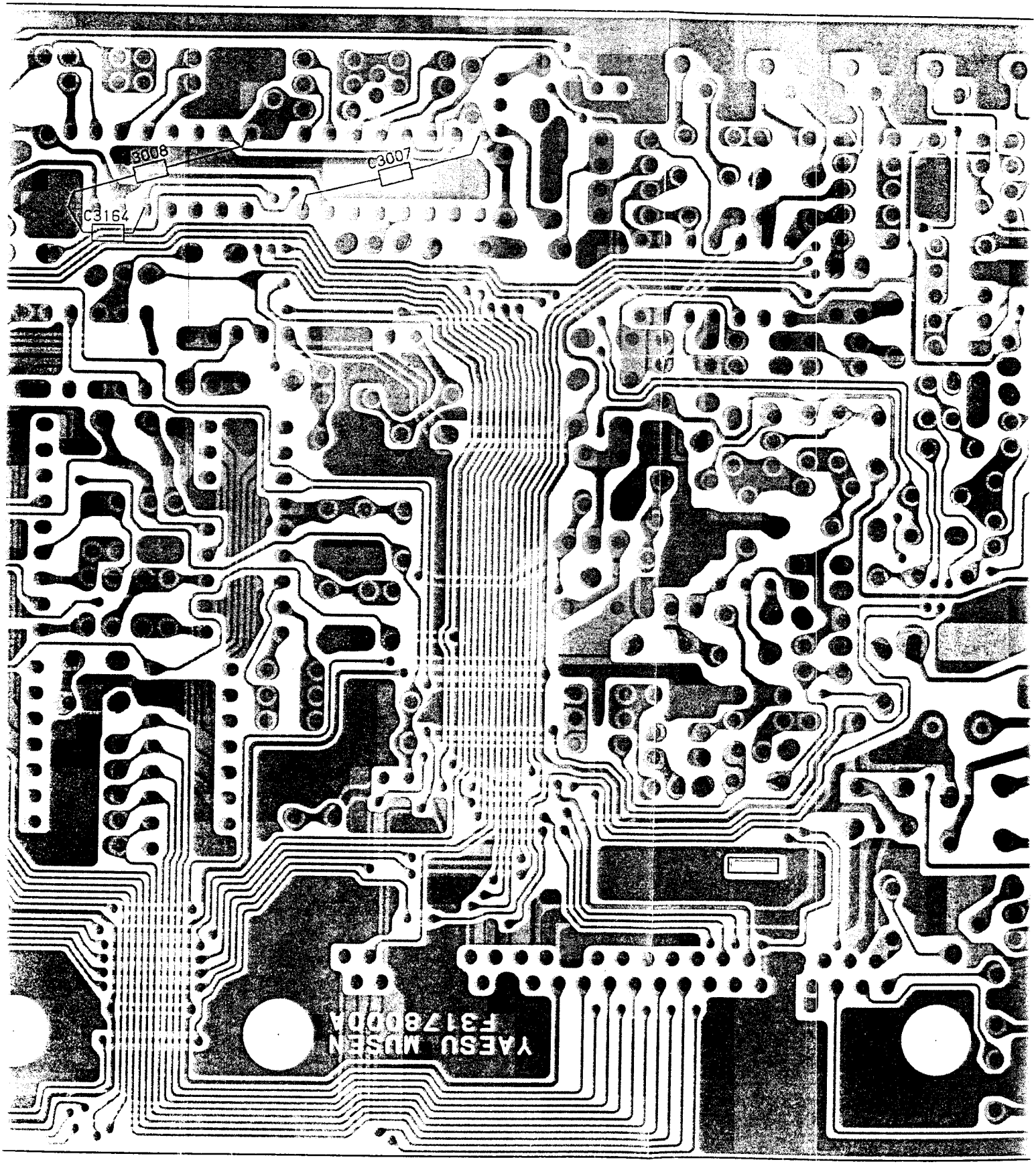
C3008
C3007
C3164
YAESU MUSEN
F3178000A

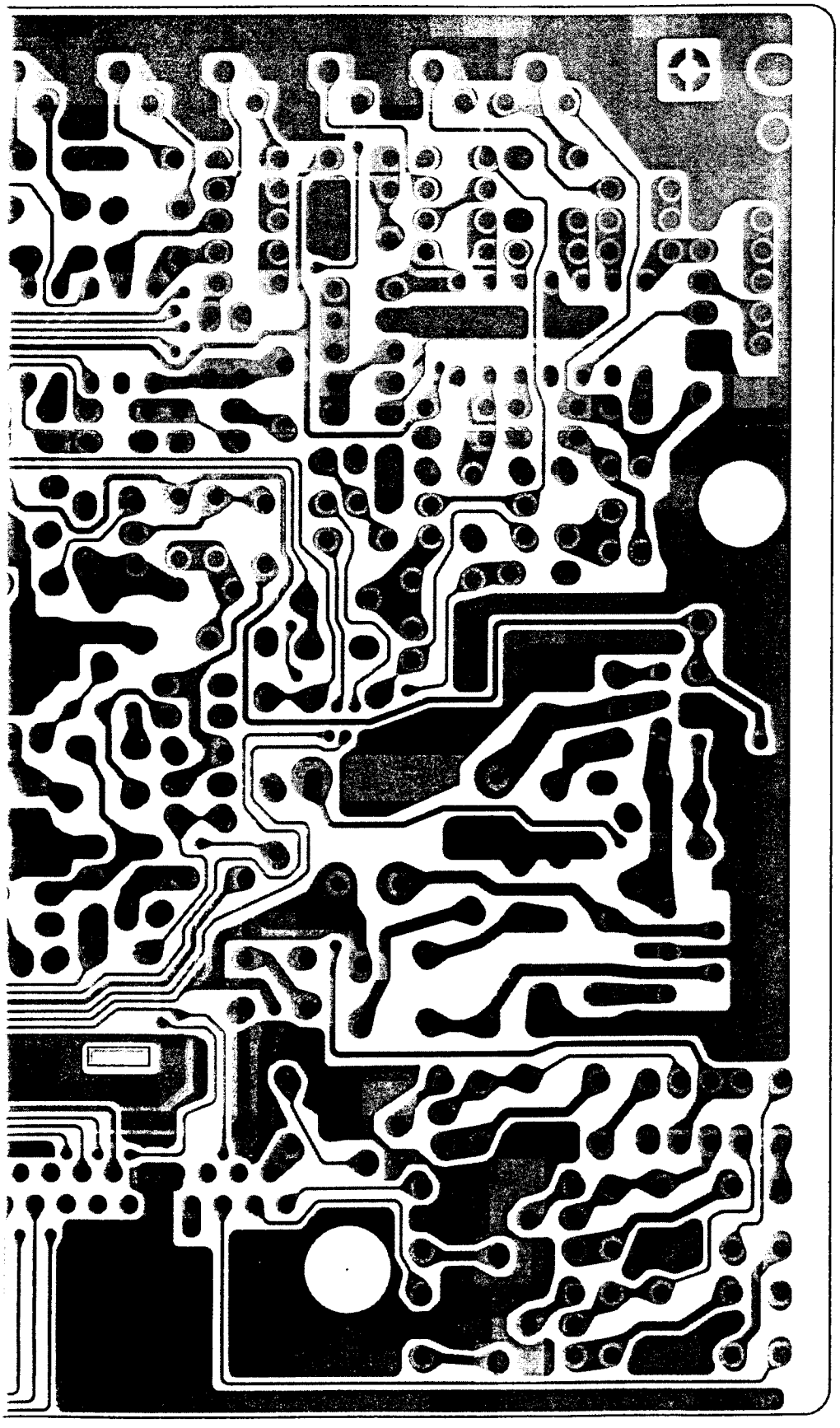

("chip only" side)

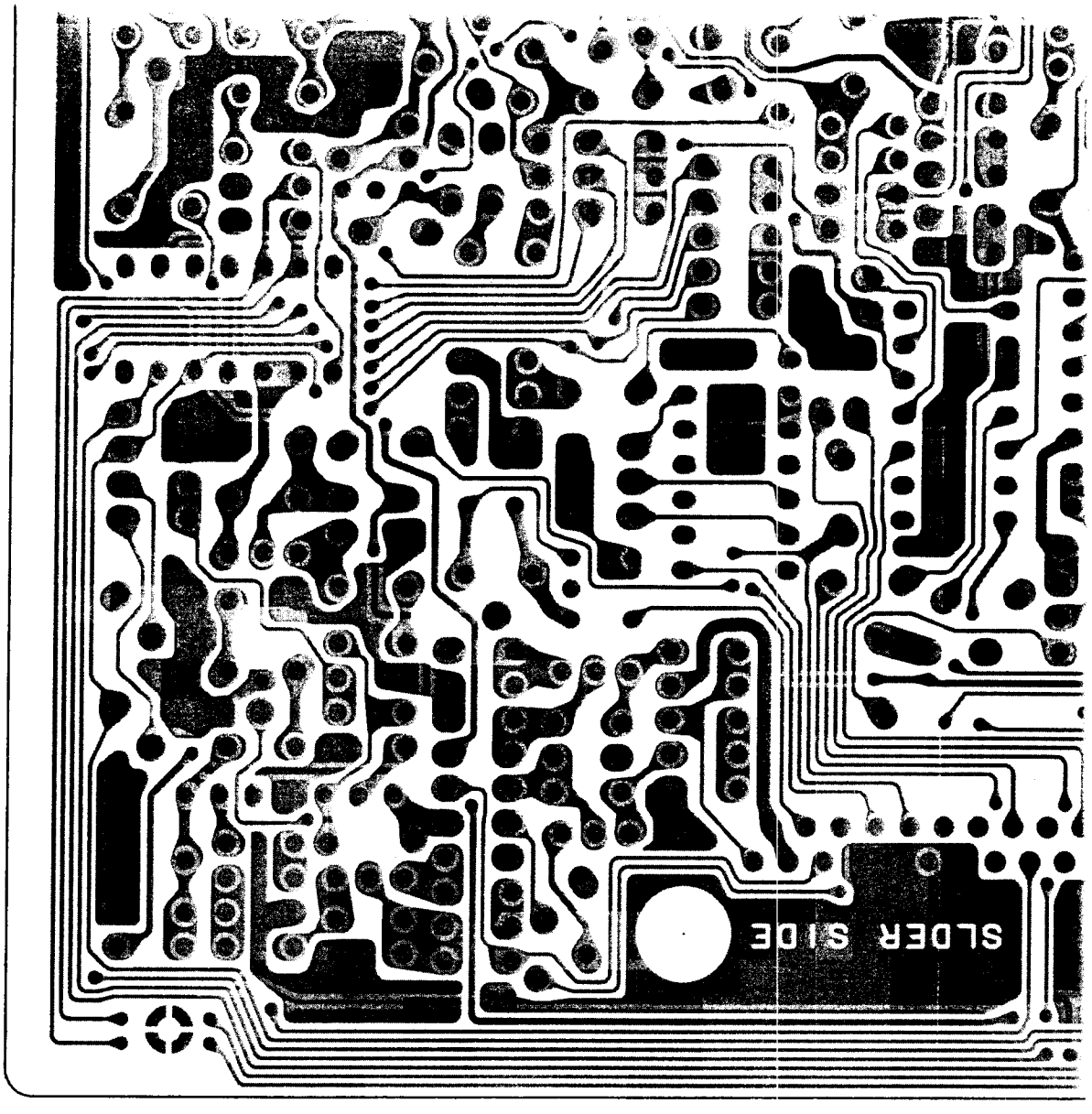
SLDER SIDE

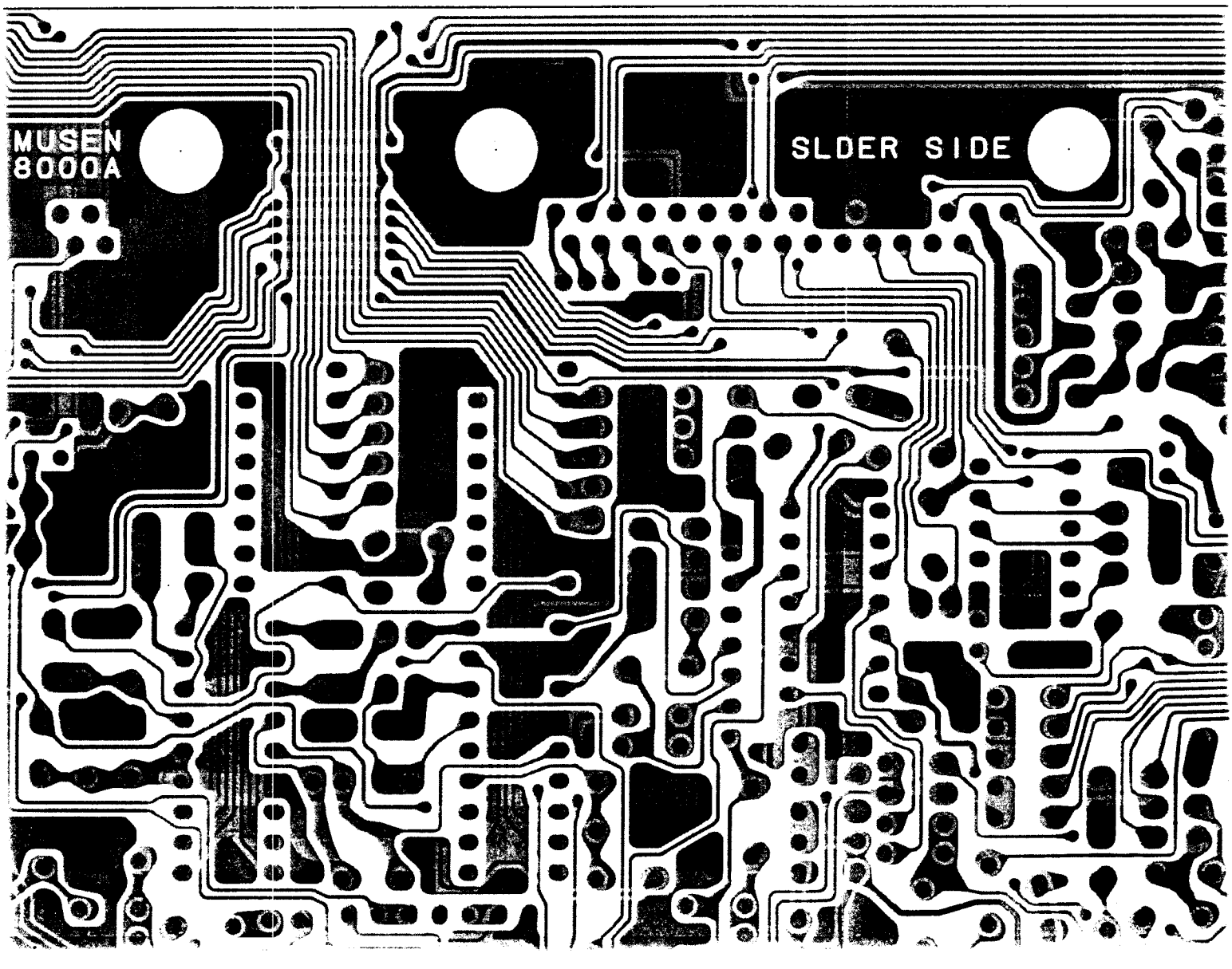
MUSEN
8000A
SLDER SIDE

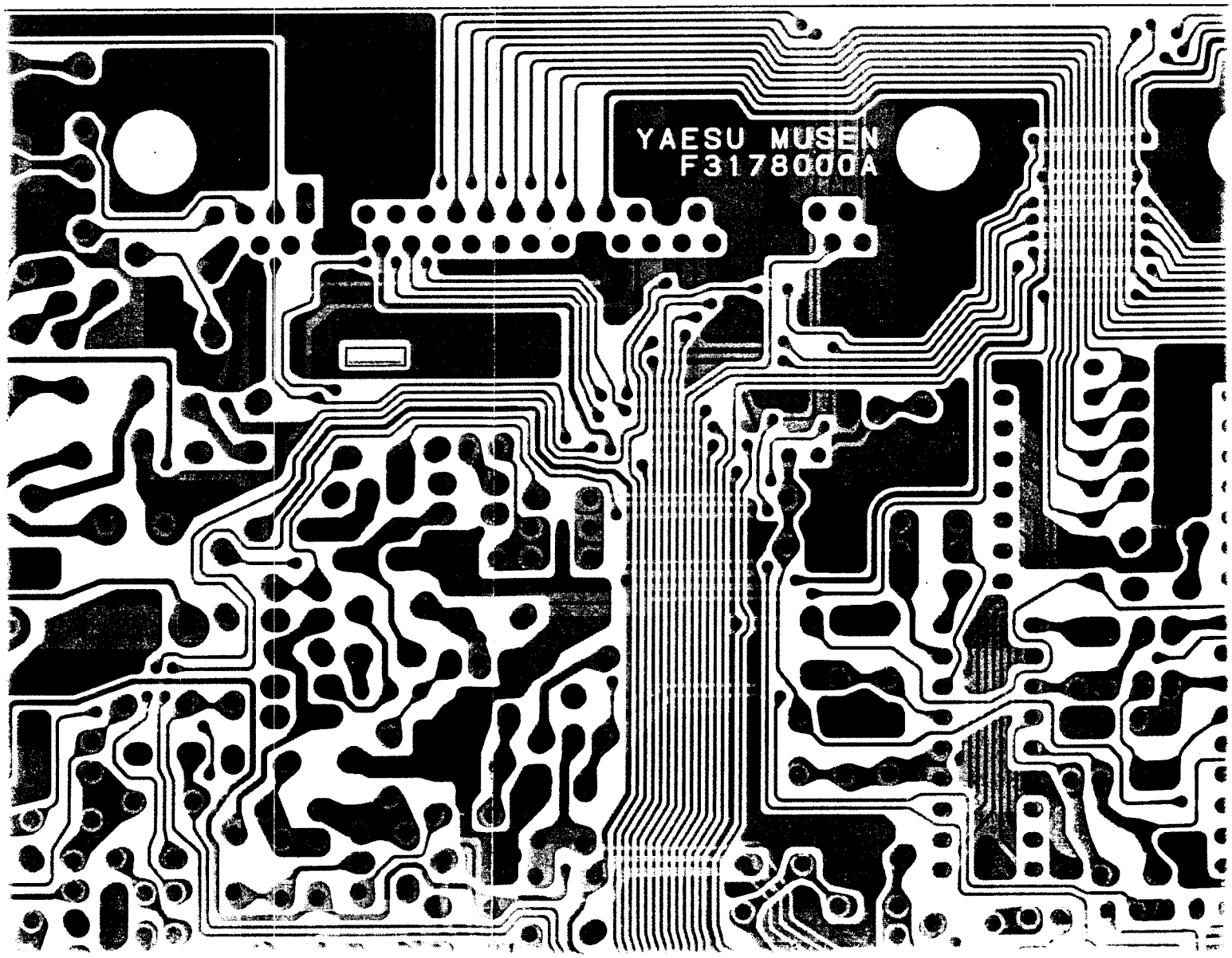
YAESU MUSEN
F3178000A

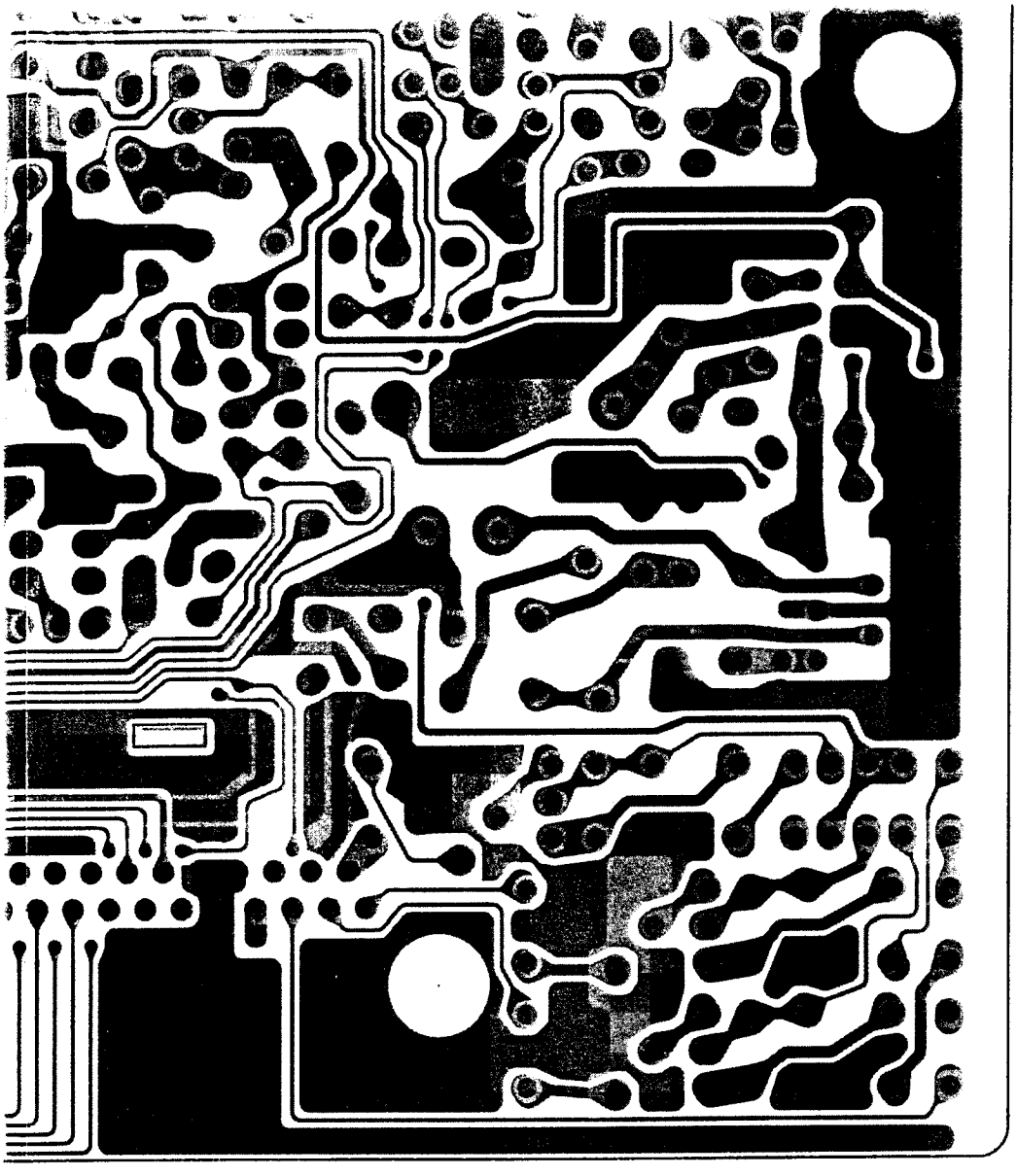

("chip only" side)

REF.	YAESU P/N	DESCRIPTION	MFGR'S DESIG	VALUE	WV	TOL.	VERS.
		*** AF UNIT ***					
	CA0501001	P.C.B. W COMP.					
	F3178000A	P.C.B. W/O COMP.					
C 3001	K28129001	CERAMIC CAP.	EP050Y103N-A	0.01uF	16V	Y	
C 3002	K46170017	AL. ELECTRO. CAP.	50V010M5X11TR5	1uF	50V		
C 3003	K46170022	AL. ELECTRO. CAP.	50V220M5X11TR5	22uF	50V		
C 3004	K46170022	AL. ELECTRO. CAP.	50V220M5X11TR5	22uF	50V		
C 3005	K28179002	CERAMIC CAP.	UP050F473Z-A-B	0.047uF	50V	F	
C 3006	K46170017	AL. ELECTRO. CAP.	50V010M5X11TR5	1uF	50V		
C 3007	K28179002	CERAMIC CAP.	UP050F473Z-A-B	0.047uF	50V	F	
C 3008	K28179002	CERAMIC CAP.	UP050F473Z-A-B	0.047uF	50V	F	
C 3009	K46170021	AL. ELECTRO. CAP.	50V100M5X11TR5	10uF	50V		
C 3010	K46170020	AL. ELECTRO. CAP.	50V4R7M5X11TR5	4.7uF	50V		
C 3011	K28179002	CERAMIC CAP.	UP050F473Z-A-B	0.047uF	50V	F	
C 3012	K28179002	CERAMIC CAP.	UP050F473Z-A-B	0.047uF	50V	F	
C 3013	K46170021	AL. ELECTRO. CAP.	50V100M5X11TR5	10uF	50V		
C 3014	K46170017	AL. ELECTRO. CAP.	50V010M5X11TR5	1uF	50V		
C 3015	K46170021	AL. ELECTRO. CAP.	50V100M5X11TR5	10uF	50V		
C 3016	K46170021	AL. ELECTRO. CAP.	50V100M5X11TR5	10uF	50V		
C 3017	K28179002	CERAMIC CAP.	UP050F473Z-A-B	0.047uF	50V	F	
C 3018	K28179073	CERAMIC CAP.	UP050SL390J-A-B	39pF	50V	SL	
C 3019	K28179073	CERAMIC CAP.	UP050SL390J-A-B	39pF	50V	SL	
C 3020	K46170017	AL. ELECTRO. CAP.	50V010M5X11TR5	1uF	50V		
C 3021	K28129001	CERAMIC CAP.	EP050Y103N-A	0.01uF	16V	Y	
C 3022	K46170021	AL. ELECTRO. CAP.	50V100M5X11TR5	10uF	50V		
C 3023	K46170021	AL. ELECTRO. CAP.	50V100M5X11TR5	10uF	50V		
C 3024	K46170021	AL. ELECTRO. CAP.	50V100M5X11TR5	10uF	50V		
C 3025	K46170021	AL. ELECTRO. CAP.	50V100M5X11TR5	10uF	50V		
C 3026	K46170017	AL. ELECTRO. CAP.	50V010M5X11TR5	1uF	50V		
C 3027	K46170017	AL. ELECTRO. CAP.	50V010M5X11TR5	1uF	50V		
C 3028	K28129005	CERAMIC CAP.	EP050X472M-A-B	0.0047uF	16V	X	
C 3029	K46170017	AL. ELECTRO. CAP.	50V010M5X11TR5	1uF	50V		
C 3030	K46170020	AL. ELECTRO. CAP.	50V4R7M5X11TR5	4.7uF	50V		
C 3031	K28129006	CERAMIC CAP.	EP050X682M-A-B	0.0068uF	16V	X	
C 3032	K46170017	AL. ELECTRO. CAP.	50V010M5X11TR5	1uF	50V		
C 3033	K46170017	AL. ELECTRO. CAP.	50V010M5X11TR5	1uF	50V		
C 3034	K46170017	AL. ELECTRO. CAP.	50V010M5X11TR5	1uF	50V		
C 3035	K28129001	CERAMIC CAP.	EP050Y103N-A	0.01uF	16V	Y	
C 3036	K28129001	CERAMIC CAP.	EP050Y103N-A	0.01uF	16V	Y	
C 3037	K46170022	AL. ELECTRO. CAP.	50V220M5X11TR5	22uF	50V		
C 3038	K28179001	CERAMIC CAP.	UP050B102K-A-B	0.001uF	50V	B	
C 3039	K19149021	CERAMIC CAP.	UAT08X473K-L45AE	0.047uF	25V	X	
C 3040	K19149021	CERAMIC CAP.	UAT08X473K-L45AE	0.047uF	25V	X	
C 3041	K28129004	CERAMIC CAP.	EP050X332M-A-B	0.0033uF	16V	X	
C 3042	K46170021	AL. ELECTRO. CAP.	50V100M5X11TR5	10uF	50V		
C 3043	K46170017	AL. ELECTRO. CAP.	50V010M5X11TR5	1uF	50V		
C 3044	K46170017	AL. ELECTRO. CAP.	50V010M5X11TR5	1uF	50V		
C 3045	K46140005	AL. ELECTRO. CAP.	25V101M6X11TR5	100uF	25V		
C 3046	K46170017	AL. ELECTRO. CAP.	50V010M5X11TR5	1uF	50V		
C 3047	K46170021	AL. ELECTRO. CAP.	50V100M5X11TR5	10uF	50V		
C 3048	K46170021	AL. ELECTRO. CAP.	50V100M5X11TR5	10uF	50V		
C 3049	K46170022	AL. ELECTRO. CAP.	50V220M5X11TR5	22uF	50V		

AF Unit

REF.	YAESU P/N	DESCRIPTION	MFGR'S DESIG	VALUE	WV	TOL.	VERS.
C 3050	K46170017	AL. ELECTRO. CAP.	50V010M5X11TR5	1uF	50V		
C 3051	K28129001	CERAMIC CAP.	EP050Y103N-A	0.01uF	16V	Y	
C 3052	K28129001	CERAMIC CAP.	EP050Y103N-A	0.01uF	16V	Y	
C 3053	K28129001	CERAMIC CAP.	EP050Y103N-A	0.01uF	16V	Y	
C 3054	K28129001	CERAMIC CAP.	EP050Y103N-A	0.01uF	16V	Y	
C 3055	K28129001	CERAMIC CAP.	EP050Y103N-A	0.01uF	16V	Y	
C 3056	K46170020	AL. ELECTRO. CAP.	50V4R7M5X11TR5	4.7uF	50V		
C 3058	K28179083	CERAMIC CAP.	UP050B221K-A-B	220pF	50V	B	
C 3059	K46170017	AL. ELECTRO. CAP.	50V010M5X11TR5	1uF	50V		
C 3060	K28129001	CERAMIC CAP.	EP050Y103N-A	0.01uF	16V	Y	
C 3061	K46170017	AL. ELECTRO. CAP.	50V010M5X11TR5	1uF	50V		
C 3062	K46170017	AL. ELECTRO. CAP.	50V010M5X11TR5	1uF	50V		
C 3063	K46170017	AL. ELECTRO. CAP.	50V010M5X11TR5	1uF	50V		
C 3064	K46140005	AL. ELECTRO. CAP.	25V101M6X11TR5	100uF	25V		
C 3065	K28129005	CERAMIC CAP.	EP050X472M-A-B	0.0047uF	16V	X	
C 3066	K46170021	AL. ELECTRO. CAP.	50V100M5X11TR5	10uF	50V		
C 3068	K46170021	AL. ELECTRO. CAP.	50V100M5X11TR5	10uF	50V		
C 3069	K46170021	AL. ELECTRO. CAP.	50V100M5X11TR5	10uF	50V		
C 3070	K28179001	CERAMIC CAP.	UP050B102K-A-B	0.001uF	50V	B	
C 3071	K28179001	CERAMIC CAP.	UP050B102K-A-B	0.001uF	50V	B	
C 3072	K46140004	AL. ELECTRO. CAP.	25V470M5X11TR5	47uF	25V		
C 3073	K46140005	AL. ELECTRO. CAP.	25V101M6X11TR5	100uF	25V		
C 3074	K28129001	CERAMIC CAP.	EP050Y103N-A	0.01uF	16V	Y	
C 3075	K46170021	AL. ELECTRO. CAP.	50V100M5X11TR5	10uF	50V		
C 3076	K46170017	AL. ELECTRO. CAP.	50V010M5X11TR5	1uF	50V		
C 3077	K40129049	AL. ELECTRO. CAP.	RE2-16V471M	470uF	16V		
C 3078	K46170021	AL. ELECTRO. CAP.	50V100M5X11TR5	10uF	50V		
C 3079	K46100006	AL. ELECTRO. CAP.	10V471M8X11TR5	470uF	10V		
C 3080	K46170021	AL. ELECTRO. CAP.	50V100M5X11TR5	10uF	50V		
C 3081	K46170017	AL. ELECTRO. CAP.	50V010M5X11TR5	1uF	50V		
C 3082	K56170063	CAP.	50F2Z104MTP	0.1	50V		
C 3083	K28129001	CERAMIC CAP.	EP050Y103N-A	0.01uF	16V	Y	
C 3084	K28129001	CERAMIC CAP.	EP050Y103N-A	0.01uF	16V	Y	
C 3085	K46170017	AL. ELECTRO. CAP.	50V010M5X11TR5	1uF	50V		
C 3086	K46170017	AL. ELECTRO. CAP.	50V010M5X11TR5	1uF	50V		
C 3087	K46170017	AL. ELECTRO. CAP.	50V010M5X11TR5	1uF	50V		
C 3088	K28179002	CERAMIC CAP.	UP050F473Z-A-B	0.047uF	50V	F	
C 3089	K46170016	AL. ELECTRO. CAP.	50VR47M5X11TR5	0.47uF	50V		
C 3090	K46170020	AL. ELECTRO. CAP.	50V4R7M5X11TR5	4.7uF	50V		
C 3091	K46170021	AL. ELECTRO. CAP.	50V100M5X11TR5	10uF	50V		
C 3092	K46170021	AL. ELECTRO. CAP.	50V100M5X11TR5	10uF	50V		
C 3093	K46170017	AL. ELECTRO. CAP.	50V010M5X11TR5	1uF	50V		
C 3094	K28129001	CERAMIC CAP.	EP050Y103N-A	0.01uF	16V	Y	
C 3095	K28129001	CERAMIC CAP.	EP050Y103N-A	0.01uF	16V	Y	
C 3096	K26170757	CERAMIC CAP.	DD310-979BC333M50	0.033uF	50V	BC	
C 3097	K26170757	CERAMIC CAP.	DD310-979BC333M50	0.033uF	50V	BC	
C 3098	K28179001	CERAMIC CAP.	UP050B102K-A-B	0.001uF	50V	B	
C 3099	K28129001	CERAMIC CAP.	EP050Y103N-A	0.01uF	16V	Y	
C 3100	K46170021	AL. ELECTRO. CAP.	50V100M5X11TR5	10uF	50V		
C 3101	K46170021	AL. ELECTRO. CAP.	50V100M5X11TR5	10uF	50V		
C 3102	K46170021	AL. ELECTRO. CAP.	50V100M5X11TR5	10uF	50V		
C 3103	K28179001	CERAMIC CAP.	UP050B102K-A-B	0.001uF	50V	B	
C 3104	K28179001	CERAMIC CAP.	UP050B102K-A-B	0.001uF	50V	B	
C 3105	K28129001	CERAMIC CAP.	EP050Y103N-A	0.01uF	16V	Y	
C 3106	K28129001	CERAMIC CAP.	EP050Y103N-A	0.01uF	16V	Y	

REF.	YAESU P/N	DESCRIPTION	MFGR'S DESIG	VALUE	WV	TOL.	VERS.
C 3109	K46170018	AL. ELECTRO. CAP.	50V2R2M5X11TR5	2.2uF	50V		
C 3110	K46170017	AL. ELECTRO. CAP.	50V010M5X11TR5	1uF	50V		
C 3111	K46170021	AL. ELECTRO. CAP.	50V100M5X11TR5	10uF	50V		
C 3112	K46170017	AL. ELECTRO. CAP.	50V010M5X11TR5	1uF	50V		
C 3113	K28179003	CERAMIC CAP.	UP050F104Z-A-B	0.1uF	50V	F	
C 3114	K46170017	AL. ELECTRO. CAP.	50V010M5X11TR5	1uF	50V		
C 3115	K46170017	AL. ELECTRO. CAP.	50V010M5X11TR5	1uF	50V		
C 3118	K46170021	AL. ELECTRO. CAP.	50V100M5X11TR5	10uF	50V		
C 3119	K46170017	AL. ELECTRO. CAP.	50V010M5X11TR5	1uF	50V		
C 3120	K28179003	CERAMIC CAP.	UP050F104Z-A-B	0.1uF	50V	F	
C 3121	K28129001	CERAMIC CAP.	EP050Y103N-A	0.01uF	16V	Y	
C 3122	K28179002	CERAMIC CAP.	UP050F473Z-A-B	0.047uF	50V	F	
C 3123	K46170021	AL. ELECTRO. CAP.	50V100M5X11TR5	10uF	50V		
C 3125	K28129001	CERAMIC CAP.	EP050Y103N-A	0.01uF	16V	Y	
C 3127	K46170021	AL. ELECTRO. CAP.	50V100M5X11TR5	10uF	50V		
C 3130	K28129001	CERAMIC CAP.	EP050Y103N-A	0.01uF	16V	Y	
C 3131	K28129001	CERAMIC CAP.	EP050Y103N-A	0.01uF	16V	Y	
C 3133	K28129001	CERAMIC CAP.	EP050Y103N-A	0.01uF	16V	Y	
C 3134	K46170017	AL. ELECTRO. CAP.	50V010M5X11TR5	1uF	50V		
C 3135	K28179028	CERAMIC CAP.	UP050SL270J-A-B	27pF	50V	SL	
C 3136	K28179028	CERAMIC CAP.	UP050SL270J-A-B	27pF	50V	SL	
C 3137	K28129005	CERAMIC CAP.	EP050X472M-A-B	0.0047uF	16V	X	
C 3138	K28179001	CERAMIC CAP.	UP050B102K-A-B	0.001uF	50V	B	
C 3139	K28179001	CERAMIC CAP.	UP050B102K-A-B	0.001uF	50V	B	
C 3140	K46170017	AL. ELECTRO. CAP.	50V010M5X11TR5	1uF	50V		
C 3141	K46170017	AL. ELECTRO. CAP.	50V010M5X11TR5	1uF	50V		
C 3142	K46170021	AL. ELECTRO. CAP.	50V100M5X11TR5	10uF	50V		
C 3143	K28179001	CERAMIC CAP.	UP050B102K-A-B	0.001uF	50V	B	
C 3144	K28179001	CERAMIC CAP.	UP050B102K-A-B	0.001uF	50V	B	
C 3145	K28129001	CERAMIC CAP.	EP050Y103N-A	0.01uF	16V	Y	
C 3146	K28129001	CERAMIC CAP.	EP050Y103N-A	0.01uF	16V	Y	
C 3147	K28129001	CERAMIC CAP.	EP050Y103N-A	0.01uF	16V	Y	
C 3148	K28129001	CERAMIC CAP.	EP050Y103N-A	0.01uF	16V	Y	
C 3149	K46170021	AL. ELECTRO. CAP.	50V100M5X11TR5	10uF	50V		
C 3150	K28129001	CERAMIC CAP.	EP050Y103N-A	0.01uF	16V	Y	
C 3151	K28129001	CERAMIC CAP.	EP050Y103N-A	0.01uF	16V	Y	
C 3152	K46170021	AL. ELECTRO. CAP.	50V100M5X11TR5	10uF	50V		
C 3153	K46170021	AL. ELECTRO. CAP.	50V100M5X11TR5	10uF	50V		
C 3154	K46170021	AL. ELECTRO. CAP.	50V100M5X11TR5	10uF	50V		
C 3155	K46170021	AL. ELECTRO. CAP.	50V100M5X11TR5	10uF	50V		
C 3156	K46170021	AL. ELECTRO. CAP.	50V100M5X11TR5	10uF	50V		
C 3157	K46170021	AL. ELECTRO. CAP.	50V100M5X11TR5	10uF	50V		
C 3158	K46170017	AL. ELECTRO. CAP.	50V010M5X11TR5	1uF	50V		
C 3159	K28179003	CERAMIC CAP.	UP050F104Z-A-B	0.1uF	50V	F	
C 3160	K28129001	CERAMIC CAP.	EP050Y103N-A	0.01uF	16V	Y	
C 3161	K46170017	AL. ELECTRO. CAP.	50V010M5X11TR5	1uF	50V		
C 3163	K46170022	AL. ELECTRO. CAP.	50V220M5X11TR5	22uF	50V		
C 3164	K28179002	CERAMIC CAP.	UP050F473Z-A-B	0.047uF	50V	F	
D 3001	G2060004	DIODE	1SS270TJ				
D 3002	G2060004	DIODE	1SS270TJ				
D 3003	G2060004	DIODE	1SS270TJ				
D 3004	G2060004	DIODE	1SS270TJ				
D 3005	G2060004	DIODE	1SS270TJ				
D 3006	G2060004	DIODE	1SS270TJ				

REF.	YAESU P/N	DESCRIPTION	MFGR'S DESIG	VALUE	WV	TOL.	VERS.
D 3007	G2060004	DIODE	1SS270TJ				
D 3008	G2060004	DIODE	1SS270TJ				
D 3009	G2060004	DIODE	1SS270TJ				
D 3010	G2060004	DIODE	1SS270TJ				
D 3011	G2060004	DIODE	1SS270TJ				
D 3012	G2060004	DIODE	1SS270TJ				
D 3013	G2060004	DIODE	1SS270TJ				
D 3014	G2060004	DIODE	1SS270TJ				
D 3015	G2060004	DIODE	1SS270TJ				
D 3016	G2060004	DIODE	1SS270TJ				
D 3017	G2060004	DIODE	1SS270TJ				
D 3018	G2060004	DIODE	1SS270TJ				
D 3020	G2060004	DIODE	1SS270TJ				
D 3021	G2060004	DIODE	1SS270TJ				
D 3022	G2060004	DIODE	1SS270TJ				
D 3026	G2060004	DIODE	1SS270TJ				
D 3027	G2060004	DIODE	1SS270TJ				
D 3028	G2060004	DIODE	1SS270TJ				
D 3029	G2060004	DIODE	1SS270TJ				
D 3030	G2060004	DIODE	1SS270TJ				
DB3001	G2090247	DIODE	ND487C1-3R				
J 3001	P0090745	CONNECTOR	PCN5D-45PT-1.27DS				
J 3002	P0090744	CONNECTOR	PCN5D-31PT-1.27DS				
JP3001	T9206074	WIRE-ASSY					
JP3003	T9206075	WIRE-ASSY					
JP3005	T9206079	WIRE-ASSY					
JP3007	T9206078	WIRE-ASSY					
L 3001	L1190102	M.RFC	ｽﾄﾀ-104K	100m			
Q 3001	G1090840	IC	M51943BSL				
Q 3002	G3050003	TRANSISTOR	BA1A4P-T				
Q 3003	G3050003	TRANSISTOR	BA1A4P-T				
Q 3004	G1090757	IC	M5224P				
Q 3005	G3050003	TRANSISTOR	BA1A4P-T				
Q 3006	G1091001	IC	MB88202H-635M				
Q 3007	G1091000	IC	MB88202H-634M				
Q 3008	G1090283	IC	UPD4066BC				
Q 3009	G3304584B	TRANSISTOR	2SC458BTZ				
Q 3010	G3304584B	TRANSISTOR	2SC458BTZ				
Q 3011	G3304584B	TRANSISTOR	2SC458BTZ				
Q 3012	G1090988	IC	M5223L				
Q 3013	G1090757	IC	M5224P				
Q 3014	G3050003	TRANSISTOR	BA1A4P-T				
Q 3015	G3050003	TRANSISTOR	BA1A4P-T				
Q 3016	G3304584B	TRANSISTOR	2SC458BTZ				
Q 3017	G3050003	TRANSISTOR	BA1A4P-T				
Q 3018	G3050003	TRANSISTOR	BA1A4P-T				
Q 3019	G3304584B	TRANSISTOR	2SC458BTZ				
Q 3020	G1090283	IC	UPD4066BC				
Q 3021	G3304584B	TRANSISTOR	2SC458BTZ				
Q 3022	G3304584B	TRANSISTOR	2SC458BTZ				
Q 3023	G3408820P	TRANSISTOR	2SD882P				

REF.	YAESU P/N	DESCRIPTION	MFGR'S DESIG	VALUE	WV	TOL.	VERS.
Q 3024	G3304584B	TRANSISTOR	2SC458BTZ				
Q 3025	G3304584B	TRANSISTOR	2SC458BTZ				
Q 3026	G1090769	IC	TDA2003				
Q 3027	G1090381	IC	TA7060AP				
Q 3028	G1090101	IC	UPC1037H				
Q 3029	G3304584B	TRANSISTOR	2SC458BTZ				
Q 3030	G3304584B	TRANSISTOR	2SC458BTZ				
Q 3031	G1090283	IC	UPD4066BC				
Q 3032	G3304584B	TRANSISTOR	2SC458BTZ				
Q 3033	G1090849	IC	UPC78L08J				
Q 3034	G3050003	TRANSISTOR	BA1A4P-T				
Q 3035	G3050005	TRANSISTOR	BA1L4L-T				
Q 3037	G3304584B	TRANSISTOR	2SC458BTZ				
Q 3038	G1090283	IC	UPD4066BC				
Q 3039	G1091240	IC	TBP18S030N LPF				
Q 3040	G1091241	IC	TBP18S030N HPF				
Q 3041	G3304584B	TRANSISTOR	2SC458BTZ				
Q 3042	G3304584B	TRANSISTOR	2SC458BTZ				
Q 3043	G3050005	TRANSISTOR	BA1L4L-T				
Q 3044	G1091095	IC	S3528B				
Q 3045	G1091096	IC	S3529B				
Q 3046	G1091140	IC	M5218AL				
Q 3048	G1091182	IC	UPC79L05J				
Q 3049	G1091140	IC	M5218AL				
Q 3050	G3050005	TRANSISTOR	BA1L4L-T				
Q 3051	G3801040J	FET	2SK104J				
Q 3052	G3050005	TRANSISTOR	BA1L4L-T				
Q 3053	G3111150E	TRANSISTOR	2SA1115E				
R 3001	J07225101	CARBON FILM RES.	RD16TPJ101	100	1/6W		
R 3002	J07225101	CARBON FILM RES.	RD16TPJ101	100	1/6W		
R 3003	J07225103	CARBON FILM RES.	RD16TPJ103	10K	1/6W		
R 3004	J07225335	CARBON FILM RES.	RD16TPJ335	3.3M	1/6W		
R 3005	J07225474	CARBON FILM RES.	RD16TPJ474	470K	1/6W		
R 3007	J07225222	CARBON FILM RES.	RD16TPJ222	2.2K	1/6W		
R 3008	J07225222	CARBON FILM RES.	RD16TPJ222	2.2K	1/6W		
R 3009	J07225182	CARBON FILM RES.	RD16TPJ182	1.8K	1/6W		
R 3010	J07225473	CARBON FILM RES.	RD16TPJ473	47K	1/6W		
R 3011	J07225102	CARBON FILM RES.	RD16TPJ102	1K	1/6W		
R 3012	J07225103	CARBON FILM RES.	RD16TPJ103	10K	1/6W		
R 3013	J07225104	CARBON FILM RES.	RD16TPJ104	100K	1/6W		
R 3014	J07225222	CARBON FILM RES.	RD16TPJ222	2.2K	1/6W		
R 3015	J07225103	CARBON FILM RES.	RD16TPJ103	10K	1/6W		
R 3016	J07225334	CARBON FILM RES.	RD16TPJ334	330K	1/6W		
R 3017	J07225473	CARBON FILM RES.	RD16TPJ473	47K	1/6W		
R 3018	J07225222	CARBON FILM RES.	RD16TPJ222	2.2K	1/6W		
R 3019	J07225101	CARBON FILM RES.	RD16TPJ101	100	1/6W		
R 3020	J07225104	CARBON FILM RES.	RD16TPJ104	100K	1/6W		
R 3021	J07225104	CARBON FILM RES.	RD16TPJ104	100K	1/6W		
R 3022	J07225474	CARBON FILM RES.	RD16TPJ474	470K	1/6W		
R 3023	J07225224	CARBON FILM RES.	RD16TPJ224	220K	1/6W		
R 3024	J07225224	CARBON FILM RES.	RD16TPJ224	220K	1/6W		
R 3025	J07225104	CARBON FILM RES.	RD16TPJ104	100K	1/6W		
R 3026	J07225394	CARBON FILM RES.	RD16TPJ394	390K	1/6W		
R 3027	J07225394	CARBON FILM RES.	RD16TPJ394	390K	1/6W		

AF Unit

REF.	YAESU P/N	DESCRIPTION	MFGR'S DESIG	VALUE	WV	TOL.	VERS.
R 3028	J07225102	CARBON FILM RES.	RD16TPJ102	1K	1/6W		
R 3029	J07225473	CARBON FILM RES.	RD16TPJ473	47K	1/6W		
R 3030	J07225824	CARBON FILM RES.	RD16TPJ824	820K	1/6W		
R 3031	J07225824	CARBON FILM RES.	RD16TPJ824	820K	1/6W		
R 3032	J07225102	CARBON FILM RES.	RD16TPJ102	1K	1/6W		
R 3033	J07225104	CARBON FILM RES.	RD16TPJ104	100K	1/6W		
R 3034	J07225222	CARBON FILM RES.	RD16TPJ222	2.2K	1/6W		
R 3035	J07225103	CARBON FILM RES.	RD16TPJ103	10K	1/6W		
R 3036	J07225103	CARBON FILM RES.	RD16TPJ103	10K	1/6W		
R 3037	J07225103	CARBON FILM RES.	RD16TPJ103	10K	1/6W		
R 3038	J07225472	CARBON FILM RES.	RD16TPJ472	4.7K	1/6W		
R 3041	J07225104	CARBON FILM RES.	RD16TPJ104	100K	1/6W		
R 3042	J07225104	CARBON FILM RES.	RD16TPJ104	100K	1/6W		
R 3043	J07225101	CARBON FILM RES.	RD16TPJ101	100	1/6W		
R 3044	J07225101	CARBON FILM RES.	RD16TPJ101	100	1/6W		
R 3045	J07225101	CARBON FILM RES.	RD16TPJ101	100	1/6W		
R 3046	J07225101	CARBON FILM RES.	RD16TPJ101	100	1/6W		
R 3047	J07225473	CARBON FILM RES.	RD16TPJ473	47K	1/6W		
R 3048	J07225103	CARBON FILM RES.	RD16TPJ103	10K	1/6W		
R 3049	J07225222	CARBON FILM RES.	RD16TPJ222	2.2K	1/6W		
R 3050	J07225104	CARBON FILM RES.	RD16TPJ104	100K	1/6W		
R 3051	J07225472	CARBON FILM RES.	RD16TPJ472	4.7K	1/6W		
R 3052	J07225335	CARBON FILM RES.	RD16TPJ335	3.3M	1/6W		
R 3053	J07225102	CARBON FILM RES.	RD16TPJ102	1K	1/6W		
R 3054	J07225332	CARBON FILM RES.	RD16TPJ332	3.3K	1/6W		
R 3055	J07225332	CARBON FILM RES.	RD16TPJ332	3.3K	1/6W		
R 3056	J07225123	CARBON FILM RES.	RD16TPJ123	12K	1/6W		
R 3058	J07225332	CARBON FILM RES.	RD16TPJ332	3.3K	1/6W		
R 3059	J07225332	CARBON FILM RES.	RD16TPJ332	3.3K	1/6W		
R 3060	J07225123	CARBON FILM RES.	RD16TPJ123	12K	1/6W		
R 3061	J07225102	CARBON FILM RES.	RD16TPJ102	1K	1/6W		
R 3062	J07225473	CARBON FILM RES.	RD16TPJ473	47K	1/6W		
R 3063	J07225332	CARBON FILM RES.	RD16TPJ332	3.3K	1/6W		
R 3064	J07225472	CARBON FILM RES.	RD16TPJ472	4.7K	1/6W		
R 3065	J07225472	CARBON FILM RES.	RD16TPJ472	4.7K	1/6W		
R 3066	J07225332	CARBON FILM RES.	RD16TPJ332	3.3K	1/6W		
R 3067	J07225105	CARBON FILM RES.	RD16TPJ105	1M	1/6W		
R 3068	J07225101	CARBON FILM RES.	RD16TPJ101	100	1/6W		
R 3069	J07225472	CARBON FILM RES.	RD16TPJ472	4.7K	1/6W		
R 3070	J07225104	CARBON FILM RES.	RD16TPJ104	100K	1/6W		
R 3071	J07225472	CARBON FILM RES.	RD16TPJ472	4.7K	1/6W		
R 3072	J07225101	CARBON FILM RES.	RD16TPJ101	100	1/6W		
R 3073	J07225102	CARBON FILM RES.	RD16TPJ102	1K	1/6W		
R 3074	J07225183	CARBON FILM RES.	RD16TPJ183	18K	1/6W		
R 3075	J07225473	CARBON FILM RES.	RD16TPJ473	47K	1/6W		
R 3076	J07225221	CARBON FILM RES.	RD16TPJ221	220	1/6W		
R 3077	J07225222	CARBON FILM RES.	RD16TPJ222	2.2K	1/6W		
R 3078	J07225154	CARBON FILM RES.	RD16TPJ154	150K	1/6W		
R 3079	J07225101	CARBON FILM RES.	RD16TPJ101	100	1/6W		
R 3080	J07225332	CARBON FILM RES.	RD16TPJ332	3.3K	1/6W		
R 3081	J07225123	CARBON FILM RES.	RD16TPJ123	12K	1/6W		
R 3082	J07225123	CARBON FILM RES.	RD16TPJ123	12K	1/6W		
R 3083	J07225183	CARBON FILM RES.	RD16TPJ183	18K	1/6W		
R 3084	J07225103	CARBON FILM RES.	RD16TPJ103	10K	1/6W		
R 3085	J07225473	CARBON FILM RES.	RD16TPJ473	47K	1/6W		

REF.	YAESU P/N	DESCRIPTION	MFGR'S DESIG	VALUE	WV	TOL.	VERS.
R 3086	J07225823	CARBON FILM RES.	RD16TPJ823	82K	1/6W		
R 3087	J07225103	CARBON FILM RES.	RD16TPJ103	10K	1/6W		
R 3088	J07225123	CARBON FILM RES.	RD16TPJ123	12K	1/6W		
R 3089	J07225183	CARBON FILM RES.	RD16TPJ183	18K	1/6W		
R 3090	J07225473	CARBON FILM RES.	RD16TPJ473	47K	1/6W		
R 3091	J07225224	CARBON FILM RES.	RD16TPJ224	220K	1/6W		
R 3092	J20306339	METAL FILM RES.	RS1B 1W K 3.3	3.3	1W		
R 3093	J07225103	CARBON FILM RES.	RD16TPJ103	10K	1/6W		
R 3094	J07225102	CARBON FILM RES.	RD16TPJ102	1K	1/6W		
R 3095	J07225224	CARBON FILM RES.	RD16TPJ224	220K	1/6W		
R 3096	J07225332	CARBON FILM RES.	RD16TPJ332	3.3K	1/6W		
R 3097	J07225102	CARBON FILM RES.	RD16TPJ102	1K	1/6W		
R 3098	J07225332	CARBON FILM RES.	RD16TPJ332	3.3K	1/6W		
R 3099	J07225820	CARBON FILM RES.	RD16TPJ820	82	1/6W		
R 3100	J07225223	CARBON FILM RES.	RD16TPJ223	22K	1/6W		
R 3101	J07225221	CARBON FILM RES.	RD16TPJ221	220	1/6W		
R 3102	J07225222	CARBON FILM RES.	RD16TPJ222	2.2K	1/6W		
R 3103	J07225222	CARBON FILM RES.	RD16TPJ222	2.2K	1/6W		
R 3104	J07225103	CARBON FILM RES.	RD16TPJ103	10K	1/6W		
R 3105	J07225101	CARBON FILM RES.	RD16TPJ101	100	1/6W		
R 3106	J07225471	CARBON FILM RES.	RD16TPJ471	470	1/6W		
R 3107	J07225102	CARBON FILM RES.	RD16TPJ102	1K	1/6W		
R 3108	J07225473	CARBON FILM RES.	RD16TPJ473	47K	1/6W		
R 3109	J07225104	CARBON FILM RES.	RD16TPJ104	100K	1/6W		
R 3110	J07225104	CARBON FILM RES.	RD16TPJ104	100K	1/6W		
R 3111	J07225103	CARBON FILM RES.	RD16TPJ103	10K	1/6W		
R 3112	J07225101	CARBON FILM RES.	RD16TPJ101	100	1/6W		
R 3113	J07225101	CARBON FILM RES.	RD16TPJ101	100	1/6W		
R 3114	J07225101	CARBON FILM RES.	RD16TPJ101	100	1/6W		
R 3115	J07225010	CARBON FILM RES.	RD16TPJ010	1	1/6W		
R 3116	J07225221	CARBON FILM RES.	RD16TPJ221	220	1/6W		
R 3117	J07225473	CARBON FILM RES.	RD16TPJ473	47K	1/6W		
R 3118	J07225102	CARBON FILM RES.	RD16TPJ102	1K	1/6W		
R 3119	J07225104	CARBON FILM RES.	RD16TPJ104	100K	1/6W		
R 3120	J07225104	CARBON FILM RES.	RD16TPJ104	100K	1/6W		
R 3121	J07225102	CARBON FILM RES.	RD16TPJ102	1K	1/6W		
R 3122	J07225101	CARBON FILM RES.	RD16TPJ101	100	1/6W		
R 3123	J07225479	CARBON FILM RES.	RD16TPJ4R7	4.7	1/6W		
R 3124	J07225154	CARBON FILM RES.	RD16TPJ154	150K	1/6W		
R 3125	J07225102	CARBON FILM RES.	RD16TPJ102	1K	1/6W		
R 3126	J07225332	CARBON FILM RES.	RD16TPJ332	3.3K	1/6W		
R 3127	J07225681	CARBON FILM RES.	RD16TPJ681	680	1/6W		
R 3128	J07225222	CARBON FILM RES.	RD16TPJ222	2.2K	1/6W		
R 3129	J07225221	CARBON FILM RES.	RD16TPJ221	220	1/6W		
R 3130	J07225473	CARBON FILM RES.	RD16TPJ473	47K	1/6W		
R 3131	J07225683	CARBON FILM RES.	RD16TPJ683	68K	1/6W		
R 3132	J07225151	CARBON FILM RES.	RD16TPJ151	150	1/6W		
R 3133	J07225331	CARBON FILM RES.	RD16TPJ331	330	1/6W		
R 3134	J07225472	CARBON FILM RES.	RD16TPJ472	4.7K	1/6W		
R 3135	J07225102	CARBON FILM RES.	RD16TPJ102	1K	1/6W		
R 3136	J07225153	CARBON FILM RES.	RD16TPJ153	15K	1/6W		
R 3137	J07225471	CARBON FILM RES.	RD16TPJ471	470	1/6W		
R 3138	J07225222	CARBON FILM RES.	RD16TPJ222	2.2K	1/6W		
R 3139	J07225221	CARBON FILM RES.	RD16TPJ221	220	1/6W		
R 3140	J07225222	CARBON FILM RES.	RD16TPJ222	2.2K	1/6W		

REF.	YAESU P/N	DESCRIPTION	MFGR'S DESIG	VALUE	WV	TOL.	VERS.
R 3141	J07225103	CARBON FILM RES.	RD16TPJ103	10K	1/6W		
R 3142	J07225103	CARBON FILM RES.	RD16TPJ103	10K	1/6W		
R 3143	J07225103	CARBON FILM RES.	RD16TPJ103	10K	1/6W		
R 3144	J07225103	CARBON FILM RES.	RD16TPJ103	10K	1/6W		
R 3145	J07225103	CARBON FILM RES.	RD16TPJ103	10K	1/6W		
R 3146	J07225103	CARBON FILM RES.	RD16TPJ103	10K	1/6W		
R 3148	J07225103	CARBON FILM RES.	RD16TPJ103	10K	1/6W		
R 3149	J07225103	CARBON FILM RES.	RD16TPJ103	10K	1/6W		
R 3153	J07225103	CARBON FILM RES.	RD16TPJ103	10K	1/6W		
R 3154	J07225103	CARBON FILM RES.	RD16TPJ103	10K	1/6W		
R 3156	J07225683	CARBON FILM RES.	RD16TPJ683	68K	1/6W		
R 3157	J07225101	CARBON FILM RES.	RD16TPJ101	100	1/6W		
R 3158	J07225101	CARBON FILM RES.	RD16TPJ101	100	1/6W		
R 3159	J07225101	CARBON FILM RES.	RD16TPJ101	100	1/6W		
R 3160	J07225473	CARBON FILM RES.	RD16TPJ473	47K	1/6W		
R 3161	J07225222	CARBON FILM RES.	RD16TPJ222	2.2K	1/6W		
R 3162	J07225104	CARBON FILM RES.	RD16TPJ104	100K	1/6W		
R 3163	J07225473	CARBON FILM RES.	RD16TPJ473	47K	1/6W		
R 3164	J07225471	CARBON FILM RES.	RD16TPJ471	470	1/6W		
R 3165	J07225472	CARBON FILM RES.	RD16TPJ472	4.7K	1/6W		
R 3166	J07225101	CARBON FILM RES.	RD16TPJ101	100	1/6W		
R 3167	J07225472	CARBON FILM RES.	RD16TPJ472	4.7K	1/6W		
R 3169	J07225473	CARBON FILM RES.	RD16TPJ473	47K	1/6W		
R 3170	J07225104	CARBON FILM RES.	RD16TPJ104	100K	1/6W		
R 3171	J07225332	CARBON FILM RES.	RD16TPJ332	3.3K	1/6W		
R 3177	J07225820	CARBON FILM RES.	RD16TPJ820	82	1/6W		
R 3178	J07225103	CARBON FILM RES.	RD16TPJ103	10K	1/6W		
R 3179	J07225103	CARBON FILM RES.	RD16TPJ103	10K	1/6W		
R 3182	J07225103	CARBON FILM RES.	RD16TPJ103	10K	1/6W		
R 3183	J07225105	CARBON FILM RES.	RD16TPJ105	1M	1/6W		
R 3184	J07225332	CARBON FILM RES.	RD16TPJ332	3.3K	1/6W		
R 3185	J07225560	CARBON FILM RES.	RD16TPJ560	56	1/6W		
R 3187	J07225102	CARBON FILM RES.	RD16TPJ102	1K	1/6W		
R 3188	J07225471	CARBON FILM RES.	RD16TPJ471	470	1/6W		
R 3191	J07225103	CARBON FILM RES.	RD16TPJ103	10K	1/6W		
R 3192	J07225103	CARBON FILM RES.	RD16TPJ103	10K	1/6W		
R 3195	J07225104	CARBON FILM RES.	RD16TPJ104	100K	1/6W		
R 3196	J07225103	CARBON FILM RES.	RD16TPJ103	10K	1/6W		
R 3198	J07225473	CARBON FILM RES.	RD16TPJ473	47K	1/6W		
R 3199	J07225393	CARBON FILM RES.	RD16TPJ393	39K	1/6W		
R 3200	J07225223	CARBON FILM RES.	RD16TPJ223	22K	1/6W		
R 3202	J07225223	CARBON FILM RES.	RD16TPJ223	22K	1/6W		
R 3204	J07225223	CARBON FILM RES.	RD16TPJ223	22K	1/6W		
R 3205	J07225103	CARBON FILM RES.	RD16TPJ103	10K	1/6W		
R 3206	J07225393	CARBON FILM RES.	RD16TPJ393	39K	1/6W		
R 3207	J07225223	CARBON FILM RES.	RD16TPJ223	22K	1/6W		
R 3208	J07225105	CARBON FILM RES.	RD16TPJ105	1M	1/6W		
R 3209	J07225101	CARBON FILM RES.	RD16TPJ101	100	1/6W		
R 3211	J07225223	CARBON FILM RES.	RD16TPJ223	22K	1/6W		
R 3212	J07225223	CARBON FILM RES.	RD16TPJ223	22K	1/6W		
R 3213	J07225223	CARBON FILM RES.	RD16TPJ223	22K	1/6W		
R 3214	J07225223	CARBON FILM RES.	RD16TPJ223	22K	1/6W		
R 3215	J07225473	CARBON FILM RES.	RD16TPJ473	47K	1/6W		
R 3217	J07225472	CARBON FILM RES.	RD16TPJ472	4.7K	1/6W		
R 3218	J07225332	CARBON FILM RES.	RD16TPJ332	3.3K	1/6W		

REF.	YAESU P/N	DESCRIPTION	MFGR'S DESIG	VALUE	WV	TOL.	VERS.
R 3219	J07225101	CARBON FILM RES.	RD16TPJ101	100	1/6W		
R 3220	J07225101	CARBON FILM RES.	RD16TPJ101	100	1/6W		
R 3221	J07225101	CARBON FILM RES.	RD16TPJ101	100	1/6W		
R 3222	J07225101	CARBON FILM RES.	RD16TPJ101	100	1/6W		
R 3223	J07225183	CARBON FILM RES.	RD16TPJ183	18K	1/6W		
R 3224	J07225103	CARBON FILM RES.	RD16TPJ103	10K	1/6W		
R 3225	J07225223	CARBON FILM RES.	RD16TPJ223	22K	1/6W		
R 3226	J07225102	CARBON FILM RES.	RD16TPJ102	1K	1/6W		
R 3227	J07225154	CARBON FILM RES.	RD16TPJ154	150K	1/6W		
R 3228	J07225473	CARBON FILM RES.	RD16TPJ473	47K	1/6W		
R 3229	J07225683	CARBON FILM RES.	RD16TPJ683	68K	1/6W		
R 3230	J07225472	CARBON FILM RES.	RD16TPJ472	4.7K	1/6W		
R 3231	J07225104	CARBON FILM RES.	RD16TPJ104	100K	1/6W		
R 3232	J07225182	CARBON FILM RES.	RD16TPJ182	1.8K	1/6W		
R 3233	J07225473	CARBON FILM RES.	RD16TPJ473	47K	1/6W		
S 3001	N6090051	SLIDE SWITCH	SSS212299				
T 3001	L0020788A	COIL	4-1 2D3 TR6X3				
TP3001	Q5000050	TP-K	IPS-1136				
TP3002	Q5000050	TP-K	IPS-1136				
TP3003	Q5000050	TP-K	IPS-1136				
VR3001	J50784103	POT.	EVN-DCAA03B14	10K			
VR3002	J50784504	POT.	EVN-DCAA03B55	500K			
VR3003	J50784103	POT.	EVN-DCAA03B14	10K			
VR3004	J51783102	POT.	EVN-DXAA03B13	1K			
VR3005	J50784103	POT.	EVN-DCAA03B14	10K			
VR3006	J51783102	POT.	EVN-DXAA03B13	1K			
VR3007	J50784202	POT.	EVN-DCAA03B23	2K			
VR3008	J50784103	POT.	EVN-DCAA03B14	10K			
VR3009	J50784103	POT.	EVN-DCAA03B14	10K			
VR3010	J51783102	POT.	EVN-DXAA03B13	1K			
VR3011	J50784103	POT.	EVN-DCAA03B14	10K			
VR3012	J50784103	POT.	EVN-DCAA03B14	10K			
VR3013	J51783103	POT.	EVN-DCAA03B14	10K			
VR3014	J51783103	POT.	EVN-DCAA03B14	10K			
VR3015	J51783102	POT.	EVN-DXAA03B13	1K			
VR3016	J51783201	POT.	EVN-DXAA03B22	200			
VR3017	J51783502	POT.	EVN-DXAA03B53	5K			
VR3018	J51783102	POT.	EVN-DXAA03B13	1K			
VR3019	J51783102	POT.	EVN-DXAA03B13	1K			
X 3001	H0102409	XTAL		7.20MHZ			
X 3002	H7900170	CERAMIC OSC	CSA4.00MG5				
	Q9000548	THERMAL CONDUCTOR	45T-TO-220				
	R0137420	HEATSINK PLATE					
	R0134490	FITTING					
	R0136960	FITTING R					
	R0136970	FITTING L					

Notes:

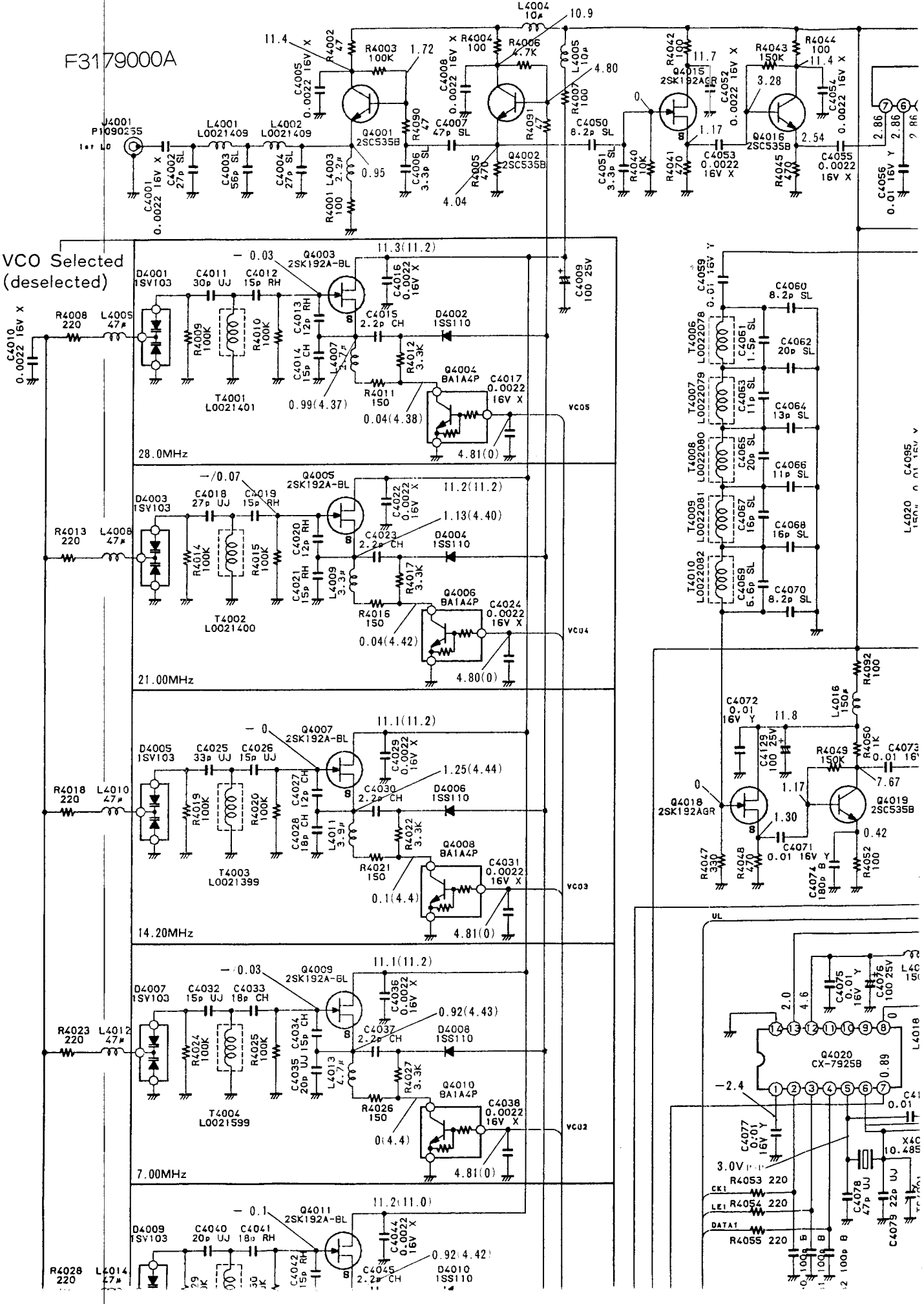
F3179000A
VCO Selected
(deselected)
28.0MHz
21.00MHz
14.20MHz
7.00MHz
Q4020
CX-79258
Q4018
2SK192AGR
Q4019
2SC535B
T4001
L0021401
T4002
L0021400
T4003
L0021399
T4004
L0021599
T4006
L0022078
T4007
L0022079
T4008
L0022080
T4009
L0022081
T4010
L0022082
3.0Vp-p
CK1
LE1
DATA1
R4053 220
R4054 220
R4055 220

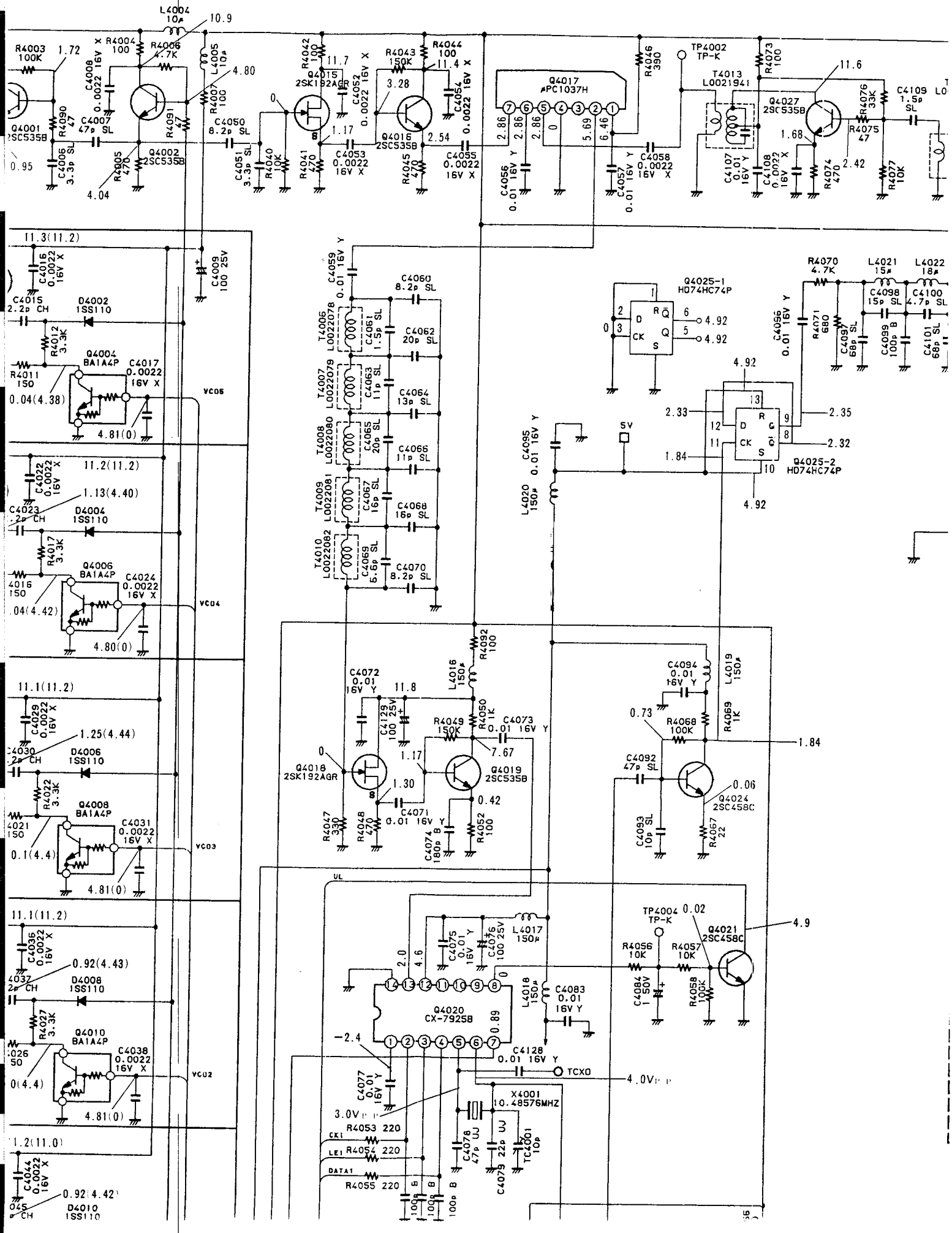
L4004 10µ
10.9
R4003 100K
1.72
R4004 100
R4006 4.7K
L4005 10µ
4.80
C4008 0.0022 16V X
R4007 100
Q4001 2SC535B
R4090 47
C4007 47p SL
R4091 47
C4006 3.3p SL
0.95
R4005 470
Q4002 2SC535B
4.04
C4050 8.2p SL
C4051 3.3p SL
R4040 10K
R4042 100
11.7
Q4015 2SK192AGR
C4052 0.0022 16V X
R4041 470
C4053 0.0022 16V X
R4043 150K
R4044 100
11.4 X
3.28
C4054 0.0022 16V X
Q4016 2SC535B
2.54
R4045 470
C4055 0.0022 16V X
Q4017 µPC1037H
2.86
2.86
0
5.69
6.46
C4056 0.01 16V Y
C4057 0.01 16V Y
R4046 390
C4058 0.0022 16V X
TP4002 TP-K
T4013 L0021941
R4073 100
11.6
Q4027 2SC535B
R4076 33K
C4109 1.5p SL
R4075 47
1.68
2.42
C4107 0.01 16V Y
C4108 0.0022 16V X
R4074 470
R4077 10K
11.3(11.2)
C4016 0.0022 16V X
C4009 100 25V
C4015 2.2p CH
D4002 1SS110
R4012 3.3K
Q4004 BA1A4P
C4017 0.0022 16V X
R4011 150
0.04(4.38)
VCO5
4.81(0)
C4059 0.01 16V Y
C4060 8.2p SL
T4006 L0022078
C4061 1.5p SL
C4062 20p SL
T4007 L0022079
C4063 11p SL
C4064 13p SL
T4008 L0022080
C4065 20p SL
C4066 11p SL
T4009 L0022081
C4067 16p SL
C4068 16p SL
T4010 L0022082
C4069 5.6p SL
C4070 8.2p SL
Q4025-1 HD74HC74P
4.92
4.92
R4070 4.7K
L4021 15µ
L4022 18µ
C4098 15p SL
C4100 4.7p SL
C4056 0.01 16V Y
R4071 680
C4097 68p SL
C4099 100p B
C4101 68p SL
4.92
2.33
2.35
2.32
1.84
C4095 0.01 16V Y
5V
L4020 150µ
Q4025-2 HD74HC74P
4.92
11.2(11.2)
C4022 0.0022 16V X
1.13(4.40)
C4023 2.2p CH
D4004 1SS110
R4017 3.3K
Q4006 BA1A4P
C4024 0.0022 16V X
VCO4
4.80(0)
11.1(11.2)
C4029 0.0022 16V X
1.25(4.44)
C4030 2.2p CH
D4006 1SS110
R4022 3.3K
Q4008 BA1A4P
C4031 0.0022 16V X
VCO3
0.1(4.4)
4.81(0)
R4092 100
L4016 150µ
C4072 0.01 16V Y
11.8
C4129 100 25V
R4049 150K
R4050 1K
C4073 0.01 16V Y
7.67
Q4018 2SK192AGR
1.17
Q4019 2SC535B
1.30
0.42
C4071 0.01 16V Y
R4047 330
R4048 470
C4074 180p B
R4052 100
C4094 0.01 16V Y
L4019 150µ
0.73
R4068 100K
R4069 1K
1.84
C4092 47p SL
0.06
Q4024 2SC458C
C4093 10p SL
R4067 22
11.1(11.2)
C4036 0.0022 16V X
0.92(4.43)
C4037 2.2p CH
D4008 1SS110
R4027 3.3K
Q4010 BA1A4P
C4038 0.0022 16V X
VCO2
4.81(0)
UL
TP4004 TP-K
0.02
4.9
C4075 0.01 16V Y
C4076 100 25V
L4017 150µ
2.0
4.6
R4056 10K
R4057 10K
Q4021 2SC458C
C4084 1 50V
R4058 100K
L4018 150µ
C4083 0.01 16V Y
Q4020 CX-79258B
0.89
-2.4
C4128 0.01 16V Y
TCXO
4.0Vp-p
C4077 0.01 16V Y
3.0Vp-p
X4001 10.48576MHZ
C4078 47p UJ
C4079 22p UJ
TC4001 10p
R4053 220
R4054 220
R4055 220
CK1
LE1
DATA1
100p B
100p B
100p B
1.2(11.0)
C4044 0.0022 16V X
0.92(4.42)
D4010 1SS110

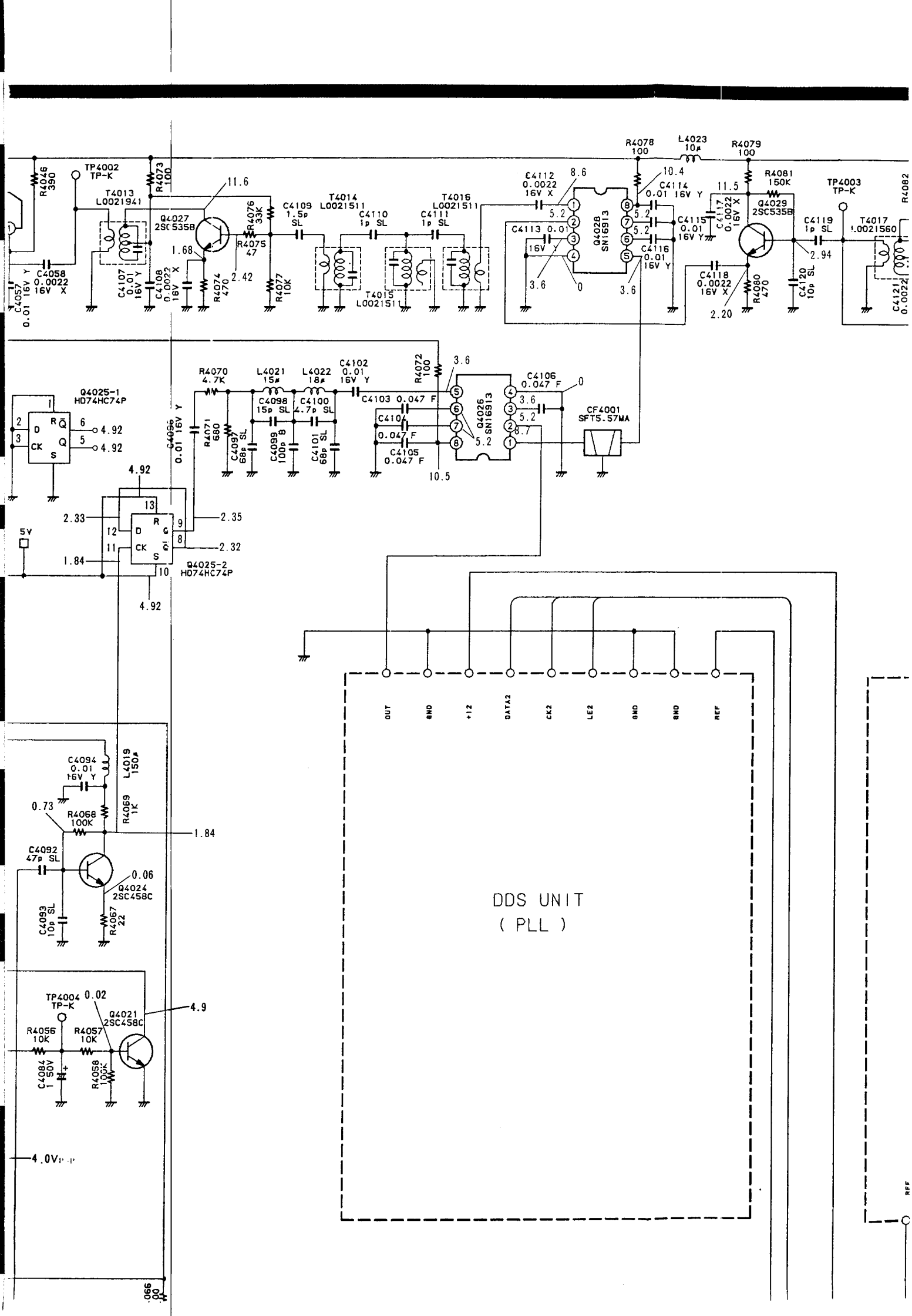
R4078 100
L4023 10μ
R4079 100
TP4002 TP-K
R4073 100
R4046 390
T4013 L0021941
Q4027 2SC535B
R4076 33K
R4075 47
R4074 470
R4077 10K
C4109 1.5p SL
T4014 L0021511
C4110 1p SL
T4015 L0021511
C4111 1p SL
T4016 L0021511
C4112 0.0022 16V X
Q4028 SN16913
C4113 0.01 16V Y
C4114 0.01 16V Y
C4115 0.01 16V Y
C4116 0.01 16V Y
C4117 0.0022 16V X
C4118 0.0022 16V X
R4081 150K
Q4029 2SC535B
R4080 470
C4119 1p SL
C4120 10p SL
TP4003 TP-K
T4017 L0021560
R4082
C4121 0.0022
C4057 0.01 16V Y
C4058 0.0022 16V X
C4107 0.01 16V Y
C4108 0.0022 16V X
R4070 4.7K
L4021 15μ
L4022 18μ
C4102 0.01 16V Y
R4072 100
C4098 15p SL
C4100 4.7p SL
C4103 0.047 F
C4104 0.047 F
C4105 0.047 F
Q4026 SN16913
C4106 0.047 F
CF4001 SFT5.5?MA
C4096 0.01 16V Y
R4071 680
C4097 68p SL
C4099 100p B
C4101 68p SL
Q4025-1 HD74HC74P
Q4025-2 HD74HC74P
5V
DDS UNIT
(PLL)
OUT
GND
+12
DATA2
CK2
LE2
GND
GND
REF
C4094 0.01 16V Y
L4019 150μ
R4069 1K
R4068 100K
C4092 47p SL
Q4024 2SC458C
C4093 10p SL
R4067 22
TP4004 TP-K
0.02
Q4021 2SC458C
R4056 10K
R4057 10K
C4084 1 50V
R4058 100K
4.0Vp-p
REF

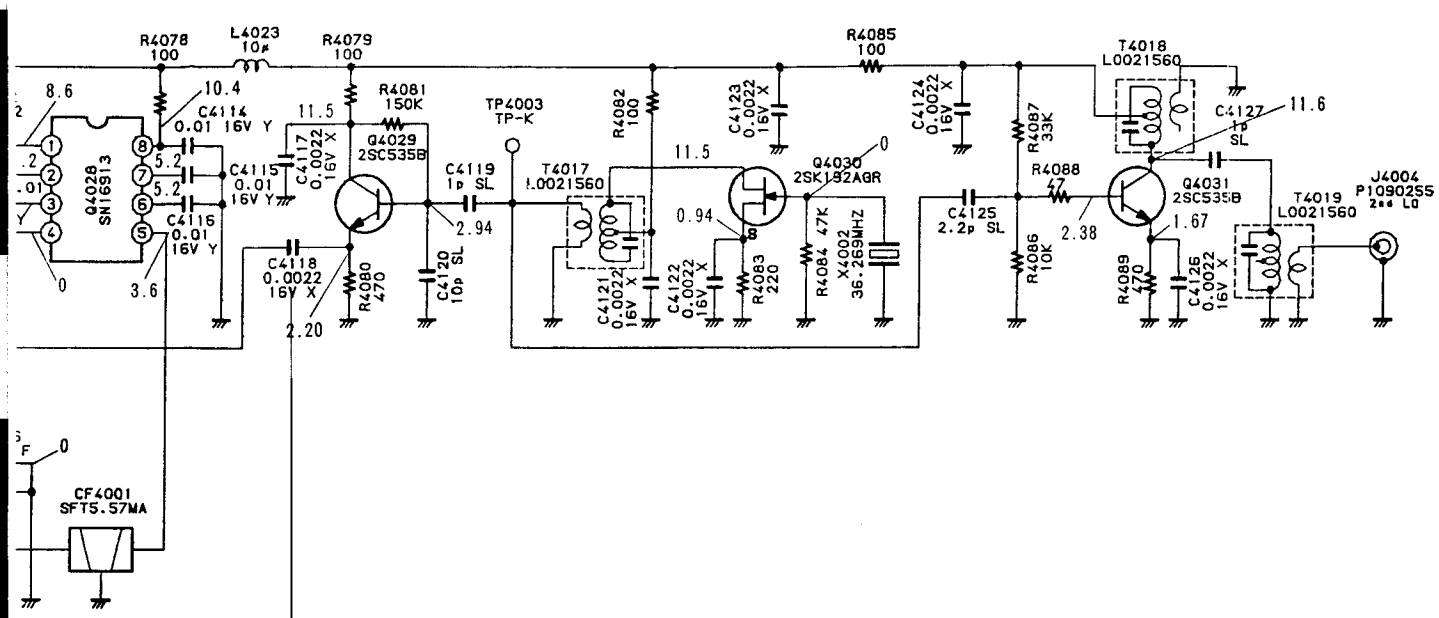
R4078 100
L4023 10µ
R4079 100
R4085 100
T4018 L0021560
8.6
10.4
C4114 0.01 16V Y
11.5
R4081 150K
TP4003 TP-K
R4082 100
C4123 0.0022 16V X
C4124 0.0022 16V X
R4087 33K
C4127 1p SL
11.6
Q4028 SN16913
5.2
C4115 0.01 16V Y
C4117 0.0022 16V X
Q4029 2SC535B
C4119 1p SL
T4017 L0021560
11.5
Q4030 2SK192AGR
R4088 47
Q4031 2SC535B
J4004 P1090255
C4116 0.01 16V Y
2.94
0.94
C4125 2.2p SL
2.38
T4019 L0021560
C4118 0.0022 16V X
C4120 10p SL
C4121 0.0022 16V X
C4122 0.0022 16V X
R4083 220
R4084 47K
X4002 36.269MHZ
R4086 10K
1.67
R4089 470
C4126 0.0022 16V X
3.6
2.20
R4080 470
CF4001 SFT5.57MA

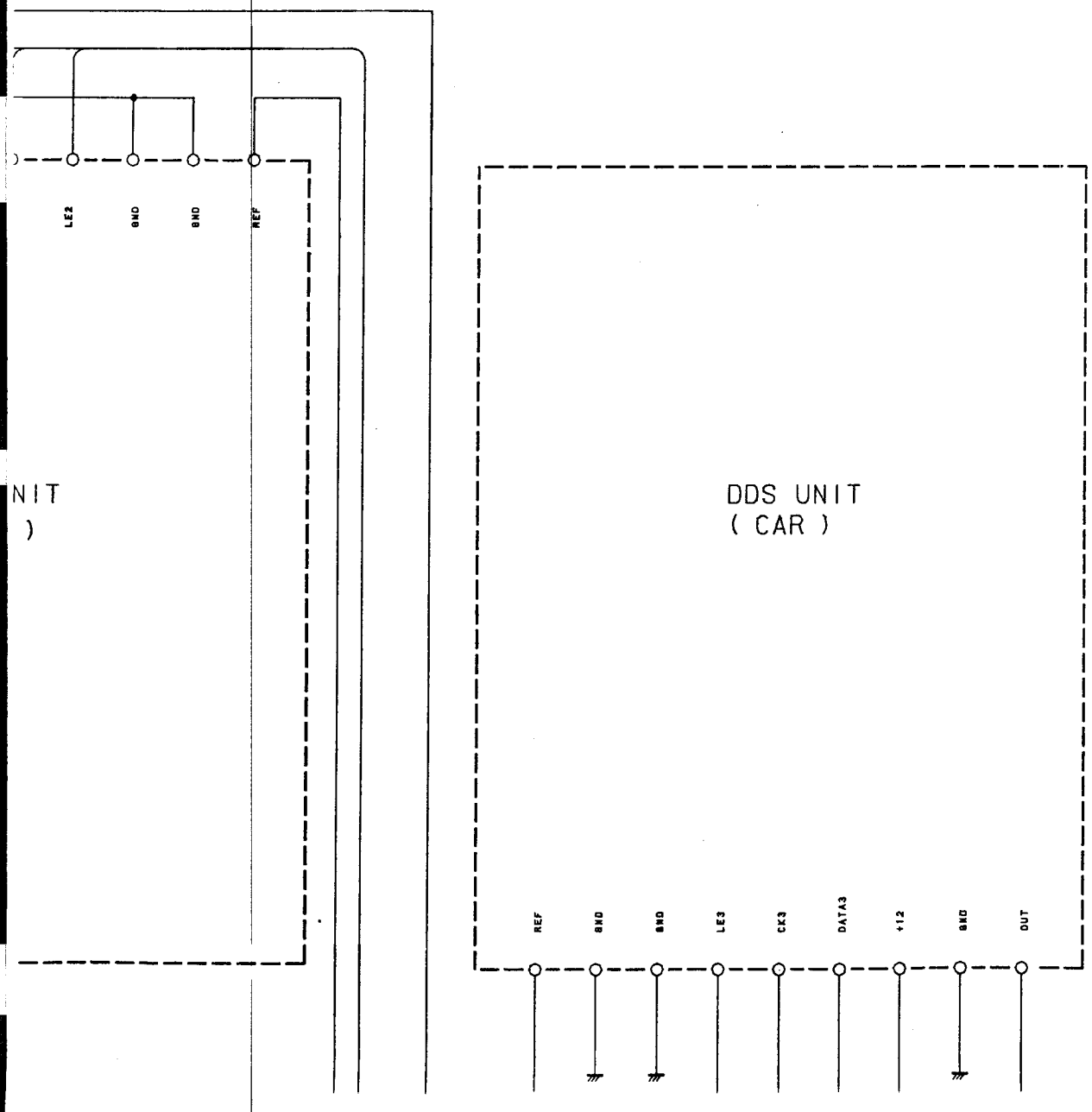
LE2
GND
GND
REF
NIT
)
DDS UNIT
(CAR)
REF
GND
GND
LE3
CK3
DATA3
+12
GND
OUT

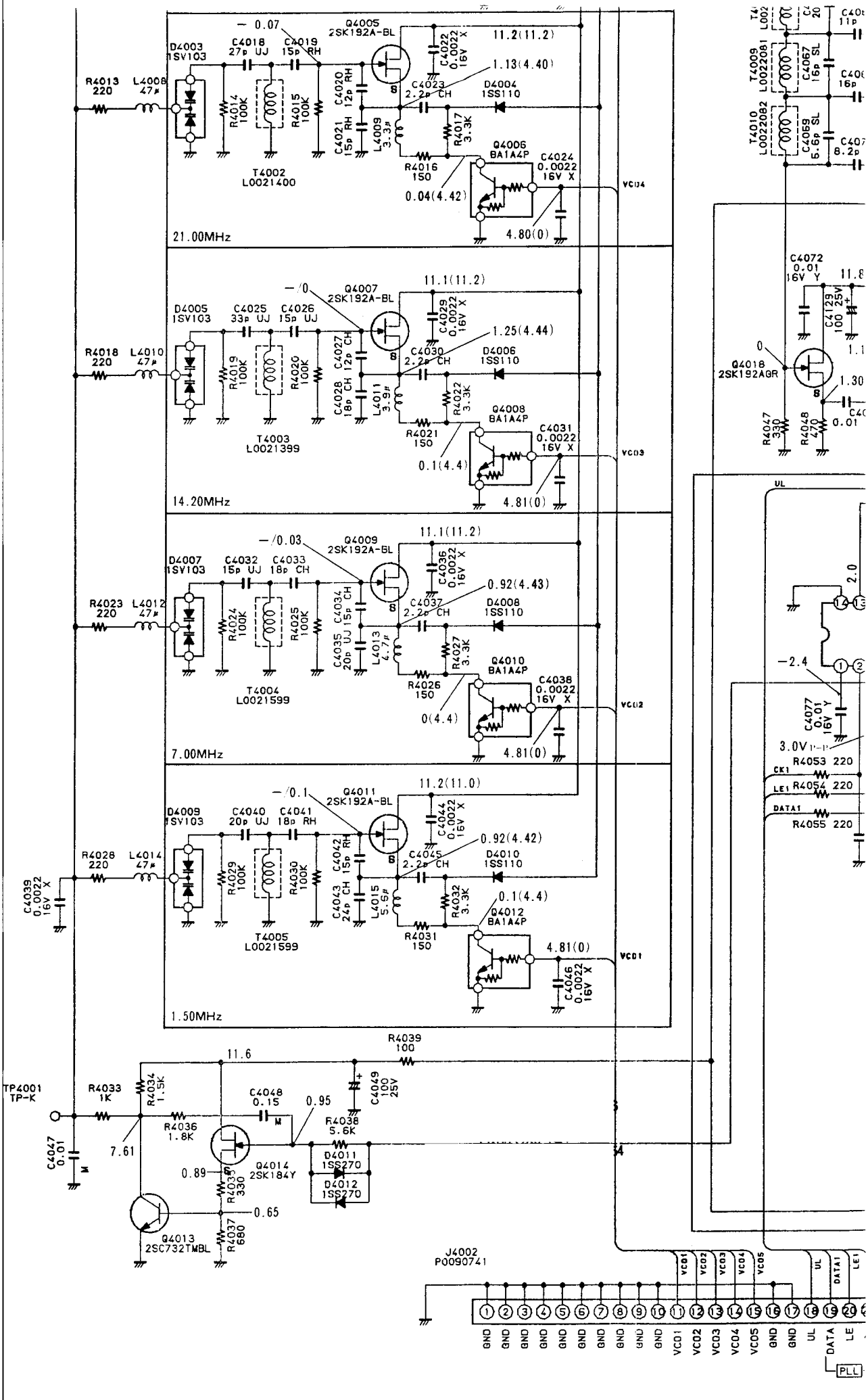

21.00MHz
14.20MHz
7.00MHz
1.50MHz
Q4005 2SK192A-BL
Q4007 2SK192A-BL
Q4009 2SK192A-BL
Q4011 2SK192A-BL
Q4006 BA1A4P
Q4008 BA1A4P
Q4010 BA1A4P
Q4012 BA1A4P
Q4018 2SK192AGR
Q4014 2SK184Y
Q4013 2SC732TMBL
T4002 L0021400
T4003 L0021399
T4004 L0021599
T4005 L0021599
T4009 L0022081
T4010 L0022082
TP4001 TP-K
J4002 P0090741
VCO1
VCO2
VCO3
VCO4
VCO5
UL
DATA
LE
PLL

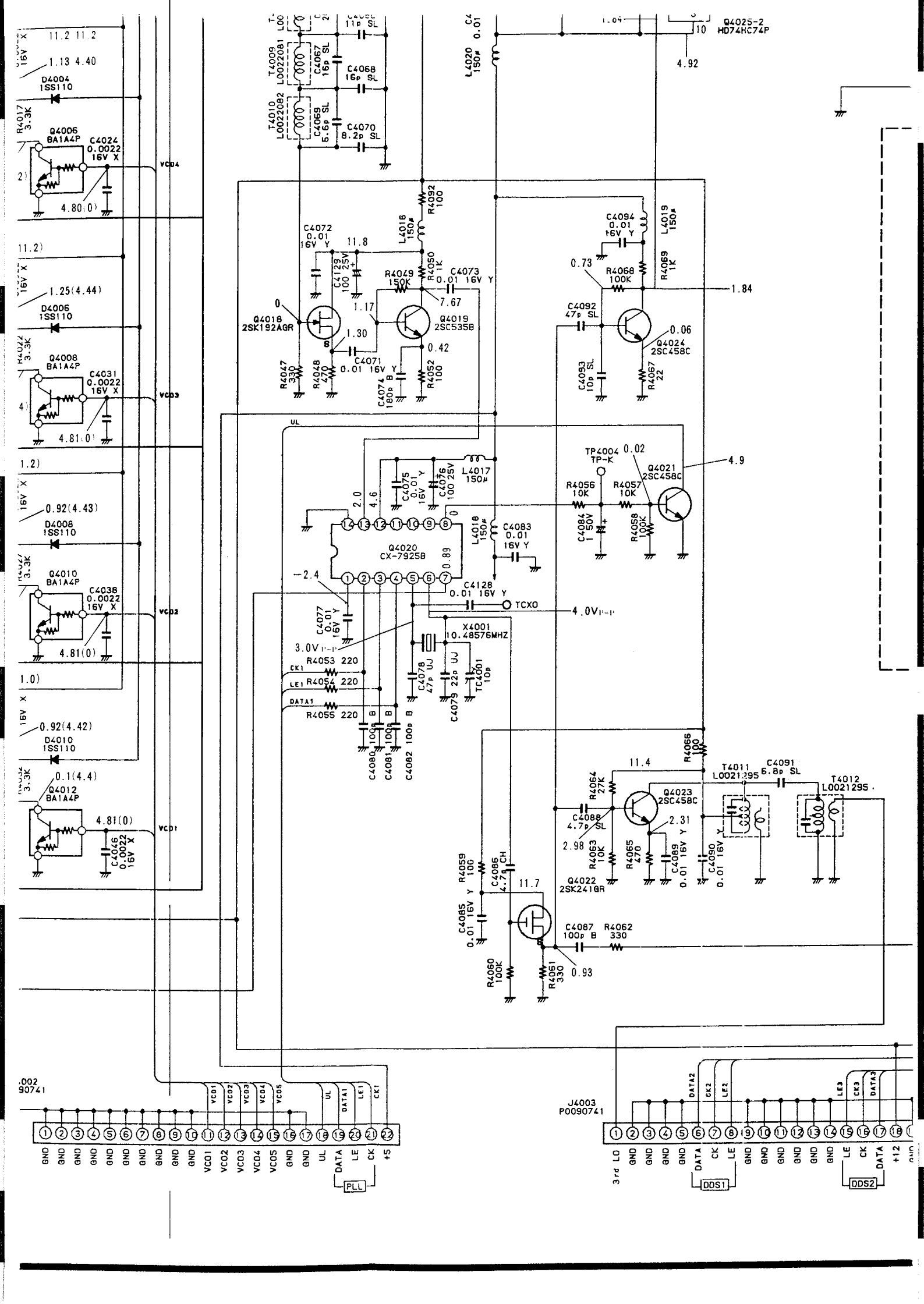

Q4025-2
HD74HC74P
T4009
L0022081
T4010
L0022082
C4067
16p SL
C4068
16p SL
C4069
5.6p SL
C4070
8.2p SL
L4020
150μ
D4004
1SS110
Q4006
BA1A4P
C4024
0.0022
16V X
VCO4
4.80(0)
D4006
1SS110
Q4008
BA1A4P
C4031
0.0022
16V X
VCO3
4.81(0)
D4008
1SS110
Q4010
BA1A4P
C4038
0.0022
16V X
VCO2
4.81(0)
D4010
1SS110
Q4012
BA1A4P
4.81(0)
VCO1
C4046
0.0022
16V X
R4092
100
L4016
150μ
C4072
0.01
16V Y
C4129
100 25V
R4050
1K
R4049
150K
C4073
0.01 16V Y
Q4018
2SK192AGR
Q4019
2SC535B
C4071
0.01 16V Y
R4047
330
R4048
470
C4074
180p B
R4052
100
C4094
0.01
16V Y
L4019
150μ
R4069
1K
R4068
100K
C4092
47p SL
Q4024
2SC458C
C4093
10p SL
R4067
22
UL
TP4004
TP-K
Q4021
2SC458C
R4056
10K
R4057
10K
C4084
1 50V
R4058
100K
C4075
0.01
16V Y
C4076
100 25V
L4017
150μ
L4018
150μ
C4083
0.01
16V Y
Q4020
CX-7925B
C4128
0.01 16V Y
TCXO
4.0VP-P
C4077
0.01
16V Y
3.0VP-P
X4001
10.48576MHZ
C4078
47p UJ
C4079
22p UJ
TC4001
10p
R4053 220
R4054 220
R4055 220
CK1
LE1
DATA1
C4080
100p B
C4081
100p B
C4082 100p B
R4066
100
T4011
L0021295
C4091
6.8p SL
T4012
L0021295
R4064
27K
Q4023
2SC458C
C4088
4.7p SL
R4063
10K
R4065
470
C4089
0.01 16V Y
C4090
0.01 16V Y
Q4022
2SK241GR
R4059
100
C4086
4.7p CH
C4085
0.01 16V Y
C4087
100p B
R4062
330
R4060
100K
R4061
330
J4003
P0090741
GND
VCO1
VCO2
VCO3
VCO4
VCO5
UL
DATA
LE
CK
+5
PLL
3rd LO
DATA2
CK2
LE2
DDS1
LE3
CK3
DATA3
DDS2
+12

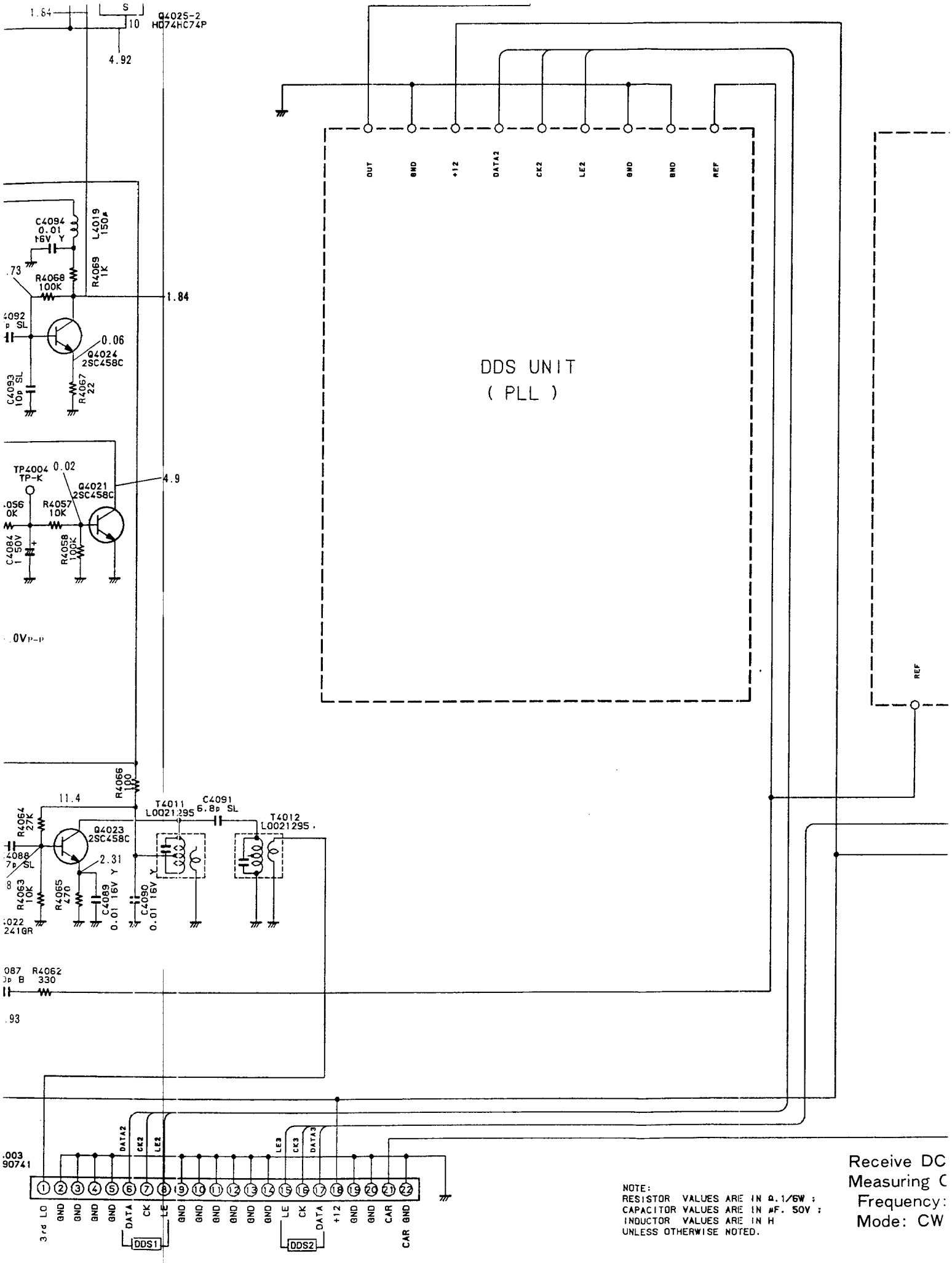

NOTE:
RESISTOR VALUES ARE IN Ω. 1/6W ;
CAPACITOR VALUES ARE IN μF. 50V ;
INDUCTOR VALUES ARE IN H
UNLESS OTHERWISE NOTED.

Receive DC
Measuring C
Frequency:
Mode: CW

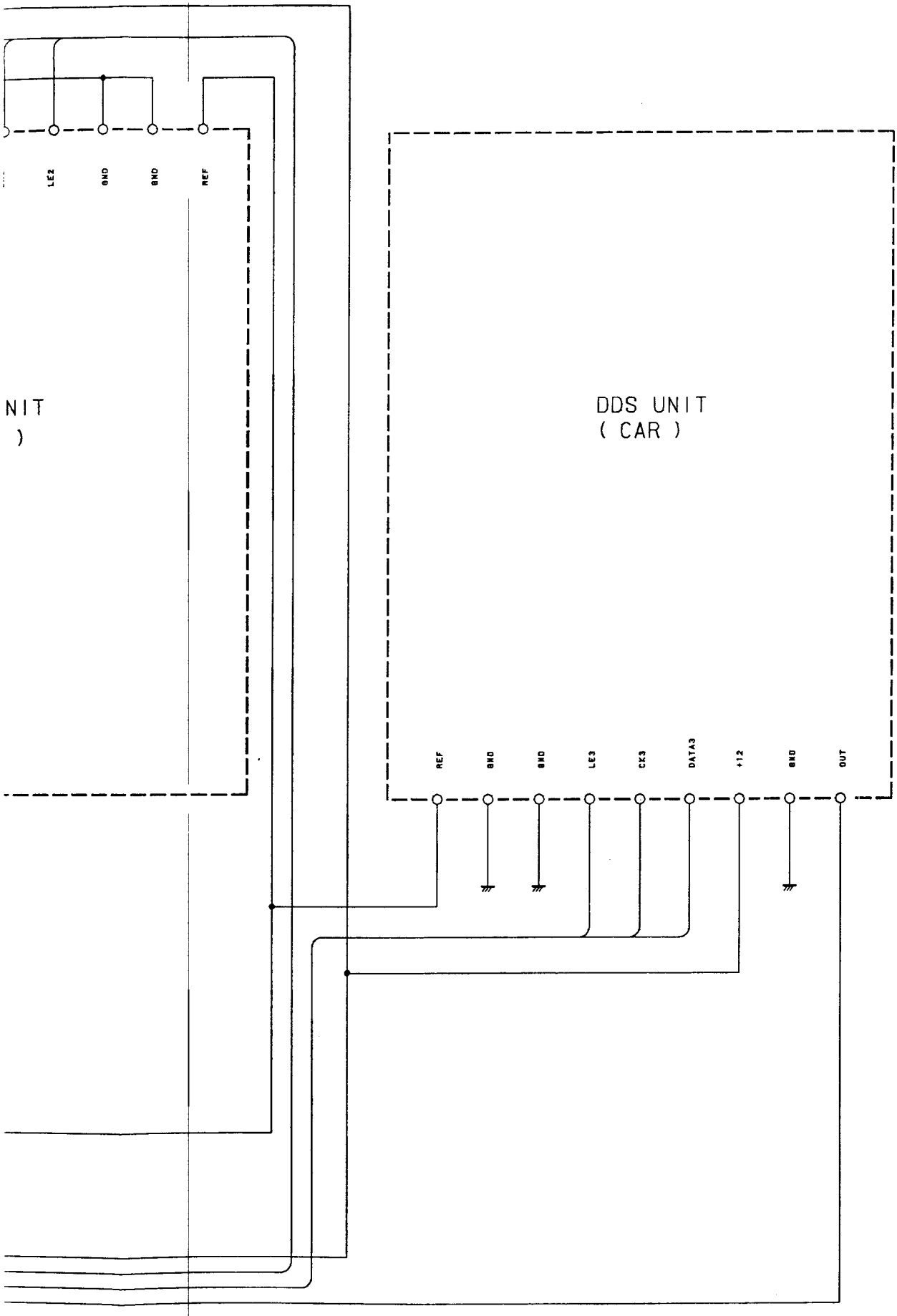

Receive DC Voltage
Measuring Conditions
Frequency: 14.200MHz
Mode: CW

NOTE:
RESISTOR VALUES ARE IN Ω. 1/6W ;
CAPACITOR VALUES ARE IN μF. 50V ;
INDUCTOR VALUES ARE IN H
UNLESS OTHERWISE NOTED.

LOCAL UNIT

L4001
J4001
T4001
T4002
T4003
T4004
T4010
T4009
C4067
C4025
C4028
C4027
C4033
C4034
C4041
C4042
C4043
J4002

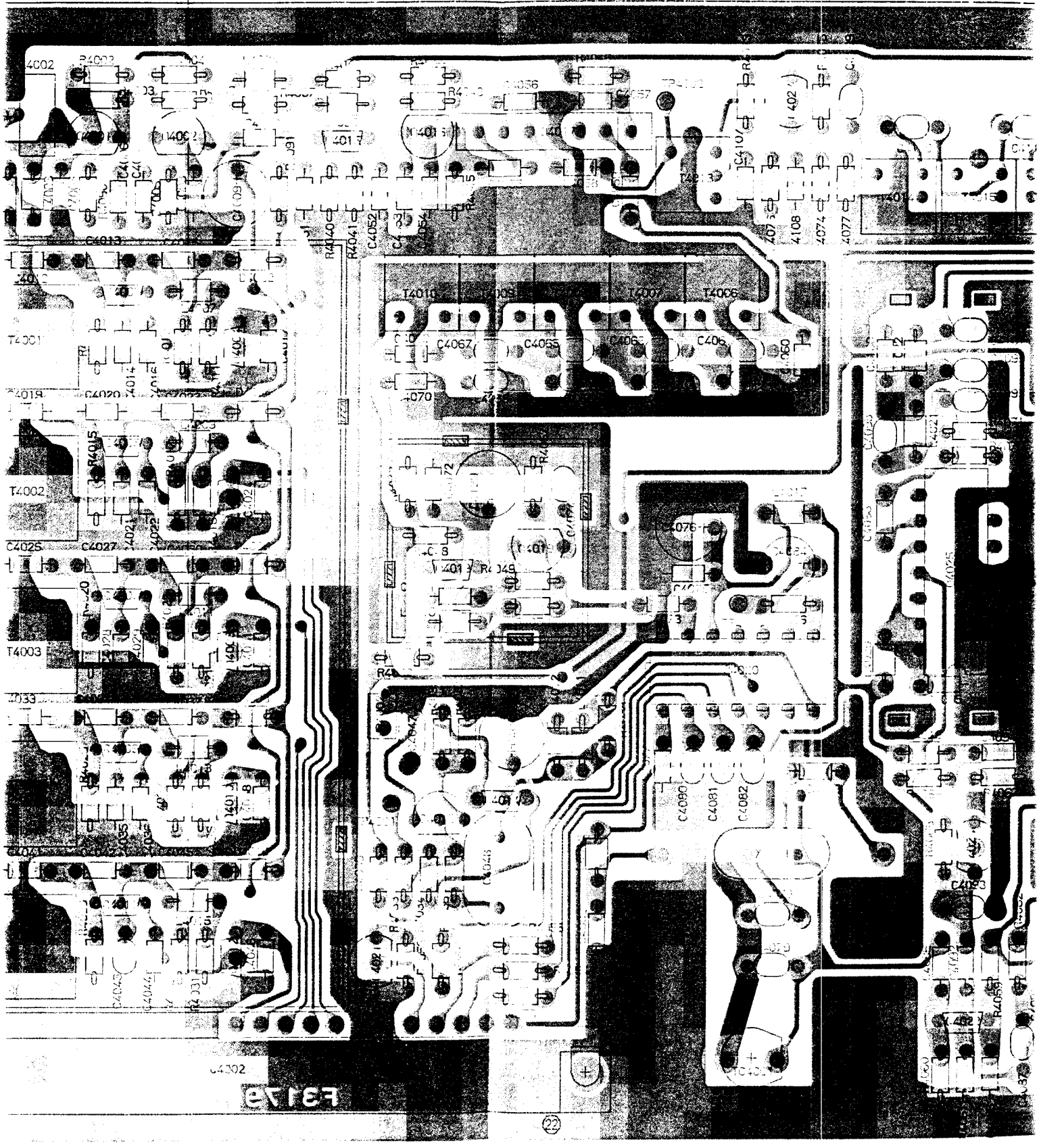
T4001
T4002
T4003
T4006
T4007
T4010
C4067
C4055
C4076
C4090
C4091
C4092
C4093
C4302
R4041
R4049
R4055
R4056
R4405
C4025
C4027
C4052
C4053
C4054
C4036
C4108
C4074
C4077
C4070
C4048
C4046
C4044
C4042
C4040
C4038
C4033
C4031
C4029
C4022
C4021
C4019
C4013
C4002
R4403
R4402
R4401
R4400
R4404
R4406
R4407
R4408
R4409
R4410
R4411
R4412
R4413
R4414
R4415
R4416
R4417
R4418
R4419
R4420
R4421
R4422
R4423
R4424
R4425
R4426
R4427
R4428
R4429
R4430
R4431
R4432
R4433
R4434
R4435
R4436
R4437
R4438
R4439
R4440
R4441
R4442
R4443
R4444
R4445

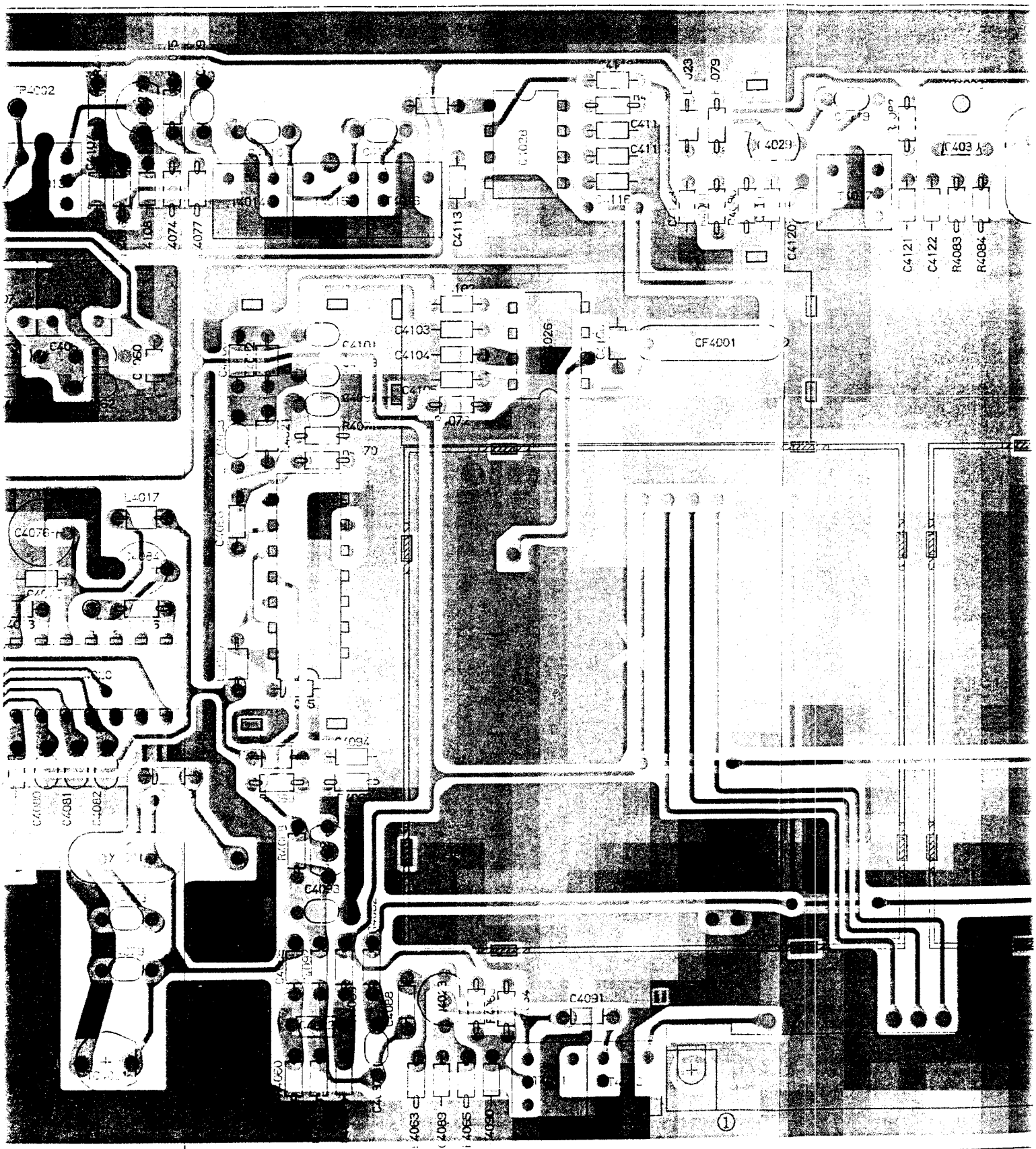

C4113
C4120
C4121
C4122
R4083
R4084
C4103
C4104
CF4001
L4017
C4076
C4091

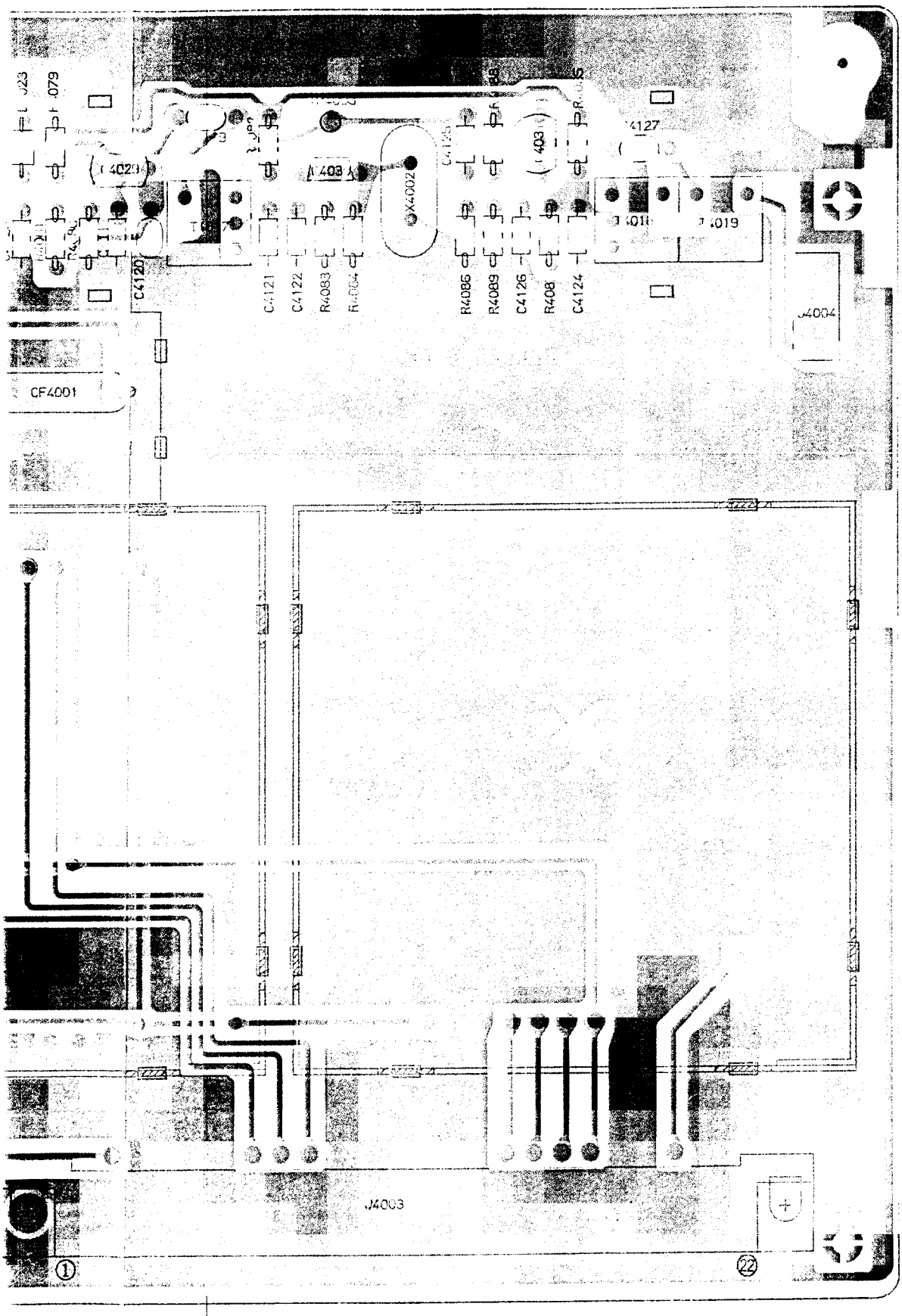

("component" side)

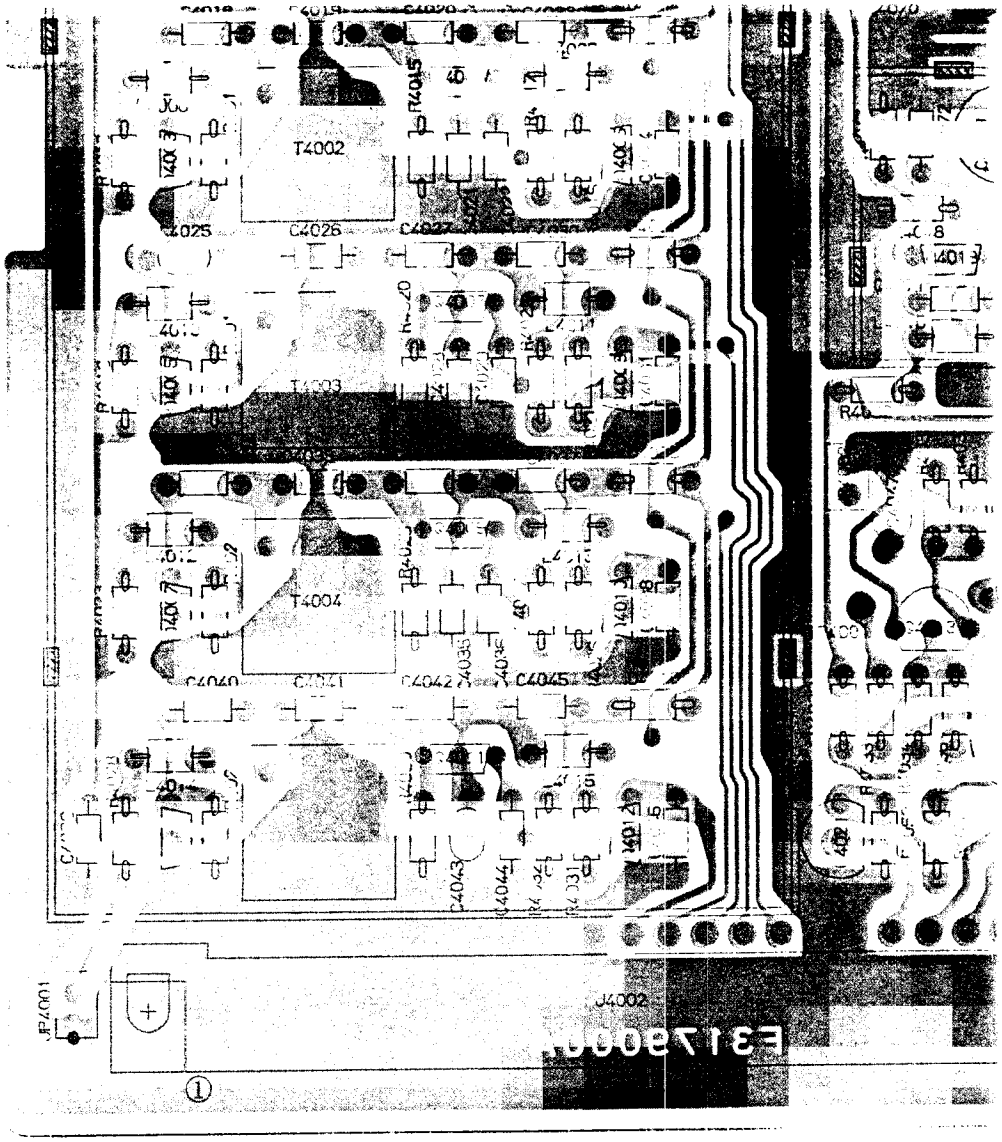

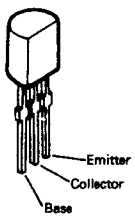

2SC458CTZ
(Q4021, 4023, 4024)
2SC535BTZ
(Q4001, 4002, 4016, 4019, 4027, 4029, 4031)
2SC732TMBL
(Q4013)

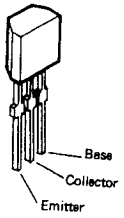

BA1A4P
(Q4004, 4006, 4008, 4010, 4012)

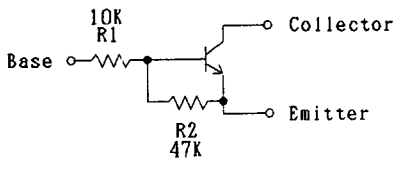

BA1A4P CIRCUIT DIAGRAM

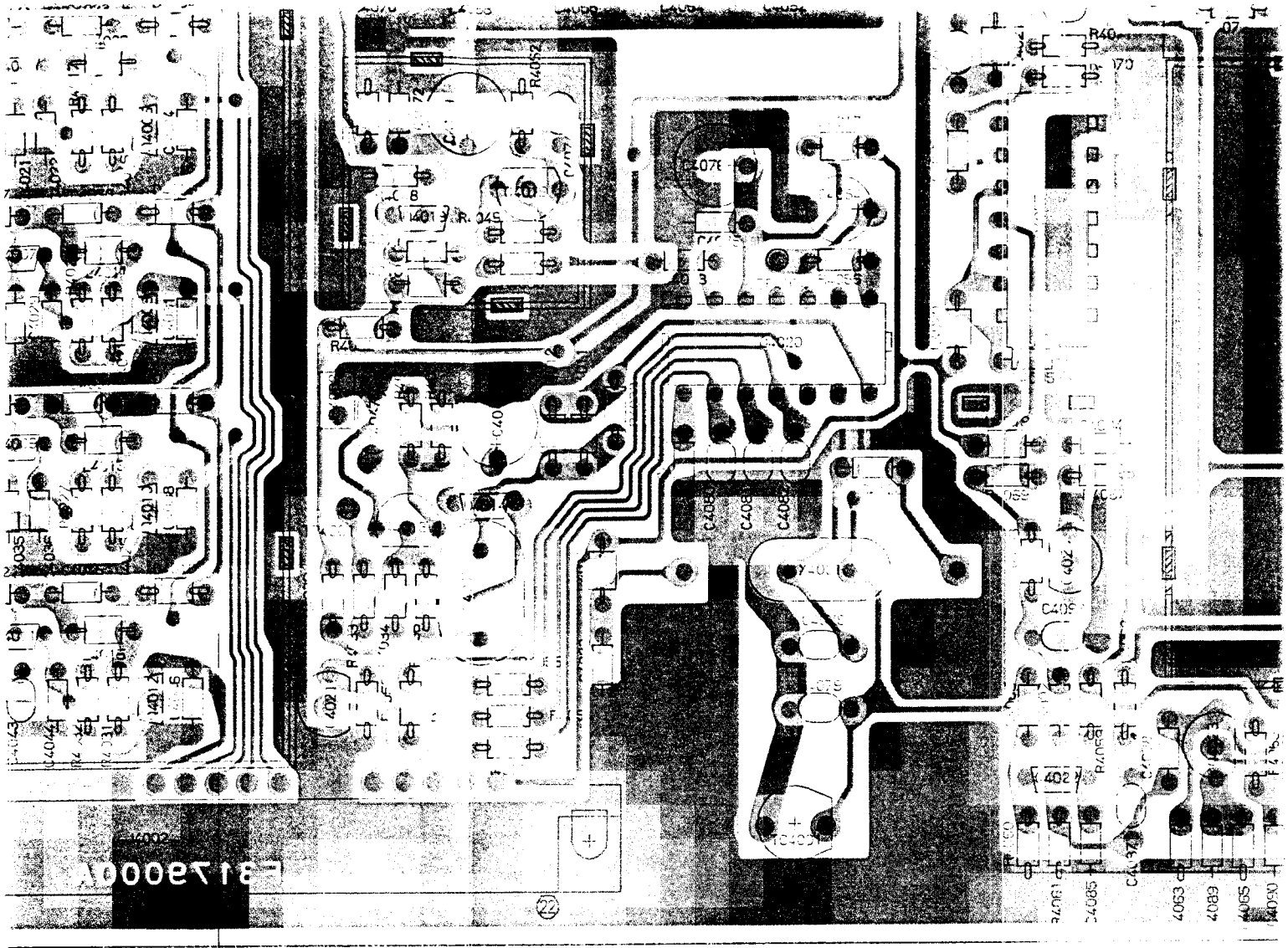

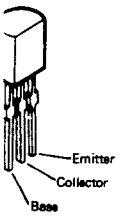

CTZ
4023, 4024)
3TZ
4002, 4016,
)27, 4029,

TMBL

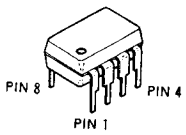

SN16913P
(Q4026, 4028)

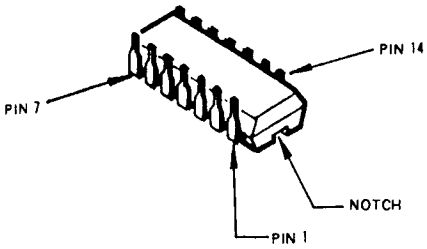

CX-7925B
(Q4020)
HD74HC74P
(Q4025)

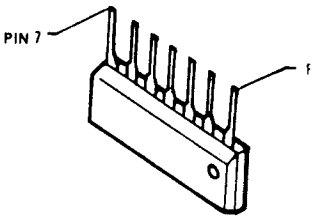

μPC1037H
(Q4017)

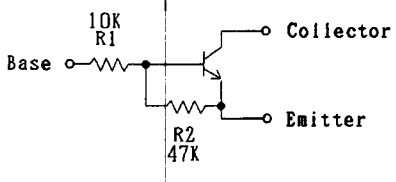

BA1A4P CIRCUIT DIAGRAM

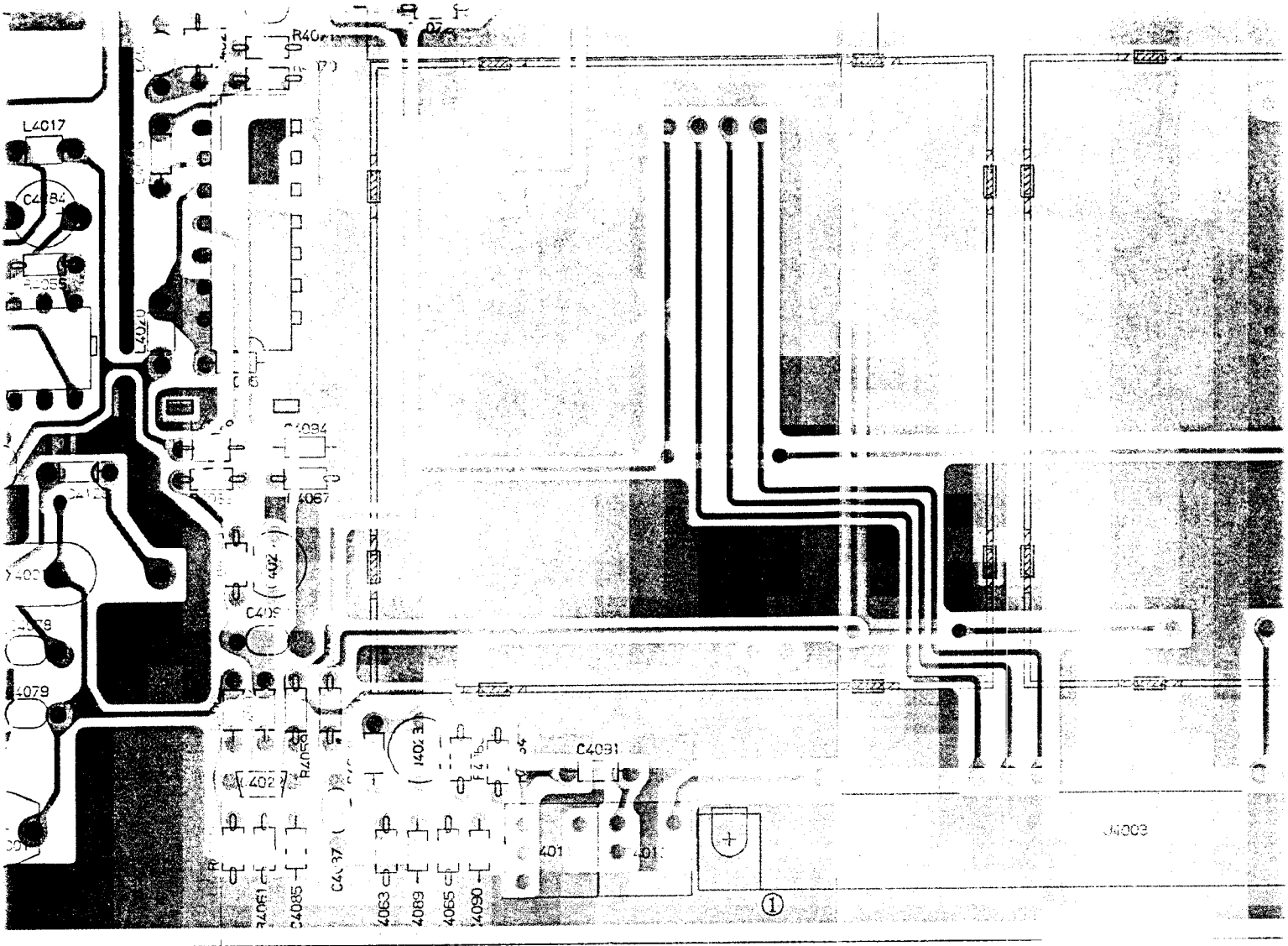

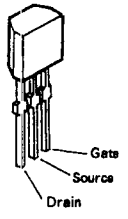

2SK192
(Q4003, 4005, 4007, 4009, 4011, 4015
2SK241GR
(Q4022)

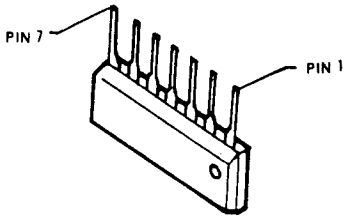

μPC1037H
(Q4017)

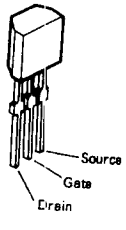

2SK184Y
(Q4014)

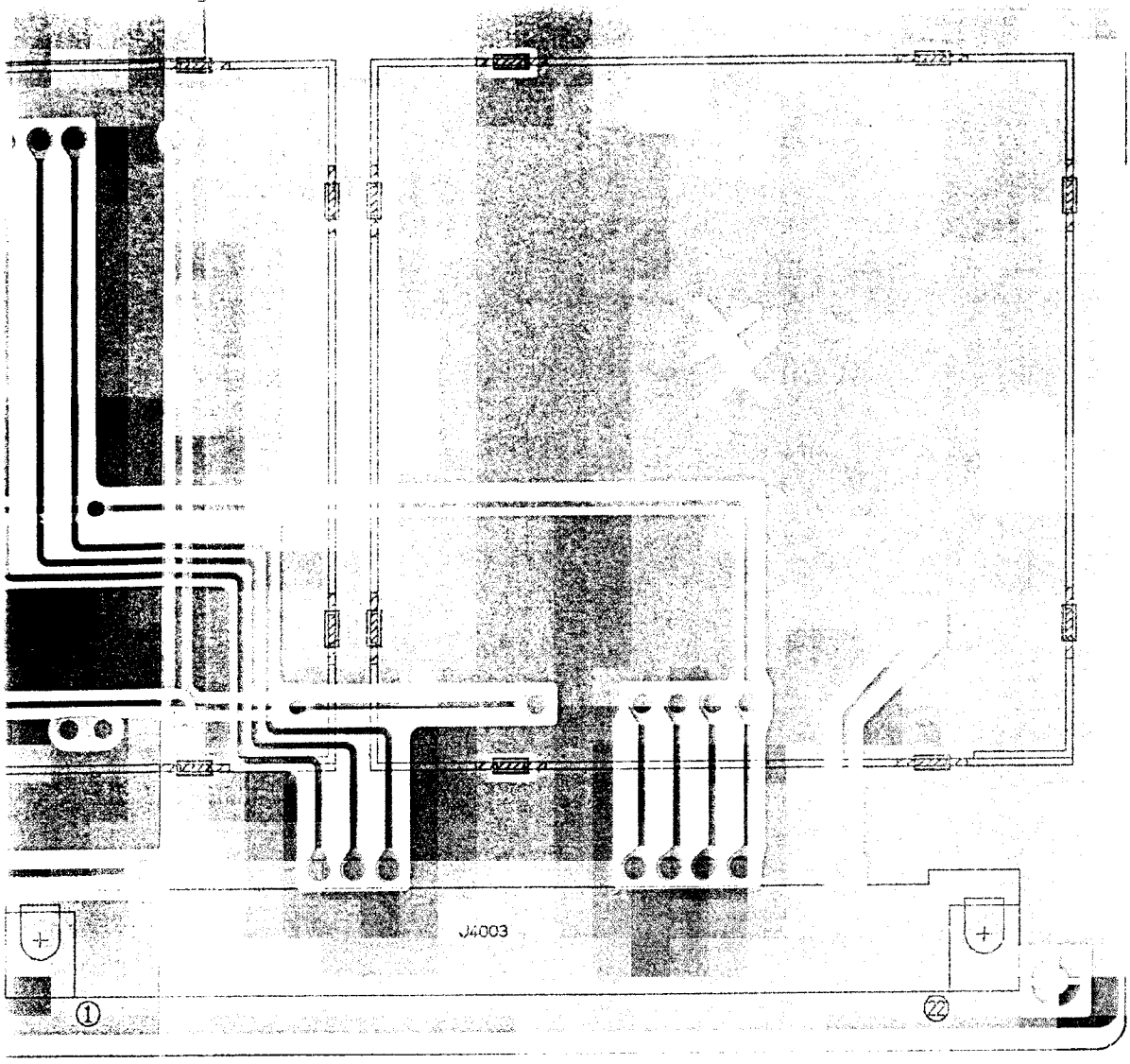

("component" side)

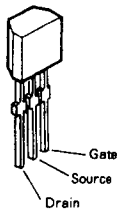

2SK192
(Q4003, 4005, 4007, 4009, 4011, 4015, 4018, 4030)
2SK241GR
(Q4022)

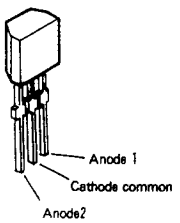

1SV103
(D4001, 4003, 4005, 4007, 4009)

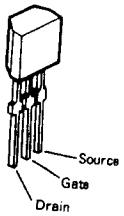

2SK184Y
(Q4014)

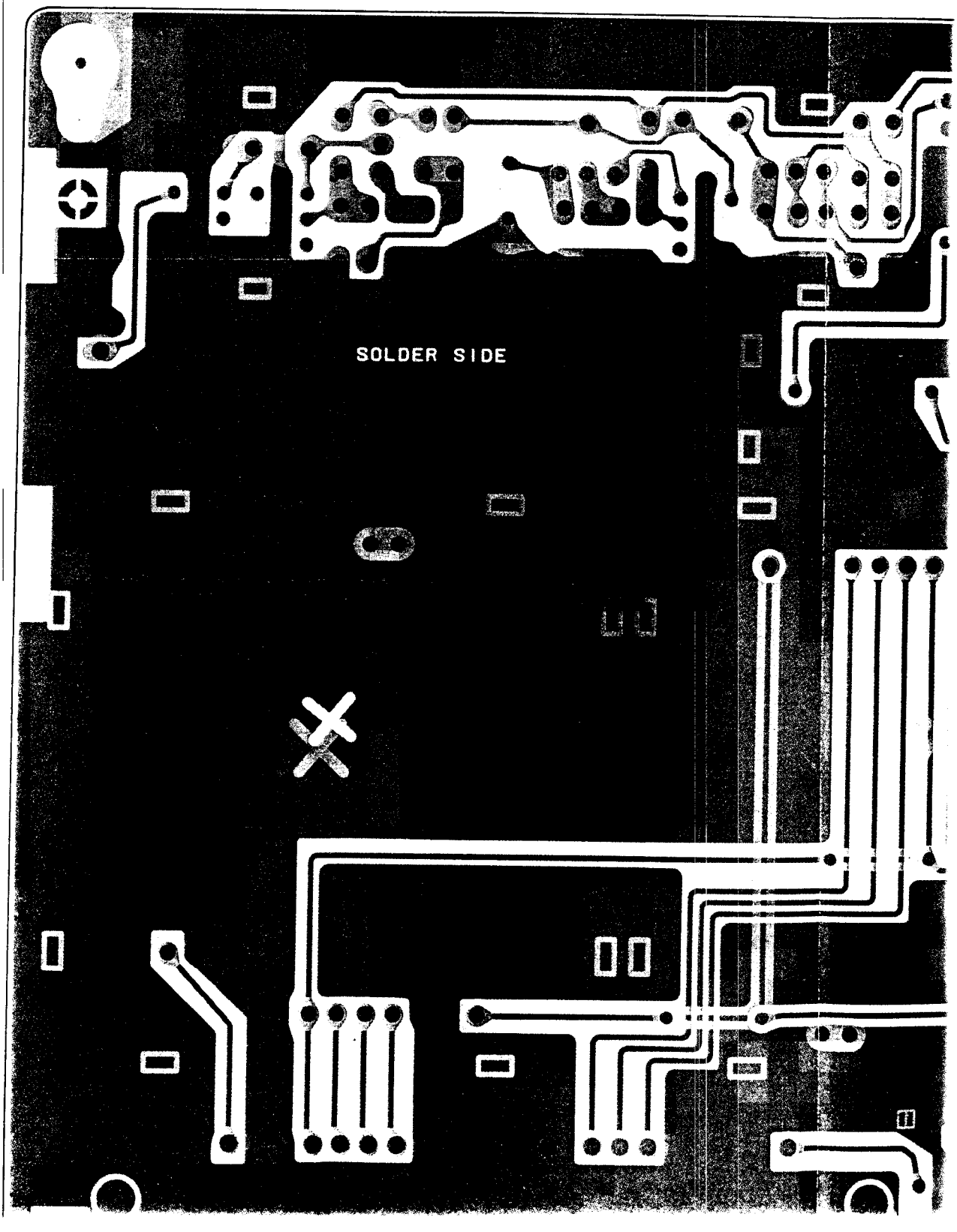
SOLDER SIDE

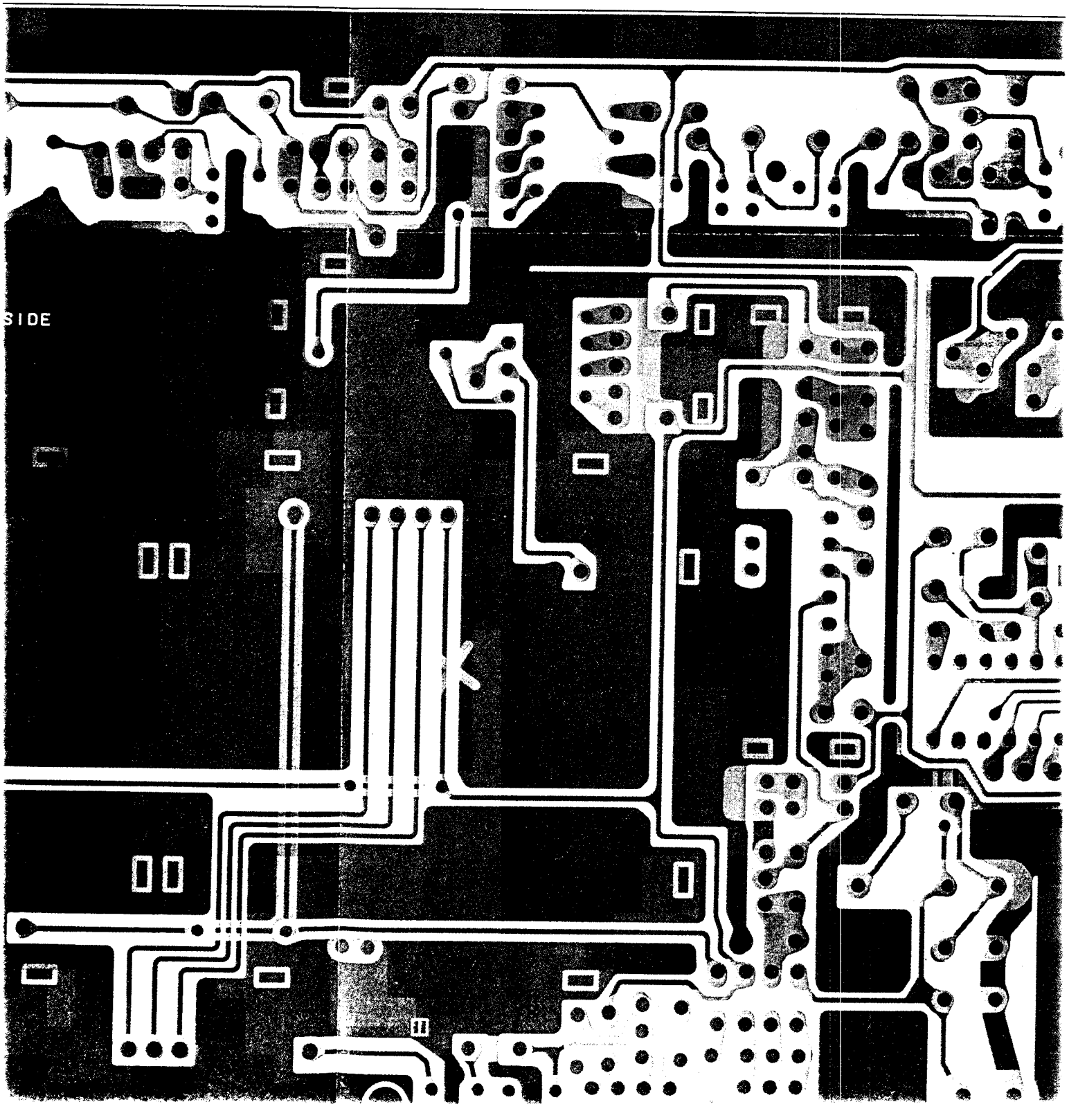
SIDE

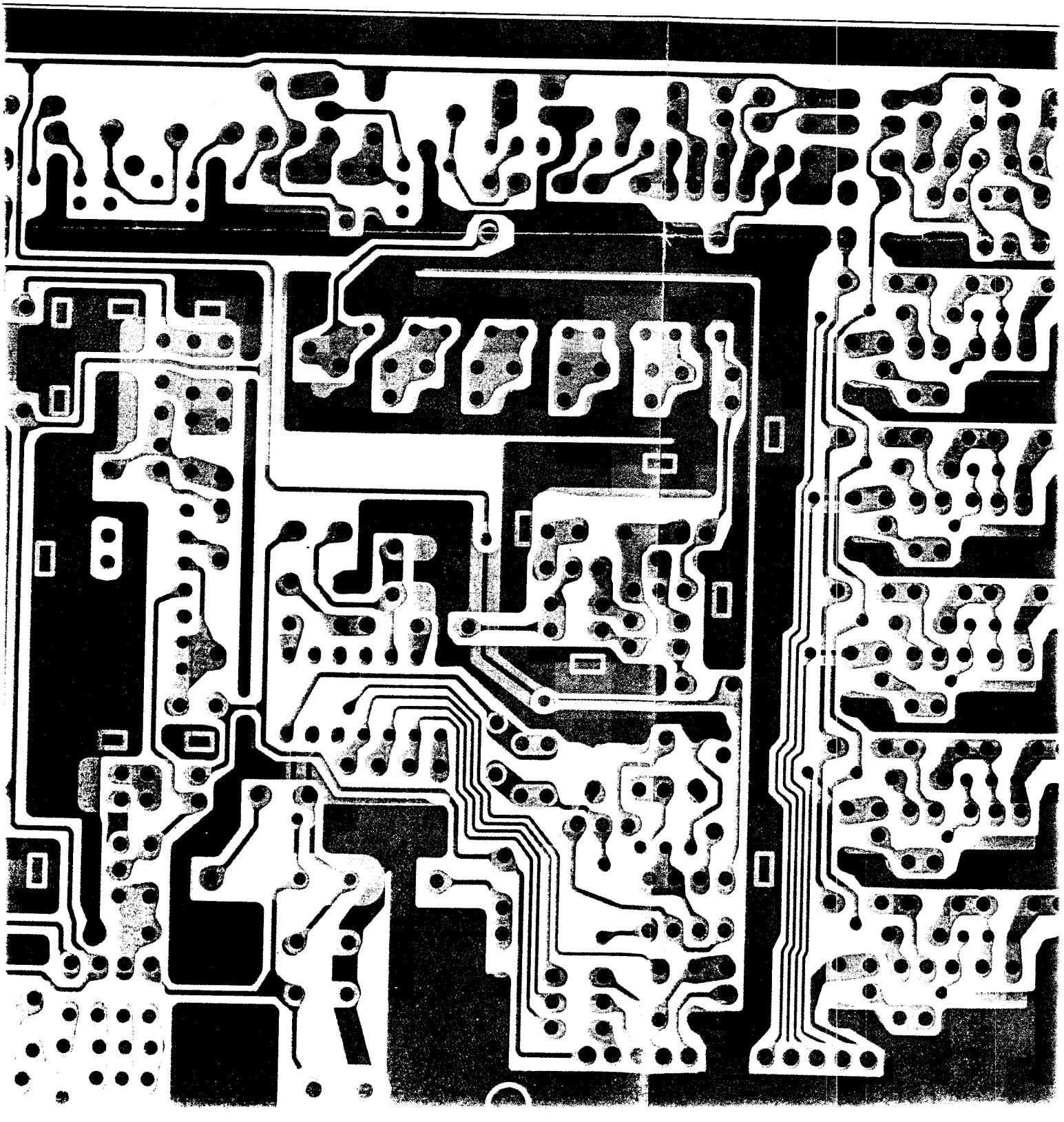

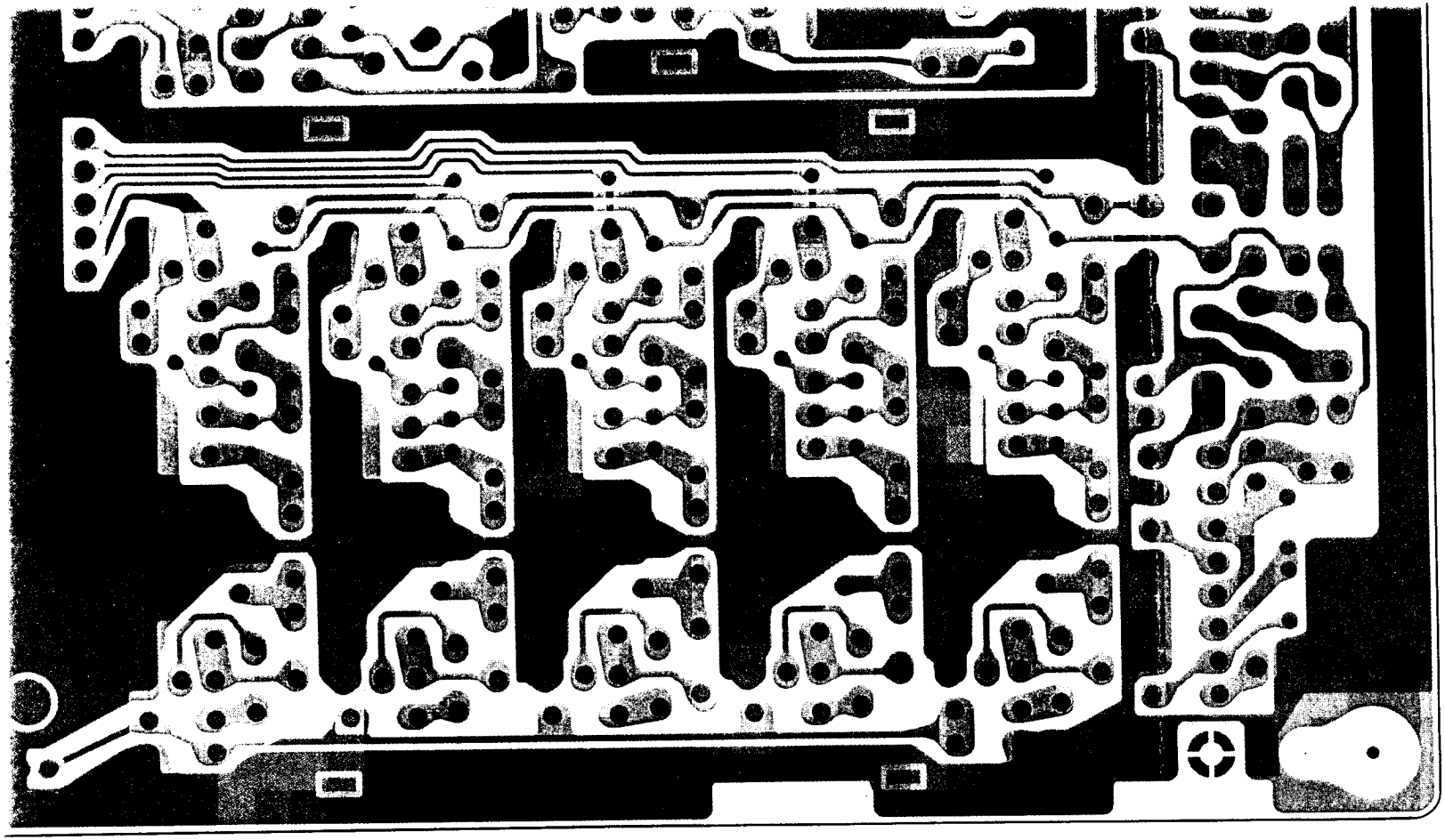

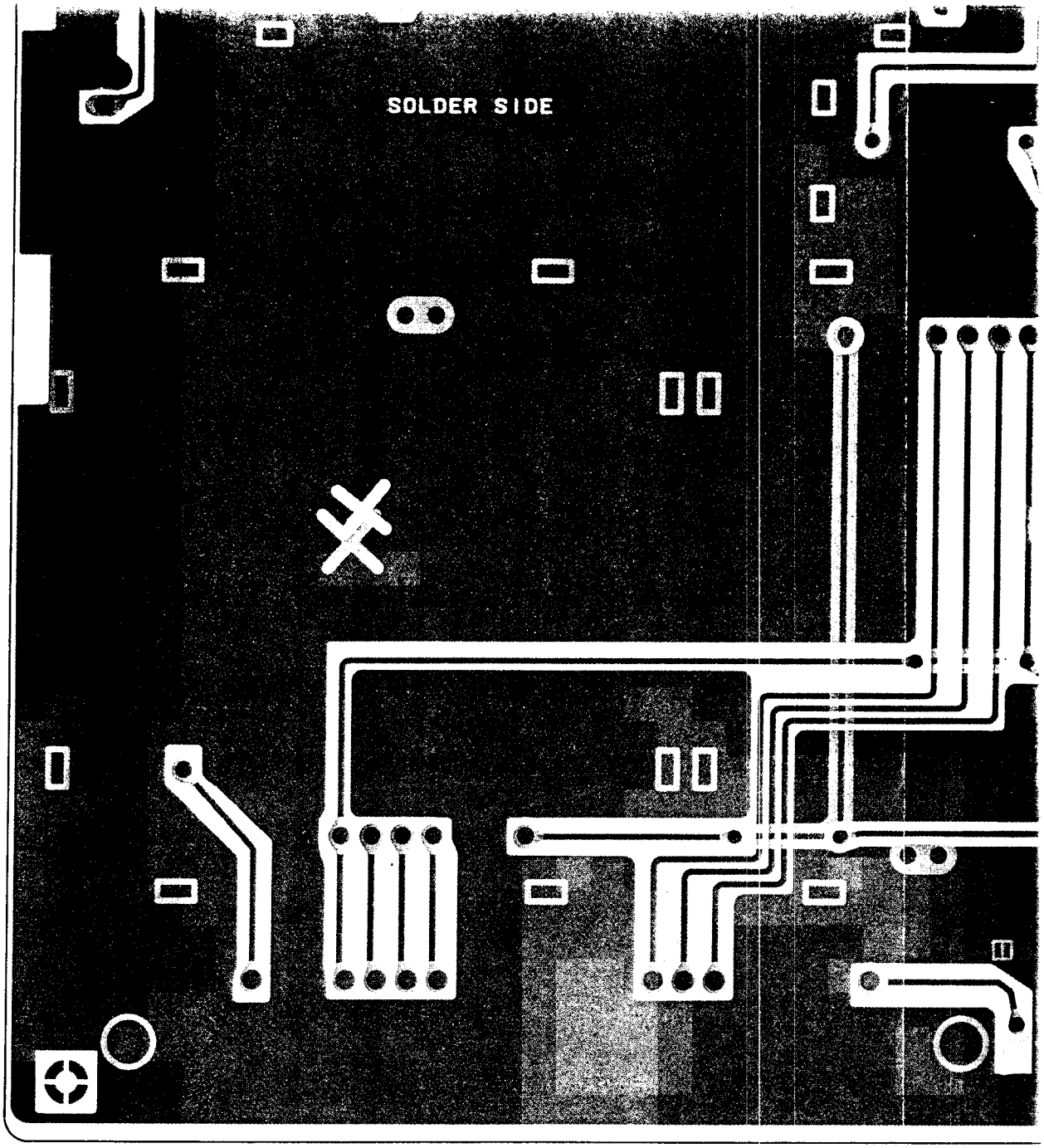
SOLDER SIDE

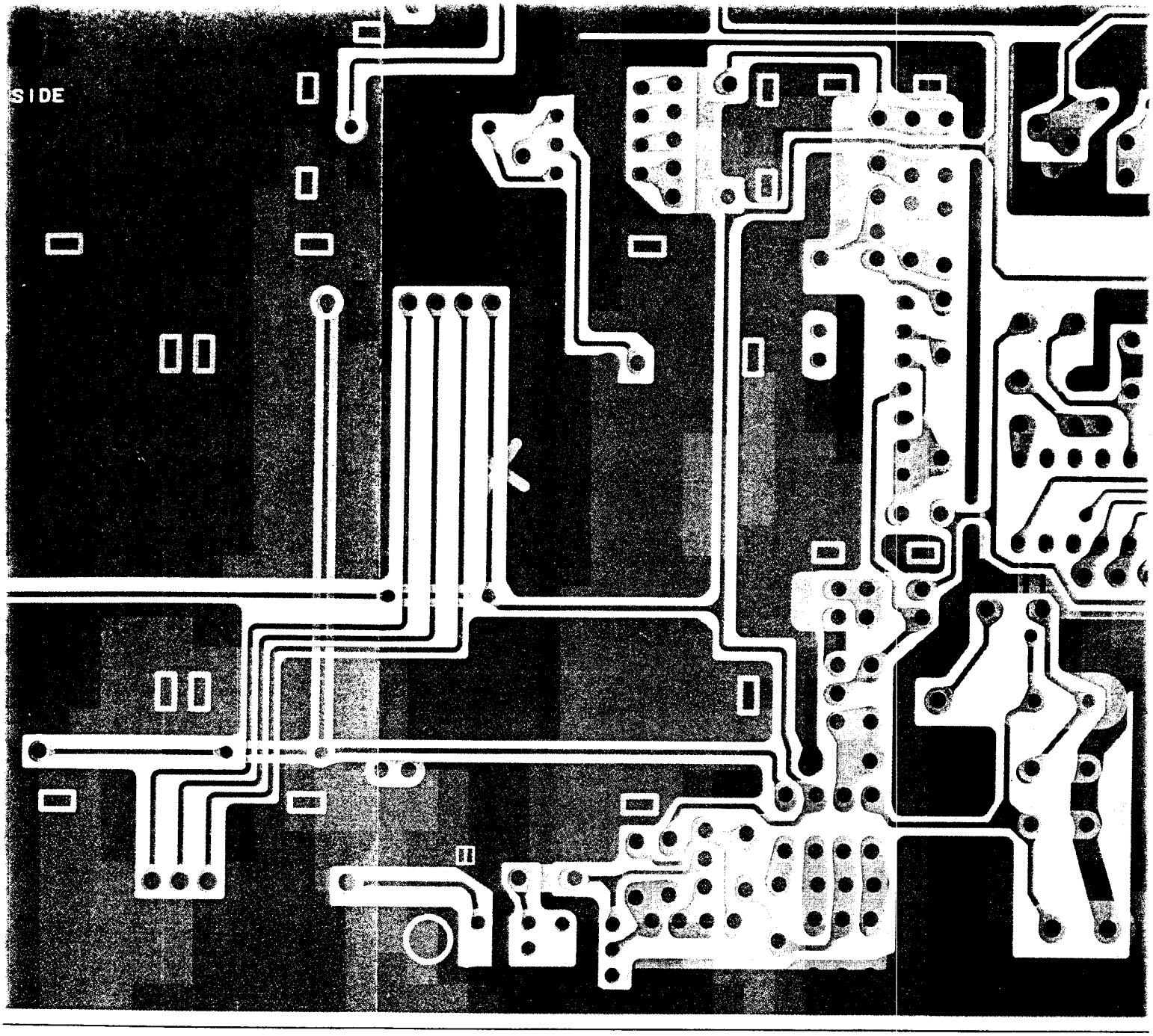
SIDE

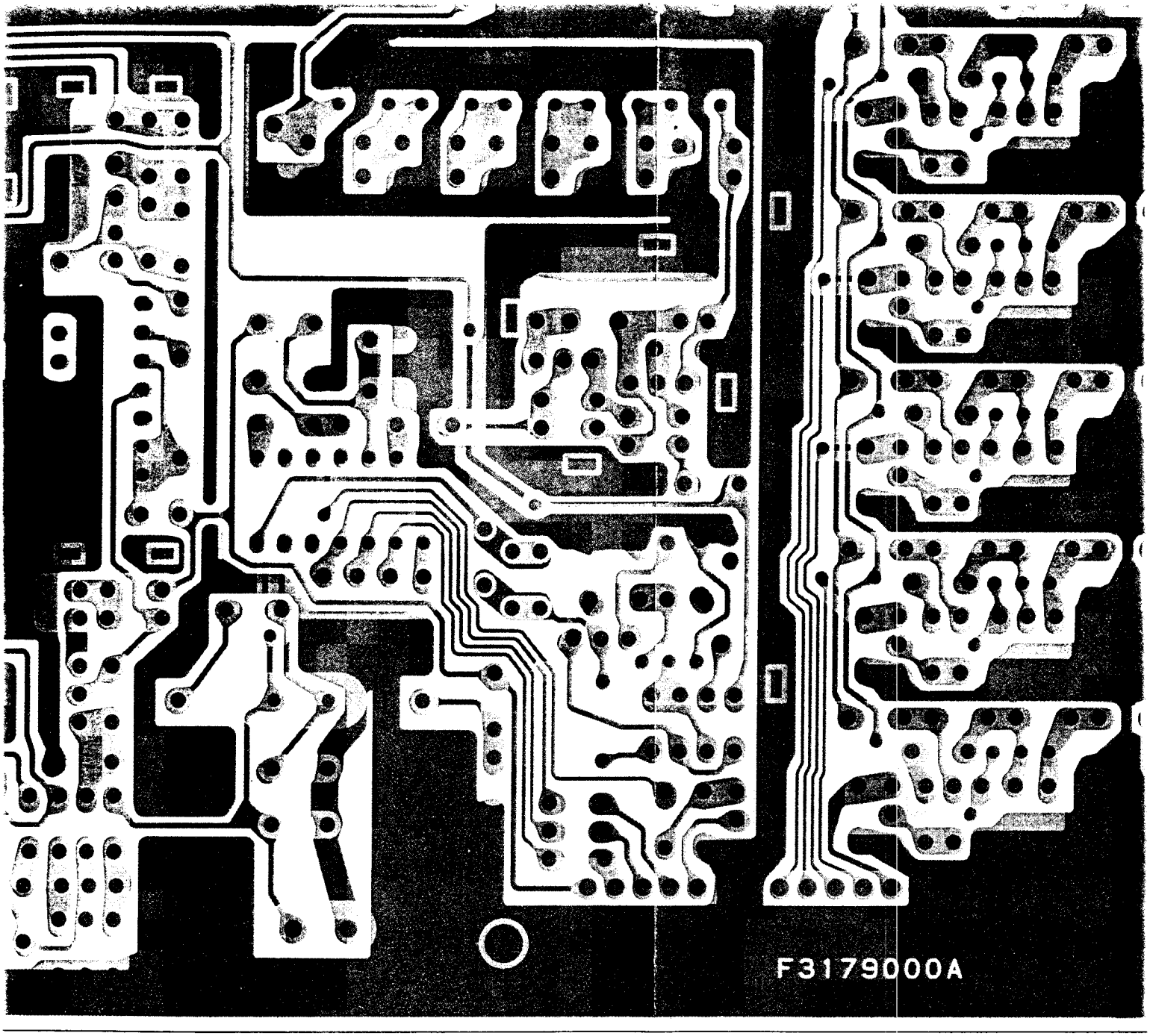
F3179000A

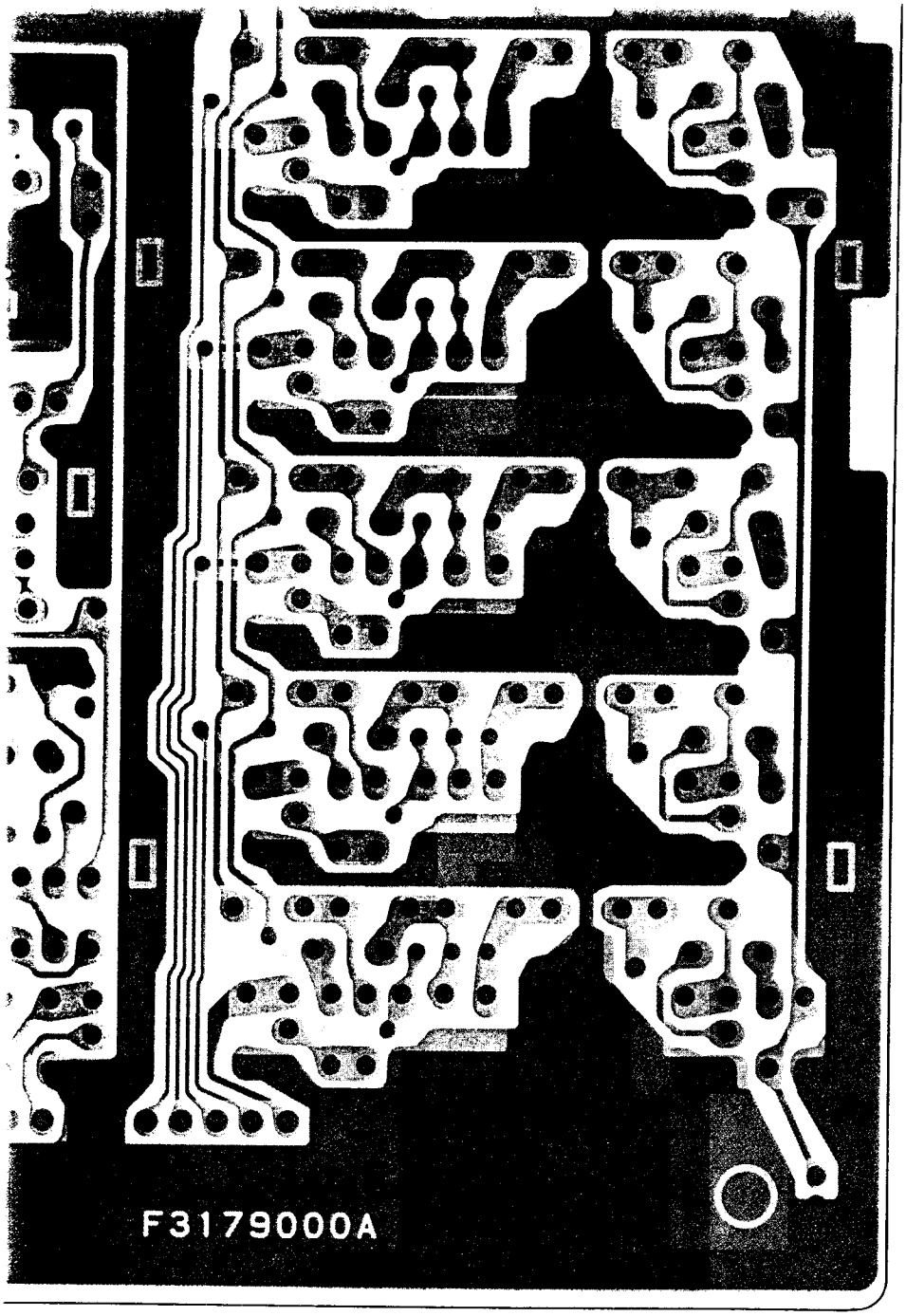

("solder" side)

REF.	YAESU P/N	DESCRIPTION	MFGR'S DESIG	VALUE	WV	TOL.	VERS.
		*** LOCAL UNIT ***					
	CA0225001	P.C.B. W COMP.					W/O TCXO-2
	CA0225002	P.C.B. W COMP.					W TCXO-2
	CP3128001	P.C.B. W COMP. (W PLL-DDS, CAR-DDS UNIT)					W/O TCXO-2
	CP3128002	P.C.B. W COMP. (W PLL-DDS, CAR-DDS UNIT)					W TCXO-2
	F3179000A	P.C.B. W/O COMP.					
C 4001	K28129003	CERAMIC CAP.	EP050X222M-A-B	0.0022uF	16V	X	
C 4002	K28179028	CERAMIC CAP.	UP050SL270J-A-B	27pF	50V	SL	
C 4003	K28179032	CERAMIC CAP.	UP050SL560J-A-B	56pF	50V	SL	
C 4004	K28179028	CERAMIC CAP.	UP050SL270J-A-B	27pF	50V	SL	
C 4005	K28129003	CERAMIC CAP.	EP050X222M-A-B	0.0022uF	16V	X	
C 4006	K28179021	CERAMIC CAP.	UP050SL3R3K-A-B	3.3p	50V	SL	
C 4007	K28179031	CERAMIC CAP.	UP050SL470J-A-B	47pF	50V	SL	
C 4008	K28129003	CERAMIC CAP.	EP050X222M-A-B	0.0022uF	16V	X	
C 4009	K46140005	AL.ELECTRO.CAP.	25V101M6X11TR5	100uF	25V		
C 4010	K28129003	CERAMIC CAP.	EP050X222M-A-B	0.0022uF	16V	X	
C 4011	K28179017	CERAMIC CAP.	UP050UJ300J-A-B	30p	50V	UJ	
C 4012	K28179091	CERAMIC CAP.	UP050RH150J-A-B	15pF	50V	RH	
C 4013	K28179090	CERAMIC CAP.	UP050RH120J-A-B	12pF	50V	RH	
C 4014	K28179007	CERAMIC CAP.	UP050CH150J-A-B	15pF	50V	CH	
C 4015	K28179005	CERAMIC CAP.	UP050CH2R2K-A-B	2.2p	50V	CH	
C 4016	K28129003	CERAMIC CAP.	EP050X222M-A-B	0.0022uF	16V	X	
C 4017	K28129003	CERAMIC CAP.	EP050X222M-A-B	0.0022uF	16V	X	
C 4018	K28179016	CERAMIC CAP.	UP050UJ270J-A-B	27pF	50V	UJ	
C 4019	K28179091	CERAMIC CAP.	UP050RH150J-A-B	15pF	50V	RH	
C 4020	K28179090	CERAMIC CAP.	UP050RH120J-A-B	12pF	50V	RH	
C 4021	K28179091	CERAMIC CAP.	UP050RH150J-A-B	15pF	50V	RH	
C 4022	K28129003	CERAMIC CAP.	EP050X222M-A-B	0.0022uF	16V	X	
C 4023	K28179005	CERAMIC CAP.	UP050CH2R2K-A-B	2.2p	50V	CH	
C 4024	K28129003	CERAMIC CAP.	EP050X222M-A-B	0.0022uF	16V	X	
C 4025	K26171204	CERAMIC CAP.	DD104-979UJ330J50	33pF	50V	UJ	
C 4026	K28179012	CERAMIC CAP.	UP050UJ150J-A-B	15pF	50V	UJ	
C 4027	K28179006	CERAMIC CAP.	UP050CH120J-A-B	12pF	50V	CH	
C 4028	K28179008	CERAMIC CAP.	UP050CH180J-A-B	18pF	50V	CH	
C 4029	K28129003	CERAMIC CAP.	EP050X222M-A-B	0.0022uF	16V	X	
C 4030	K28179005	CERAMIC CAP.	UP050CH2R2K-A-B	2.2p	50V	CH	
C 4031	K28129003	CERAMIC CAP.	EP050X222M-A-B	0.0022uF	16V	X	
C 4032	K28179012	CERAMIC CAP.	UP050UJ150J-A-B	15pF	50V	UJ	
C 4033	K28179008	CERAMIC CAP.	UP050CH180J-A-B	18pF	50V	CH	
C 4034	K28179007	CERAMIC CAP.	UP050CH150J-A-B	15pF	50V	CH	
C 4035	K28179014	CERAMIC CAP.	UP050UJ200J-A-B	20p	50V	UJ	
C 4036	K28129003	CERAMIC CAP.	EP050X222M-A-B	0.0022uF	16V	X	
C 4037	K28179005	CERAMIC CAP.	UP050CH2R2K-A-B	2.2p	50V	CH	
C 4038	K28129003	CERAMIC CAP.	EP050X222M-A-B	0.0022uF	16V	X	
C 4039	K28129003	CERAMIC CAP.	EP050X222M-A-B	0.0022uF	16V	X	
C 4040	K28179014	CERAMIC CAP.	UP050UJ200J-A-B	20p	50V	UJ	
C 4041	K28179092	CERAMIC CAP.	UP050RH180J-A-B	18pF	50V	RH	
C 4042	K28179091	CERAMIC CAP.	UP050RH150J-A-B	15pF	50V	RH	
C 4043	K26170188	CERAMIC CAP.	DD104-979CH240J50	24p	50V	CH	
C 4044	K28129003	CERAMIC CAP.	EP050X222M-A-B	0.0022uF	16V	X	
C 4045	K28179005	CERAMIC CAP.	UP050CH2R2K-A-B	2.2p	50V	CH	
C 4046	K28129003	CERAMIC CAP.	EP050X222M-A-B	0.0022uF	16V	X	
C 4047	K56170057	CAP.	50F2Z103MTP	0.01	50V		
C 4048	K50177154	FILM CAP.	50F2U154M	0.15	50V		

REF.	YAESU P/N	DESCRIPTION	MFGR'S DESIG	VALUE	WV	TOL.	VERS.
C 4049	K46140005	AL. ELECTRO. CAP.	25V101M6X11TR5	100uF	25V		
C 4050	K28179024	CERAMIC CAP.	UP050SL8R2K-A-B	8.2p	50V	SL	
C 4051	K28179021	CERAMIC CAP.	UP050SL3R3K-A-B	3.3p	50V	SL	
C 4052	K28129003	CERAMIC CAP.	EP050X222M-A-B	0.0022uF	16V	X	
C 4053	K28129003	CERAMIC CAP.	EP050X222M-A-B	0.0022uF	16V	X	
C 4054	K28129003	CERAMIC CAP.	EP050X222M-A-B	0.0022uF	16V	X	
C 4055	K28129003	CERAMIC CAP.	EP050X222M-A-B	0.0022uF	16V	X	
C 4056	K28129001	CERAMIC CAP.	EP050Y103N-A	0.01uF	16V	Y	
C 4057	K28129001	CERAMIC CAP.	EP050Y103N-A	0.01uF	16V	Y	
C 4058	K28129003	CERAMIC CAP.	EP050X222M-A-B	0.0022uF	16V	X	
C 4059	K28129001	CERAMIC CAP.	EP050Y103N-A	0.01uF	16V	Y	
C 4060	K28179024	CERAMIC CAP.	UP050SL8R2K-A-B	8.2p	50V	SL	
C 4061	K26170096	CERAMIC CAP.	DD104-979SL1R5C50	1.5p	50V	SL	
C 4062	K26171012	CERAMIC CAP.	DD104-979SL200J50	20p	50V	SL	
C 4063	K26171006	CERAMIC CAP.	DD104-979SL110J50	11p	50V	SL	
C 4064	K26171008	CERAMIC CAP.	DD104-979SL130J50	13p	50V	SL	
C 4065	K26171012	CERAMIC CAP.	DD104-979SL200J50	20p	50V	SL	
C 4066	K26171006	CERAMIC CAP.	DD104-979SL110J50	11p	50V	SL	
C 4067	K26171010	CERAMIC CAP.	DD104-979SL160J50	16p	50V	SL	
C 4068	K26171010	CERAMIC CAP.	DD104-979SL160J50	16p	50V	SL	
C 4069	K28179037	CERAMIC CAP.	UP050SL5R6K-A-B	5.6p	50V	SL	
C 4070	K28179024	CERAMIC CAP.	UP050SL8R2K-A-B	8.2p	50V	SL	
C 4071	K28129001	CERAMIC CAP.	EP050Y103N-A	0.01uF	16V	Y	
C 4072	K28129001	CERAMIC CAP.	EP050Y103N-A	0.01uF	16V	Y	
C 4073	K28129001	CERAMIC CAP.	EP050Y103N-A	0.01uF	16V	Y	
C 4074	K26171605	CERAMIC CAP.	DD104-979B181K50	180pF	50V	B	
C 4075	K28129001	CERAMIC CAP.	EP050Y103N-A	0.01uF	16V	Y	
C 4076	K46140005	AL. ELECTRO. CAP.	25V101M6X11TR5	100uF	25V		
C 4077	K28129001	CERAMIC CAP.	EP050Y103N-A	0.01uF	16V	Y	
C 4078	K26171208	CERAMIC CAP.	DD104-979UJ470J50	47pF	50V	UJ	W/O TCXO-2
C 4079	K26170300	CERAMIC CAP.	DD104-979UJ220J50	22pF	50V	UJ	W/O TCXO-2
C 4080	K26171602	CERAMIC CAP.	DD104-979B101K50	100pF	50V	B	
C 4081	K26171602	CERAMIC CAP.	DD104-979B101K50	100pF	50V	B	
C 4082	K26171602	CERAMIC CAP.	DD104-979B101K50	100pF	50V	B	
C 4083	K28129001	CERAMIC CAP.	EP050Y103N-A	0.01uF	16V	Y	
C 4084	K46170017	AL. ELECTRO. CAP.	50V010M5X11TR5	1uF	50V		
C 4085	K28129001	CERAMIC CAP.	EP050Y103N-A	0.01uF	16V	Y	
C 4086	K28179051	CERAMIC CAP.	UP050CH4R7K-A-B	4.7p	50V	CH	
C 4087	K26171602	CERAMIC CAP.	DD104-979B101K50	100pF	50V	B	
C 4088	K28179022	CERAMIC CAP.	UP050SL4R7K-A-B	4.7p	50V	SL	
C 4089	K28129001	CERAMIC CAP.	EP050Y103N-A	0.01uF	16V	Y	
C 4090	K28129001	CERAMIC CAP.	EP050Y103N-A	0.01uF	16V	Y	
C 4091	K28179023	CERAMIC CAP.	UP050SL6R8K-A-B	6.8p	50V	SL	
C 4092	K28179031	CERAMIC CAP.	UP050SL470J-A-B	47pF	50V	SL	
C 4093	K26171005	CERAMIC CAP.	DD104-979SL100D50	10pF	50V	SL	
C 4094	K28129001	CERAMIC CAP.	EP050Y103N-A	0.01uF	16V	Y	
C 4095	K28129001	CERAMIC CAP.	EP050Y103N-A	0.01uF	16V	Y	
C 4096	K28129001	CERAMIC CAP.	EP050Y103N-A	0.01uF	16V	Y	
C 4097	K26171025	CERAMIC CAP.	DD104-979SL680J50	68pF	50V	SL	
C 4098	K26171009	CERAMIC CAP.	DD104-979SL150J50	15pF	50V	SL	
C 4099	K26171602	CERAMIC CAP.	DD104-979B101K50	100pF	50V	B	
C 4100	K28179022	CERAMIC CAP.	UP050SL4R7K-A-B	4.7p	50V	SL	
C 4101	K26171025	CERAMIC CAP.	DD104-979SL680J50	68pF	50V	SL	
C 4102	K28129001	CERAMIC CAP.	EP050Y103N-A	0.01uF	16V	Y	
C 4103	K28179002	CERAMIC CAP.	UP050F473Z-A-B	0.047uF	50V	F	

REF.	YAESU P/N	DESCRIPTION	MFGR'S DESIG	VALUE	WV	TOL.	VERS.
C 4104	K28179002	CERAMIC CAP.	UP050F473Z-A-B	0.047uF	50V	F	
C 4105	K28179002	CERAMIC CAP.	UP050F473Z-A-B	0.047uF	50V	F	
C 4106	K28179002	CERAMIC CAP.	UP050F473Z-A-B	0.047uF	50V	F	
C 4107	K28129001	CERAMIC CAP.	EP050Y103N-A	0.01uF	16V	Y	
C 4108	K28129003	CERAMIC CAP.	EP050X222M-A-B	0.0022uF	16V	X	
C 4109	K26170096	CERAMIC CAP.	DD104-979SL1R5C50	1.5p	50V	SL	
C 4110	K26170095	CERAMIC CAP.	DD104-979SL010C50	1pF	50V	SL	
C 4111	K26170095	CERAMIC CAP.	DD104-979SL010C50	1pF	50V	SL	
C 4112	K28129003	CERAMIC CAP.	EP050X222M-A-B	0.0022uF	16V	X	
C 4113	K28129001	CERAMIC CAP.	EP050Y103N-A	0.01uF	16V	Y	
C 4114	K28129001	CERAMIC CAP.	EP050Y103N-A	0.01uF	16V	Y	
C 4115	K28129001	CERAMIC CAP.	EP050Y103N-A	0.01uF	16V	Y	
C 4116	K28129001	CERAMIC CAP.	EP050Y103N-A	0.01uF	16V	Y	
C 4117	K28129003	CERAMIC CAP.	EP050X222M-A-B	0.0022uF	16V	X	
C 4118	K28129003	CERAMIC CAP.	EP050X222M-A-B	0.0022uF	16V	X	
C 4119	K26170095	CERAMIC CAP.	DD104-979SL010C50	1pF	50V	SL	
C 4120	K26171005	CERAMIC CAP.	DD104-979SL100D50	10pF	50V	SL	
C 4121	K28129003	CERAMIC CAP.	EP050X222M-A-B	0.0022uF	16V	X	
C 4122	K28129003	CERAMIC CAP.	EP050X222M-A-B	0.0022uF	16V	X	
C 4123	K28129003	CERAMIC CAP.	EP050X222M-A-B	0.0022uF	16V	X	
C 4124	K28129003	CERAMIC CAP.	EP050X222M-A-B	0.0022uF	16V	X	
C 4125	K28179020	CERAMIC CAP.	UP050SL2R2K-A-B	2.2p	50V	SL	
C 4126	K28129003	CERAMIC CAP.	EP050X222M-A-B	0.0022uF	16V	X	
C 4127	K26170095	CERAMIC CAP.	DD104-979SL010C50	1pF	50V	SL	
C 4128	K28129001	CERAMIC CAP.	EP050Y103N-A	0.01uF	16V	Y	
C 4129	K46140005	AL. ELECTRO. CAP.	25V101M6X11TR5	100uF	25V		
CF4001	H3900403	CERAMIC FILTER	SFT5.57MA				
D 4001	G2050013	DIODE	1SV103(TPE4)				
D 4002	G2060010	DIODE	1SS110TJ				
D 4003	G2050013	DIODE	1SV103(TPE4)				
D 4004	G2060010	DIODE	1SS110TJ				
D 4005	G2050013	DIODE	1SV103(TPE4)				
D 4006	G2060010	DIODE	1SS110TJ				
D 4007	G2050013	DIODE	1SV103(TPE4)				
D 4008	G2060010	DIODE	1SS110TJ				
D 4009	G2050013	DIODE	1SV103(TPE4)				
D 4010	G2060010	DIODE	1SS110TJ				
D 4011	G2060004	DIODE	1SS270TJ				
D 4012	G2060004	DIODE	1SS270TJ				
J 4001	P1090255	CONNECTOR	TMP-J01X-A2				
J 4002	P0090741	CONNECTOR	EC1C-22P-2.5DSA				
J 4003	P0090741	CONNECTOR	EC1C-22P-2.5DSA				
J 4004	P1090255	CONNECTOR	TMP-J01X-A2				
JP4001	T9206044	WIRE-ASSY					
L 4001	L0021409	COIL	0.117U T25-12				
L 4002	L0021409	COIL	0.117U T25-12				
L 4003	L1790050	M. RFC	LAP02TA2R2K	2.2uH			
L 4004	L1790058	M. RFC	LAP02TA100K	10uH			
L 4005	L1790058	M. RFC	LAP02TA100K	10uH			
L 4006	L1790066	M. RFC	LAP02TA470K	47uH			

REF.	YAESU P/N	DESCRIPTION	MFGR'S DESIG	VALUE	WV	TOL.	VERS.
L 4007	L1790051	M.RFC	LAPO2TA2R7K	2.7u			
L 4008	L1790066	M.RFC	LAPO2TA470K	47uH			
L 4009	L1790052	M.RFC	LAPO2TA3R3K	3.3uH			
L 4010	L1790066	M.RFC	LAPO2TA470K	47uH			
L 4011	L1790053	M.RFC	LAPO2TA3R9K	3.9uH			
L 4012	L1790066	M.RFC	LAPO2TA470K	47uH			
L 4013	L1790054	M.RFC	LAPO2TA4R7K	4.7uH			
L 4014	L1790066	M.RFC	LAPO2TA470K	47uH			
L 4015	L1790055	M.RFC	LAPO2TA5R6K	5.6uH			
L 4016	L1790072	M.RFC	LAPO2TA151K	150uH			
L 4017	L1790072	M.RFC	LAPO2TA151K	150uH			
L 4018	L1790072	M.RFC	LAPO2TA151K	150uH			
L 4019	L1790072	M.RFC	LAPO2TA151K	150uH			
L 4020	L1790072	M.RFC	LAPO2TA151K	150uH			
L 4021	L1790060	M.RFC	LAPO2TA150K	15uH			
L 4022	L1790061	M.RFC	LAPO2TA180K	18uH			
L 4023	L1790058	M.RFC	LAPO2TA100K	10uH			
Q 4001	G3305354B	TRANSISTOR	2SC535BTZ				
Q 4002	G3305354B	TRANSISTOR	2SC535BTZ				
Q 4003	G3801921B	FET	2SK192A-BL				
Q 4004	G3050003	TRANSISTOR	BA1A4P-T				
Q 4005	G3801921B	FET	2SK192A-BL				
Q 4006	G3050003	TRANSISTOR	BA1A4P-T				
Q 4007	G3801921B	FET	2SK192A-BL				
Q 4008	G3050003	TRANSISTOR	BA1A4P-T				
Q 4009	G3801921B	FET	2SK192A-BL				
Q 4010	G3050003	TRANSISTOR	BA1A4P-T				
Q 4011	G3801921B	FET	2SK192A-BL				
Q 4012	G3050003	TRANSISTOR	BA1A4P-T				
Q 4013	G3307320B	TRANSISTOR	2SC732TMBL				
Q 4014	G3801844Y	FET	2SK184Y(TPE4)				
Q 4015	G3801924G	FET	2SK192AGR(TPE4)				
Q 4016	G3305354B	TRANSISTOR	2SC535BTZ				
Q 4017	G1090101	IC	UPC1037H				
Q 4018	G3801924G	FET	2SK192AGR(TPE4)				
Q 4019	G3305354B	TRANSISTOR	2SC535BTZ				
Q 4020	G1090834	IC	CX-7925B				
Q 4021	G3304584C	TRANSISTOR	2SC458CTZ				
Q 4022	G3802414G	FET	2SK241GR(TPE4)				
Q 4023	G3304584C	TRANSISTOR	2SC458CTZ				
Q 4024	G3304584C	TRANSISTOR	2SC458CTZ				
Q 4025	G1091006	IC	HD74HC74P				
Q 4026	G1090012	IC	SN16913P				
Q 4027	G3305354B	TRANSISTOR	2SC535BTZ				
Q 4028	G1090012	IC	SN16913P				
Q 4029	G3305354B	TRANSISTOR	2SC535BTZ				
Q 4030	G3801924G	FET	2SK192AGR(TPE4)				
Q 4031	G3305354B	TRANSISTOR	2SC535BTZ				
R 4001	J07225101	CARBON FILM RES.	RD16TPJ101	100	1/6W		
R 4002	J07225470	CARBON FILM RES.	RD16TPJ470	47	1/6W		
R 4003	J07225104	CARBON FILM RES.	RD16TPJ104	100K	1/6W		
R 4004	J07225101	CARBON FILM RES.	RD16TPJ101	100	1/6W		
R 4005	J07225471	CARBON FILM RES.	RD16TPJ471	470	1/6W		

REF.	YAESU P/N	DESCRIPTION	MFGR'S DESIG	VALUE	WV	TOL.	VERS.
R 4006	J07225472	CARBON FILM RES.	RD16TPJ472	4.7K	1/6W		
R 4007	J07225101	CARBON FILM RES.	RD16TPJ101	100	1/6W		
R 4008	J07225221	CARBON FILM RES.	RD16TPJ221	220	1/6W		
R 4009	J07225104	CARBON FILM RES.	RD16TPJ104	100K	1/6W		
R 4010	J07225104	CARBON FILM RES.	RD16TPJ104	100K	1/6W		
R 4011	J07225151	CARBON FILM RES.	RD16TPJ151	150	1/6W		
R 4012	J07225332	CARBON FILM RES.	RD16TPJ332	3.3K	1/6W		
R 4013	J07225221	CARBON FILM RES.	RD16TPJ221	220	1/6W		
R 4014	J07225104	CARBON FILM RES.	RD16TPJ104	100K	1/6W		
R 4015	J07225104	CARBON FILM RES.	RD16TPJ104	100K	1/6W		
R 4016	J07225151	CARBON FILM RES.	RD16TPJ151	150	1/6W		
R 4017	J07225332	CARBON FILM RES.	RD16TPJ332	3.3K	1/6W		
R 4018	J07225221	CARBON FILM RES.	RD16TPJ221	220	1/6W		
R 4019	J07225104	CARBON FILM RES.	RD16TPJ104	100K	1/6W		
R 4020	J07225104	CARBON FILM RES.	RD16TPJ104	100K	1/6W		
R 4021	J07225151	CARBON FILM RES.	RD16TPJ151	150	1/6W		
R 4022	J07225332	CARBON FILM RES.	RD16TPJ332	3.3K	1/6W		
R 4023	J07225221	CARBON FILM RES.	RD16TPJ221	220	1/6W		
R 4024	J07225104	CARBON FILM RES.	RD16TPJ104	100K	1/6W		
R 4025	J07225104	CARBON FILM RES.	RD16TPJ104	100K	1/6W		
R 4026	J07225151	CARBON FILM RES.	RD16TPJ151	150	1/6W		
R 4027	J07225332	CARBON FILM RES.	RD16TPJ332	3.3K	1/6W		
R 4028	J07225221	CARBON FILM RES.	RD16TPJ221	220	1/6W		
R 4029	J07225104	CARBON FILM RES.	RD16TPJ104	100K	1/6W		
R 4030	J07225104	CARBON FILM RES.	RD16TPJ104	100K	1/6W		
R 4031	J07225151	CARBON FILM RES.	RD16TPJ151	150	1/6W		
R 4032	J07225332	CARBON FILM RES.	RD16TPJ332	3.3K	1/6W		
R 4033	J07225102	CARBON FILM RES.	RD16TPJ102	1K	1/6W		
R 4034	J07225152	CARBON FILM RES.	RD16TPJ152	1.5K	1/6W		
R 4035	J07225331	CARBON FILM RES.	RD16TPJ331	330	1/6W		
R 4036	J07225182	CARBON FILM RES.	RD16TPJ182	1.8K	1/6W		
R 4037	J07225681	CARBON FILM RES.	RD16TPJ681	680	1/6W		
R 4038	J07225562	CARBON FILM RES.	RD16TPJ562	5.6K	1/6W		
R 4039	J07225101	CARBON FILM RES.	RD16TPJ101	100	1/6W		
R 4040	J07225103	CARBON FILM RES.	RD16TPJ103	10K	1/6W		
R 4041	J07225471	CARBON FILM RES.	RD16TPJ471	470	1/6W		
R 4042	J07225101	CARBON FILM RES.	RD16TPJ101	100	1/6W		
R 4043	J07225154	CARBON FILM RES.	RD16TPJ154	150K	1/6W		
R 4044	J07225101	CARBON FILM RES.	RD16TPJ101	100	1/6W		
R 4045	J07225471	CARBON FILM RES.	RD16TPJ471	470	1/6W		
R 4046	J07225391	CARBON FILM RES.	RD16TPJ391	390	1/6W		
R 4047	J07225331	CARBON FILM RES.	RD16TPJ331	330	1/6W		
R 4048	J07225471	CARBON FILM RES.	RD16TPJ471	470	1/6W		
R 4049	J07225154	CARBON FILM RES.	RD16TPJ154	150K	1/6W		
R 4050	J07225102	CARBON FILM RES.	RD16TPJ102	1K	1/6W		
R 4052	J07225101	CARBON FILM RES.	RD16TPJ101	100	1/6W		
R 4053	J07225221	CARBON FILM RES.	RD16TPJ221	220	1/6W		
R 4054	J07225221	CARBON FILM RES.	RD16TPJ221	220	1/6W		
R 4055	J07225221	CARBON FILM RES.	RD16TPJ221	220	1/6W		
R 4056	J07225103	CARBON FILM RES.	RD16TPJ103	10K	1/6W		
R 4057	J07225103	CARBON FILM RES.	RD16TPJ103	10K	1/6W		
R 4058	J07225104	CARBON FILM RES.	RD16TPJ104	100K	1/6W		
R 4059	J07225101	CARBON FILM RES.	RD16TPJ101	100	1/6W		
R 4060	J07225104	CARBON FILM RES.	RD16TPJ104	100K	1/6W		
R 4061	J07225331	CARBON FILM RES.	RD16TPJ331	330	1/6W		

REF.	YAESU P/N	DESCRIPTION	MFGR'S DESIG	VALUE	WV	TOL.	VERS.
R 4062	J07225331	CARBON FILM RES.	RD16TPJ331	330	1/6W		
R 4063	J07225103	CARBON FILM RES.	RD16TPJ103	10K	1/6W		
R 4064	J07225273	CARBON FILM RES.	RD16TPJ273	27K	1/6W		
R 4065	J07225471	CARBON FILM RES.	RD16TPJ471	470	1/6W		
R 4066	J07225101	CARBON FILM RES.	RD16TPJ101	100	1/6W		
R 4067	J07225220	CARBON FILM RES.	RD16TPJ220	22	1/6W		
R 4068	J07225104	CARBON FILM RES.	RD16TPJ104	100K	1/6W		
R 4069	J07225102	CARBON FILM RES.	RD16TPJ102	1K	1/6W		
R 4070	J07225472	CARBON FILM RES.	RD16TPJ472	4.7K	1/6W		
R 4071	J07225681	CARBON FILM RES.	RD16TPJ681	680	1/6W		
R 4072	J07225101	CARBON FILM RES.	RD16TPJ101	100	1/6W		
R 4073	J07225101	CARBON FILM RES.	RD16TPJ101	100	1/6W		
R 4074	J07225471	CARBON FILM RES.	RD16TPJ471	470	1/6W		
R 4075	J07225470	CARBON FILM RES.	RD16TPJ470	47	1/6W		
R 4076	J07225333	CARBON FILM RES.	RD16TPJ333	33K	1/6W		
R 4077	J07225103	CARBON FILM RES.	RD16TPJ103	10K	1/6W		
R 4078	J07225101	CARBON FILM RES.	RD16TPJ101	100	1/6W		
R 4079	J07225101	CARBON FILM RES.	RD16TPJ101	100	1/6W		
R 4080	J07225471	CARBON FILM RES.	RD16TPJ471	470	1/6W		
R 4081	J07225154	CARBON FILM RES.	RD16TPJ154	150K	1/6W		
R 4082	J07225101	CARBON FILM RES.	RD16TPJ101	100	1/6W		
R 4083	J07225221	CARBON FILM RES.	RD16TPJ221	220	1/6W		
R 4084	J07225473	CARBON FILM RES.	RD16TPJ473	47K	1/6W		
R 4085	J07225101	CARBON FILM RES.	RD16TPJ101	100	1/6W		
R 4086	J07225103	CARBON FILM RES.	RD16TPJ103	10K	1/6W		
R 4087	J07225333	CARBON FILM RES.	RD16TPJ333	33K	1/6W		
R 4088	J07225470	CARBON FILM RES.	RD16TPJ470	47	1/6W		
R 4089	J07225471	CARBON FILM RES.	RD16TPJ471	470	1/6W		
R 4090	J07225470	CARBON FILM RES.	RD16TPJ470	47	1/6W		
R 4091	J07225470	CARBON FILM RES.	RD16TPJ470	47	1/6W		
R 4092	J07225101	CARBON FILM RES.	RD16TPJ101	100	1/6W		
T 4001	L0021401	COIL	0.28U				
T 4002	L0021400	COIL	0.36U				
T 4003	L0021399	COIL	0.42U				
T 4004	L0021599	COIL	50.0M				
T 4005	L0021599	COIL	50.0M				
T 4006	L0022078	COIL					
T 4007	L0022079	COIL					
T 4008	L0022080	COIL					
T 4009	L0022081	COIL					
T 4010	L0022082	COIL					
T 4011	L0021295	COIL	10.5M				
T 4012	L0021295	COIL	10.5M				
T 4013	L0021941	COIL	40.96M R12-J771A				
T 4014	L0021511	07 RF TRANS	42.0M				
T 4015	L0021511	07 RF TRANS	42.0M				
T 4016	L0021511	07 RF TRANS	42.0M				
T 4017	L0021560	COIL	36.3M				
T 4018	L0021560	COIL	36.3M				
T 4019	L0021560	COIL	36.3M				
TC4001	K91000085	TRIMMER CAP.	VCT51C122	10pF			W/O TCXO-2
TP4001	Q5000050	TP-K	IPS-1136				

REF.	YAESU P/N	DESCRIPTION	MFGR'S DESIG	VALUE	WV	TOL.	VERS.
TP4002	Q5000050	TP-K	IPS-1136				
TP4003	Q5000050	TP-K	IPS-1136				
TP4004	Q5000050	TP-K	IPS-1136				
X 4001	H0102990	XTAL		10.48576MH			W/O TCXO-2
X 4001	H9500160	XTAL	H-GF1041				W TCXO-2
X 4002	H0102991	XTAL		36.269MHZ			
	R7067500	MODE SWITCH INSULATOR					
	R0136960	FITTING R					
	R0136970	FITTING L					
	R0128050	SHIELD CASE					
	R0128070	SHIELD CASE(2 pcs)					
	R0137140	SHIELD CASE					
	R0137050	SHIELD CASE					
	R0137060	SHIELD COVER					
	R7076390	XTAL SPACER					

Notes:

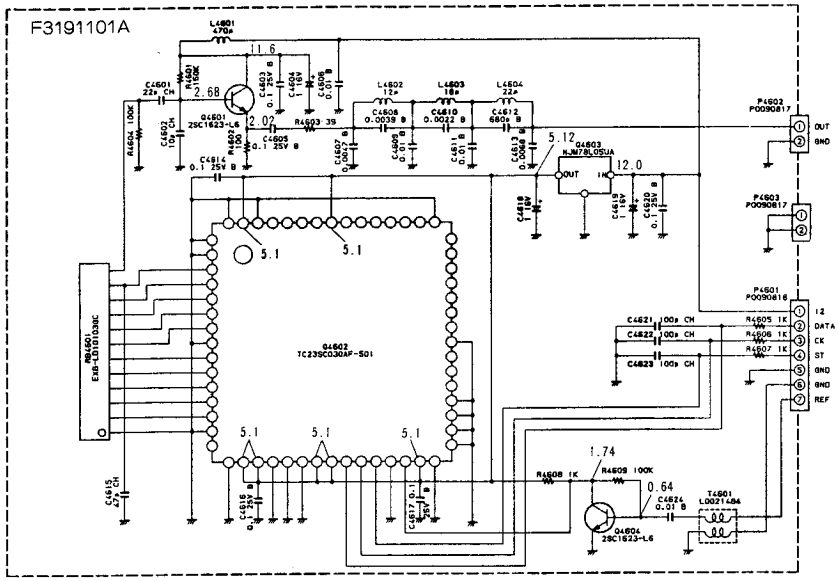

NOTE:
RESISTOR VALUES ARE IN Ω, 1/10W ;
CAPACITOR VALUES ARE IN μF, 50V ;
INDUCTOR VALUES ARE IN H
UNLESS OTHERWISE NOTED.

Receive DC Voltage
Measuring Conditions
Frequency: 14.200MHz
Mode: CW

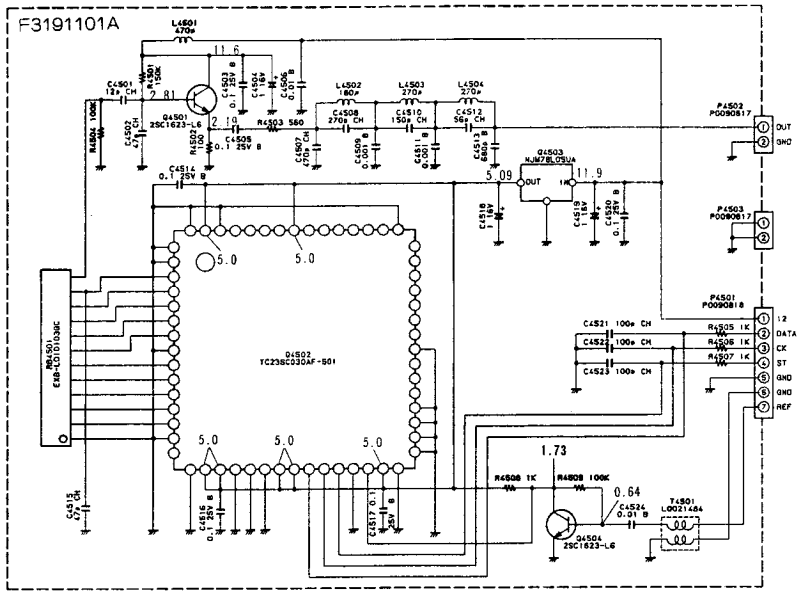

NOTE:
RESISTOR VALUES ARE IN Ω, 1/10W ;
CAPACITOR VALUES ARE IN μF, 50V ;
(T) CAPACITOR VALUES ARE TANTALUM ;
INDUCTOR VALUES ARE IN H
UNLESS OTHERWISE NOTED.

Receive DC Voltage
Measuring Conditions
Frequency: 14.200MHz
Mode: CW

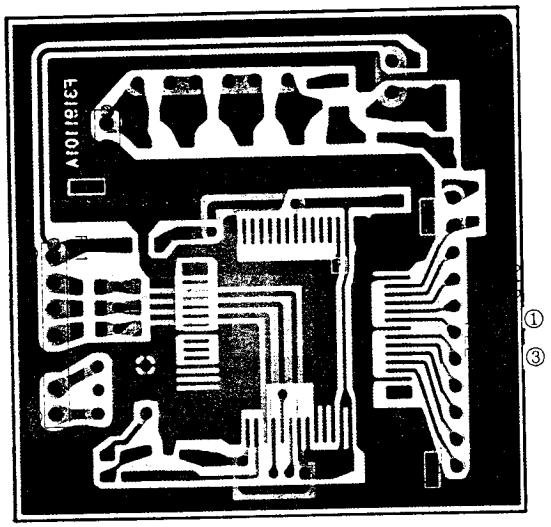

("component" side)

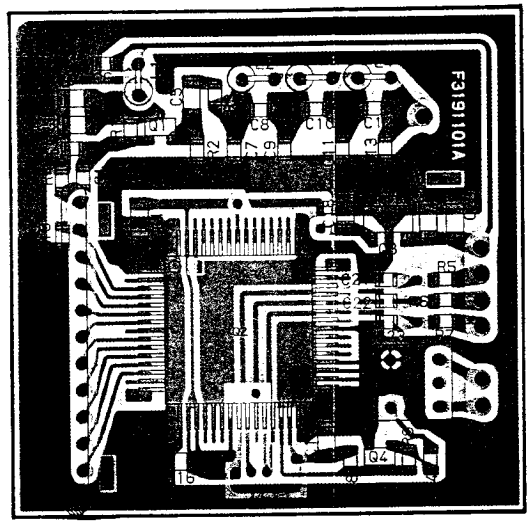

("chip only" side)

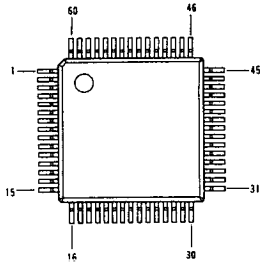

TC23SC030AF-501
(Q4502, 4602)

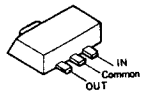

NJM78L05UA (05)
(Q4503, 4603)

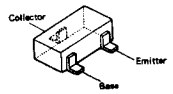

2SC1623(L6)
(Q4501, 4504, 4601, 4604)

REF.	YAESU P/N	DESCRIPTION	MFGR'S DESIG	VALUE	WV	TOL.	VERS.
		*** PLL DDS UNIT ***					
	CA0420001	P.C.B. W COMP.					
	F3191101A	P.C.B. W/O COMP.					
C 4501	K22170213	CHIP CAP.	GRM40CH120J50PT	12pF	50V	CH	
C 4502	K22170227	CHIP CAP.	GRM40CH470J50PT	47pF	50V	CH	
C 4503	K22141809	CHIP CAP.	GRM42-6B104M25PT	0.1uF	25V	B	
C 4504	K78120009	TANTALUM CHIP CAP.	TESVA1C105M1-8R	1uF	16V		
C 4505	K22141809	CHIP CAP.	GRM42-6B104M25PT	0.1uF	25V	B	
C 4506	K22170817	CHIP CAP.	GRM40B103M50PT	0.01uF	50V	B	
C 4507	K22170251	CHIP CAP.	GRM40CH471J50PT	470pF	50V	CH	
C 4508	K22170245	CHIP CAP.	GRM40CH271J50PT	270pF	50V	CH	
C 4509	K22170805	CHIP CAP.	GRM40B102M50PT	0.001uF	50V	B	
C 4510	K22170239	CHIP CAP.	GRM40CH151J50PT	150pF	50V	CH	
C 4511	K22170805	CHIP CAP.	GRM40B102M50PT	0.001uF	50V	B	
C 4512	K22170229	CHIP CAP.	GRM40CH560J50PT	56pF	50V	CH	
C 4513	K22170803	CHIP CAP.	GRM40B681M50PT	680pF	50V	B	
C 4514	K22141809	CHIP CAP.	GRM42-6B104M25PT	0.1uF	25V	B	
C 4515	K22170227	CHIP CAP.	GRM40CH470J50PT	47pF	50V	CH	
C 4516	K22141809	CHIP CAP.	GRM42-6B104M25PT	0.1uF	25V	B	
C 4517	K22141809	CHIP CAP.	GRM42-6B104M25PT	0.1uF	25V	B	
C 4518	K78120009	TANTALUM CHIP CAP.	TESVA1C105M1-8R	1uF	16V		
C 4519	K78120009	TANTALUM CHIP CAP.	TESVA1C105M1-8R	1uF	16V		
C 4520	K22141809	CHIP CAP.	GRM42-6B104M25PT	0.1uF	25V	B	
C 4521	K22170235	CHIP CAP.	GRM40CH101J50PT	100pF	50V	CH	
C 4522	K22170235	CHIP CAP.	GRM40CH101J50PT	100pF	50V	CH	
C 4523	K22170235	CHIP CAP.	GRM40CH101J50PT	100pF	50V	CH	
C 4524	K22170817	CHIP CAP.	GRM40B103M50PT	0.01uF	50V	B	
L 4501	L1190226	M.RFC	LAL03NA471K	470uH			
L 4502	L1190221	M.RFC	LAL03NA181K	180uH			
L 4503	L1190223	M.RFC	LAL03NA271K	270uH			
L 4504	L1190223	M.RFC	LAL03NA271K	270uH			
P 4501	P0090818	CONNECTOR	SB07P-HVQ-34				
P 4502	P0090817	CONNECTOR	SB02P-HVQ-34				
P 4503	P0090817	CONNECTOR	SB02P-HVQ-34				
Q 4501	G3316237F	TRANSISTOR	2SC1623-T2BL6				
Q 4502	G1090970	IC	TC23SC030AF-501				
Q 4503	G1090887	IC	NJM78L05UA				
Q 4504	G3316237F	TRANSISTOR	2SC1623-T2BL6				
R 4501	J24205154	CHIP RES.	RMC1/10T 154J	150K	1/10W		
R 4502	J24205101	CHIP RES.	RMC1/10T 101J	100	1/10W		
R 4503	J24205561	CHIP RES.	RMC1/10T 561J	560	1/10W		
R 4504	J24205104	CHIP RES.	RMC1/10T 104J	100K	1/10W		
R 4505	J24205102	CHIP RES.	RMC1/10T 102J	1K	1/10W		
R 4506	J24205102	CHIP RES.	RMC1/10T 102J	1K	1/10W		
R 4507	J24205102	CHIP RES.	RMC1/10T 102J	1K	1/10W		
R 4508	J24205102	CHIP RES.	RMC1/10T 102J	1K	1/10W		
R 4509	J24205104	CHIP RES.	RMC1/10T 104J	100K	1/10W		

PLL DDS Unit

REF.	YAESU P/N	DESCRIPTION	MFGR'S DESIG	VALUE	WV	TOL.	VERS.
RB4501	J40900171	BLOCK RES.	EXB-LD10103GC	EXB-LD1010			
T 4501	L0021484	COIL					
	R0137010	SHIELD PLATE					

REF.	YAESU P/N	DESCRIPTION	MFGR'S DESIG	VALUE	WV	TOL.	VERS.
		*** CAR DDS UNIT ***					
	CA0425001	P.C.B. W COMP.					
	F3191101A	P.C.B. W/O COMP.					
C 4601	K22170219	CHIP CAP.	GRM40CH220J50PT	22pF	50V	CH	
C 4602	K22170211	CHIP CAP.	GRM40CH100D50PT	10pF	50V	CH	
C 4603	K22141809	CHIP CAP.	GRM42-6B104M25PT	0.1uF	25V	B	
C 4604	K78120009	TANTALUM CHIP CAP.	TESVA1C105M1-8R	1uF	16V		
C 4605	K22141809	CHIP CAP.	GRM42-6B104M25PT	0.1uF	25V	B	
C 4606	K22170817	CHIP CAP.	GRM40B103M50PT	0.01uF	50V	B	
C 4607	K22170813	CHIP CAP.	GRM40B472M50PT	0.0047uF	50V	B	
C 4608	K22170812	CHIP CAP.	GRM40B392M50PT	0.0039	50V	B	
C 4609	K22170817	CHIP CAP.	GRM40B103M50PT	0.01uF	50V	B	
C 4610	K22170809	CHIP CAP.	GRM40B222M50PT	0.0022uF	50V	B	
C 4611	K22170817	CHIP CAP.	GRM40B103M50PT	0.01uF	50V	B	
C 4612	K22170803	CHIP CAP.	GRM40B681M50PT	680pF	50V	B	
C 4613	K22170815	CHIP CAP.	GRM40B682M50PT	0.0068uF	50V	B	
C 4614	K22141809	CHIP CAP.	GRM42-6B104M25PT	0.1uF	25V	B	
C 4615	K22170227	CHIP CAP.	GRM40CH470J50PT	47pF	50V	CH	
C 4616	K22141809	CHIP CAP.	GRM42-6B104M25PT	0.1uF	25V	B	
C 4617	K22141809	CHIP CAP.	GRM42-6B104M25PT	0.1uF	25V	B	
C 4618	K78120009	TANTALUM CHIP CAP.	TESVA1C105M1-8R	1uF	16V		
C 4619	K78120009	TANTALUM CHIP CAP.	TESVA1C105M1-8R	1uF	16V		
C 4620	K22141809	CHIP CAP.	GRM42-6B104M25PT	0.1uF	25V	B	
C 4621	K22170235	CHIP CAP.	GRM40CH101J50PT	100pF	50V	CH	
C 4622	K22170235	CHIP CAP.	GRM40CH101J50PT	100pF	50V	CH	
C 4623	K22170235	CHIP CAP.	GRM40CH101J50PT	100pF	50V	CH	
C 4624	K22170817	CHIP CAP.	GRM40B103M50PT	0.01uF	50V	B	
L 4601	L1190226	M.RFC	LAL03NA471K	470uH			
L 4602	L1190207	M.RFC	LAL03NA120K	12uH			
L 4603	L1190209	M.RFC	LAL03NA180K	18uH			
L 4604	L1190210	M.RFC	LAL03NA220K	22uH			
P 4601	P0090818	CONNECTOR	SB07P-HVQ-34				
P 4602	P0090817	CONNECTOR	SB02P-HVQ-34				
P 4603	P0090817	CONNECTOR	SB02P-HVQ-34				
Q 4601	G3316237F	TRANSISTOR	2SC1623-T2BL6				
Q 4602	G1090970	IC	TC23SC030AF-501				
Q 4603	G1090887	IC	NJM78L05UA				
Q 4604	G3316237F	TRANSISTOR	2SC1623-T2BL6				
R 4601	J24205154	CHIP RES.	RMC1/10T 154J	150K	1/10W		
R 4602	J24205101	CHIP RES.	RMC1/10T 101J	100	1/10W		
R 4603	J24205390	CHIP RES.	RMC1/10T 390J	39	1/10W		
R 4604	J24205104	CHIP RES.	RMC1/10T 104J	100K	1/10W		
R 4605	J24205102	CHIP RES.	RMC1/10T 102J	1K	1/10W		
R 4606	J24205102	CHIP RES.	RMC1/10T 102J	1K	1/10W		
R 4607	J24205102	CHIP RES.	RMC1/10T 102J	1K	1/10W		
R 4608	J24205102	CHIP RES.	RMC1/10T 102J	1K	1/10W		
R 4609	J24205104	CHIP RES.	RMC1/10T 104J	100K	1/10W		

Carrier DDS Unit

REF.	YAESU P/N	DESCRIPTION	MFGR'S DESIG	VALUE	WV	TOL.	VERS.
RB4601	J40900171	BLOCK RES.	EXB-LD10103GC	EXB-LD1010			
T 4601	L0021484	COIL					
	R0137010	SHIELD PLATE					

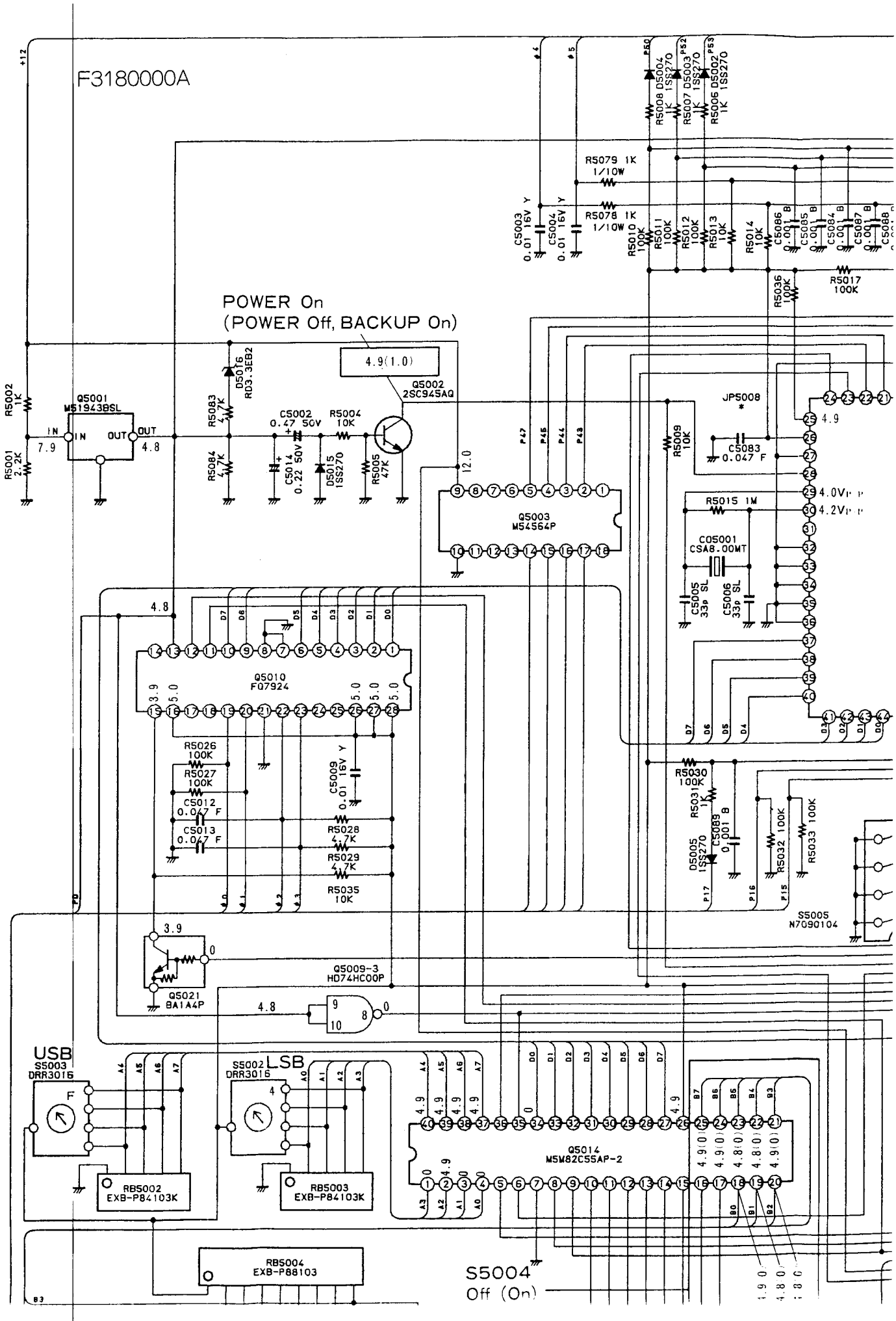
F3180000A
POWER On
(POWER Off, BACKUP On)
4.9(1.0)
Q5002
2SC945AQ
Q5001
M51943BSL
Q5003
M54564P
Q5010
FQ7924
Q5014
M5M82C55AP-2
Q5009-3
HD74HC00P
Q5021
BA1A4P
S5003
DRR3016
S5002
DRR3016
USB
LSB
RB5002
EXB-P84103K
RB5003
EXB-P84103K
RB5004
EXB-P88103
S5004
Off (On)
S5005
N7090104
JP5008
C5001
CSA8.00MT
4.0Vp-p
4.2Vp-p

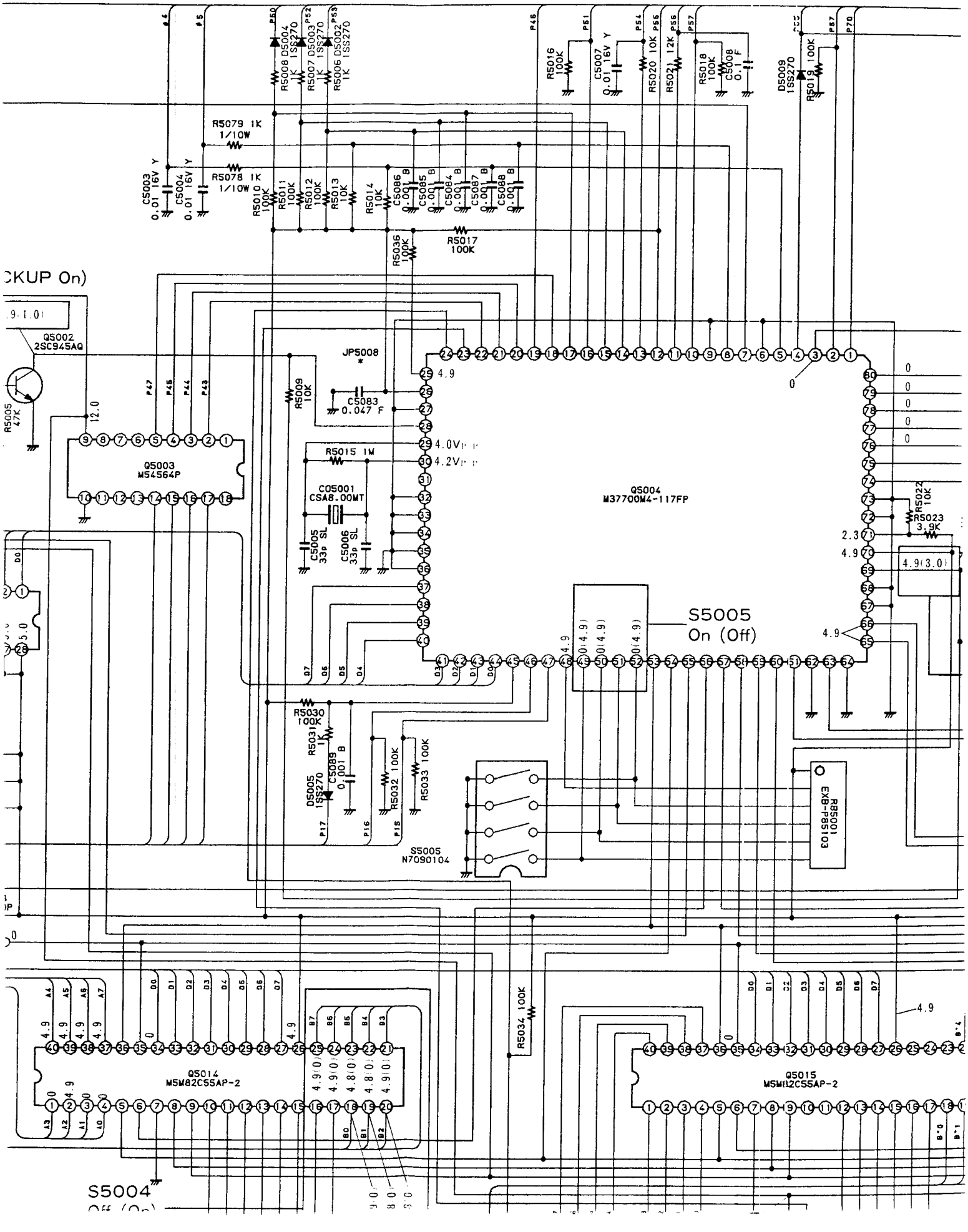
CKUP On)
Q5002
2SC945AQ
R5005
47K
Q5003
M54564P
JP5008
C5083
0.047 F
R5009
10K
R5015 1M
C05001
CSA8.00MT
C5005
33p SL
C5006
33p SL
Q5004
M37700M4-117FP
S5005
On (Off)
S5005
N7090104
R5030
100K
R5031
1K
C5089
0.001 B
D5005
1SS270
R5032 100K
R5033 100K
R5034 100K
R5036
100K
R5017
100K
R5079 1K
1/10W
R5078 1K
1/10W
C5003
0.01 16V Y
C5004
0.01 16V Y
R5010
100K
R5011
100K
R5012
100K
R5013
10K
R5014
10K
C5086
0.001 B
C5085
0.001 B
C5084
0.001 B
C5087
0.001 B
C5088
0.001 B
R5008 D5004
1K 1SS270
R5007 D5003
1K 1SS270
R5006 D5002
1K 1SS270
R5016
100K
C5007
0.01 16V Y
R5020 10K
R5021 12K
R5018
100K
C5008
0.1 F
D5009
1SS270
R5019 100K
R5022
10K
R5023
3.9K
4.9(3.0)
Q5014
M5M82C55AP-2
Q5015
M5M82C55AP-2
S5004

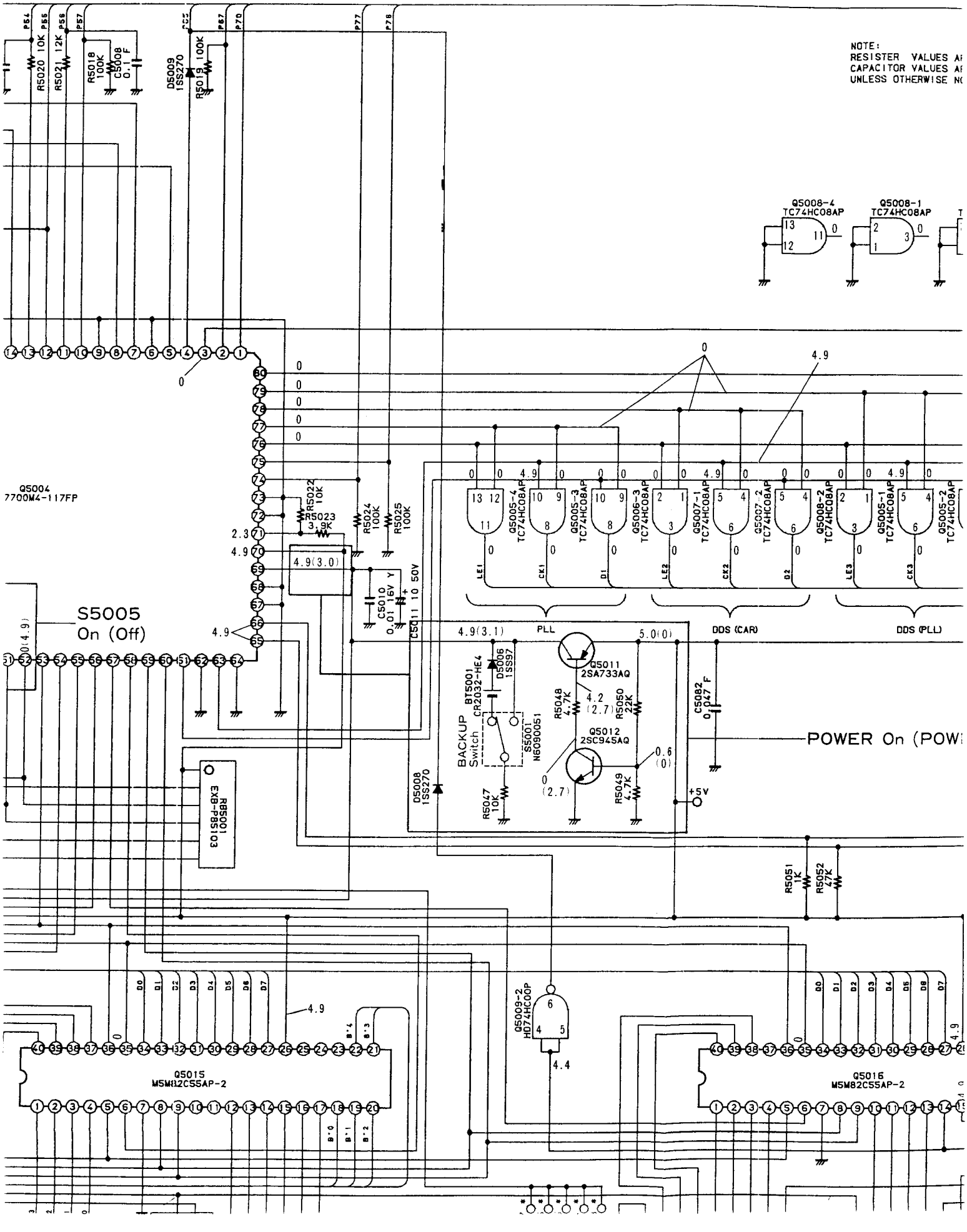
NOTE:
RESISTER VALUES A
CAPACITOR VALUES A
UNLESS OTHERWISE N
Q5008-4
TC74HC08AP
Q5008-1
TC74HC08AP
Q5004
7700M4-117FP
S5005
On (Off)
R5020 10K
R5021 12K
R5018 100K
C5008 0.1 F
D5009 1SS270
R5019 100K
R5022 10K
R5023 3.9K
R5024 100K
R5025 100K
C5010 0.01 16V Y
C5011 10 50V
Q5005-4 TC74HC08AP
Q5005-3 TC74HC08AP
Q5006-3 TC74HC08AP
Q5007-1 TC74HC08AP
Q5007-2 TC74HC08AP
Q5008-2 TC74HC08AP
Q5005-1 TC74HC08AP
Q5005-2 TC74HC08AP
PLL
DDS (CAR)
DDS (PLL)
Q5011 2SA733AQ
Q5012 2SC945AQ
BT5001 CR2032-HE4
D5006 1SS97
BACKUP Switch
S5001 N6090051
R5048 4.7K
R5050 22K
R5049 4.7K
R5047 10K
D5008 1SS270
C5082 0.047 F
+5V
POWER On (POW
RB5001 EXB-PB5103
R5051 1K
R5052 47K
Q5009-2 HD74HC00P
Q5015 M5M82C55AP-2
Q5016 M5M82C55AP-2

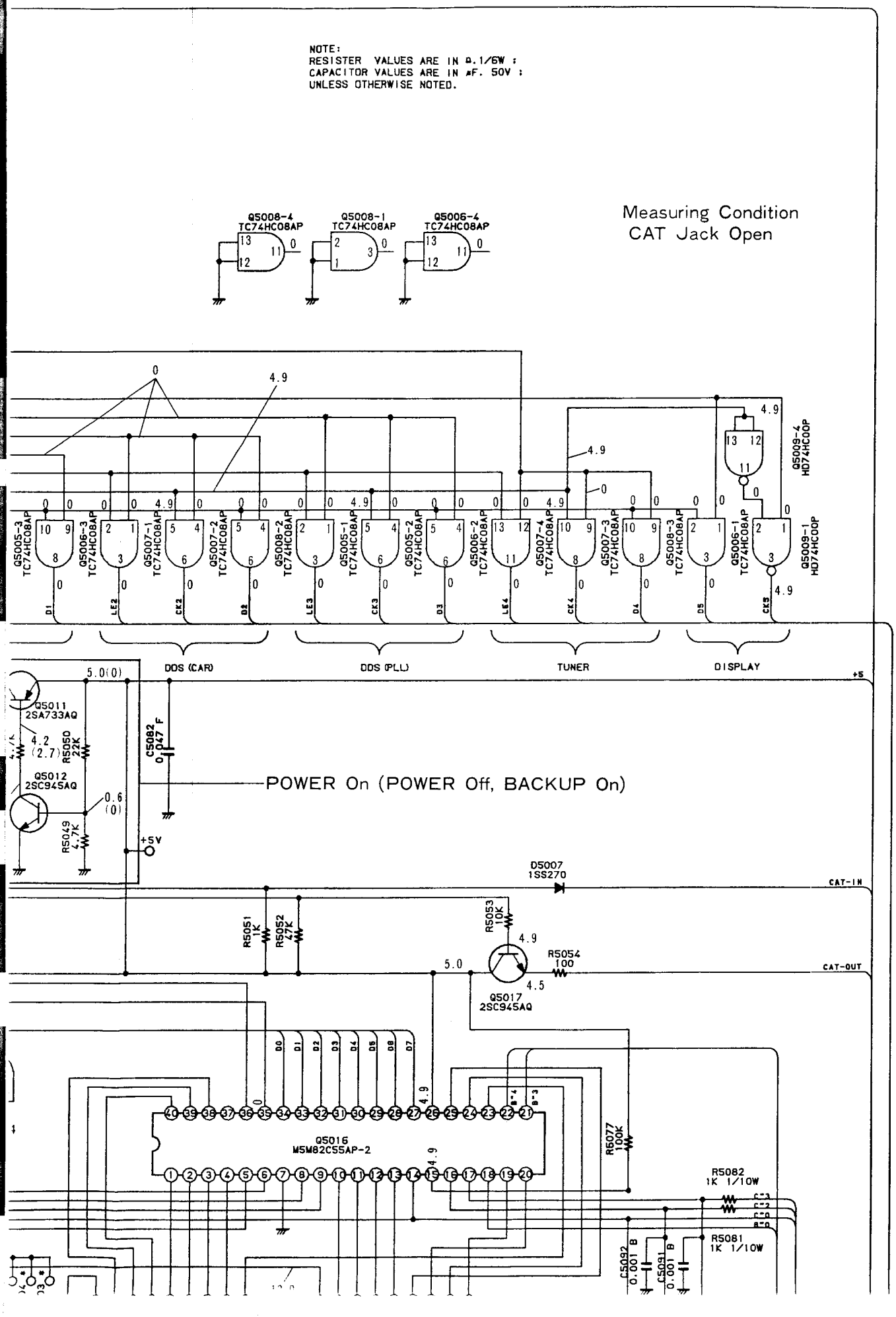
NOTE:
RESISTER VALUES ARE IN Ω.1/6W :
CAPACITOR VALUES ARE IN μF. 50V :
UNLESS OTHERWISE NOTED.
Measuring Condition
CAT Jack Open
Q5008-4 TC74HC08AP
Q5008-1 TC74HC08AP
Q5006-4 TC74HC08AP
Q5005-3 TC74HC08AP
Q5006-3 TC74HC08AP
Q5007-1 TC74HC08AP
Q5007-2 TC74HC08AP
Q5008-2 TC74HC08AP
Q5005-1 TC74HC08AP
Q5005-2 TC74HC08AP
Q5006-2 TC74HC08AP
Q5007-4 TC74HC08AP
Q5007-3 TC74HC08AP
Q5008-3 TC74HC08AP
Q5006-1 TC74HC08AP
Q5009-4 HD74HC00P
Q5009-1 HD74HC00P
DDS (CAR)
DDS (PLL)
TUNER
DISPLAY
+5
Q5011 2SA733AQ
Q5012 2SC945AQ
R5050 22K
R5049 4.7K
C5082 0.047 F
POWER On (POWER Off, BACKUP On)
+5V
D5007 1SS270
CAT-IN
CAT-OUT
R5051 1K
R5052 47K
R5053 10K
R5054 100
Q5017 2SC945AQ
Q5016 M5M82C55AP-2
R5077 100K
R5082 1K 1/10W
R5081 1K 1/10W
C5092 0.001 B
C5091 0.001 B

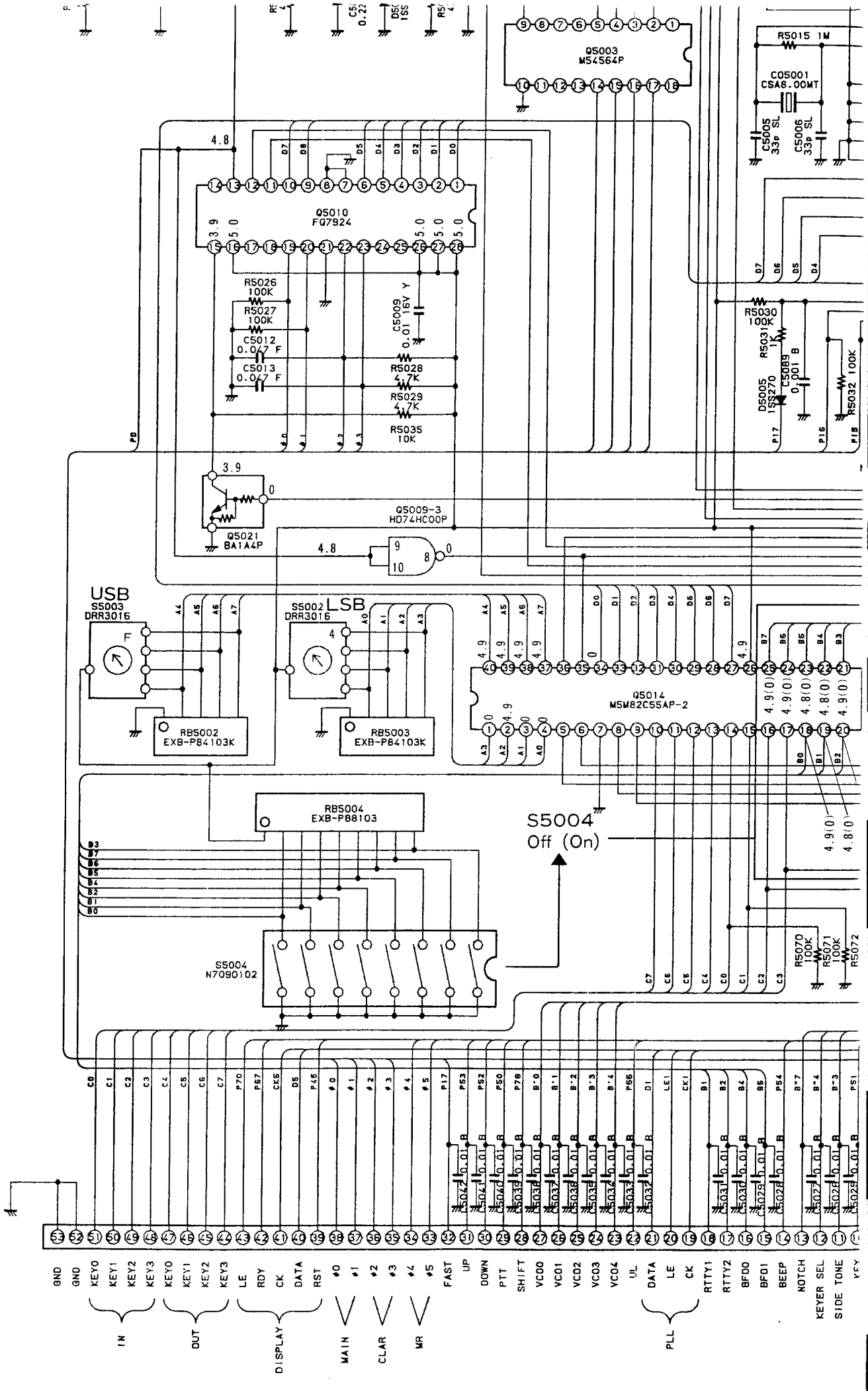
Q5003
M54564P
R5015 1M
C05001
CSA8.00MT
C5005
33p SL
C5006
33p SL
Q5010
FQ7924
R5026
100K
R5027
100K
C5012
0.047 F
C5013
0.047 F
C5009
0.01 16V Y
R5028
4.7K
R5029
4.7K
R5035
10K
R5030
100K
R5031
1K
C5089
0.001 B
D5005
1SS270
R5032 100K
Q5009-3
HD74HC00P
Q5021
BA1A4P
USB
S5003
DRR3016
LSB
S5002
DRR3016
RB5002
EXB-P84103K
RB5003
EXB-P84103K
Q5014
M5M82C55AP-2
RB5004
EXB-P88103
S5004
Off (On)
S5004
N7090102
R5070
100K
R5071
100K
R5072
GND
KEY0
KEY1
KEY2
KEY3
LE
RDY
CK
DATA
RST
FAST
UP
DOWN
PTT
SHIFT
VCO0
VCO1
VCO2
VCO3
VCO4
UL
DATA
LE
CK
RTTY1
RTTY2
BFO0
BFO1
BEEP
NOTCH
KEYER SEL
SIDE TONE
IN
OUT
DISPLAY
MAIN
CLAR
MR
PLL

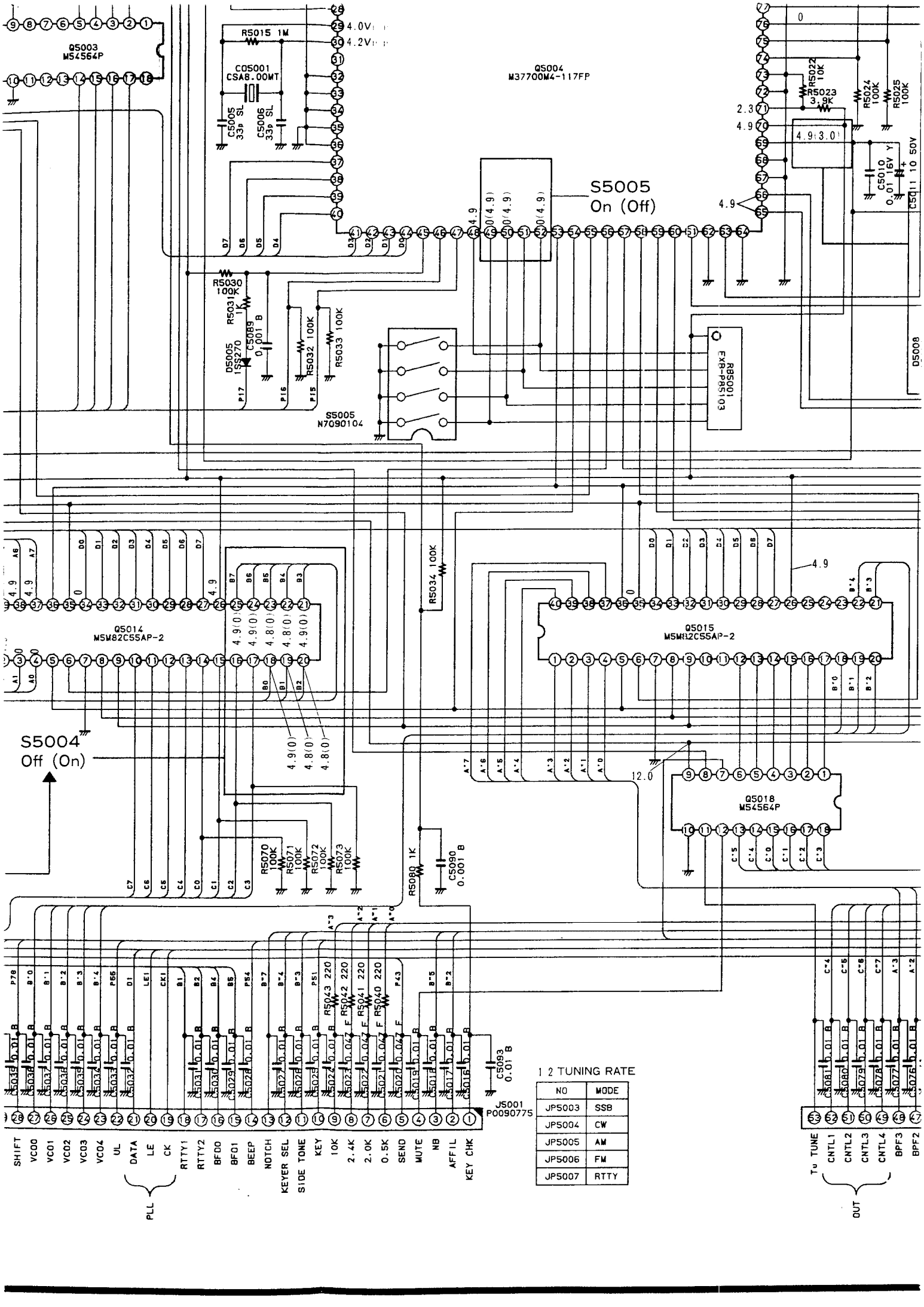

NO	MODE
JP5003	SSB
JP5004	CW
JP5005	AM
JP5006	FM
JP5007	RTTY

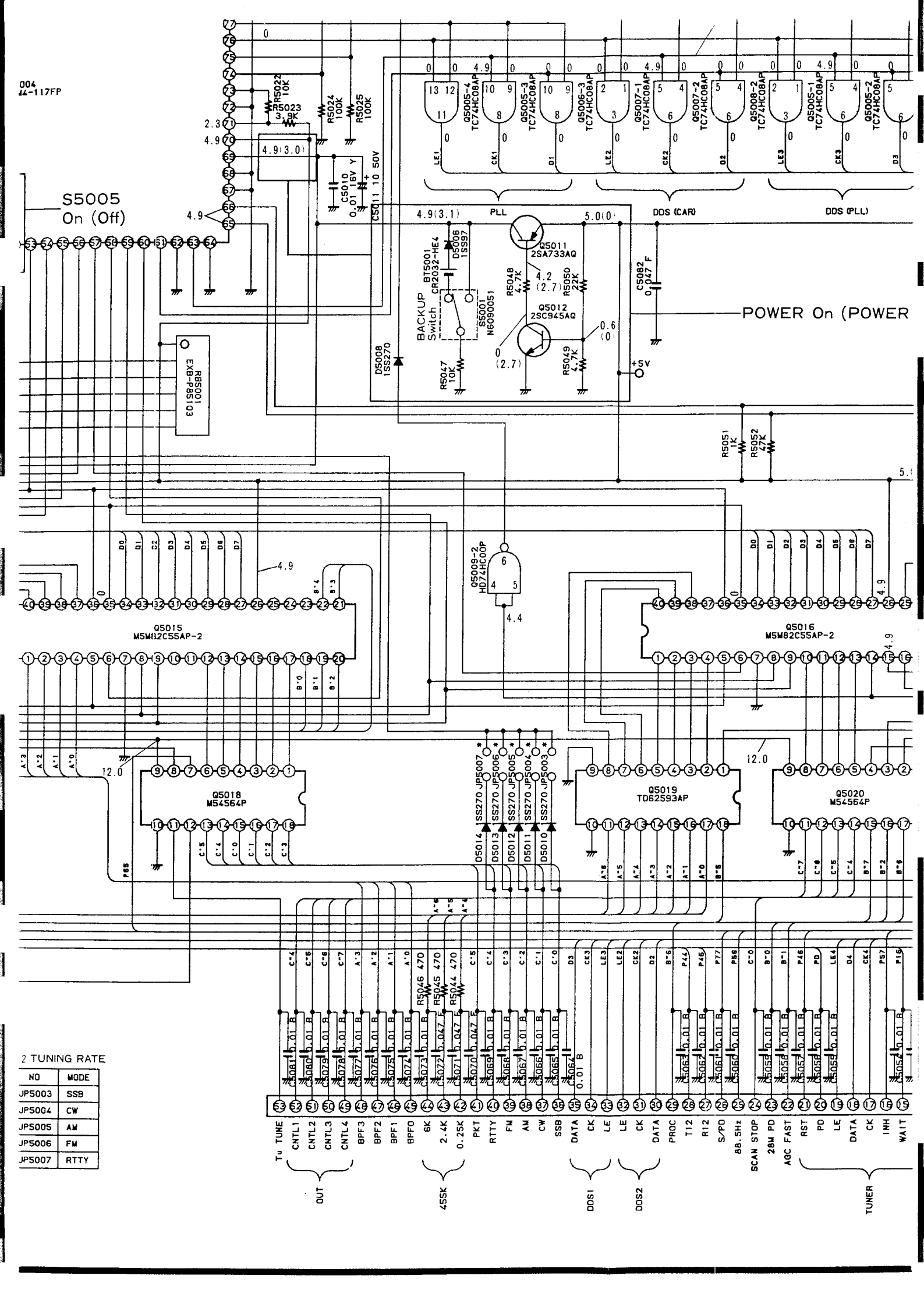
S5005
On (Off)
POWER On (POWER
PLL
DDS (CAR)
DDS (PLL)
BACKUP
Switch
Q5011
2SA733AQ
Q5012
2SC945AQ
Q5015
M5M82C55AP-2
Q5016
M5M82C55AP-2
Q5018
M54564P
Q5019
TD62593AP
Q5020
M54564P
Q5009-2
HD74HC00P
2 TUNING RATE
NO
MODE
JP5003
SSB
JP5004
CW
JP5005
AM
JP5006
FM
JP5007
RTTY
Tu TUNE
CNTL1
CNTL2
CNTL3
CNTL4
BPF3
BPF2
BPF1
BPF0
6K
2.4K
0.25K
PKT
RTTY
FM
AM
CW
SSB
DATA
CK
LE
LE
CK
DATA
PROC
T12
R12
S/PD
88.5Hz
SCAN STOP
28M PD
AGC FAST
RST
PD
LE
DATA
CK
INH
WAIT
OUT
455K
DDS1
DDS2
TUNER

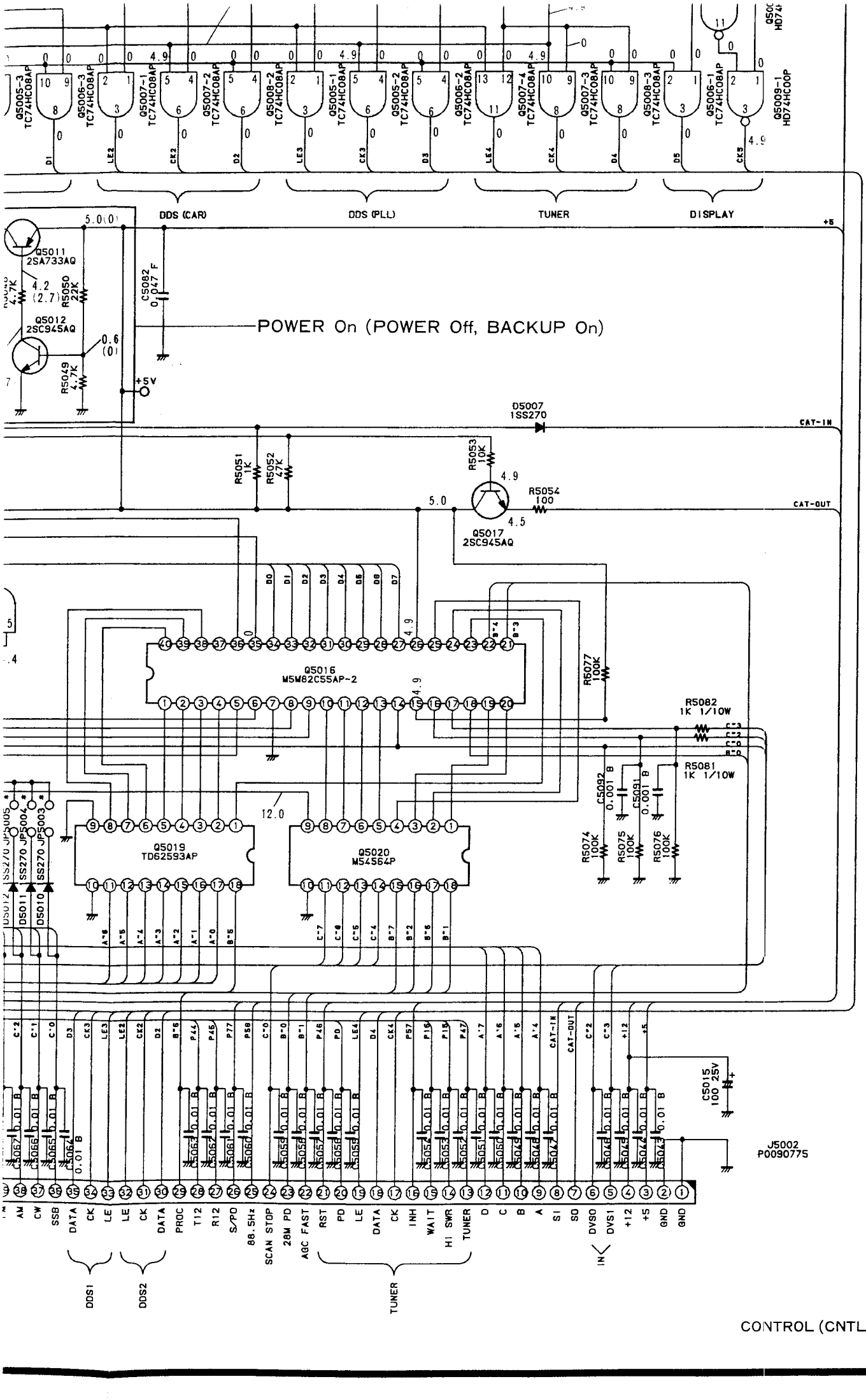

CONTROL (CNTL) UNIT

BT5001
R5029
R5028
Q5010

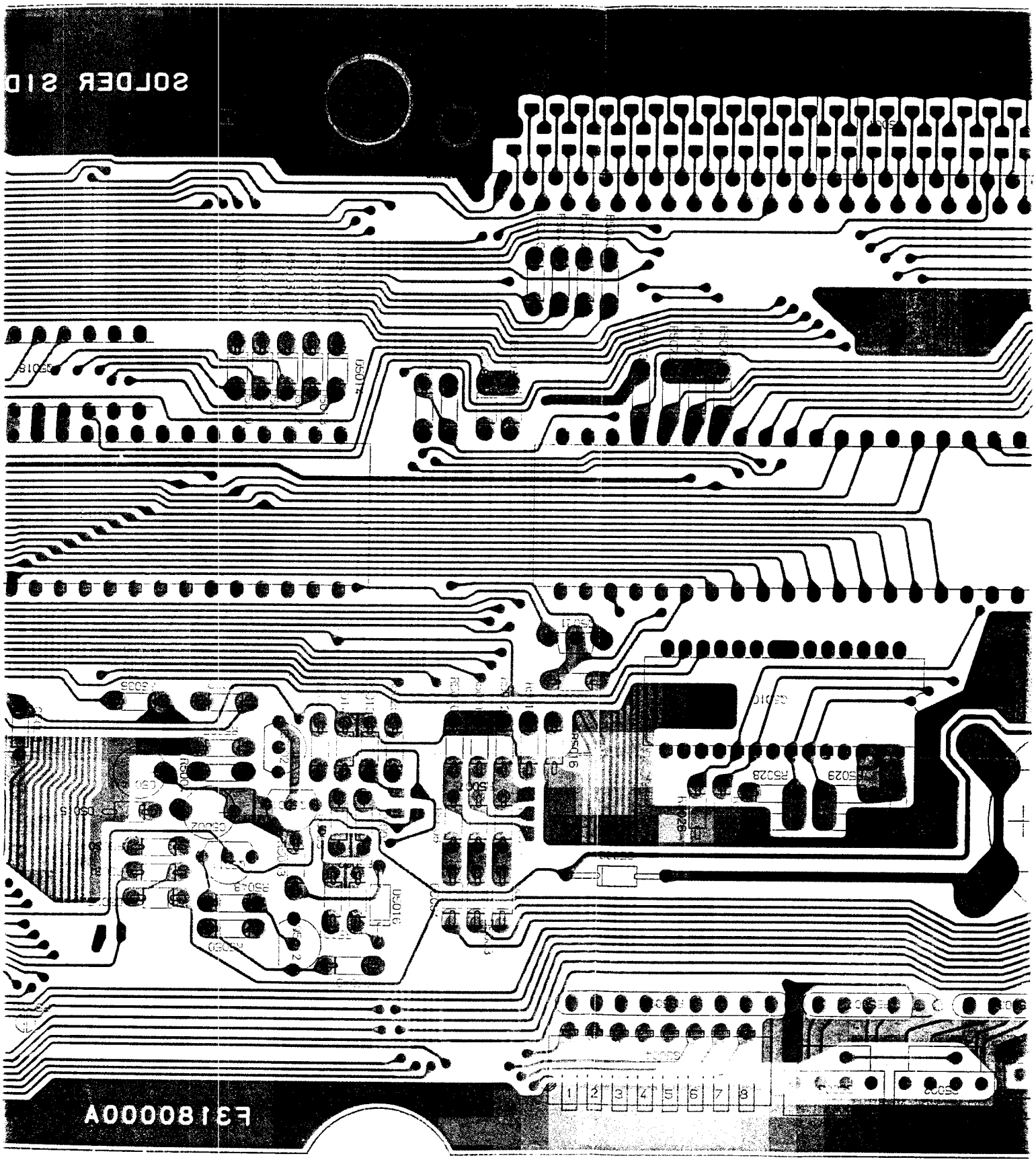
SOLDER SID
F31800000A

A00008137
SOLDER SIDE

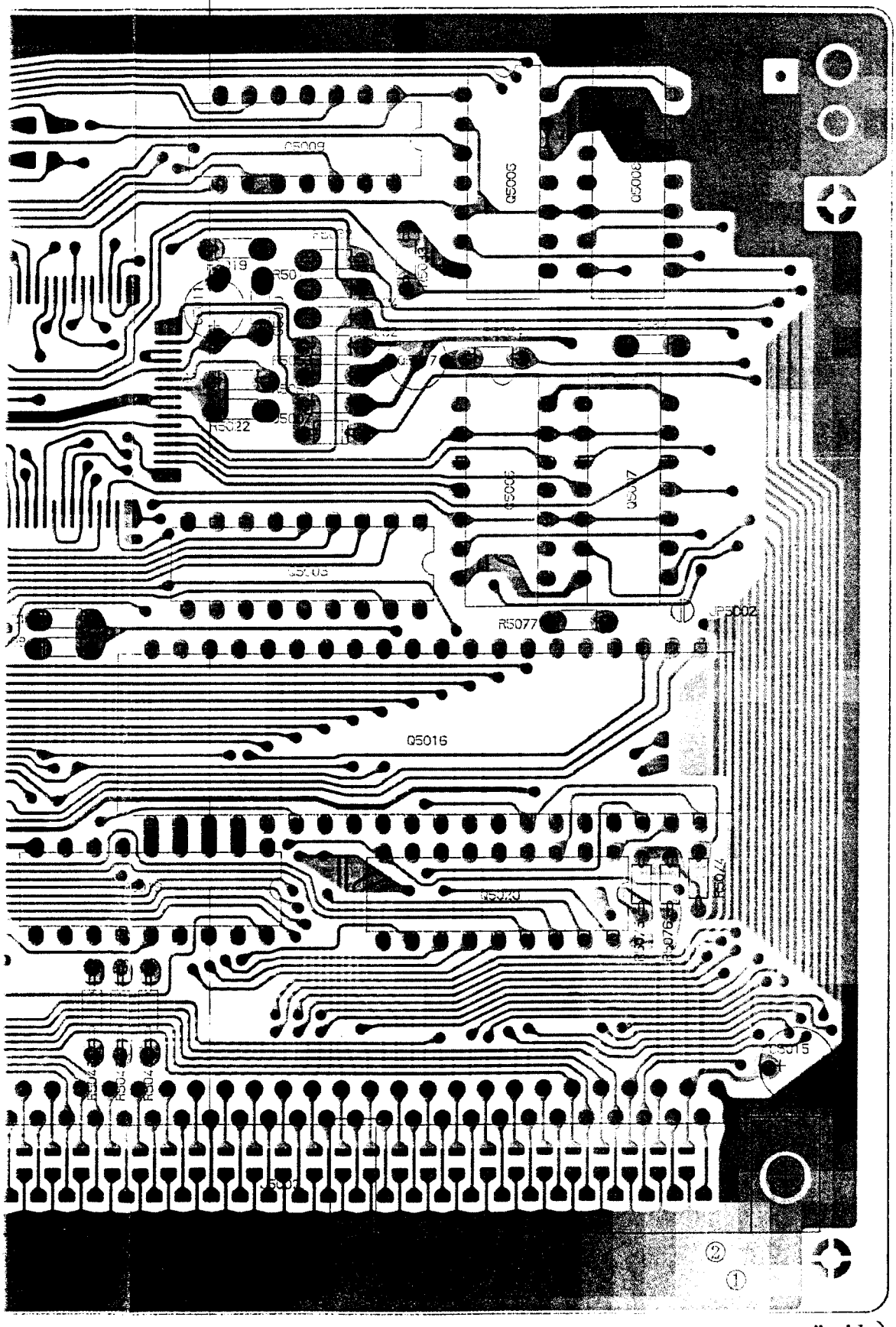

("component" side)

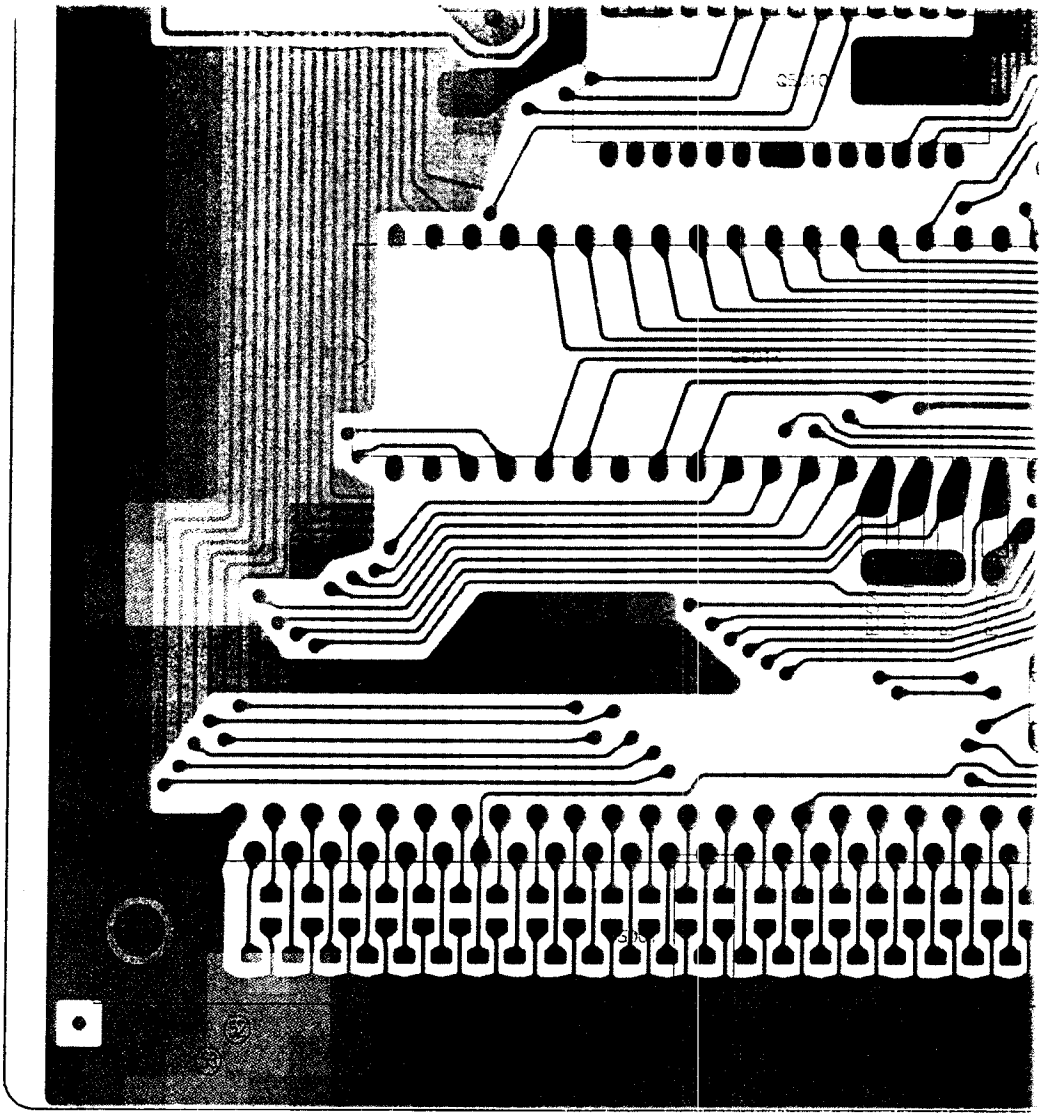

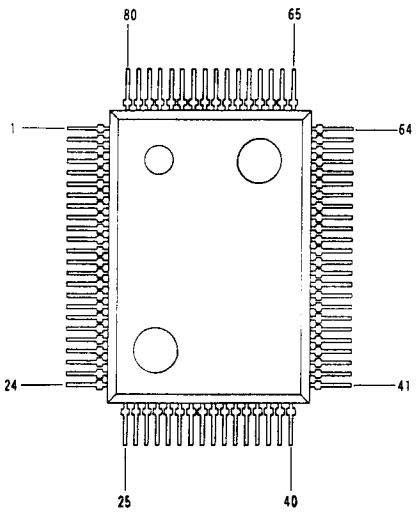

M37700M4
(Q5004)

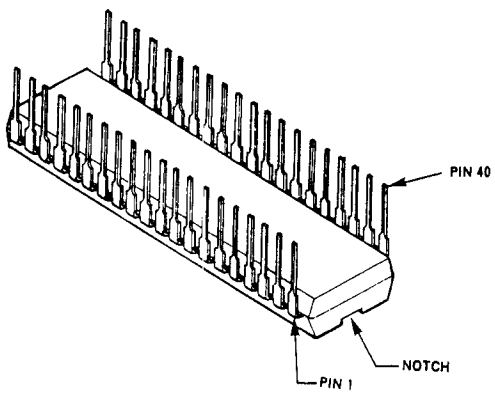

M5M82C55AP
(Q5014, 5015, 5016)

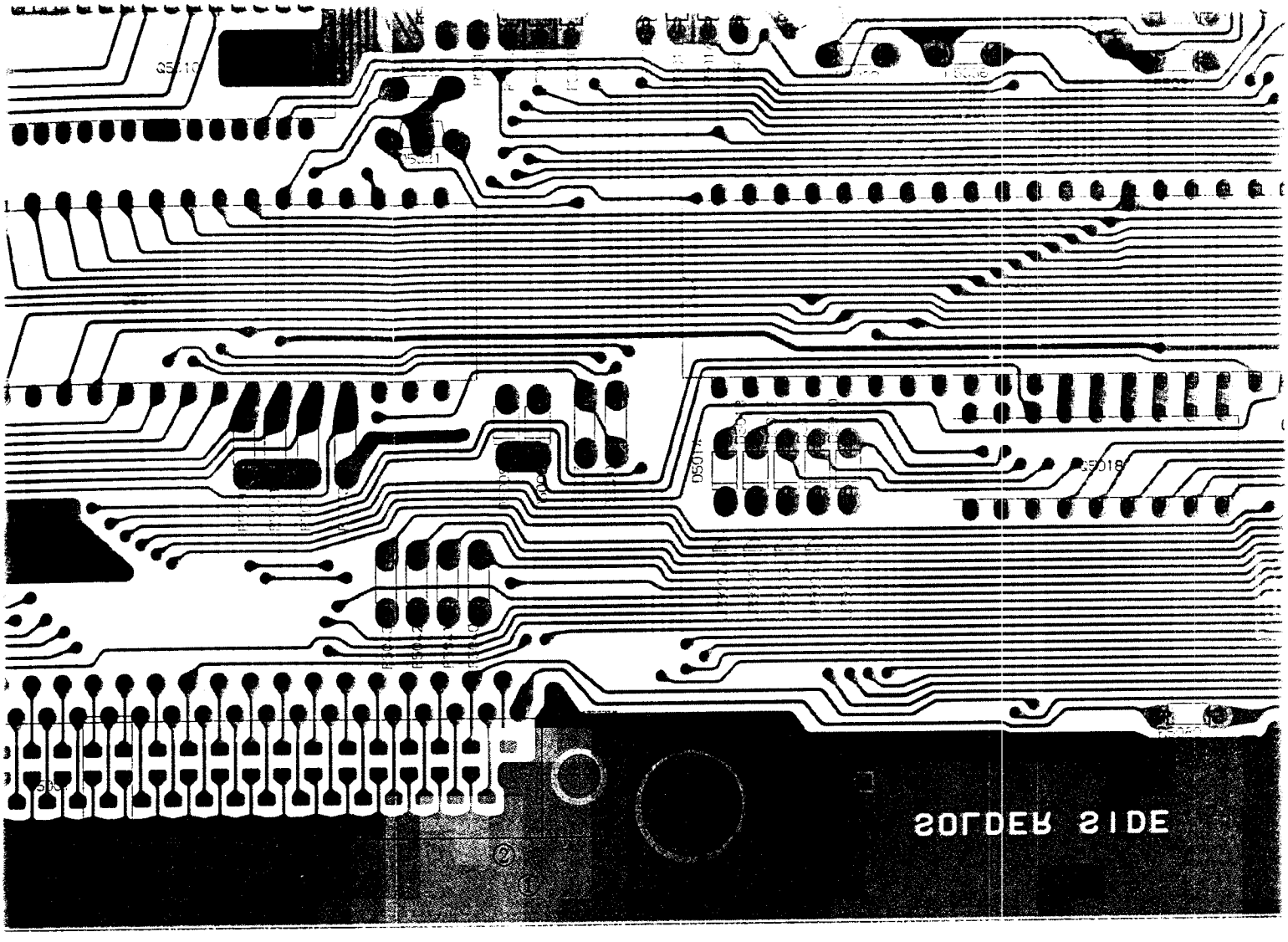

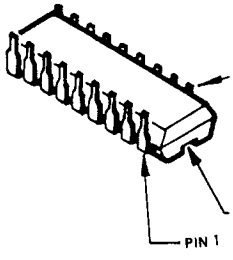

M54564P
(Q5003, 5018, 5020
TD62593AP
(Q5019)

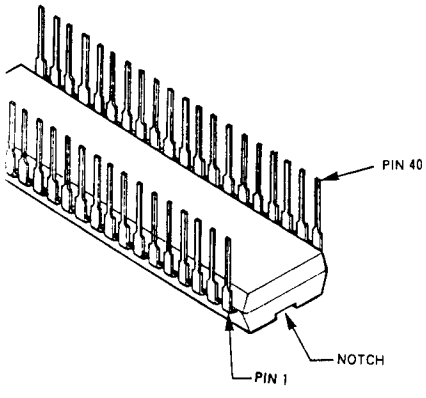

M5M82C55AP
(Q5014, 5015, 5016)

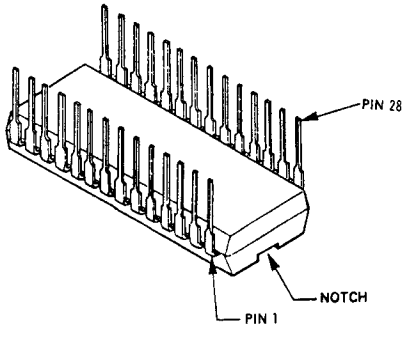

FQ7924
(Q5010)

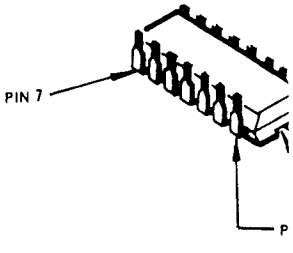

HD74HC00P
(Q5009)
TC74HC08AP
(Q5005, 5006, 5007,

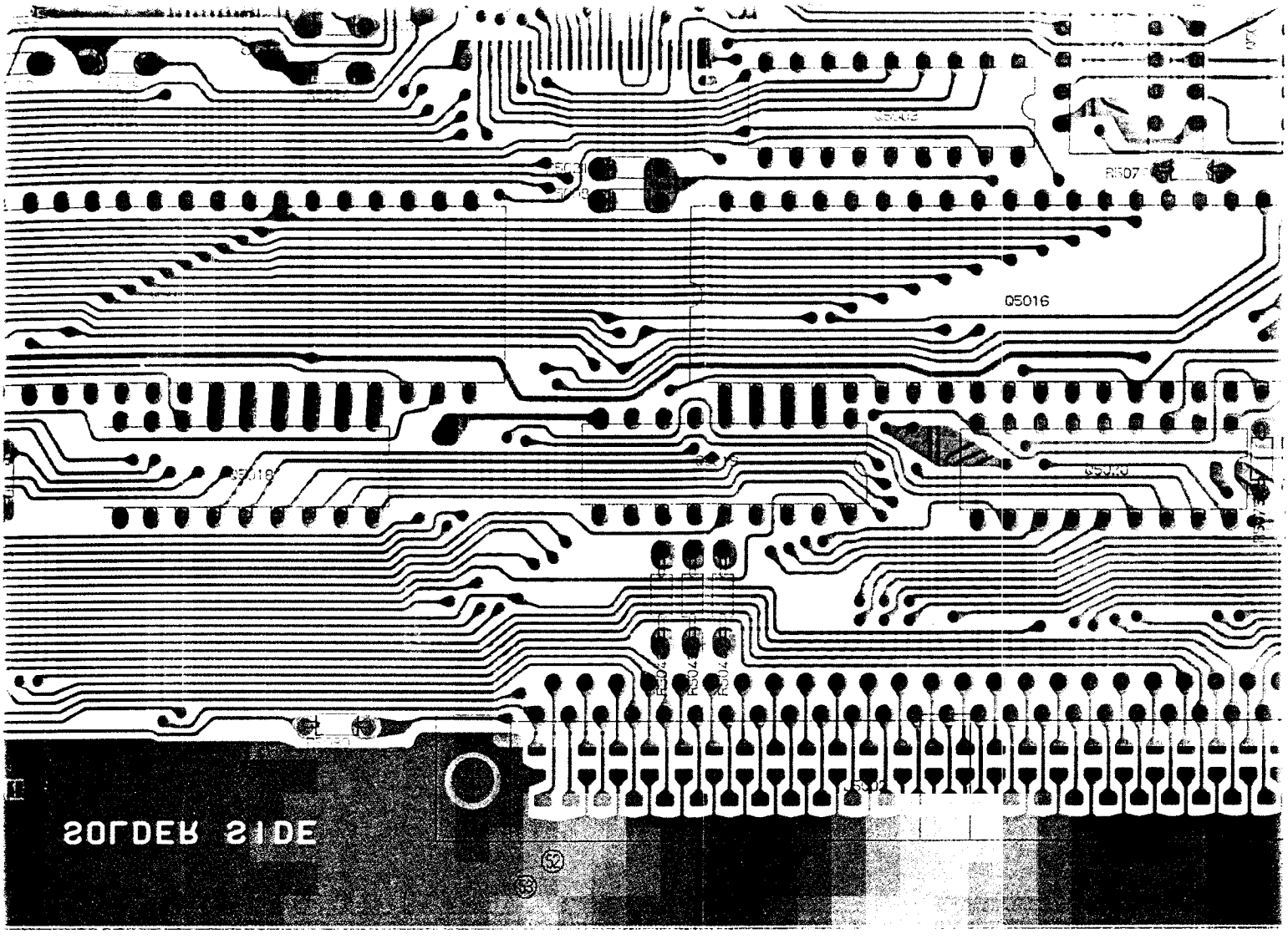

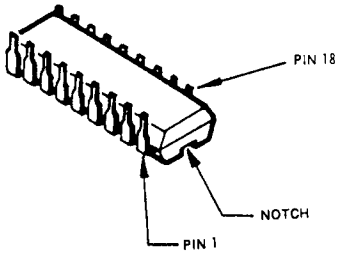

M54564P
(Q5003, 5018, 5020)
TD62593AP
(Q5019)

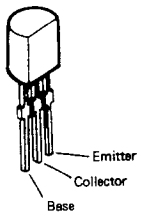

2SA733AQ
(Q5011)
2SC945AQ
(Q5002, 5012, 5017)

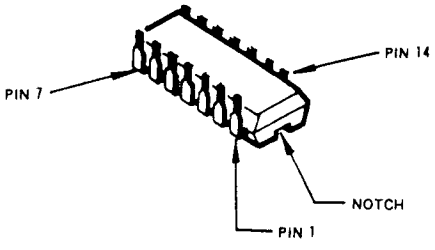

HD74HC00P
(Q5009)
TC74HC08AP
(Q5005, 5006, 5007, 5008)

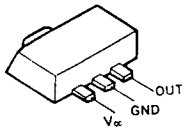

M51943BSL (A4)
(Q5001)

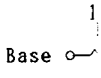

BA1A4P

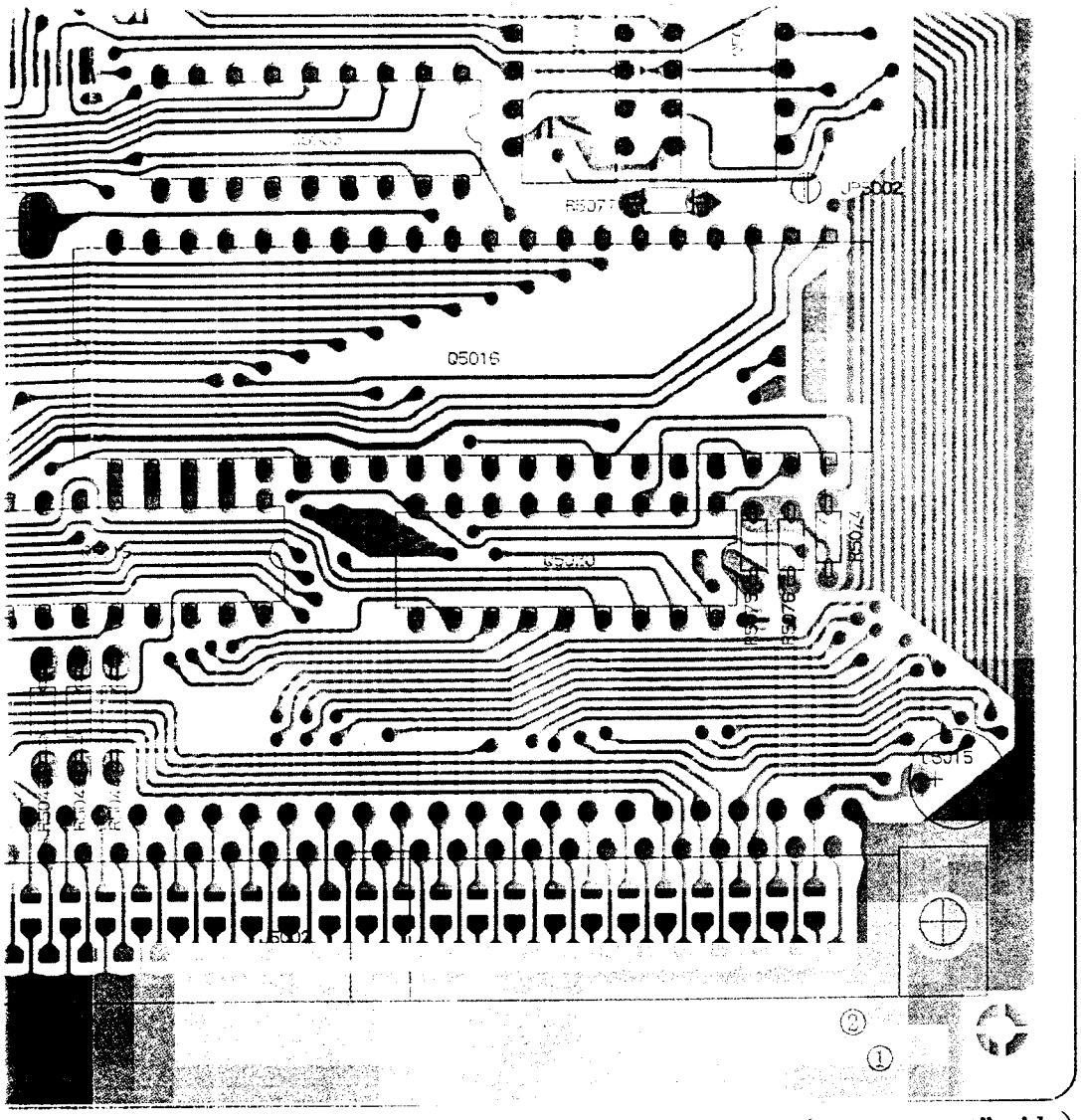

("component" side)

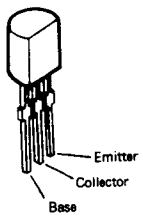

2SA733AQ
(Q5011)
2SC945AQ
(Q5002, 5012, 5017)

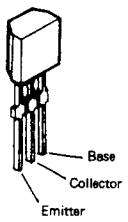

BA1A4P
(Q5021)

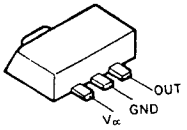

M51943BSL (A4)
(Q5001)

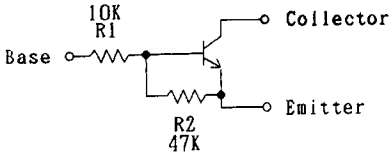

BA1A4P CIRCUIT DIAGRAM

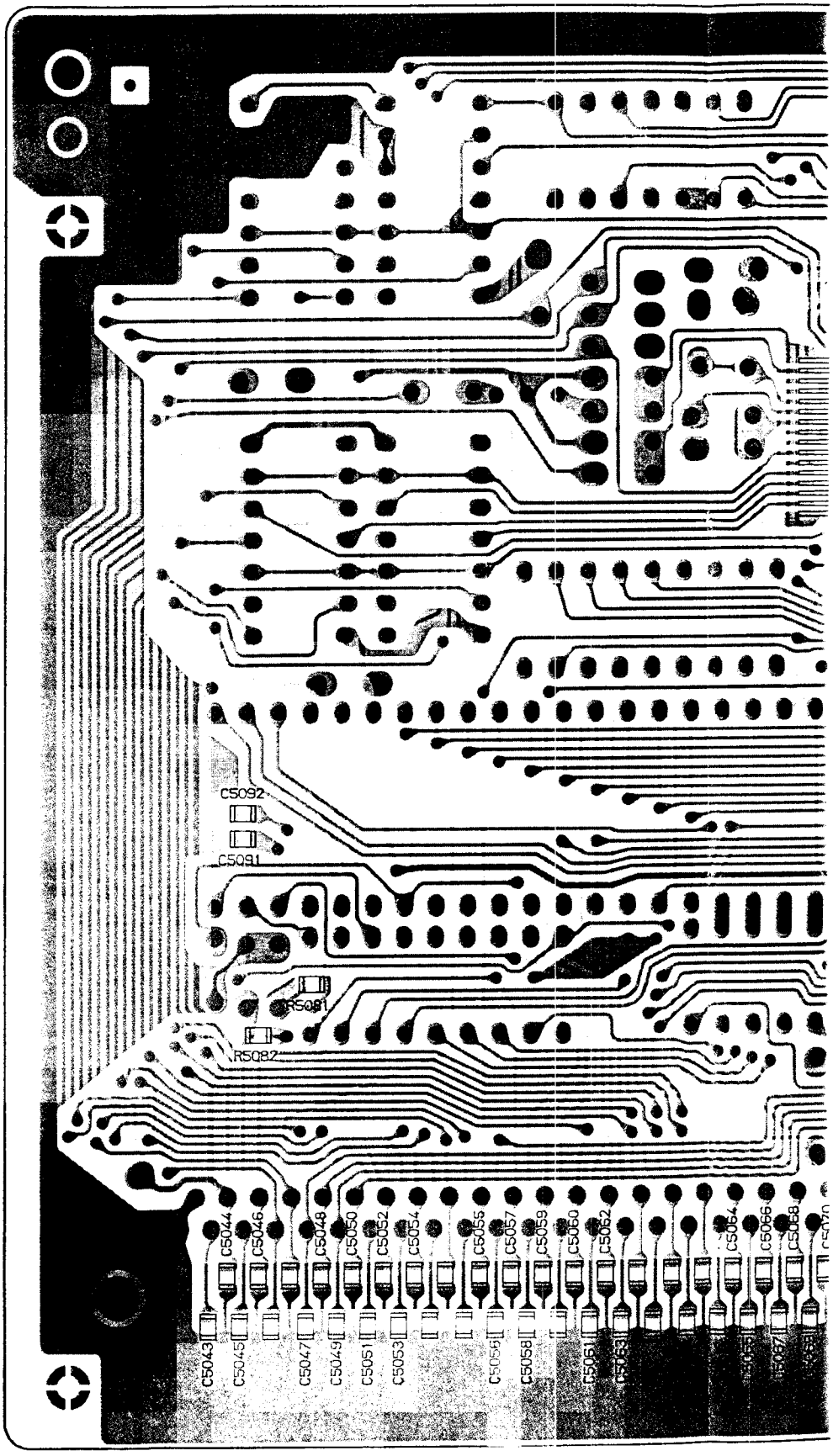
C5092
C5091
R5081
R5082
C5043
C5044
C5045
C5046
C5047
C5048
C5049
C5050
C5051
C5052
C5053
C5054
C5055
C5056
C5057
C5058
C5059
C5060
C5061
C5062
C5063
C5064
C5065
C5066
C5067
C5068

F3180000A
C5088
C5087
C5089
C5004
C5050
C5052
C5054
C5055
C5057
C5059
C5060
C5062
C5063
C5064
C5066
C5068
C5070
C5072
C5073
C5074
C5076
C5078
C5080
C5090
SOLDER SIDE

F318000A
C5089
C5084
C5085
C5086
R5079
R5078
C5093
C5090
SOLDER SIDE
C5017
C5018
C5019
C5020
C5021
C5022
C5023
C5024
C5025
C5026
C5027
C5029
C5030
C5031
C5032
C5033
C5034
C5035
C5036
C5037
C5038
C5039
C5040
C5042

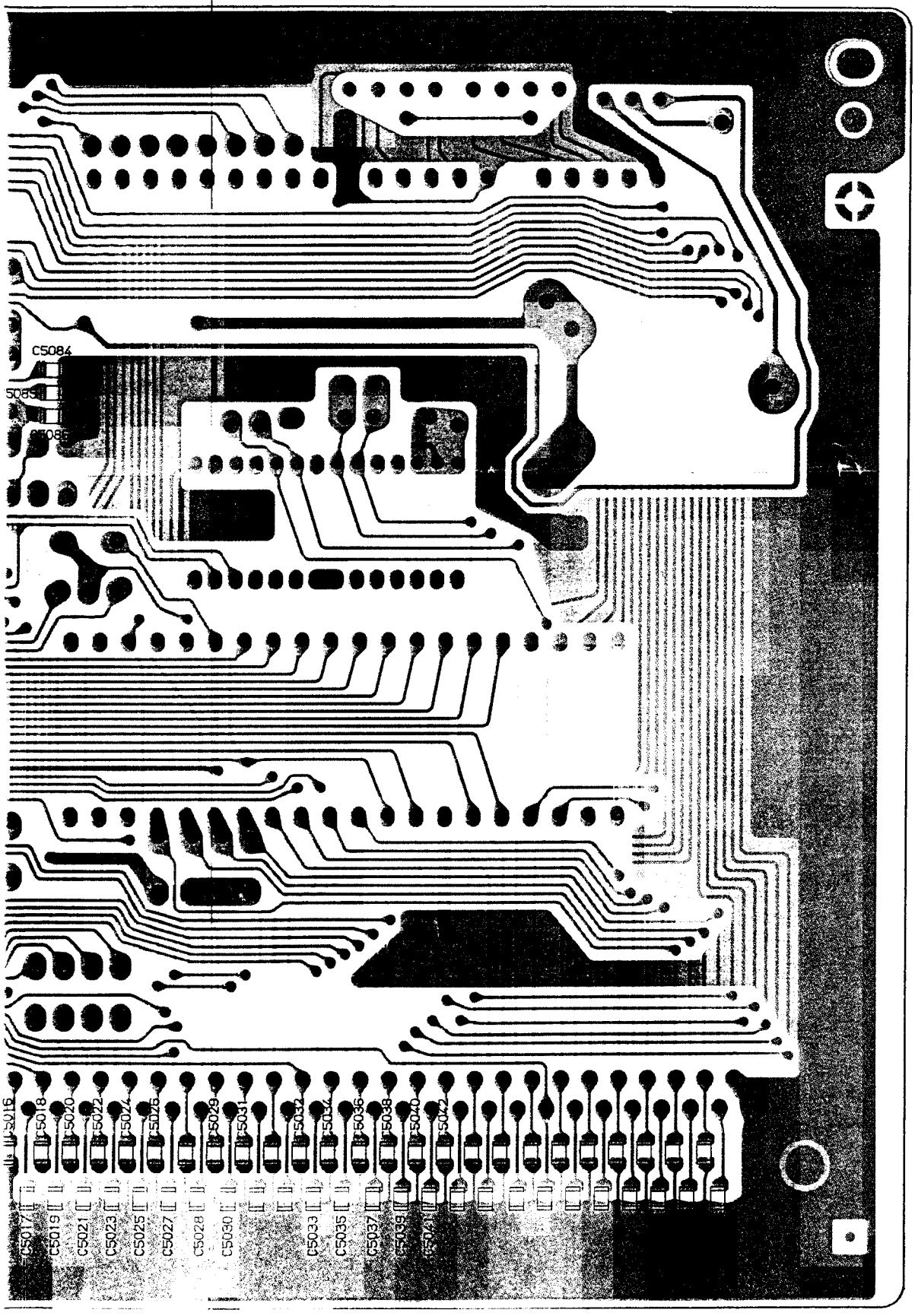

("chip-only" side)

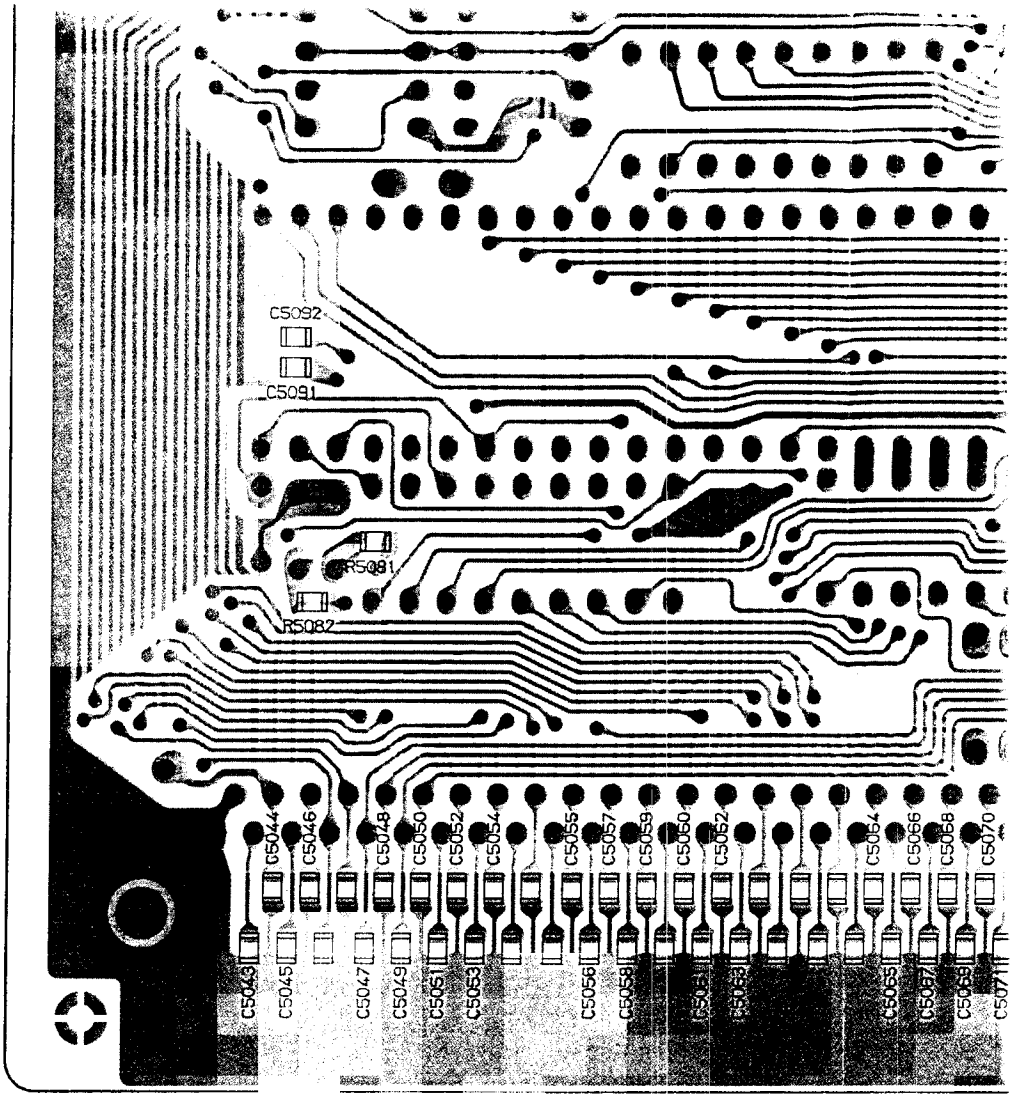
C5092
C5091
R5081
R5082
C5044
C5046
C5048
C5050
C5052
C5054
C5055
C5057
C5059
C5060
C5062
C5064
C5066
C5068
C5070
C5043
C5045
C5047
C5049
C5051
C5053
C5056
C5058
C5061
C5063
C5065
C5067
C5069
C5071

C5048
C5050
C5052
C5054
C5055
C5057
C5059
C5060
C5062
C5064
C5066
C5068
C5070
C5072
C5074
C5076
C5078
C5049
C5051
C5053
C5056
C5061
C5063
C5065
C5067
C5069
C5071
C5073
C5075
C5077
C5079
C5080
SOLDER SIDE

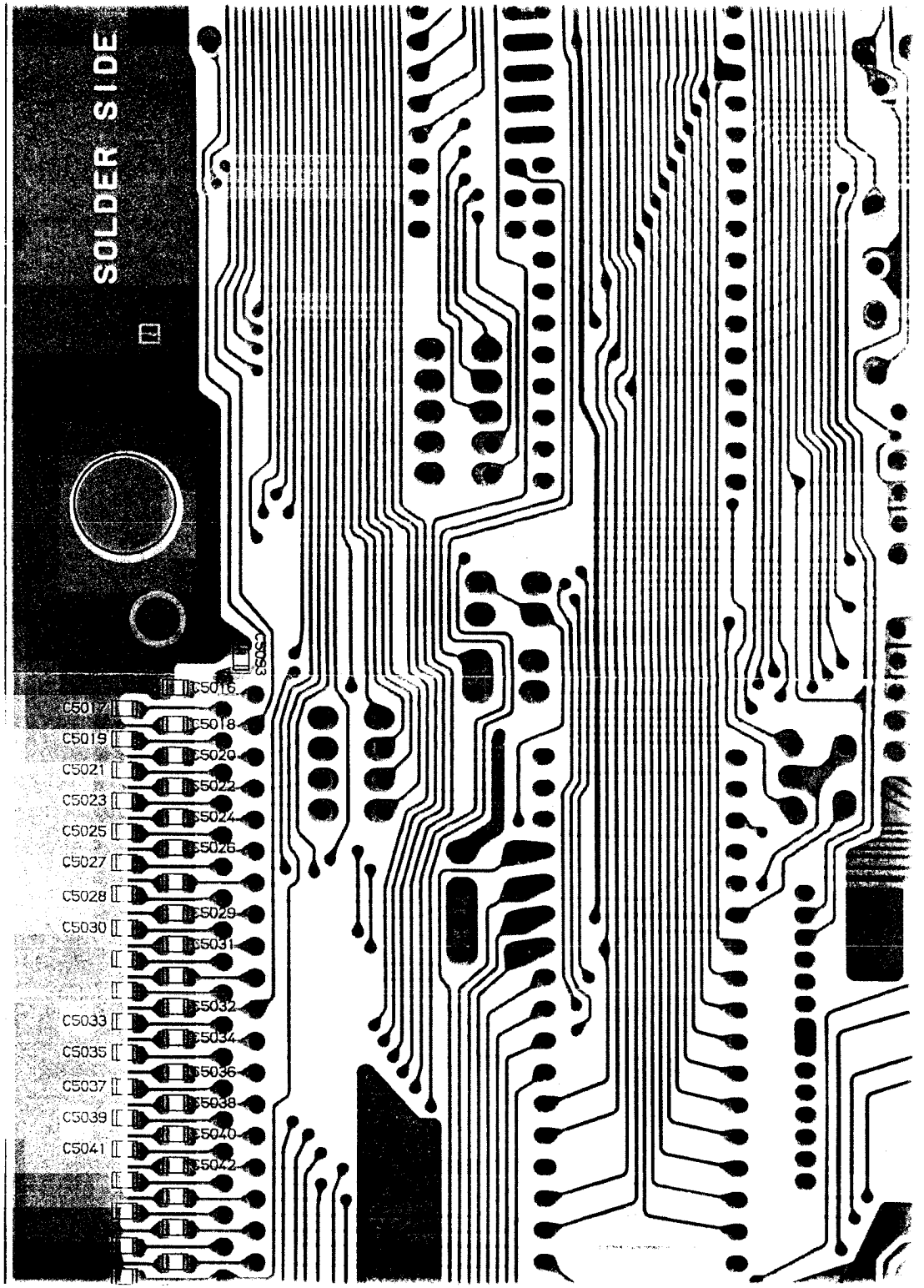
SOLDER SIDE
C5016
C5017
C5018
C5019
C5020
C5021
C5022
C5023
C5024
C5025
C5026
C5027
C5028
C5029
C5030
C5031
C5032
C5033
C5034
C5035
C5036
C5037
C5038
C5039
C5040
C5041
C5042

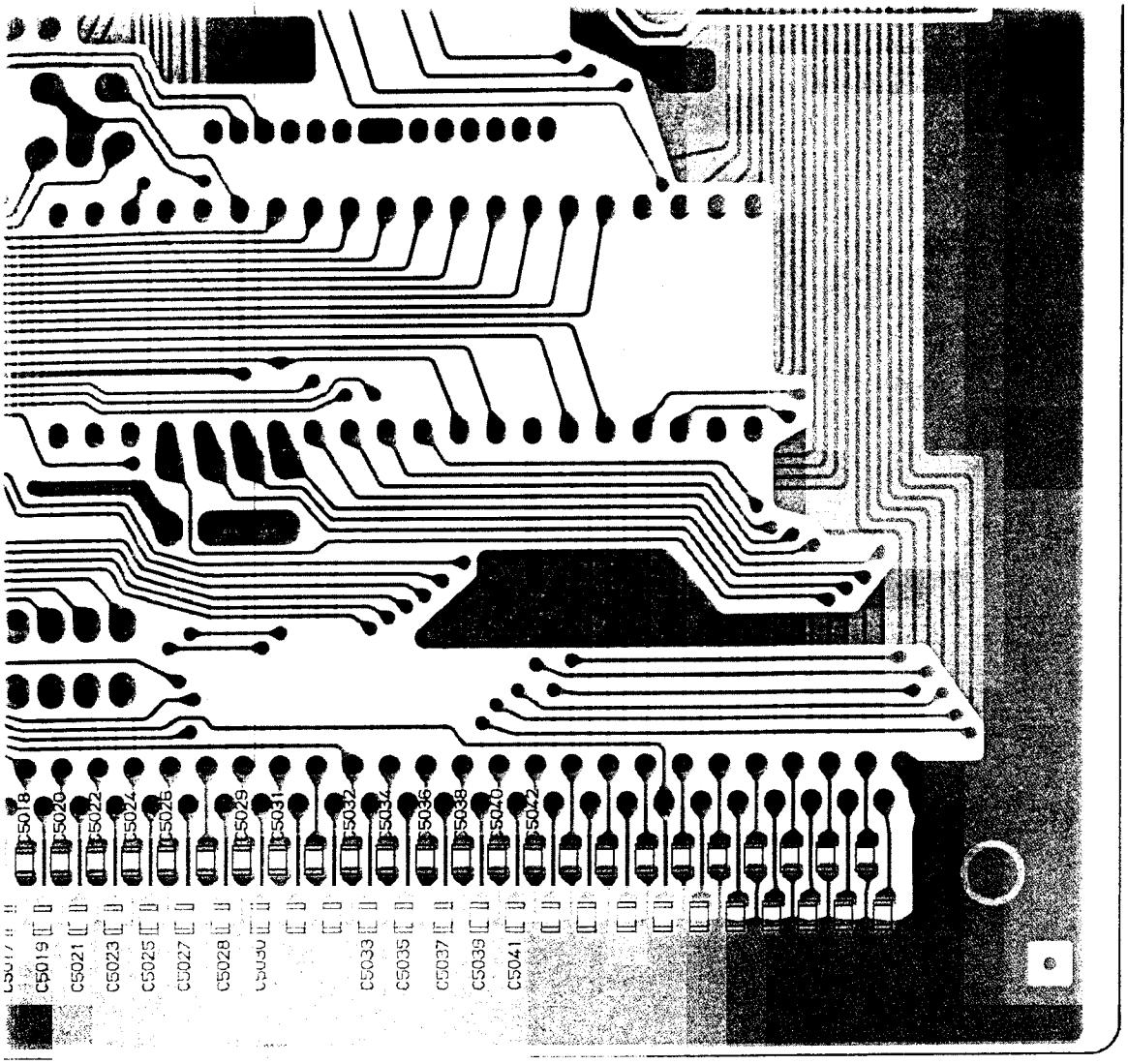

("chip-only" side)

REF.	YAESU P/N	DESCRIPTION	MFGR'S DESIG	VALUE	WV	TOL.	VERS.
		*** CNTL UNIT ***					
	CA0227003	P.C.B. W COMP.					DST EXP
	CA0227004	P.C.B. W COMP.					DST USA
	CA0227005	P.C.B. W COMP.					DST BEL
	CA0227006	P.C.B. W COMP.					DST FRA
	CA0227007	P.C.B. W COMP.					DST AUS
	F3180000A	P.C.B. W/O COMP.					
BT5001	Q9000398	LITHIUM BATTERY	CR2032-HE4				
C 5002	K46170016	AL. ELECTRO. CAP.	50VR47M5X11TR5	0.47uF	50V		
C 5003	K28129001	CERAMIC CAP.	EP050Y103N-A	0.01uF	16V	Y	
C 5004	K28129001	CERAMIC CAP.	EP050Y103N-A	0.01uF	16V	Y	
C 5005	K28179030	CERAMIC CAP.	UP050SL330J-A-B	33pF	50V	SL	
C 5006	K28179030	CERAMIC CAP.	UP050SL330J-A-B	33pF	50V	SL	
C 5007	K28129001	CERAMIC CAP.	EP050Y103N-A	0.01uF	16V	Y	
C 5008	K28179003	CERAMIC CAP.	UP050F104Z-A-B	0.1uF	50V	F	
C 5009	K28129001	CERAMIC CAP.	EP050Y103N-A	0.01uF	16V	Y	
C 5010	K28129001	CERAMIC CAP.	EP050Y103N-A	0.01uF	16V	Y	
C 5011	K46170021	AL. ELECTRO. CAP.	50V100M5X11TR5	10uF	50V		
C 5012	K28179002	CERAMIC CAP.	UP050F473Z-A-B	0.047uF	50V	F	
C 5013	K28179002	CERAMIC CAP.	UP050F473Z-A-B	0.047uF	50V	F	
C 5014	K46170014	AL. ELECTRO. CAP.	50VR22M5X11TR5	0.22uF	50V		
C 5015	K46140005	AL. ELECTRO. CAP.	25V101M6X11TR5	100uF	25V		
C 5016	K22170817	CHIP CAP.	GRM40B103M50PT	0.01uF	50V	B	
C 5017	K22170817	CHIP CAP.	GRM40B103M50PT	0.01uF	50V	B	
C 5018	K22170817	CHIP CAP.	GRM40B103M50PT	0.01uF	50V	B	
C 5019	K22170817	CHIP CAP.	GRM40B103M50PT	0.01uF	50V	B	
C 5020	K22171008	CHIP CAP.	GRM40F473Z50PT	0.047uF	50V	F	
C 5021	K22171008	CHIP CAP.	GRM40F473Z50PT	0.047uF	50V	F	
C 5022	K22171008	CHIP CAP.	GRM40F473Z50PT	0.047uF	50V	F	
C 5023	K22171008	CHIP CAP.	GRM40F473Z50PT	0.047uF	50V	F	
C 5024	K22170817	CHIP CAP.	GRM40B103M50PT	0.01uF	50V	B	
C 5025	K22170817	CHIP CAP.	GRM40B103M50PT	0.01uF	50V	B	
C 5026	K22170817	CHIP CAP.	GRM40B103M50PT	0.01uF	50V	B	
C 5027	K22170817	CHIP CAP.	GRM40B103M50PT	0.01uF	50V	B	
C 5028	K22170817	CHIP CAP.	GRM40B103M50PT	0.01uF	50V	B	
C 5029	K22170817	CHIP CAP.	GRM40B103M50PT	0.01uF	50V	B	
C 5030	K22170817	CHIP CAP.	GRM40B103M50PT	0.01uF	50V	B	
C 5031	K22170817	CHIP CAP.	GRM40B103M50PT	0.01uF	50V	B	
C 5032	K22170817	CHIP CAP.	GRM40B103M50PT	0.01uF	50V	B	
C 5033	K22170817	CHIP CAP.	GRM40B103M50PT	0.01uF	50V	B	
C 5034	K22170817	CHIP CAP.	GRM40B103M50PT	0.01uF	50V	B	
C 5035	K22170817	CHIP CAP.	GRM40B103M50PT	0.01uF	50V	B	
C 5036	K22170817	CHIP CAP.	GRM40B103M50PT	0.01uF	50V	B	
C 5037	K22170817	CHIP CAP.	GRM40B103M50PT	0.01uF	50V	B	
C 5038	K22170817	CHIP CAP.	GRM40B103M50PT	0.01uF	50V	B	
C 5039	K22170817	CHIP CAP.	GRM40B103M50PT	0.01uF	50V	B	
C 5040	K22170817	CHIP CAP.	GRM40B103M50PT	0.01uF	50V	B	
C 5041	K22170817	CHIP CAP.	GRM40B103M50PT	0.01uF	50V	B	
C 5042	K22170817	CHIP CAP.	GRM40B103M50PT	0.01uF	50V	B	
C 5043	K22170817	CHIP CAP.	GRM40B103M50PT	0.01uF	50V	B	
C 5044	K22170817	CHIP CAP.	GRM40B103M50PT	0.01uF	50V	B	

Control (CNTL) Unit

REF.	YAESU P/N	DESCRIPTION	MFGR'S DESIG	VALUE	WV	TOL.	VERS.
C 5045	K22170817	CHIP CAP.	GRM40B103M50PT	0.01uF	50V	B	
C 5046	K22170817	CHIP CAP.	GRM40B103M50PT	0.01uF	50V	B	
C 5047	K22170817	CHIP CAP.	GRM40B103M50PT	0.01uF	50V	B	
C 5048	K22170817	CHIP CAP.	GRM40B103M50PT	0.01uF	50V	B	
C 5049	K22170817	CHIP CAP.	GRM40B103M50PT	0.01uF	50V	B	
C 5050	K22170817	CHIP CAP.	GRM40B103M50PT	0.01uF	50V	B	
C 5051	K22170817	CHIP CAP.	GRM40B103M50PT	0.01uF	50V	B	
C 5052	K22170817	CHIP CAP.	GRM40B103M50PT	0.01uF	50V	B	
C 5053	K22170817	CHIP CAP.	GRM40B103M50PT	0.01uF	50V	B	
C 5054	K22170817	CHIP CAP.	GRM40B103M50PT	0.01uF	50V	B	
C 5055	K22170817	CHIP CAP.	GRM40B103M50PT	0.01uF	50V	B	
C 5056	K22170817	CHIP CAP.	GRM40B103M50PT	0.01uF	50V	B	
C 5057	K22170817	CHIP CAP.	GRM40B103M50PT	0.01uF	50V	B	
C 5058	K22170817	CHIP CAP.	GRM40B103M50PT	0.01uF	50V	B	
C 5059	K22170817	CHIP CAP.	GRM40B103M50PT	0.01uF	50V	B	
C 5060	K22170817	CHIP CAP.	GRM40B103M50PT	0.01uF	50V	B	
C 5061	K22170817	CHIP CAP.	GRM40B103M50PT	0.01uF	50V	B	
C 5062	K22170817	CHIP CAP.	GRM40B103M50PT	0.01uF	50V	B	
C 5063	K22170817	CHIP CAP.	GRM40B103M50PT	0.01uF	50V	B	
C 5064	K22170817	CHIP CAP.	GRM40B103M50PT	0.01uF	50V	B	
C 5065	K22170817	CHIP CAP.	GRM40B103M50PT	0.01uF	50V	B	
C 5066	K22170817	CHIP CAP.	GRM40B103M50PT	0.01uF	50V	B	
C 5067	K22170817	CHIP CAP.	GRM40B103M50PT	0.01uF	50V	B	
C 5068	K22170817	CHIP CAP.	GRM40B103M50PT	0.01uF	50V	B	
C 5069	K22170817	CHIP CAP.	GRM40B103M50PT	0.01uF	50V	B	
C 5070	K22171008	CHIP CAP.	GRM40F473Z50PT	0.047uF	50V	F	
C 5071	K22171008	CHIP CAP.	GRM40F473Z50PT	0.047uF	50V	F	
C 5072	K22171008	CHIP CAP.	GRM40F473Z50PT	0.047uF	50V	F	
C 5073	K22170817	CHIP CAP.	GRM40B103M50PT	0.01uF	50V	B	
C 5074	K22170817	CHIP CAP.	GRM40B103M50PT	0.01uF	50V	B	
C 5075	K22170817	CHIP CAP.	GRM40B103M50PT	0.01uF	50V	B	
C 5076	K22170817	CHIP CAP.	GRM40B103M50PT	0.01uF	50V	B	
C 5077	K22170817	CHIP CAP.	GRM40B103M50PT	0.01uF	50V	B	
C 5078	K22170817	CHIP CAP.	GRM40B103M50PT	0.01uF	50V	B	
C 5079	K22170817	CHIP CAP.	GRM40B103M50PT	0.01uF	50V	B	
C 5080	K22170817	CHIP CAP.	GRM40B103M50PT	0.01uF	50V	B	
C 5081	K22170817	CHIP CAP.	GRM40B103M50PT	0.01uF	50V	B	
C 5082	K28179002	CERAMIC CAP.	UP050F473Z-A-B	0.047uF	50V	F	
C 5083	K28179002	CERAMIC CAP.	UP050F473Z-A-B	0.047uF	50V	F	
C 5084	K22170805	CHIP CAP.	GRM40B102M50PT	0.001uF	50V	B	
C 5085	K22170805	CHIP CAP.	GRM40B102M50PT	0.001uF	50V	B	
C 5086	K22170805	CHIP CAP.	GRM40B102M50PT	0.001uF	50V	B	
C 5087	K22170805	CHIP CAP.	GRM40B102M50PT	0.001uF	50V	B	
C 5088	K22170805	CHIP CAP.	GRM40B102M50PT	0.001uF	50V	B	
C 5089	K22170805	CHIP CAP.	GRM40B102M50PT	0.001uF	50V	B	
C 5090	K22170805	CHIP CAP.	GRM40B102M50PT	0.001uF	50V	B	
C 5091	K22170805	CHIP CAP.	GRM40B102M50PT	0.001uF	50V	B	
C 5092	K22170805	CHIP CAP.	GRM40B102M50PT	0.001uF	50V	B	
C 5093	K22170817	CHIP CAP.	GRM40B103M50PT	0.01uF	50V	B	
CO5001	H7900580	CERAMIC OSC	CSA8.00MT				
D 5002	G2060004	DIODE	1SS270TJ				
D 5003	G2060004	DIODE	1SS270TJ				
D 5004	G2060004	DIODE	1SS270TJ				

REF.	YAESU P/N	DESCRIPTION	MFGR'S DESIG	VALUE	WV	TOL.	VERS.
D 5005	G2060004	DIODE	1SS270TJ				
D 5006	G2090118	DIODE	1SS97				
D 5007	G2060004	DIODE	1SS270TJ				
D 5008	G2060004	DIODE	1SS270TJ				
D 5009	G2060004	DIODE	1SS270TJ				
D 5010	G2060004	DIODE	1SS270TJ				
D 5011	G2060004	DIODE	1SS270TJ				
D 5012	G2060004	DIODE	1SS270TJ				
D 5013	G2060004	DIODE	1SS270TJ				
D 5014	G2060004	DIODE	1SS270TJ				
D 5015	G2060004	DIODE	1SS270TJ				
D 5016	G2090201	DIODE	RD3.3EB2				
J 5001	P0090775	CONNECTOR	PCN5D-53PT-1.27DS				
J 5002	P0090775	CONNECTOR	PCN5D-53PT-1.27DS				
Q 5001	G1090840	IC	M51943BSL				
Q 5002	G3309451Q	TRANSISTOR	2SC945AQ				
Q 5003	G1090836	IC	M54564P				
Q 5004	G1091180	IC	M37700M4-117FP				
Q 5005	G1091120	IC	TC74HC08AP				
Q 5006	G1091120	IC	TC74HC08AP				
Q 5007	G1091120	IC	TC74HC08AP				
Q 5008	G1091120	IC	TC74HC08AP				
Q 5009	G1091007	IC	HD74HC00P				
Q 5010	G1091080	IC	FQ7924				
Q 5011	G3107331Q	TRANSISTOR	2SA733AQ				
Q 5012	G3309451Q	TRANSISTOR	2SC945AQ				
Q 5014	G1091121	IC	M5M82C55AP-2				
Q 5015	G1091121	IC	M5M82C55AP-2				
Q 5016	G1091121	IC	M5M82C55AP-2				
Q 5017	G3309451Q	TRANSISTOR	2SC945AQ				
Q 5018	G1090836	IC	M54564P				
Q 5019	G1091119	IC	TD62593AP				
Q 5020	G1090836	IC	M54564P				
Q 5021	G3050003	TRANSISTOR	BA1A4P-T				
R 5001	J07225222	CARBON FILM RES.	RD16TPJ222	2.2K	1/6W		
R 5002	J07225102	CARBON FILM RES.	RD16TPJ102	1K	1/6W		
R 5004	J07225103	CARBON FILM RES.	RD16TPJ103	10K	1/6W		
R 5005	J07225473	CARBON FILM RES.	RD16TPJ473	47K	1/6W		
R 5006	J07225102	CARBON FILM RES.	RD16TPJ102	1K	1/6W		
R 5007	J07225102	CARBON FILM RES.	RD16TPJ102	1K	1/6W		
R 5008	J07225102	CARBON FILM RES.	RD16TPJ102	1K	1/6W		
R 5009	J07225103	CARBON FILM RES.	RD16TPJ103	10K	1/6W		
R 5010	J07225104	CARBON FILM RES.	RD16TPJ104	100K	1/6W		
R 5011	J07225104	CARBON FILM RES.	RD16TPJ104	100K	1/6W		
R 5012	J07225104	CARBON FILM RES.	RD16TPJ104	100K	1/6W		
R 5013	J07225103	CARBON FILM RES.	RD16TPJ103	10K	1/6W		
R 5014	J07225103	CARBON FILM RES.	RD16TPJ103	10K	1/6W		
R 5015	J07225105	CARBON FILM RES.	RD16TPJ105	1M	1/6W		
R 5016	J07225104	CARBON FILM RES.	RD16TPJ104	100K	1/6W		
R 5017	J07225104	CARBON FILM RES.	RD16TPJ104	100K	1/6W		
R 5018	J07225104	CARBON FILM RES.	RD16TPJ104	100K	1/6W		
R 5019	J07225104	CARBON FILM RES.	RD16TPJ104	100K	1/6W		

Control (CNTL) Unit

REF.	YAESU P/N	DESCRIPTION	MFGR'S DESIG	VALUE	WV	TOL.	VERS.
R 5020	J07225103	CARBON FILM RES.	RD16TPJ103	10K	1/6W		
R 5021	J07225123	CARBON FILM RES.	RD16TPJ123	12K	1/6W		
R 5022	J07225103	CARBON FILM RES.	RD16TPJ103	10K	1/6W		
R 5023	J07225392	CARBON FILM RES.	RD16TPJ392	3.9K	1/6W		
R 5024	J07225104	CARBON FILM RES.	RD16TPJ104	100K	1/6W		
R 5025	J07225104	CARBON FILM RES.	RD16TPJ104	100K	1/6W		
R 5026	J07225104	CARBON FILM RES.	RD16TPJ104	100K	1/6W		
R 5027	J07225104	CARBON FILM RES.	RD16TPJ104	100K	1/6W		
R 5028	J07225472	CARBON FILM RES.	RD16TPJ472	4.7K	1/6W		
R 5029	J07225472	CARBON FILM RES.	RD16TPJ472	4.7K	1/6W		
R 5030	J07225104	CARBON FILM RES.	RD16TPJ104	100K	1/6W		
R 5031	J07225102	CARBON FILM RES.	RD16TPJ102	1K	1/6W		
R 5032	J07225104	CARBON FILM RES.	RD16TPJ104	100K	1/6W		
R 5033	J07225104	CARBON FILM RES.	RD16TPJ104	100K	1/6W		
R 5034	J07225104	CARBON FILM RES.	RD16TPJ104	100K	1/6W		
R 5035	J07225103	CARBON FILM RES.	RD16TPJ103	10K	1/6W		
R 5036	J07225104	CARBON FILM RES.	RD16TPJ104	100K	1/6W		
R 5040	J07225221	CARBON FILM RES.	RD16TPJ221	220	1/6W		
R 5041	J07225221	CARBON FILM RES.	RD16TPJ221	220	1/6W		
R 5042	J07225221	CARBON FILM RES.	RD16TPJ221	220	1/6W		
R 5043	J07225221	CARBON FILM RES.	RD16TPJ221	220	1/6W		
R 5044	J07225471	CARBON FILM RES.	RD16TPJ471	470	1/6W		
R 5045	J07225471	CARBON FILM RES.	RD16TPJ471	470	1/6W		
R 5046	J07225471	CARBON FILM RES.	RD16TPJ471	470	1/6W		
R 5047	J07225103	CARBON FILM RES.	RD16TPJ103	10K	1/6W		
R 5048	J07225472	CARBON FILM RES.	RD16TPJ472	4.7K	1/6W		
R 5049	J07225472	CARBON FILM RES.	RD16TPJ472	4.7K	1/6W		
R 5050	J07225223	CARBON FILM RES.	RD16TPJ223	22K	1/6W		
R 5051	J07225102	CARBON FILM RES.	RD16TPJ102	1K	1/6W		
R 5052	J07225473	CARBON FILM RES.	RD16TPJ473	47K	1/6W		
R 5053	J07225103	CARBON FILM RES.	RD16TPJ103	10K	1/6W		
R 5054	J07225101	CARBON FILM RES.	RD16TPJ101	100	1/6W		
R 5070	J07225104	CARBON FILM RES.	RD16TPJ104	100K	1/6W		
R 5071	J07225104	CARBON FILM RES.	RD16TPJ104	100K	1/6W		
R 5072	J07225104	CARBON FILM RES.	RD16TPJ104	100K	1/6W		
R 5073	J07225104	CARBON FILM RES.	RD16TPJ104	100K	1/6W		
R 5074	J07225104	CARBON FILM RES.	RD16TPJ104	100K	1/6W		
R 5075	J07225104	CARBON FILM RES.	RD16TPJ104	100K	1/6W		
R 5076	J07225104	CARBON FILM RES.	RD16TPJ104	100K	1/6W		
R 5077	J07225104	CARBON FILM RES.	RD16TPJ104	100K	1/6W		
R 5078	J24205102	CHIP RES.	RMC1/10T 102J	1K	1/10W		
R 5079	J24205102	CHIP RES.	RMC1/10T 102J	1K	1/10W		
R 5080	J07225102	CARBON FILM RES.	RD16TPJ102	1K	1/6W		
R 5081	J24205102	CHIP RES.	RMC1/10T 102J	1K	1/10W		
R 5082	J24205102	CHIP RES.	RMC1/10T 102J	1K	1/10W		
R 5083	J07225472	CARBON FILM RES.	RD16TPJ472	4.7K	1/6W		
R 5084	J07225472	CARBON FILM RES.	RD16TPJ472	4.7K	1/6W		
RB5001	J40900036	BLOCK RES.	EXB-P85103	EXB-P85103			
RB5002	J40900164	BLOCK RES.	EXB-P84103K	EXB-P84103			
RB5003	J40900164	BLOCK RES.	EXB-P84103K	EXB-P84103			
RB5004	J40900035	BLOCK RES.	EXB-P88103	EXB-P88103			
S 5001	N6090051	SLIDE SWITCH	SSS212299				
S 5002	N0190157	ROTARY SWITCH	DRR3016				

REF.	YAESU P/N	DESCRIPTION	MFGR'S DESIG	VALUE	WV	TOL.	VERS.
S 5003	N0190157	ROTARY SWITCH	DRR3016				
S 5004	N7090102	DIP SWITCH	DPS708				
S 5005	N7090104	DIP SWITCH	DPS704				
	R0136960	FITTING R					
	R0136970	FITTING L					

Notes:

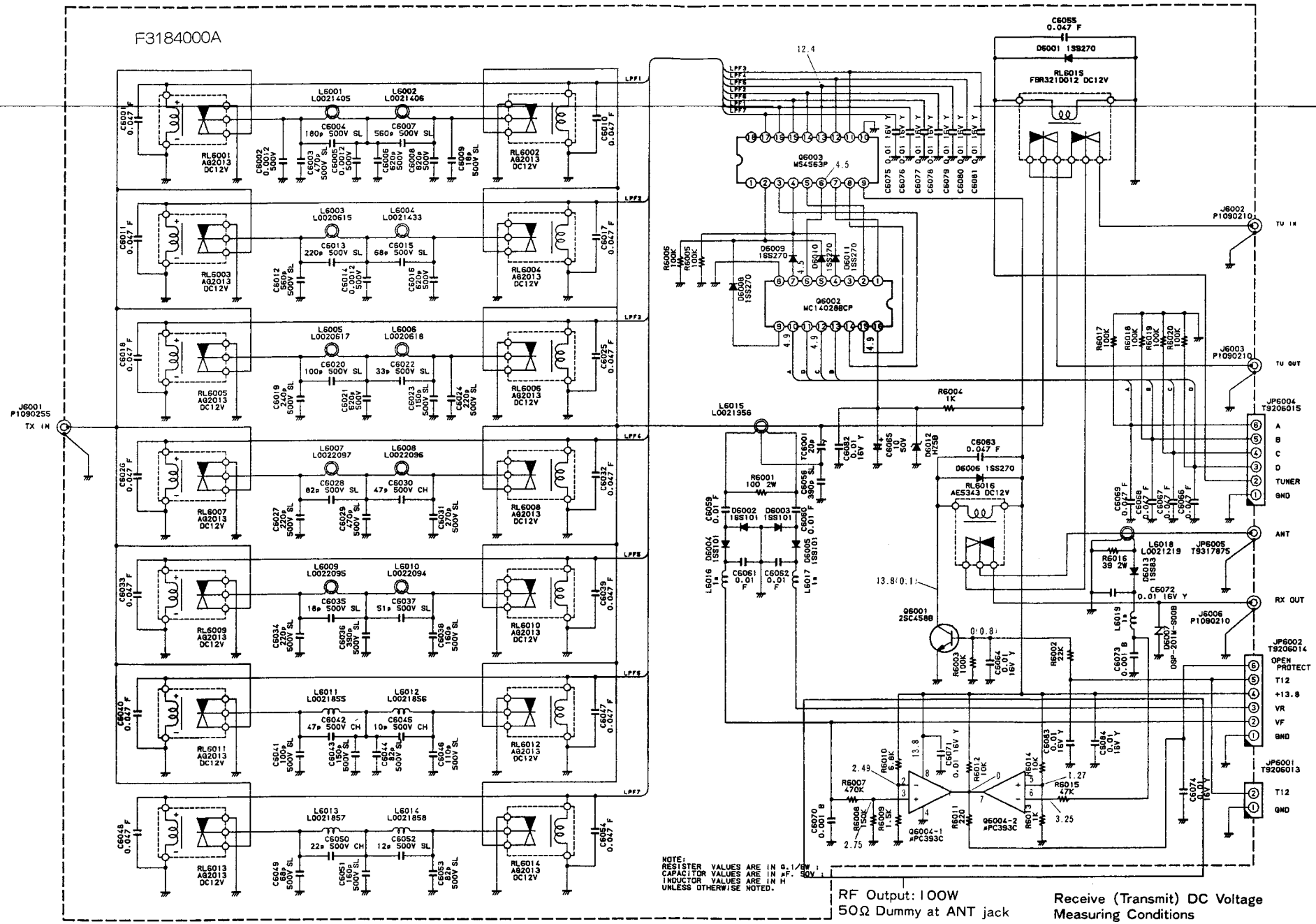
F3184000A
J6001 P1090255 TX IN
J6002 P1090210 TU IN
J6003 P1090210 TU OUT
J6004 P1090210 RX OUT
J6005 T9317875 ANT
JP6004 T9206015
JP6002 T9206014
JP6001 T9206013
TUNER
OPEN PROTECT
+13.8
VR
VF
GND
LPF1
LPF2
LPF3
LPF4
LPF5
LPF6
LPF7
RL6001 AG2013 DC12V
RL6002 AG2013 DC12V
RL6003 AG2013 DC12V
RL6004 AG2013 DC12V
RL6005 AG2013 DC12V
RL6006 AG2013 DC12V
RL6007 AG2013 DC12V
RL6008 AG2013 DC12V
RL6009 AG2013 DC12V
RL6010 AG2013 DC12V
RL6011 AG2013 DC12V
RL6012 AG2013 DC12V
RL6013 AG2013 DC12V
RL6014 AG2013 DC12V
RL6015 FBR321D012 DC12V
RL6016 AE5343 DC12V
Q6001 2SC4588
Q6002 MC140288CP
Q6003 M54563P
Q6004-1 #PC393C
Q6004-2 #PC393C
NOTE:
RESISTER VALUES ARE IN Ω, 1/8W
CAPACITOR VALUES ARE IN μF, 50V
INDUCTOR VALUES ARE IN μH
UNLESS OTHERWISE NOTED.
RF Output: 100W
50Ω Dummy at ANT jack
Receive (Transmit) DC Voltage
Measuring Conditions
Frequency: 14.200MHz
Mode: CW

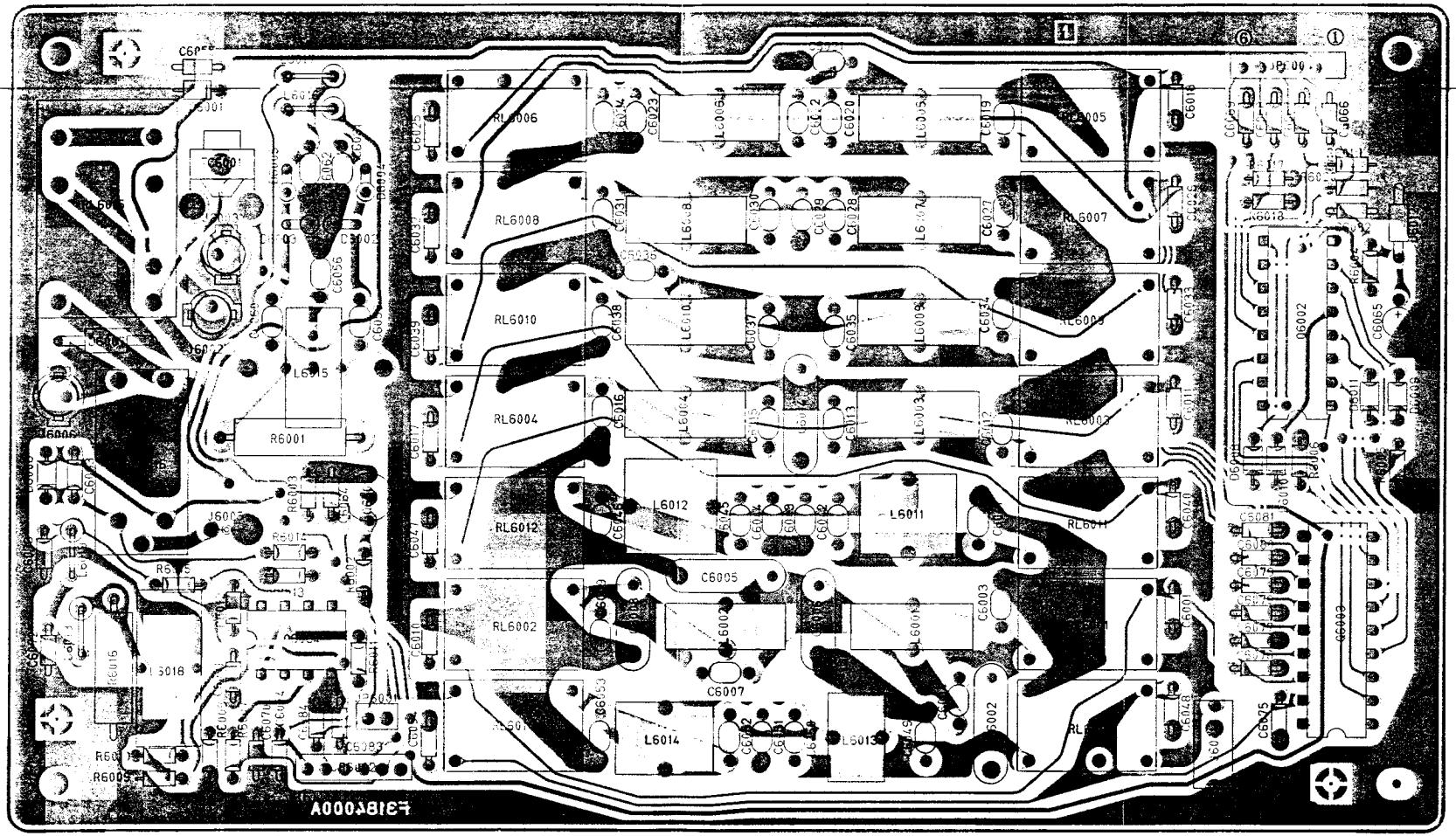

("component" side)

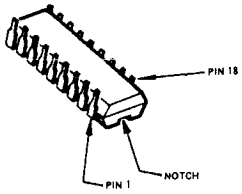

M54563P
(Q6003)

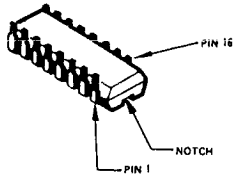

MC14028BCP
(Q6002)

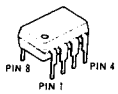

μPC393C
(Q6004)

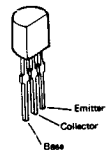

2SC458B
(Q6001)

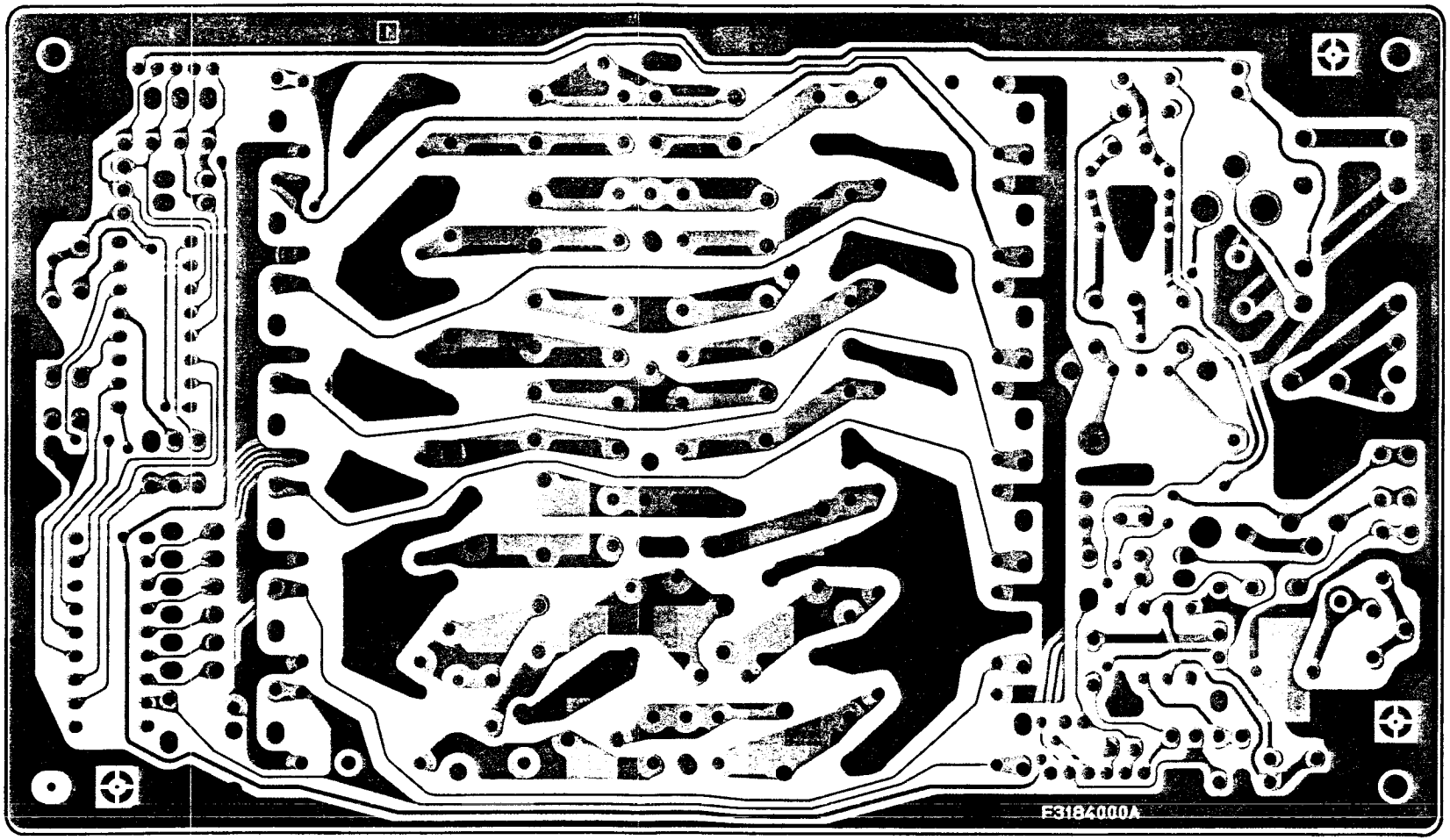

("solder" side)

REF.	YAESU P/N	DESCRIPTION	MFGR'S DESIG	VALUE	WV	TOL.	VERS.
		*** LPF UNIT ***					
	CA0231001	P.C.B. W COMP.					
	F3184000A	P.C.B. W/O COMP.					
C 6001	K28179002	CERAMIC CAP.	UP050F473Z-A-B	0.047uF	50V	F	
C 6002	K30275122	MICA CAP.	LCQ21122J5	0.0012uF	500V		
C 6003	K26270053	CERAMIC CAP.	DD11-979SL471K500	470pF	500V	SL	
C 6004	K26270043	CERAMIC CAP.	DD08-979SL181K500	180pF	500V	SL	
C 6005	K30275122	MICA CAP.	LCQ21122J5	0.0012uF	500V		
C 6006	K30275621	MICA CAP.	LCQ18621J5	620p	500V		
C 6007	K00279005	CERAMIC CAP.	DD12SL561K500	560pF	500V	SL	
C 6008	K30275821	MICA CAP.	LCQ18821J5	820pF	500V		
C 6009	K26270019	CERAMIC CAP.	DD05-979SL180K500	18pF	500V	SL	
C 6010	K28179002	CERAMIC CAP.	UP050F473Z-A-B	0.047uF	50V	F	
C 6011	K28179002	CERAMIC CAP.	UP050F473Z-A-B	0.047uF	50V	F	
C 6012	K00279005	CERAMIC CAP.	DD12SL561K500	560pF	500V	SL	
C 6013	K26270045	CERAMIC CAP.	DD09-979SL221K500	220pF	500V	SL	
C 6014	K30275122	MICA CAP.	LCQ21122J5	0.0012uF	500V		
C 6015	K26270033	CERAMIC CAP.	DD05-979SL680K500	68pF	500V	SL	
C 6016	K30275621	MICA CAP.	LCQ18621J5	620p	500V		
C 6017	K28179002	CERAMIC CAP.	UP050F473Z-A-B	0.047uF	50V	F	
C 6018	K28179002	CERAMIC CAP.	UP050F473Z-A-B	0.047uF	50V	F	
C 6019	K26270046	CERAMIC CAP.	DD09-979SL241K500	240p	500V	SL	
C 6020	K26270037	CERAMIC CAP.	DD06-979SL101K500	100pF	500V	SL	
C 6021	K30275621	MICA CAP.	LCQ18621J5	620p	500V		
C 6022	K26270025	CERAMIC CAP.	DD05-979SL330K500	33pF	500V	SL	
C 6023	K26270041	CERAMIC CAP.	DD07-979SL151K500	150pF	500V	SL	
C 6024	K26270045	CERAMIC CAP.	DD09-979SL221K500	220pF	500V	SL	
C 6025	K28179002	CERAMIC CAP.	UP050F473Z-A-B	0.047uF	50V	F	
C 6026	K28179002	CERAMIC CAP.	UP050F473Z-A-B	0.047uF	50V	F	
C 6027	K26270045	CERAMIC CAP.	DD09-979SL221K500	220pF	500V	SL	
C 6028	K26270035	CERAMIC CAP.	DD06-979SL820K500	82pF	500V	SL	
C 6029	K26270053	CERAMIC CAP.	DD11-979SL471K500	470pF	500V	SL	
C 6030	K26270128	CERAMIC CAP.	DD07-979CH470J500	47pF	500V	CH	
C 6031	K26270047	CERAMIC CAP.	DD09-979SL271K500	270pF	500V	SL	
C 6032	K28179002	CERAMIC CAP.	UP050F473Z-A-B	0.047uF	50V	F	
C 6033	K28179002	CERAMIC CAP.	UP050F473Z-A-B	0.047uF	50V	F	
C 6034	K26270045	CERAMIC CAP.	DD09-979SL221K500	220pF	500V	SL	
C 6035	K26270019	CERAMIC CAP.	DD05-979SL180K500	18pF	500V	SL	
C 6036	K26270051	CERAMIC CAP.	DD10-979SL391K500	390pF	500V	SL	
C 6037	K26270030	CERAMIC CAP.	DD05-979SL510K500	51p	500V	SL	
C 6038	K26270042	CERAMIC CAP.	DD07-979SL161K500	160p	500V	SL	
C 6039	K28179002	CERAMIC CAP.	UP050F473Z-A-B	0.047uF	50V	F	
C 6040	K28179002	CERAMIC CAP.	UP050F473Z-A-B	0.047uF	50V	F	
C 6041	K26270037	CERAMIC CAP.	DD06-979SL101K500	100pF	500V	SL	
C 6042	K26270128	CERAMIC CAP.	DD07-979CH470J500	47pF	500V	CH	
C 6043	K26270041	CERAMIC CAP.	DD07-979SL151K500	150pF	500V	SL	
C 6044	K26270035	CERAMIC CAP.	DD06-979SL820K500	82pF	500V	SL	
C 6045	K26270112	CERAMIC CAP.	DD05-979CH100D500	10pF	500V	CH	
C 6046	K26270038	CERAMIC CAP.	DD07-979SL111K500	110p	500V	SL	
C 6047	K28179002	CERAMIC CAP.	UP050F473Z-A-B	0.047uF	50V	F	
C 6048	K28179002	CERAMIC CAP.	UP050F473Z-A-B	0.047uF	50V	F	
C 6049	K26270033	CERAMIC CAP.	DD05-979SL680K500	68pF	500V	SL	

LPF Unit

REF.	YAESU P/N	DESCRIPTION	MFGR'S DESIG	VALUE	WV	TOL.	VERS.
C 6050	K26270120	CERAMIC CAP.	DD05-979CH220J500	22pF	500V	CH	
C 6051	K26270042	CERAMIC CAP.	DD07-979SL161K500	160p	500V	SL	
C 6052	K26270015	CERAMIC CAP.	DD05-979SL120K500	12pF	500V	SL	
C 6053	K26270035	CERAMIC CAP.	DD06-979SL820K500	82pF	500V	SL	
C 6054	K28179002	CERAMIC CAP.	UP050F473Z-A-B	0.047uF	50V	F	
C 6055	K28179002	CERAMIC CAP.	UP050F473Z-A-B	0.047uF	50V	F	
C 6056	K26171043	CERAMIC CAP.	DD108-979SL391J50	390pF	50V	SL	
C 6059	K26170657	CERAMIC CAP.	DD106-979F103Z50	0.01uF	50V	F	
C 6060	K26170657	CERAMIC CAP.	DD106-979F103Z50	0.01uF	50V	F	
C 6061	K26170657	CERAMIC CAP.	DD106-979F103Z50	0.01uF	50V	F	
C 6062	K26170657	CERAMIC CAP.	DD106-979F103Z50	0.01uF	50V	F	
C 6063	K28179002	CERAMIC CAP.	UP050F473Z-A-B	0.047uF	50V	F	
C 6064	K28129001	CERAMIC CAP.	EP050Y103N-A	0.01uF	16V	Y	
C 6065	K46170021	AL. ELECTRO. CAP.	50V100M5X11TR5	10uF	50V		
C 6066	K28179002	CERAMIC CAP.	UP050F473Z-A-B	0.047uF	50V	F	
C 6067	K28179002	CERAMIC CAP.	UP050F473Z-A-B	0.047uF	50V	F	
C 6068	K28179002	CERAMIC CAP.	UP050F473Z-A-B	0.047uF	50V	F	
C 6069	K28179002	CERAMIC CAP.	UP050F473Z-A-B	0.047uF	50V	F	
C 6070	K28179001	CERAMIC CAP.	UP050B102K-A-B	0.001uF	50V	B	
C 6071	K28129001	CERAMIC CAP.	EP050Y103N-A	0.01uF	16V	Y	
C 6072	K28129001	CERAMIC CAP.	EP050Y103N-A	0.01uF	16V	Y	
C 6073	K28179001	CERAMIC CAP.	UP050B102K-A-B	0.001uF	50V	B	
C 6074	K28129001	CERAMIC CAP.	EP050Y103N-A	0.01uF	16V	Y	
C 6075	K28129001	CERAMIC CAP.	EP050Y103N-A	0.01uF	16V	Y	
C 6076	K28129001	CERAMIC CAP.	EP050Y103N-A	0.01uF	16V	Y	
C 6077	K28129001	CERAMIC CAP.	EP050Y103N-A	0.01uF	16V	Y	
C 6078	K28129001	CERAMIC CAP.	EP050Y103N-A	0.01uF	16V	Y	
C 6079	K28129001	CERAMIC CAP.	EP050Y103N-A	0.01uF	16V	Y	
C 6080	K28129001	CERAMIC CAP.	EP050Y103N-A	0.01uF	16V	Y	
C 6081	K28129001	CERAMIC CAP.	EP050Y103N-A	0.01uF	16V	Y	
C 6082	K28129001	CERAMIC CAP.	EP050Y103N-A	0.01uF	16V	Y	
C 6083	K28129001	CERAMIC CAP.	EP050Y103N-A	0.01uF	16V	Y	
C 6084	K28129001	CERAMIC CAP.	EP050Y103N-A	0.01uF	16V	Y	
D 6001	G2060004	DIODE	1SS270TJ				
D 6002	G2090223	DIODE	1SS101				
D 6003	G2090223	DIODE	1SS101				
D 6004	G2090223	DIODE	1SS101				
D 6005	G2090223	DIODE	1SS101				
D 6006	G2060004	DIODE	1SS270TJ				
D 6007	Q9000375	SURGE ABSORBER	DSP201M-S00B				
D 6008	G2060004	DIODE	1SS270TJ				
D 6009	G2060004	DIODE	1SS270TJ				
D 6010	G2060004	DIODE	1SS270TJ				
D 6011	G2060004	DIODE	1SS270TJ				
D 6012	G2090242	DIODE	HZ5B				
D 6013	G2050007	DIODE	1SS83RE				
J 6001	P1090255	CONNECTOR	TMP-J01X-A2				
J 6002	P1090210	CONNECTOR	TMP-J01X-V6				
J 6003	P1090210	CONNECTOR	TMP-J01X-V6				
J 6006	P1090210	CONNECTOR	TMP-J01X-V6				
JP6001	T9206013	WIRE-ASSY					
JP6002	T9206014	WIRE-ASSY					

REF.	YAESU P/N	DESCRIPTION	MFGR'S DESIG	VALUE	WV	TOL.	VERS.
JP6004	T9206015	WIRE-ASSY					
JP6005	T9317875	WIRE-ASSY					
L 6001	L0021405	COIL	3.770U T50-2				
L 6002	L0021406	COIL	2.940U T50-2				
L 6003	L0020615	COIL	1.900U T50-2				
L 6004	L0021433	COIL	2.400U T-50-2				
L 6005	L0020617	COIL	1.100U T50-6				
L 6006	L0020618	COIL	1.320U T50-6				
L 6007	L0022097	COIL	0.90U T50-6				
L 6008	L0022096	COIL	0.76U T50-6				
L 6009	L0022095	COIL	0.65U T50-6				
L 6010	L0022094	COIL	0.55U T50-6				
L 6011	L0021855	COIL	8.0T8.5D0.9UEW R				
L 6012	L0021856	COIL	9.0T8.5D0.9UEW R				
L 6013	L0021857	COIL	6.0T8.0D0.8UEW R				
L 6014	L0021858	COIL	7.0T8.5D0.9UEW R				
L 6015	L0021956	COIL	U 2001F FR9.5				
L 6016	L1790164	M.RFC	LAL03VB102K	1mH			
L 6017	L1790164	M.RFC	LAL03VB102K	1mH			
L 6018	L0021219	COIL	1.890U 250L FR14				
L 6019	L1790164	M.RFC	LAL03VB102K	1mH			
Q 6001	G3304580B	TRANSISTOR	2SC458B				
Q 6002	G1090088	IC	MC14028BCP				
Q 6003	G1090721	IC	M54563P				
Q 6004	G1090536	IC	UPC393C				
R 6001	J22335101	METAL FILM RES.	ERG-2SJ101	100	2W		
R 6002	J07225223	CARBON FILM RES.	RD16TPJ223	22K	1/6W		
R 6003	J07225104	CARBON FILM RES.	RD16TPJ104	100K	1/6W		
R 6004	J07225102	CARBON FILM RES.	RD16TPJ102	1K	1/6W		
R 6005	J07225104	CARBON FILM RES.	RD16TPJ104	100K	1/6W		
R 6006	J07225104	CARBON FILM RES.	RD16TPJ104	100K	1/6W		
R 6007	J07225474	CARBON FILM RES.	RD16TPJ474	470K	1/6W		
R 6008	J07225154	CARBON FILM RES.	RD16TPJ154	150K	1/6W		
R 6009	J07225152	CARBON FILM RES.	RD16TPJ152	1.5K	1/6W		
R 6010	J07225682	CARBON FILM RES.	RD16TPJ682	6.8K	1/6W		
R 6011	J07225221	CARBON FILM RES.	RD16TPJ221	220	1/6W		
R 6012	J07225103	CARBON FILM RES.	RD16TPJ103	10K	1/6W		
R 6013	J07225102	CARBON FILM RES.	RD16TPJ102	1K	1/6W		
R 6014	J07225103	CARBON FILM RES.	RD16TPJ103	10K	1/6W		
R 6015	J07225473	CARBON FILM RES.	RD16TPJ473	47K	1/6W		
R 6016	J21339003	METAL FILM RES.	ERG-2SJ390	39	2W		
R 6017	J07225104	CARBON FILM RES.	RD16TPJ104	100K	1/6W		
R 6018	J07225104	CARBON FILM RES.	RD16TPJ104	100K	1/6W		
R 6019	J07225104	CARBON FILM RES.	RD16TPJ104	100K	1/6W		
R 6020	J07225104	CARBON FILM RES.	RD16TPJ104	100K	1/6W		
RL6001	M1190045	RELAY	AG2013	DC12V	DC12V		
RL6002	M1190045	RELAY	AG2013	DC12V	DC12V		
RL6003	M1190045	RELAY	AG2013	DC12V	DC12V		
RL6004	M1190045	RELAY	AG2013	DC12V	DC12V		
RL6005	M1190045	RELAY	AG2013	DC12V	DC12V		
RL6006	M1190045	RELAY	AG2013	DC12V	DC12V		

LPF Unit

REF.	YAESU P/N	DESCRIPTION	MFGR'S DESIG		VALUE	WV	TOL.	VERS.
RL6007	M1190045	RELAY	AG2013	DC12V		DC12V		
RL6008	M1190045	RELAY	AG2013	DC12V		DC12V		
RL6009	M1190045	RELAY	AG2013	DC12V		DC12V		
RL6010	M1190045	RELAY	AG2013	DC12V		DC12V		
RL6011	M1190045	RELAY	AG2013	DC12V		DC12V		
RL6012	M1190045	RELAY	AG2013	DC12V		DC12V		
RL6013	M1190045	RELAY	AG2013	DC12V		DC12V		
RL6014	M1190045	RELAY	AG2013	DC12V		DC12V		
RL6015	M1190023	RELAY	FBR321D012	DC12V		DC12V		
RL6016	M1190005	RELAY	AE5343	DC12V		DC12V		
TC6001	K91000020	TRIMMER CAP.	ECV1ZW20X40		20p			

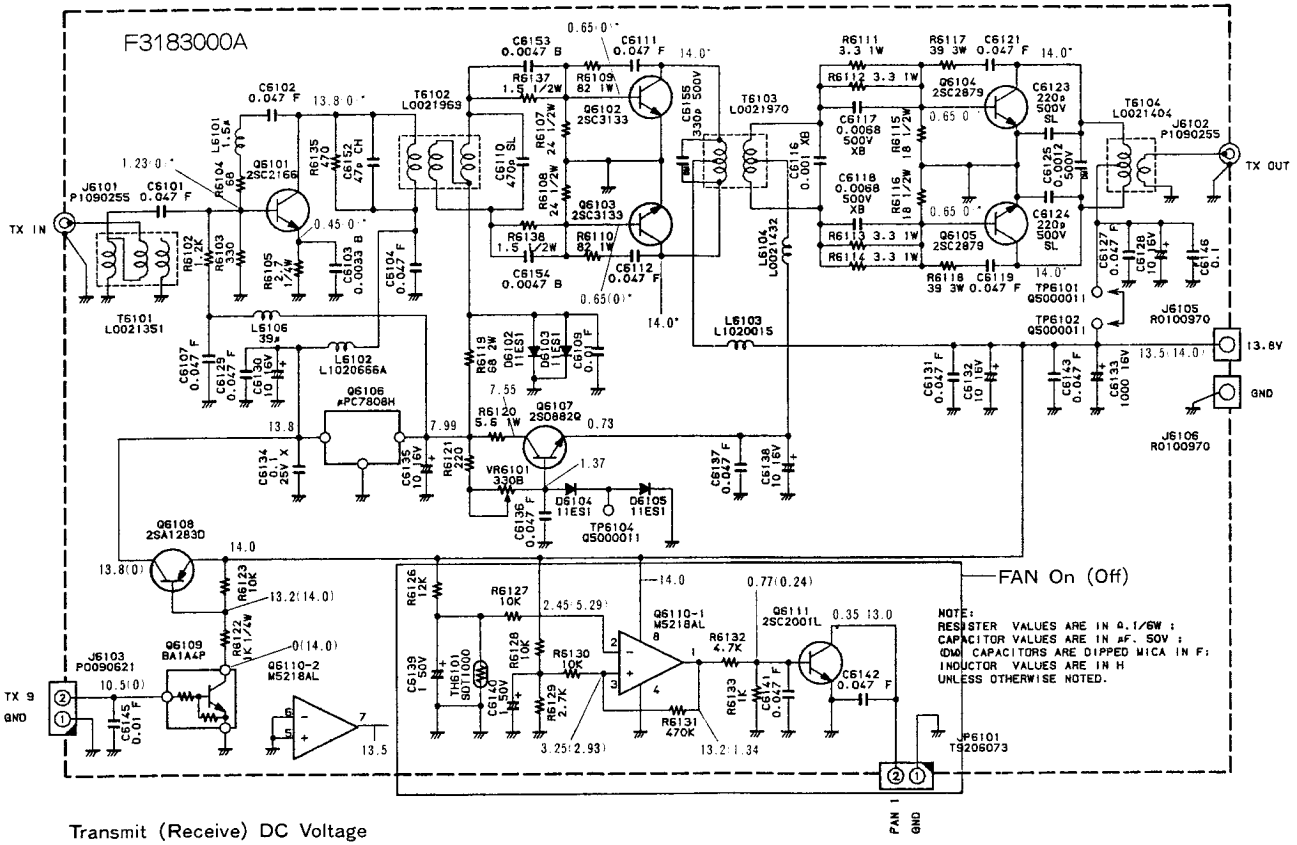

Transmit (Receive) DC Voltage
Measuring Conditions
Frequency: 14.300MHz
Mode: CW (RF Output: 100W)
*TX & KEY jack Open

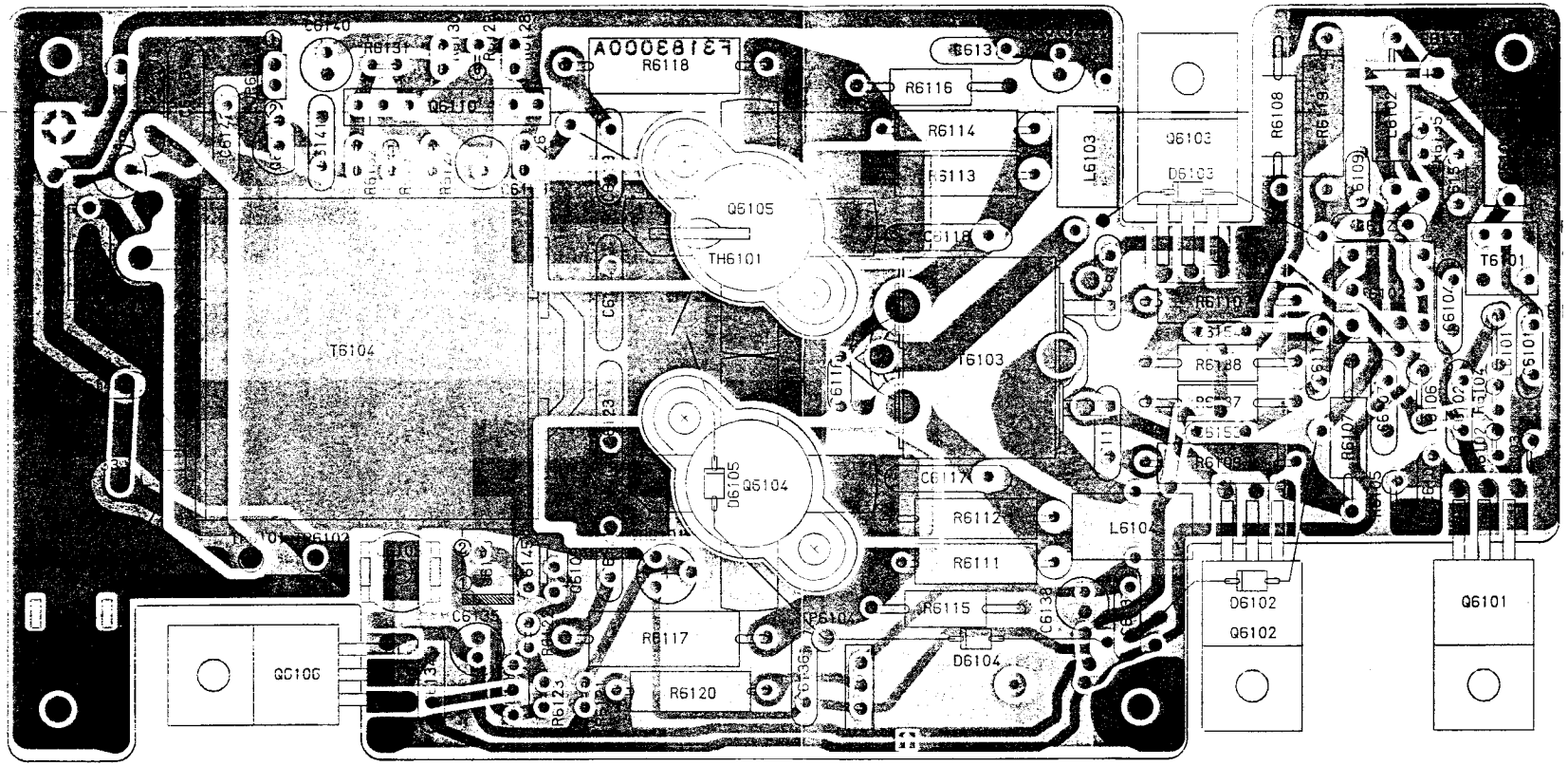

("component" side)

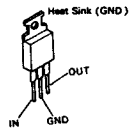

μPC7808H
(Q6106)

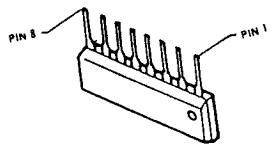

M5218AL
(Q6110)

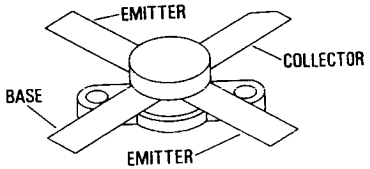

2SC2879
(Q6104, 6105)

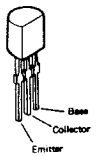

2SA1283D
(Q6108)

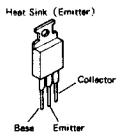

2SC2166
(Q6101)
2SC3133
(Q6102, 6103)

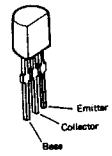

2SC2001-L
(Q6111)

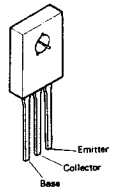

2SD882Q
(Q6107)

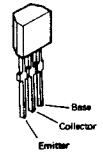

BA1A4P
(Q6109)

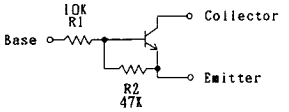

BA1A4P CUICUIT DIAGRAM

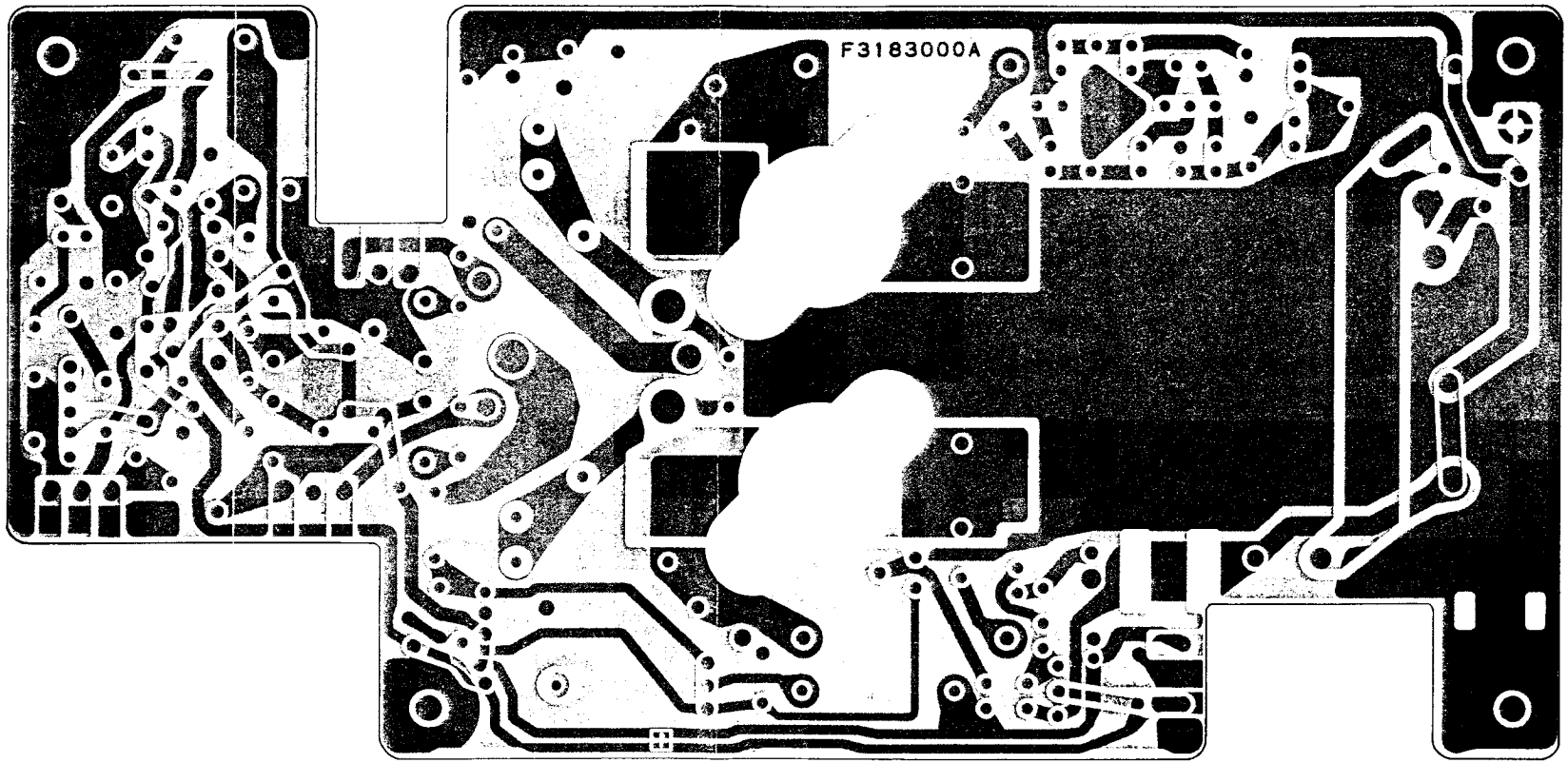

("solder" side)

REF.	YAESU P/N	DESCRIPTION	MFGR'S DESIG	VALUE	WV	TOL.	VERS.
		*** 100W PA UNIT ***					
	CS0963001	P.C.B. W COMP.					
	F3183000A	P.C.B. W/O COMP.					
C 6101	K13179009	CERAMIC CAP.	DD110F473Z50	0.047uF	50V	F	
C 6102	K13179009	CERAMIC CAP.	DD110F473Z50	0.047uF	50V	F	
C 6103	K10176332	CERAMIC CAP.	DD107B332K50	0.0033uF	50V	B	
C 6104	K13179009	CERAMIC CAP.	DD110F473Z50	0.047uF	50V	F	
C 6107	K13179009	CERAMIC CAP.	DD110F473Z50	0.047uF	50V	F	
C 6109	K13179008	CERAMIC CAP.	DD106F103Z50	0.01uF	50V	F	
C 6110	K00175471	CERAMIC CAP.	DD109SL471J50	470pF	50V	SL	
C 6111	K13179009	CERAMIC CAP.	DD110F473Z50	0.047uF	50V	F	
C 6112	K13179009	CERAMIC CAP.	DD110F473Z50	0.047uF	50V	F	
C 6116	K10179014	CERAMIC CAP.	CD050XB102K50	0.001uF	50V	XB	
C 6117	K10276682	CERAMIC CAP.	CD130XB682K500	0.0068uF	500V	XB	
C 6118	K10276682	CERAMIC CAP.	CD130XB682K500	0.0068uF	500V	XB	
C 6119	K13179009	CERAMIC CAP.	DD110F473Z50	0.047uF	50V	F	
C 6121	K13179009	CERAMIC CAP.	DD110F473Z50	0.047uF	50V	F	
C 6123	K00275221	CERAMIC CAP.	DD12SL221J500	220pF	500V	SL	
C 6124	K00275221	CERAMIC CAP.	DD12SL221J500	220pF	500V	SL	
C 6125	K30279095	MICA CAP.	DM19D122J5	0.0012	500V		
C 6127	K13179009	CERAMIC CAP.	DD110F473Z50	0.047uF	50V	F	
C 6128	K40129004	AL. ELECTRO. CAP.	RE-16V100M	10uF	16V		
C 6129	K13179009	CERAMIC CAP.	DD110F473Z50	0.047uF	50V	F	
C 6130	K40129004	AL. ELECTRO. CAP.	RE-16V100M	10uF	16V		
C 6131	K13179009	CERAMIC CAP.	DD110F473Z50	0.047uF	50V	F	
C 6132	K40129004	AL. ELECTRO. CAP.	RE-16V100M	10uF	16V		
C 6133	K40129021	AL. ELECTRO. CAP.	16R102S 13X16	1000uF	16V		
C 6134	K19149025	CERAMIC CAP.	UAT10X104K-L45AE	0.1uF	25V	X	
C 6135	K40129004	AL. ELECTRO. CAP.	RE-16V100M	10uF	16V		
C 6136	K13179009	CERAMIC CAP.	DD110F473Z50	0.047uF	50V	F	
C 6137	K13179009	CERAMIC CAP.	DD110F473Z50	0.047uF	50V	F	
C 6138	K40129004	AL. ELECTRO. CAP.	RE-16V100M	10uF	16V		
C 6139	K40179013	AL. ELECTRO. CAP.	RE-50V010M	1uF	50V		
C 6140	K40179013	AL. ELECTRO. CAP.	RE-50V010M	1uF	50V		
C 6141	K13179009	CERAMIC CAP.	DD110F473Z50	0.047uF	50V	F	
C 6142	K13179009	CERAMIC CAP.	DD110F473Z50	0.047uF	50V	F	
C 6143	K13179009	CERAMIC CAP.	DD110F473Z50	0.047uF	50V	F	
C 6145	K13179008	CERAMIC CAP.	DD106F103Z50	0.01uF	50V	F	
C 6146	K50170001	FILM CAP.	ECQ-M1H104KZ	0.1	50V		
C 6152	K02175470	CERAMIC CAP.	DD106CH470J50	47pF	50V	CH	
C 6153	K10179025	CERAMIC CAP.	CK45B1H472MYS	0.0047uF	50V	B	
C 6154	K10179025	CERAMIC CAP.	CK45B1H472MYS	0.0047uF	50V	B	
C 6155	K30276331	MICA CAP.	LCQ17331K5	330pF	500V		
D 6102	G2090499	DIODE	1ES1				
D 6103	G2090499	DIODE	1ES1				
D 6104	G2090499	DIODE	1ES1				
D 6105	G2090499	DIODE	1ES1				
J 6101	P1090255	CONNECTOR	TMP-J01X-A2				
J 6102	P1090255	CONNECTOR	TMP-J01X-A2				
J 6103	P0090621	CONNECTOR	SC25-02WS				

100-W Power Amp (PA) Unit

REF.	YAESU P/N	DESCRIPTION	MFGR'S DESIG	VALUE	WV	TOL.	VERS.
J 6105	R0100970	TERMINAL					
J 6106	R0100970	TERMINAL					
JP6101	T9206073	WIRE-ASSY					
L 6101	L1790130	M.RFC	LAL03VB1R5M	1.5u			
L 6102	L1020666A	RFC	43T0.16 4X9CB-20				
L 6103	L1020015	RFC	FB-43-5111				
L 6104	L0021432	COIL	41.00U 3A FR9.5-5				
L 6106	L1790147	M.RFC	LAL03VB390K	39uH			
Q 6101	G3321660	TRANSISTOR	2SC2166				
Q 6102	G3090086	TRANSISTOR	2SC3133-21				
Q 6103	G3090086	TRANSISTOR	2SC3133-21				
Q 6104	G3328790	TRANSISTOR	2SC2879				
Q 6105	G3328790	TRANSISTOR	2SC2879				
Q 6106	G1090294	IC	UPC7808H				
Q 6107	G3408820Q	TRANSISTOR	2SD882Q				
Q 6108	G3112830D	TRANSISTOR	2SA1283D				
Q 6109	G3090079	TRANSISTOR	BA1A4P				
Q 6110	G1091140	IC	M5218AL				
Q 6111	G3320010L	TRANSISTOR	2SC2001-L				
R 6102	J02225122	CARBON FILM RES.	RD16UJ122	1.2K	1/6W		
R 6103	J02225331	CARBON FILM RES.	RD16UJ331	330	1/6W		
R 6104	J02225680	CARBON FILM RES.	RD16UJ680	68	1/6W		
R 6105	J02245279	CARBON FILM RES.	RD14SJ2R7	2.7	1/4W		
R 6107	J01275240	CARBON FILM RES.	RD12TJ240	24	1/2W		
R 6108	J01275240	CARBON FILM RES.	RD12TJ240	24	1/2W		
R 6109	J20306820	METAL FILM RES.	RS1B 1W K	82	1W		
R 6110	J20306820	METAL FILM RES.	RS1B 1W K	82	1W		
R 6111	J20306339	METAL FILM RES.	RS1B 1W K	3.3	1W		
R 6112	J20306339	METAL FILM RES.	RS1B 1W K	3.3	1W		
R 6113	J20306339	METAL FILM RES.	RS1B 1W K	3.3	1W		
R 6114	J20306339	METAL FILM RES.	RS1B 1W K	3.3	1W		
R 6115	J01275180	CARBON FILM RES.	RD12TJ180	18	1/2W		
R 6116	J01275180	CARBON FILM RES.	RD12TJ180	18	1/2W		
R 6117	J22359001	METAL FILM RES.	ERG-3SJ390	39	3W		
R 6118	J22359001	METAL FILM RES.	ERG-3SJ390	39	3W		
R 6119	J21339004	METAL FILM RES.	ERG-2SJ680	68	2W		
R 6120	J20306569	METAL FILM RES.	RS1B 1W K	5.6	1W		
R 6121	J02225221	CARBON FILM RES.	RD16UJ221	220	1/6W		
R 6122	J02245102	CARBON FILM RES.	RD14SJ102	1K	1/4W		
R 6123	J02225103	CARBON FILM RES.	RD16UJ103	10K	1/6W		
R 6126	J02225123	CARBON FILM RES.	RD16UJ123	12K	1/6W		
R 6127	J02225103	CARBON FILM RES.	RD16UJ103	10K	1/6W		
R 6128	J02225103	CARBON FILM RES.	RD16UJ103	10K	1/6W		
R 6129	J02225272	CARBON FILM RES.	RD16UJ272	2.7K	1/6W		
R 6130	J02225103	CARBON FILM RES.	RD16UJ103	10K	1/6W		
R 6131	J02225474	CARBON FILM RES.	RD16UJ474	470K	1/6W		
R 6132	J02225472	CARBON FILM RES.	RD16UJ472	4.7K	1/6W		
R 6133	J02225102	CARBON FILM RES.	RD16UJ102	1K	1/6W		
R 6135	J02225471	CARBON FILM RES.	RD16UJ471	470	1/6W		
R 6137	J01275159	CARBON FILM RES.	RD12TJ1R5	1.5	1/2W		
R 6138	J01275159	CARBON FILM RES.	RD12TJ1R5	1.5	1/2W		

REF.	YAESU P/N	DESCRIPTION	MFGR'S DESIG	VALUE	WV	TOL.	VERS.
T 6101	L0021351	COIL	4-1 2001F FR6				
T 6102	L0021969	COIL	- 3A6 RIB3X7				
T 6103	L0021970	COIL	D12A RIB10X				
T 6104	L0021404	COIL	D12A RIB16				
TH6101	G9090011	THERMISTOR	SDT1000				
TP6101	Q5000011	WRAPPING TERMINAL	C				
TP6102	Q5000011	WRAPPING TERMINAL	C				
TP6104	Q5000011	WRAPPING TERMINAL	C				
VR6101	J51745331	POT.	H0651A004-330B	330		B	
	R0103760	TR HEATSINK					

Notes:

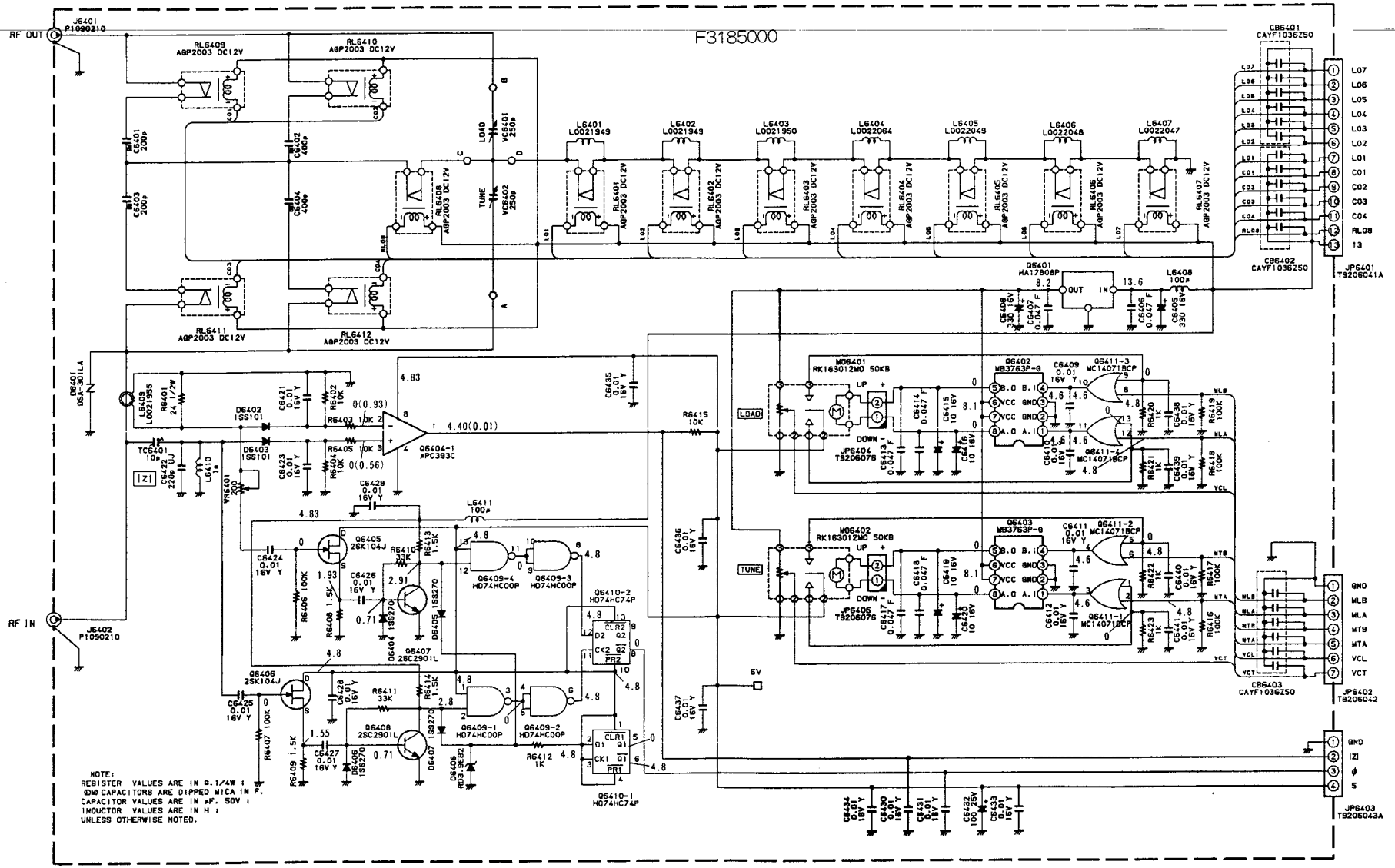

TUNER Off (On, after tuning) DC Voltage
Measuring Conditions
Frequency: 14.200MHz
Mode: CW

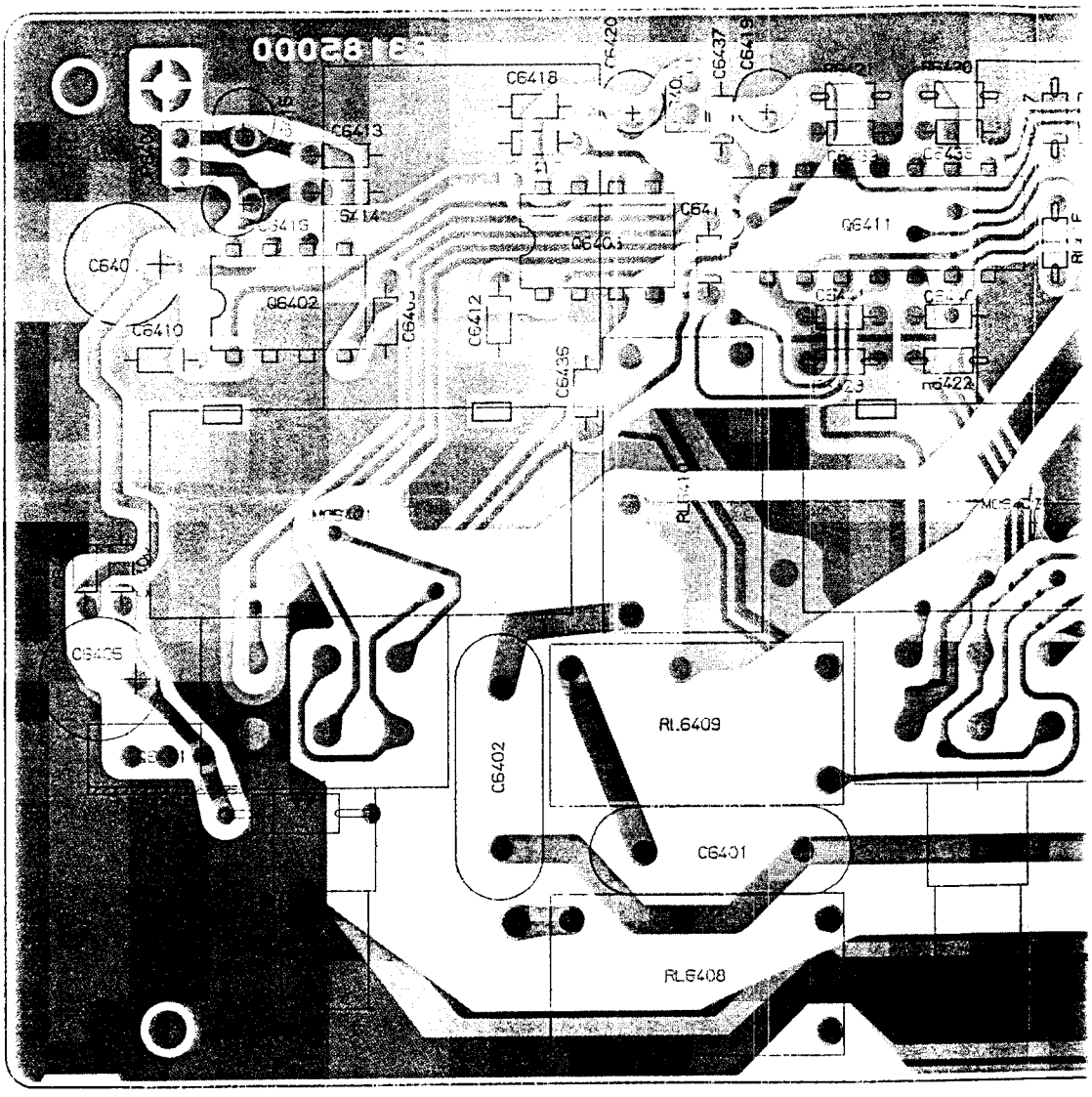
C6418
C6413
C6420
C6437
C6419
C6411
C6402
C6410
C6412
C6436
C6405
RL6409
C6402
C6401
RL6408

C6418
C6420
C6437
C6419
Q6411
C6412
C6436
RL6409
RL6411
RL6408
C6402
C6401
C6404
C6403
C6409
RL6401
RL6402
RL6403

L6401
L6402
L6403
L6404
L6405
L6406
L6407
RL6401
RL6402
RL6403
RL6404
RL6406
RL6407
VR6401
D6401
D6402
D6403
D6404
D6405
D6406
D6407
R6403
R6404
R6405
R6406
R6407
C6423
C6424
C6425
C6426
C6427
C6428
C6429
C6430
C6431
C6432
C6433
C6434
C6435
C6436
C6437
C6438
C6439
C6440
C6441
C6442
C6443
C6444
C6445
C6446
C6447
C6448
C6449
C6450
C6451
C6452
C6453
C6454
C6455
C6456
C6457
C6458
C6459
C6460
C6461
C6462
C6463
C6464
C6465
C6466
C6467
C6468
C6469
C6470
C6471
C6472
C6473
C6474
C6475
C6476
C6477
C6478
C6479
C6480
C6481
C6482
C6483
C6484
C6485
C6486
C6487
C6488
C6489
C6490
C6491
C6492
C6493
C6494
C6495
C6496
C6497
C6498
C6499
C6500
C6501
C6502
C6503
C6504
C6505
C6506
C6507
C6508
C6509
C6510
C6511
C6512
C6513
C6514
C6515
C6516
C6517
C6518
C6519
C6520
C6521
C6522
C6523
C6524
C6525
C6526
C6527
C6528
C6529
C6530
C6531
C6532
C6533
C6534
C6535
C6536
C6537
C6538
C6539
C6540
C6541
C6542
C6543
C6544
C6545
C6546
C6547
C6548
C6549
C6550
C6551
C6552
C6553
C6554
C6555
C6556
C6557
C6558
C6559
C6560
C6561
C6562
C6563
C6564
C6565
C6566
C6567
C6568
C6569
C6570
C6571
C6572
C6573
C6574
C6575
C6576
C6577
C6578
C6579
C6580
C6581
C6582
C6583
C6584
C6585
C6586
C6587
C6588
C6589
C6590
C6591
C6592
C6593
C6594
C6595
C6596
C6597
C6598
C6599
C6600
C6601
C6602
C6603
C6604
C6605
C6606
C6607
C6608
C6609
C6610
C6611
C6612
C6613
C6614
C6615
C6616
C6617
C6618
C6619
C6620
C6621
C6622
C6623
C6624
C6625
C6626
C6627
C6628
C6629
C6630
C6631
C6632
C6633
C6634
C6635
C6636
C6637
C6638
C6639
C6640
C6641
C6642
C6643
C6644
C6645
C6646
C6647
C6648
C6649
C6650
C6651
C6652
C6653
C6654
C6655
C6656
C6657
C6658
C6659
C6660
C6661
C6662
C6663
C6664
C6665
C6666
C6667
C6668
C6669
C6670
C6671
C6672
C6673
C6674
C6675
C6676
C6677
C6678
C6679
C6680
C6681
C6682
C6683
C6684
C6685
C6686
C6687
C6688
C6689
C6690
C6691
C6692
C6693
C6694
C6695
C6696
C6697
C6698
C6699
C6700
C6701
C6702
C6703
C6704
C6705
C6706
C6707
C6708
C6709
C6710
C6711
C6712
C6713
C6714
C6715
C6716
C6717
C6718
C6719
C6720
C6721
C6722
C6723
C6724
C6725
C6726
C6727
C6728
C6729
C6730
C6731
C6732
C6733
C6734
C6735
C6736
C6737
C6738
C6739
C6740
C6741
C6742
C6743
C6744
C6745
C6746
C6747
C6748
C6749
C6750
C6751
C6752
C6753
C6754
C6755
C6756
C6757
C6758
C6759
C6760
C6761
C6762
C6763
C6764
C6765
C6766
C6767
C6768
C6769
C6770
C6771
C6772
C6773
C6774
C6775
C6776
C6777
C6778
C6779
C6780
C6781
C6782
C6783
C6784
C6785
C6786
C6787
C6788
C6789
C6790
C6791
C6792
C6793
C6794
C6795
C6796
C6797
C6798
C6799
C6800
C6801
C6802
C6803
C6804
C6805
C6806
C6807
C6808
C6809
C6810
C6811
C6812
C6813
C6814
C6815
C6816
C6817
C6818
C6819
C6820
C6821
C6822
C6823
C6824
C6825
C6826
C6827
C6828
C6829
C6830
C6831
C6832
C6833
C6834
C6835
C6836
C6837
C6838
C6839
C6840
C6841
C6842
C6843
C6844
C6845
C6846
C6847
C6848
C6849
C6850
C6851
C6852
C6853
C6854
C6855
C6856
C6857
C6858
C6859
C6860
C6861
C6862
C6863
C6864
C6865
C6866
C6867
C6868
C6869
C6870
C6871
C6872
C6873
C6874
C6875
C6876
C6877
C6878
C6879
C6880
C6881
C6882
C6883
C6884
C6885
C6886
C6887
C6888
C6889
C6890
C6891
C6892
C6893
C6894
C6895
C6896
C6897
C6898
C6899
C6900
C6901
C6902
C6903
C6904
C6905
C6906
C6907
C6908
C6909
C6910
C6911
C6912
C6913
C6914
C6915
C6916
C6917
C6918
C6919
C6920
C6921
C6922
C6923
C6924
C6925
C6926
C6927
C6928
C6929
C6930
C6931
C6932
C6933
C6934
C6935
C6936
C6937
C6938
C6939
C6940
C6941
C6942
C6943
C6944
C6945
C6946
C6947
C6948
C6949
C6950
C6951
C6952
C6953
C6954
C6955
C6956
C6957
C6958
C6959
C6960
C6961
C6962
C6963
C6964
C6965
C6966
C6967
C6968
C6969
C6970
C6971
C6972
C6973
C6974
C6975
C6976
C6977
C6978
C6979
C6980
C6981
C6982
C6983
C6984
C6985
C6986
C6987
C6988
C6989
C6990
C6991
C6992
C6993
C6994
C6995
C6996
C6997
C6998
C6999
C7000
C7001
C7002
C7003
C7004
C7005
C7006
C7007
C7008
C7009
C7010
C7011
C7012
C7013
C7014
C7015
C7016
C7017
C7018
C7019
C7020
C7021
C7022
C7023
C7024
C7025
C7026
C7027
C7028
C7029
C7030
C7031
C7032
C7033
C7034
C7035
C7036
C7037
C7038
C7039
C7040
C7041
C7042
C7043
C7044
C7045
C7046
C7047
C7048
C7049
C7050
C7051
C7052
C7053
C7054
C7055
C7056
C7057
C7058
C7059
C7060
C7061
C7062
C7063
C7064
C7065
C7066
C7067
C7068
C7069
C7070
C7071
C7072
C7073
C7074
C7075
C7076
C7077
C7078
C7079
C7080
C7081
C7082
C7083
C7084
C7085
C7086
C7087
C7088
C7089
C7090
C7091
C7092
C7093
C7094
C7095
C7096
C7097
C7098
C7099
C7100
C7101
C7102
C7103
C7104
C7105
C7106
C7107
C7108
C7109
C7110
C7111
C7112
C7113
C7114
C7115
C7116
C7117
C7118
C7119
C7120
C7121
C7122
C7123
C7124
C7125
C7126
C7127
C7128
C7129
C7130
C7131
C7132
C7133
C7134
C7135
C7136
C7137
C7138
C7139
C7140
C7141
C7142
C7143
C7144
C7145
C7146
C7147
C7148
C7149
C7150
C7151
C7152
C7153
C7154
C7155
C7156
C7157
C7158
C7159
C7160
C7161
C7162
C7163
C7164
C7165
C7166
C7167
C7168
C7169
C7170
C7171
C7172
C7173
C7174
C7175
C7176
C7177
C7178
C7179
C7180
C7181
C7182
C7183
C7184
C7185
C7186
C7187
C7188
C7189
C7190
C7191
C7192
C7193
C7194
C7195
C7196
C7197
C7198
C7199
C7200
C7201
C7202
C7203
C7204
C7205
C7206
C7207
C7208
C7209
C7210
C7211
C7212
C7213
C7214
C7215
C7216
C7217
C7218
C7219
C7220
C7221
C7222
C7223
C7224
C7225
C7226
C7227
C7228
C7229
C7230
C7231
C7232
C7233
C7234
C7235
C7236
C7237
C7238
C7239
C7240
C7241
C7242
C7243
C7244
C7245
C7246
C7247
C7248
C7249
C7250
C7251
C7252
C7253
C7254
C7255
C7256
C7257
C7258
C7259
C7260
C7261
C7262
C7263
C7264
C7265
C7266
C7267
C7268
C7269
C7270
C7271
C7272
C7273
C7274
C7275
C7276
C7277
C7278
C7279
C7280
C7281
C7282
C7283
C7284
C7285
C7286
C7287
C7288
C7289
C7290
C7291
C7292
C7293
C7294
C7295
C7296
C7297
C7298
C7299
C7300
C7301
C7302
C7303
C7304
C7305
C7306
C7307
C7308
C7309
C7310
C7311
C7312
C7313
C7314
C7315
C7316
C7317
C7318
C7319
C7320
C7321
C7322
C7323
C7324
C7325
C7326
C7327
C7328
C7329
C7330
C7331
C7332
C7333
C7334
C7335
C7336
C7337
C7338
C7339
C7340
C7341
C7342
C7343
C7344
C7345
C7346
C7347
C7348
C7349
C7350
C7351
C7352
C7353
C7354
C7355
C7356
C7357
C7358
C7359
C7360
C7361
C7362
C7363
C7364
C7365
C7366
C7367
C7368
C7369
C7370
C7371
C7372
C7373
C7374
C7375
C7376
C7377
C7378
C7379
C7380
C7381
C7382
C7383
C7384
C7385
C7386
C7387
C7388
C7389
C7390
C7391
C7392
C7393
C7394
C7395
C7396
C7397
C7398
C7399
C7400
C7401
C7402
C7403
C7404
C7405
C7406
C7407
C7408
C7409
C7410
C7411
C7412
C7413
C7414
C7415
C7416
C7417
C7418
C7419
C7420
C7421
C7422
C7423
C7424
C7425
C7426
C7427
C7428
C7429
C7430
C7431
C7432
C7433
C7434
C7435
C7436
C7437
C7438
C7439
C7440
C7441
C7442
C7443
C7444
C7445
C7446
C7447
C7448
C7449
C7450
C7451
C7452
C7453
C7454
C7455
C7456
C7457
C7458
C7459
C7460
C7461
C7462
C7463
C7464
C7465
C7466
C7467
C7468
C7469
C7470
C7471
C7472
C7473
C7474
C7475
C7476
C7477
C7478
C7479
C7480
C7481
C7482
C7483
C7484
C7485
C7486
C7487
C7488
C7489
C7490
C7491
C7492
C7493
C7494
C7495
C7496
C7497
C7498
C7499
C7500
C7501
C7502
C7503
C7504
C7505
C7506
C7507
C7508
C7509
C7510
C7511
C7512
C7513
C7514
C7515
C7516
C7517
C7518
C7519
C7520
C7521
C7522
C7523
C7524
C7525
C7526
C7527
C7528
C7529
C7530
C7531
C7532
C7533
C7534
C7535
C7536
C7537
C7538
C7539
C7540
C7541
C7542
C7543
C7544
C7545
C7546
C7547
C7548
C7549
C7550
C7551
C7552
C7553
C7554
C7555
C7556
C7557
C7558
C7559
C7560
C7561
C7562
C7563
C7564
C7565
C7566
C7567
C7568
C7569
C7570
C7571
C7572
C7573
C7574
C7575
C7576
C7577
C7578
C7579
C7580
C7581
C7582
C7583
C7584
C7585
C7586
C7587
C7588
C7589
C7590
C7591
C7592
C7593
C7594
C7595
C7596
C7597
C7598
C7599
C7600
C7601
C7602
C7603
C7604
C7605
C7606
C7607
C7608
C7609
C7610
C7611
C7612
C7613
C7614
C7615
C7616
C7617
C7618
C7619
C7620
C7621
C7622
C7623
C7624
C7625
C7626
C7627
C7628
C7629
C7630
C7631
C7632
C7633
C7634
C7635
C7636
C7637
C7638
C7639
C7640
C7641
C7642
C7643
C7644
C7645
C7646
C7647
C7648
C7649
C7650
C7651
C7652
C7653
C7654
C7655
C7656
C7657
C7658
C7659
C7660
C7661
C7662
C7663
C7664
C7665
C7666
C7667
C7668
C7669
C7670
C7671
C7672
C7673
C7674
C7675
C7676
C7677
C7678
C7679
C7680
C7681
C7682
C7683
C7684
C7685
C7686
C7687
C7688
C7689
C7690
C7691
C7692
C7693
C7694
C7695
C7696
C7697
C7698
C7699
C7700
C7701
C7702
C7703
C7704
C7705
C7706
C7707
C7708
C7709
C7710
C7711
C7712
C7713
C7714
C7715
C7716
C7717
C7718
C7719
C7720
C7721
C7722
C7723
C7724
C7725
C7726
C7727
C7728
C7729
C7730
C7731
C7732
C7733
C7734
C7735
C7736
C7737
C7738
C7739
C7740
C7741
C7742
C7743
C7744
C7745
C7746
C7747
C7748
C7749
C7750
C7751
C7752
C7753
C7754
C7755
C7756
C7757
C7758
C7759
C7760
C7761
C7762
C7763
C7764
C7765
C7766
C7767
C7768
C7769
C7770
C7771
C7772
C7773
C7774
C7775
C7776
C7777
C7778
C7779
C7780
C7781
C7782
C7783
C7784
C7785
C7786
C7787
C7788
C7789
C7790
C7791
C7792
C7793
C7794
C7795
C7796
C7797
C7798
C7799
C7800
C7801
C7802
C7803
C7804
C7805
C7806
C7807
C7808
C7809
C7810
C7811
C7812
C7813
C7814
C7815
C7816
C7817
C7818
C7819
C7820
C7821
C7822
C7823
C7824
C7825
C7826
C7827
C7828
C7829
C7830
C7831
C7832
C7833
C7834
C7835
C7836
C7837
C7838
C7839
C7840
C7841
C7842
C7843
C7844
C7845
C7846
C7847
C7848
C7849
C7850
C7851
C7852
C7853
C7854
C7855
C7856
C7857
C7858
C7859
C7860
C7861
C7862
C7863
C7864
C7865
C7866
C7867
C7868
C7869
C7870
C7871
C7872
C7873
C7874
C7875
C7876
C7877
C7878
C7879
C7880
C7881
C7882
C7883
C7884
C7885
C7886
C7887
C7888
C7889
C7890
C7891
C7892
C7893
C7894
C7895
C7896
C7897
C7898
C7899
C7900
C7901
C7902
C7903
C7904
C7905
C7906
C7907
C7908
C7909
C7910
C7911
C7912
C7913
C7914
C7915
C7916
C7917
C7918
C7919
C7920
C7921
C7922
C7923
C7924
C7925
C7926
C7927
C7928
C7929
C7930
C7931
C7932
C7933
C7934
C7935
C7936
C7937
C7938
C7939
C7940
C7941
C7942
C7943
C7944
C7945
C7946
C7947
C7948
C7949
C7950
C7951
C7952
C7953
C7954
C7955
C7956
C7957
C7958
C7959
C7960
C7961
C7962
C7963
C7964
C7965
C7966
C7967
C7968
C7969
C7970
C7971
C7972
C7973
C7974
C7975
C7976
C7977
C7978
C7979
C7980
C7981
C7982
C7983
C7984
C7985
C7986
C7987
C7988
C7989
C7990
C7991
C7992
C7993
C7994
C7995
C7996
C7997
C7998
C7999
C8000
C8001
C8002
C8003
C8004
C8005
C8006
C8007
C8008
C8009
C8010
C8011
C8012
C8013
C8014
C8015
C8016
C8017
C8018
C8019
C8020
C8021
C8022
C8023
C8024
C8025
C8026
C8027
C8028
C8029
C8030
C8031
C8032
C8033
C8034
C8035
C8036
C8037
C8038
C8039
C8040
C8041
C8042
C8043
C8044
C8045
C8046
C8047
C8048
C8049
C8050
C8051
C8052
C8053
C8054
C8055
C8056
C8057
C8058
C8059
C8060
C8061
C8062
C8063
C8064
C8065
C8066
C8067
C8068
C8069
C8070
C8071
C8072
C8073
C8074
C8075
C8076
C8077
C8078
C8079
C8080
C8081
C8082
C8083
C8084
C8085
C8086
C8087
C8088
C8089
C8090
C8091
C8092
C8093
C8094
C8095
C8096
C8097
C8098
C8099
C8100
C8101
C8102
C8103
C8104
C8105
C8106
C8107
C8108
C8109
C8110
C8111
C8112
C8113
C8114
C8115
C8116
C8117
C8118
C8119
C8120
C8121
C8122
C8123
C8124
C8125
C8126
C8127
C8128
C8129
C8130
C8131
C8132
C8133
C8134
C8135
C8136
C8137
C8138
C8139
C8140
C8141
C8142
C8143
C8144
C8145
C8146
C8147
C8148
C8149
C8150
C8151
C8152
C8153
C8154
C8155
C8156
C8157
C8158
C8159
C8160
C8161
C8162
C8163
C8164
C8165
C8166
C8167
C8168
C8169
C8170
C8171
C8172
C8173
C8174
C8175
C8176
C8177
C8178
C8179
C8180
C8181
C8182
C8183
C8184
C8185
C8186
C8187
C8188
C8189
C8190
C8191
C8192
C8193
C8194
C8195
C8196
C8197
C8198
C8199
C8200
C8201
C8202
C8203
C8204
C8205
C8206
C8207
C8208
C8209
C8210
C8211
C8212
C8213
C8214
C8215
C8216
C8217
C8218
C8219
C8220
C8221
C8222
C8223
C8224
C8225
C8226
C8227
C8228
C8229
C8230
C8231
C8232
C8233
C8234
C8235
C8236
C8237
C8238
C8239
C8240
C8241
C8242
C8243
C8244
C8245
C8246
C8247
C8248
C8249
C8250
C8251
C8252
C8253
C8254
C8255
C8256
C8257
C8258
C8259
C8260
C8261
C8262
C8263
C8264
C8265
C8266
C8267
C8268
C8269
C8270
C8271
C8272
C8273
C8274
C8275
C8276
C8277
C8278
C8279
C8280
C8281
C8282
C8283
C8284
C8285
C8286
C8287
C8288
C8289
C8290
C8291
C8292
C8293
C8294
C8295
C8296
C8297
C8298
C8299
C8300
C8301
C8302
C8303
C8304
C8305
C8306
C8307
C8308
C8309
C8310
C8311
C8312
C8313
C8314
C8315
C8316
C8317
C8318
C8319
C8320
C8321
C8322
C8323
C8324
C8325
C8326
C8327
C8328
C8329
C8330
C8331
C8332
C8333
C8334
C8335
C8336
C8337
C8338
C8339
C8340
C8341
C8342
C8343
C8344
C8345
C8346
C8347
C8348
C8349
C8350
C8351
C8352
C8353
C8354
C8355
C8356
C8357
C8358
C8359
C8360
C8361
C8362
C8363
C8364
C8365
C8366
C8367
C8368
C8369
C8370
C8371
C8372
C8373
C8374
C8375
C8376
C8377
C8378
C8379
C8380
C8381
C8382
C8383
C8384
C8385
C8386
C8387
C8388
C8389
C8390
C8391
C8392
C8393
C8394
C8395
C8396
C8397
C8398
C8399
C8400
C8401
C8402
C8403
C8404
C8405
C8406
C8407
C8408
C8409
C8410
C8411
C8412
C8413
C8414
C8415
C8416
C8417
C8418
C8419
C8420
C8421
C8422
C8423
C8424
C8425
C8426
C8427
C8428
C8429
C8430
C8431
C8432
C8433
C8434
C8435
C8436
C8437
C8438
C8439
C8440
C8441
C8442
C8443
C8444
C8445
C8446
C8447
C8448
C8449
C8450
C8451
C8452
C8453
C8454
C8455
C8456
C8457
C8458
C8459
C8460
C8461
C8462
C8463
C8464
C8465
C8466
C8467
C8468
C8469
C8470
C8471
C8472
C8473
C8474
C8475
C8476
C8477
C8478
C8479
C8480
C8481
C8482
C8483
C8484
C8485
C8486
C8487
C8488
C8489
C8490
C8491
C8492
C8493
C8494
C8495
C8496
C8497
C8498
C8499
C8500
C8501
C8502
C8503
C8504
C8505
C8506
C8507
C8508
C8509
C8510
C8511
C8512
C8513
C8514
C8515
C8516
C8517
C8518
C8519
C8520
C8521
C8522
C8523
C8524
C8525
C8526
C8527
C8528
C8529
C8530
C8531
C8532
C8533
C8534
C8535
C8536
C8537
C8538
C8539
C8540
C8541
C8542
C8543
C8544
C8545
C8546
C8547
C8548
C8549
C8550
C8551
C8552
C8553
C8554
C8555
C8556
C8557
C8558
C8559
C8560
C8561
C8562
C8563
C8564
C8565
C8566
C8567
C8568
C8569
C8570
C8571
C8572
C8573
C8574
C8575
C8576
C8577
C8578
C8579
C8580
C8581
C8582
C8583
C8584
C8585
C8586
C8587
C8588
C8589
C8590
C8591
C8592
C8593
C8594
C8595
C8596
C8597
C8598
C8599
C8600
C8601
C8602
C8603
C8604
C8605
C8606
C8607
C8608
C8609
C8610
C8611
C8612
C8613
C8614
C8615
C8616
C8617
C8618
C8619
C8620
C8621
C8622
C8623
C8624
C8625
C8626
C8627
C8628
C8629
C8630
C8631
C8632
C8633
C8634
C8635
C8636
C8637
C8638
C8639
C8640
C8641
C8642
C8643
C8644
C8645
C8646
C8647
C8648
C8649
C8650
C8651
C8652
C8653
C8654
C8655
C8656
C8657
C8658
C8659
C8660
C8661
C8662
C8663
C8664
C8665
C8666
C8667
C8668
C8669
C8670
C8671
C8672
C8673
C8674
C8675
C8676
C8677
C8678
C8679
C8680
C8681
C8682
C8683
C8684
C8685
C8686
C8687
C8688
C8689
C8690
C8691
C8692
C8693
C8694
C8695
C8696
C8697
C8698
C8699
C8700
C8701
C8702
C8703
C8704
C8705
C8706
C8707
C8708
C8709
C8710
C8711
C8712
C8713
C8714
C8715
C8716
C8717
C8718
C8719
C8720
C8721
C8722
C8723
C8724
C8725
C8726
C8727
C8728
C8729
C8730
C8731
C8732
C8733
C8734
C8735
C8736
C8737
C8738
C8739
C8740
C8741
C8742
C8743
C8744
C8745
C8746
C8747
C8748
C8749
C8750
C8751
C8752
C8753
C8754
C8755
C8756
C8757
C8758
C8759
C8760
C8761
C8762
C8763
C8764
C8765
C8766
C8767
C8768
C8769
C8770
C8771
C8772
C8773
C8774
C8775
C8776
C8777
C8778
C8779
C8780
C8781
C8782
C8783
C8784
C8785
C8786
C8787
C8788
C8789
C8790
C8791
C8792
C8793
C8794
C8795
C8796
C8797
C8798
C8799
C8800
C8801
C8802
C8803
C8804
C8805
C8806
C8807
C8808
C8809
C8810
C8811
C8812
C8813
C8814
C8815
C8816
C8817
C8818
C8819
C8820
C8821
C8822
C8823
C8824
C8825
C8826
C8827
C8828
C8829
C8830
C8831
C8832
C8833
C8834
C8835
C8836
C8837
C8838
C8839
C8840
C8841
C8842
C8843
C8844
C8845
C8846
C8847
C8848
C8849
C8850
C8851
C8852
C8853
C8854
C8855
C8856
C8857
C8858
C8859
C8860
C8861
C8862
C8863
C8864
C8865
C8866
C8867
C8868
C8869
C8870
C8871
C8872
C8873
C8874
C8875
C8876
C8877
C8878
C8879
C8880
C8881
C8882
C8883
C8884
C8885
C8886
C8887
C8888
C8889
C8890
C8891
C8892
C8893
C8894
C8895
C8896
C8897
C8898
C8899
C8900
C8901
C8902
C8903
C8904
C8905
C8906
C8907
C8908
C8909
C8910
C8911
C8912
C8913
C8914
C8915
C8916
C8917
C8918
C8919
C8920
C8921
C8922
C8923
C8924
C8925
C8926
C8927
C8928
C8929
C8930
C8931
C8932
C8933
C8934
C8935
C8936
C8937
C8938
C8939
C8940
C8941
C8942
C8943
C8944
C8945
C8946
C8947
C8948
C8949
C8950
C8951
C8952
C8953
C8954
C8955
C8956
C8957
C8958
C8959
C8960
C8961
C8962
C8963
C8964
C8965
C8966
C8967
C8968
C8969
C8970
C8971
C8972
C8973
C8974
C8975
C8976
C8977
C8978
C8979
C8980
C8981
C8982
C8983
C8984
C8985
C8986
C8987
C8988
C8989
C8990
C8991
C8992
C8993
C8994
C8995
C8996
C8997
C8998
C8999
C9000
C9001
C9002
C9003
C9004
C9005
C9006
C9007
C9008
C9009
C9010
C9011
C9012
C9013
C9014
C9015
C9016
C9017
C9018
C9019
C9020
C9021
C9022
C9023
C9024
C9025
C9026
C9027
C9028
C9029
C9030
C9031
C9032
C9033
C9034
C9035
C9036
C9037
C9038
C9039
C9040
C9041
C9042
C9043
C9044
C9045
C9046
C9047
C9048
C9049
C9050
C9051
C9052
C9053
C9054
C9055
C9056
C9057
C9058
C9059
C9060
C9061
C9062
C9063
C9064
C9065
C9066
C9067
C9068
C9069
C9070
C9071
C9072
C9073
C9074
C9075
C9076
C9077
C9078
C9079
C9080
C9081
C9082
C9083
C9084
C9085
C9086
C9087
C9088
C9089
C9090
C9091
C9092
C9093
C9094
C9095
C9096
C9097
C9098
C9099
C9100
C9101
C9102
C9103
C9104
C9105
C9106
C9107
C9108
C9109
C9110
C9111
C9112
C9113
C9114
C9115
C9116
C9117
C9118
C9119
C9120
C9121
C9122
C9123
C9124
C9125
C9126
C9127
C9128
C9129
C9130
C9131
C9132
C9133
C9134
C9135
C9136
C9137
C9138
C9139
C9140
C9141
C9142
C9143
C9144
C9145
C9146
C9147
C9148
C9149
C9150
C9151
C9152
C9153
C9154
C9155
C9156
C9157
C9158
C9159
C9160
C9161
C9162
C9163
C9164
C9165
C9166
C9167
C9168
C9169
C9170
C9171
C9172
C9173
C9174
C9175
C9176
C9177
C9178
C9179
C9180
C9181
C9182
C9183
C9184
C9185
C9186
C9187
C9188
C9189
C9190
C9191
C9192
C9193
C9194
C9195
C9196
C9197
C9198
C9199
C9200
C9201
C9202
C9203
C9204
C9205
C9206
C9207
C9208
C9209
C9210
C9211
C9212
C9213
C9214
C9215
C9216
C9217
C9218
C9219
C9220
C9221
C9222
C9223
C9224
C9225
C9226
C9227
C9228
C9229
C9230
C9231
C9232
C9233
C9234
C9235
C9236
C9237
C9238
C9239
C9240
C9241
C9242
C9243
C9244
C9245
C9246
C9247
C9248
C9249
C9250
C9251
C9252
C9253
C9254
C9255
C9256
C9257
C9258
C9259
C9260
C9261
C9262
C9263
C9264
C9265
C9266
C9267
C9268
C9269
C9270
C9271
C9272
C9273
C9274
C9275
C9276
C9277
C9278
C9279
C9280
C9281
C9282
C9283
C9284
C9285
C9286
C9287
C9288
C9289
C9290
C9291
C9292
C9293
C9294
C9295
C9296
C9297
C9298
C9299
C9300
C9301
C9302
C9303
C9304
C9305
C9306
C9307
C9308
C9309
C9310
C9311
C9312
C9313
C9314
C9315
C9316
C9317
C9318
C9319
C9320
C9321
C9322
C9323
C9324
C9325
C9326
C9327
C9328
C9329
C9330
C9331
C9332
C9333
C9334
C9335
C9336
C9337
C9338
C9339
C9340
C9341
C9342
C9343
C9344
C9345
C9346
C9347
C9348
C9349
C9350
C9351
C9352
C9353
C9354
C9355
C9356
C9357
C9358
C9359
C9360
C9361
C9362
C9363
C9364
C9365
C9366
C9367
C9368
C9369
C9370
C9371
C9372
C9373
C9374
C9375
C9376
C9377
C9378
C9379
C9380
C9381
C9382
C9383
C9384
C9385
C9386
C9387
C9388
C9389
C9390
C9391
C9392
C9393
C9394
C9395
C9396
C9397
C9398
C9399
C9400
C9401
C9402
C9403
C9404
C9405
C9406
C9407
C9408
C9409
C9410
C9411
C9412
C9413
C9414
C9415
C9416
C9417
C9418
C9419
C9420
C9421
C9422
C9423
C9424
C9425
C9426
C9427
C9428
C9429
C9430
C9431
C9432
C9433
C9434
C9435
C9436
C9437
C9438
C9439
C9440
C9441
C9442
C9443
C9444
C9445
C9446
C9447
C9448
C9449
C9450
C9451
C9452
C9453
C9454
C9455
C9456
C9457
C9458
C9459
C9460
C9461
C9462
C9463
C9464
C9465
C9466
C9467
C9468
C9469
C9470
C9471
C9472
C9473
C9474
C9475
C9476
C9477
C9478
C9479
C9480
C9481
C9482
C9483
C9484
C9485
C9486
C9487
C9488
C9489
C9490
C9491
C9492
C9493
C9494
C9495
C9496
C9497
C9498
C9499
C9500
C9501
C9502
C9503
C9504
C9505
C9506
C9507
C9508
C9509
C9510
C9511
C9512
C9513
C9514
C9515
C9516
C9517
C9518
C9519
C9520
C9521
C9522
C9523
C9524
C9525
C9526
C9527
C9528
C9529
C9530
C9531
C9532
C9533
C9534
C9535
C9536
C9537
C9538
C9539
C9540
C9541
C9542
C9543
C9544
C9545
C9546
C9547
C9548
C9549
C9550
C9551
C9552
C9553
C9554
C9555
C9556
C9557
C9558
C9559
C9560
C9561
C9562
C9563
C9564
C9565
C9566
C9567
C9568
C9569
C9570
C9571
C9572
C9573
C9574
C9575
C9576
C9577
C9578
C9579
C9580
C9581
C9582
C9583
C9584
C9585
C9586
C9587
C9588
C9589
C9590
C9591
C9592
C9593
C9594
C9595
C9596
C9597
C9598
C9599
C9600
C9601
C9602
C9603
C9604
C9605
C9606
C9607
C9608
C9609
C9610
C9611
C9612
C9613
C9614
C9615
C9616
C9617
C9618
C9619
C9620
C9621
C9622
C9623
C9624
C9625
C9626
C9627
C9628
C9629
C9630
C9631
C9632
C9633
C9634
C9635
C9636
C9637
C9638
C9639
C9640
C9641
C9642
C9643
C9644
C9645
C9646
C9647
C9648
C9649
C9650
C9651
C9652
C9653
C9654
C9655
C9656
C9657
C9658
C9659
C9660
C9661
C9662
C9663
C9664
C9665
C9666
C9667
C9668
C9669
C9670
C9671
C9672
C9673
C9674
C9675
C9676
C9677
C9678
C9679
C9680
C9681
C9682
C9683
C9684
C9685
C9686
C9687
C9688
C9689
C9690
C9691
C9692
C9693
C9694
C9695
C9696
C9697
C9698
C9699
C9700
C9701
C9702
C9703
C9704
C9705
C9706
C9707
C9708
C9709
C9710
C9711
C9712
C9713
C9714
C9715
C9716
C9717
C9718
C9719
C9720
C9721
C9722
C9723
C9724
C9725
C9726
C9727
C9728
C9729
C9730
C9731
C9732
C9733
C9734
C9735
C9736
C9737
C9738
C9739
C9740
C9741
C9742
C9743
C9744
C9745
C9746
C9747
C9748
C9749
C9750
C9751
C9752
C9753
C9754
C9755
C9756
C9757
C9758
C9759
C9760
C9761
C9762
C9763
C9764
C9765
C9766
C9767
C9768
C9769
C9770
C9771
C9772
C9773
C9774
C9775
C9776
C9777
C9778
C9779
C9780
C9781
C9782
C9783
C9784
C9785
C9786
C9787
C9788
C9789
C9790
C9791
C9792
C9793
C9794
C9795
C9796
C9797
C9798
C9799
C9800
C9801
C9802
C9803
C9804
C9805
C9806
C9807
C9808
C9809
C9810
C9811
C9812
C9813
C9814
C9815
C9816
C9817
C9818
C9819
C9820
C9821
C9822
C9823
C9824
C9825
C9826
C9827
C9828
C9829
C9830
C9831
C9832
C9833
C9834
C9835
C9836
C9837
C9838
C9839
C9840
C9841
C9842
C9843
C9844
C9845
C9846
C9847
C9848
C9849
C9850
C9851
C9852
C9853
C9854
C9855
C9856
C9857
C9858
C9859
C9860
C9861
C9862
C9863
C9864
C9865
C9866
C9867
C9868
C9869
C9870
C9871
C9872
C9873
C9874
C9875
C9876
C9877
C9878
C9879
C9880
C9881
C9882
C9883
C9884
C9885
C9886
C9887
C9888
C9889
C9890
C9891
C9892
C9893
C9894
C9895
C9896
C9897
C9898
C9899
C9900
C9901
C9902
C9903
C9904
C9905
C9906
C9907
C9908
C9909
C9910
C9911
C9912
C9913
C9914
C9915
C9916
C9917
C9918
C9919
C9920
C9921
C9922
C9923
C9924
C9925
C9926
C9927
C9928
C9929
C9930
C9931
C9932
C9933
C9934
C9935
C9936
C9937
C9938
C9939
C9940
C9941
C9942
C9943
C9944
C9945
C9946
C9947
C9948
C9949
C9950
C9951
C9952
C9953
C9954
C9955
C9956
C9957
C9958
C9959
C9960
C9961
C9962
C9963
C9964
C9965
C9966
C9967
C9968
C9969
C9970
C9971
C9972
C9973
C9974
C9975
C9976
C9977
C9978
C9979
C9980
C9981
C9982
C9983
C9984
C9985
C9986
C9987
C9988
C9989
C9990
C9991
C9992
C9993
C9994
C9995
C9996
C9997
C9998
C9999
C10000

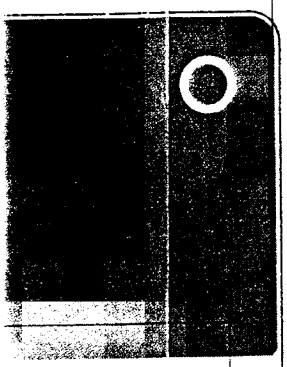

L6407

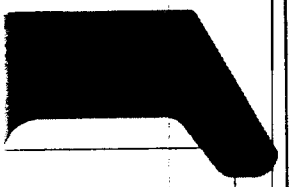

L6406

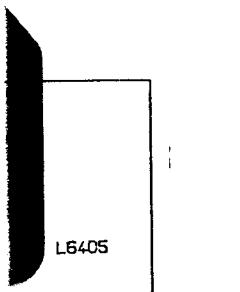

L6405

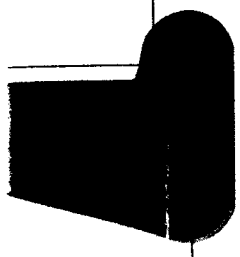

L6404

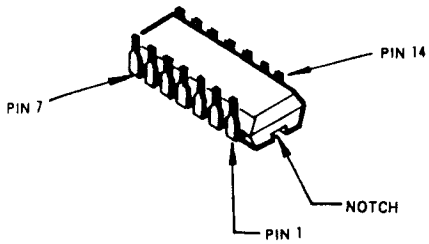

HD74HC00P
(Q6409)
HD74HC74P
(Q6410)
MC14071BCP
(Q6411)

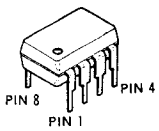

MB3763
(Q6402, 6403)
μPC393C
(Q6404)

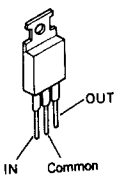

HA17808P
(Q6401)

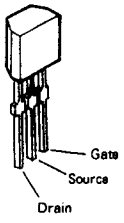

2SK104J
(Q6405, 6406)

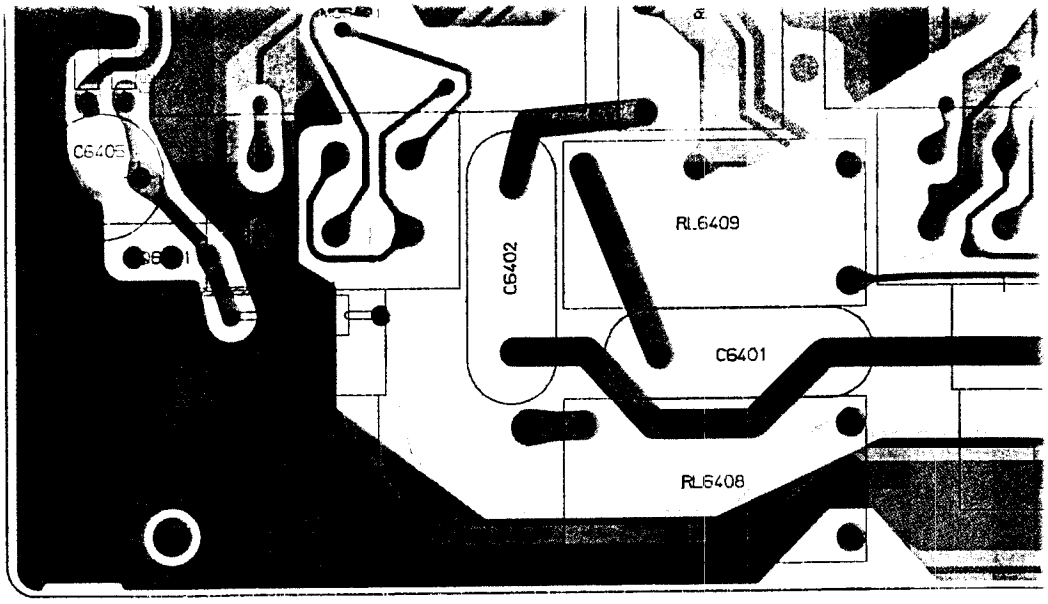
C6405
C6402
RL6409
C6401
RL6408

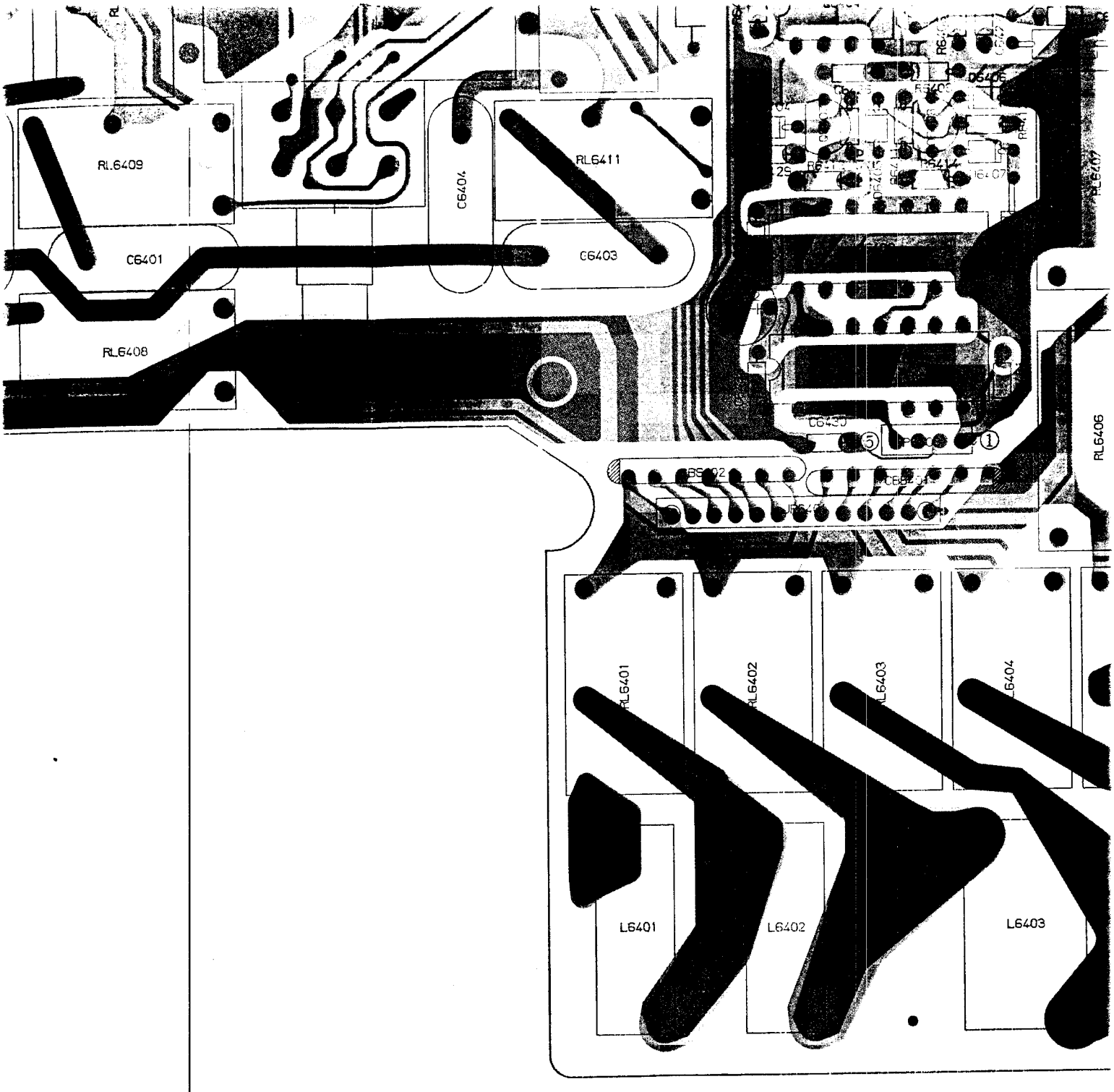
RL6409
C6404
RL6411
C6401
C6403
RL6408
C6430
RL6406
RL6401
RL6402
RL6403
L6404
L6401
L6402
L6403

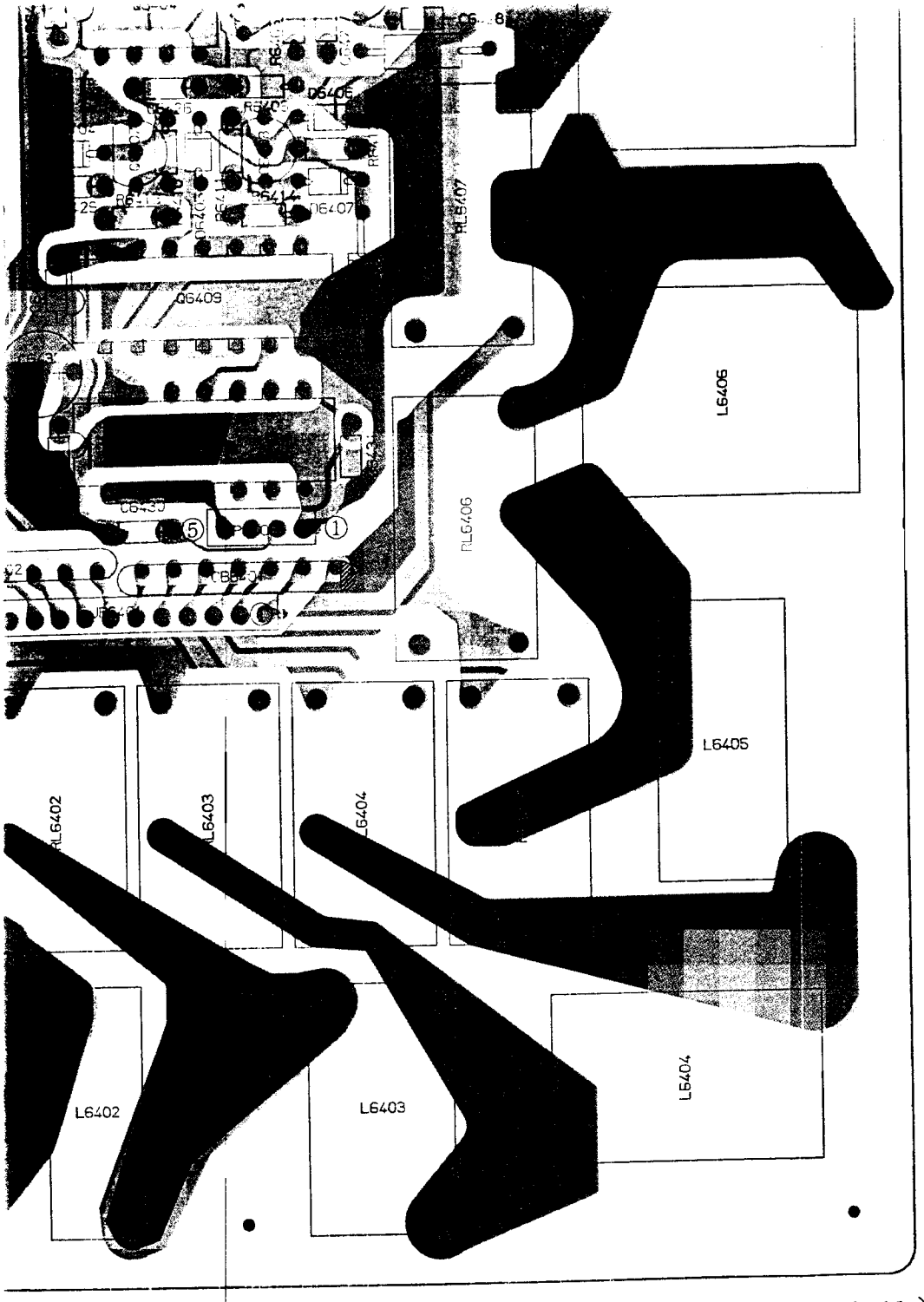

("component" side)

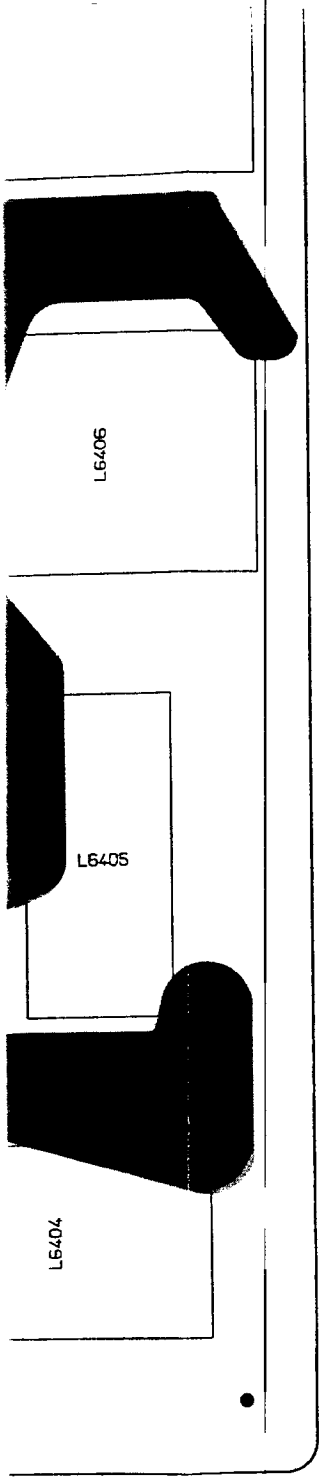

("component" side)

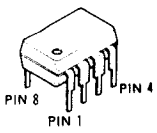

MB3763
(Q6402, 6403)
μPC393C
(Q6404)

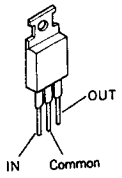

HA17808P
(Q6401)

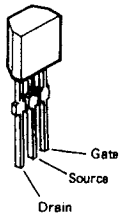

2SK104J
(Q6405, 6406)

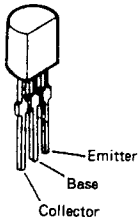

2SC2901L
(Q6407, 6408)

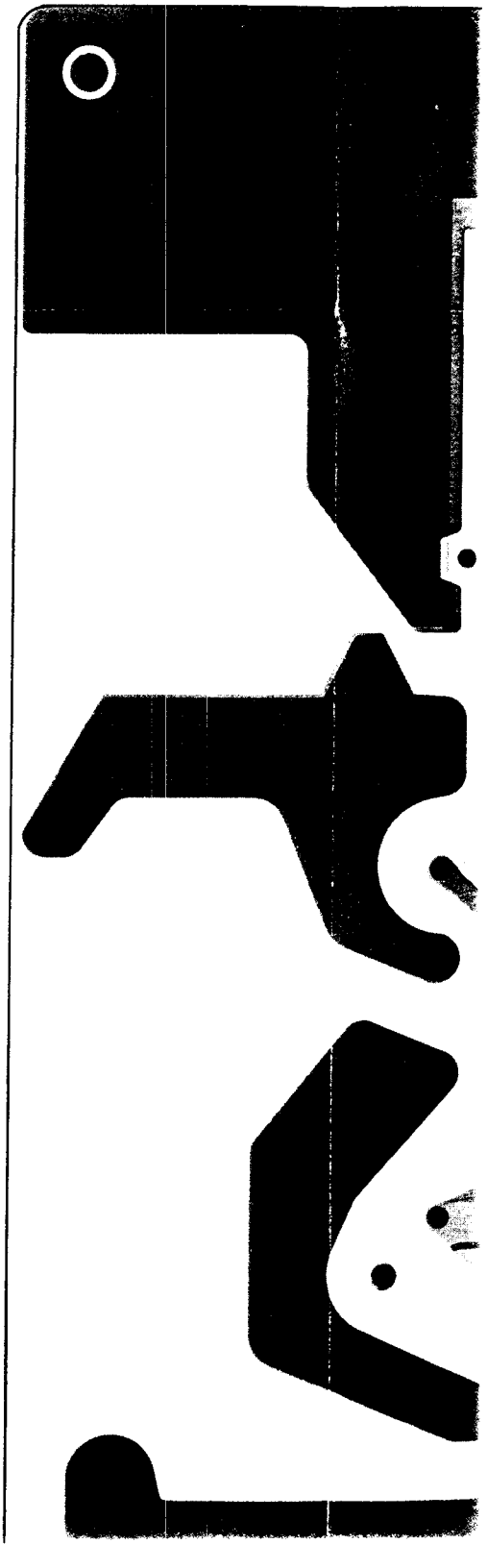

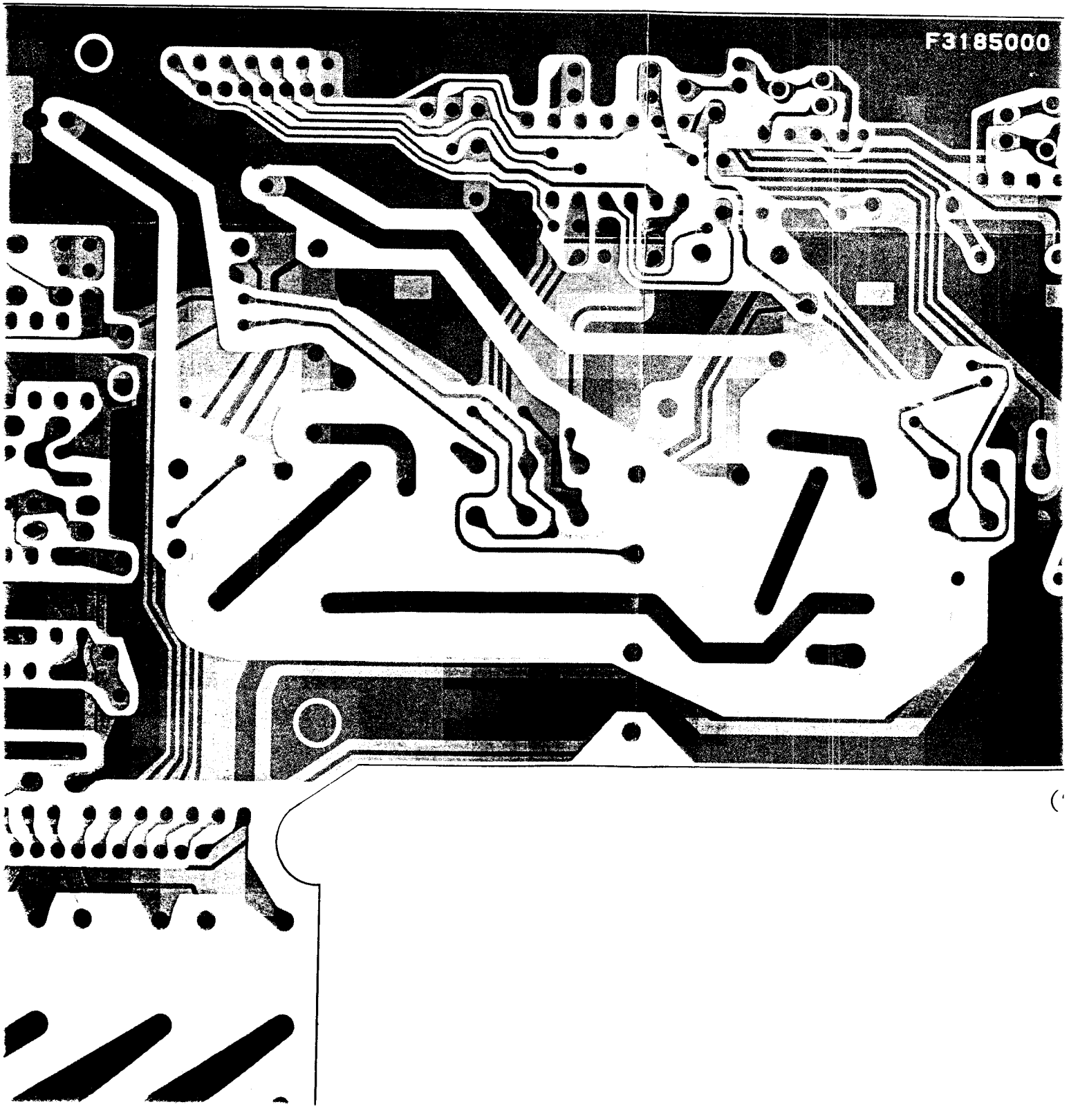
F3185000

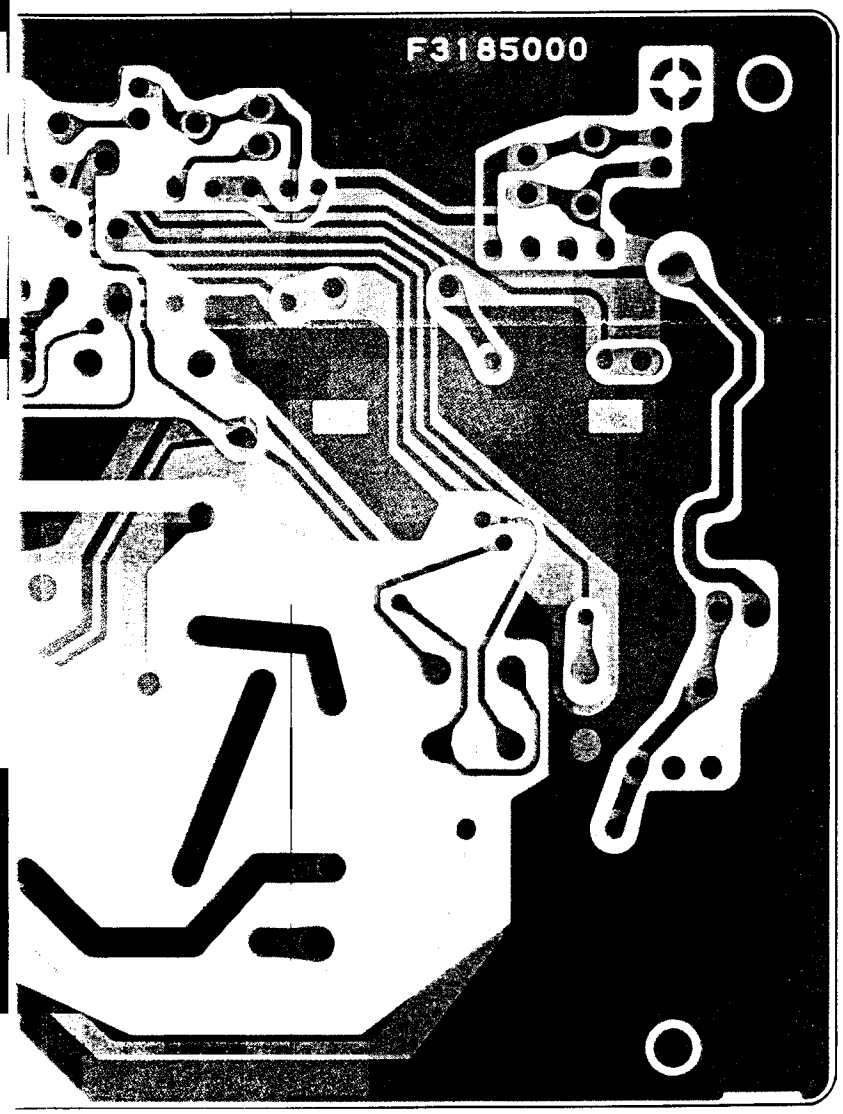

("solder" side)

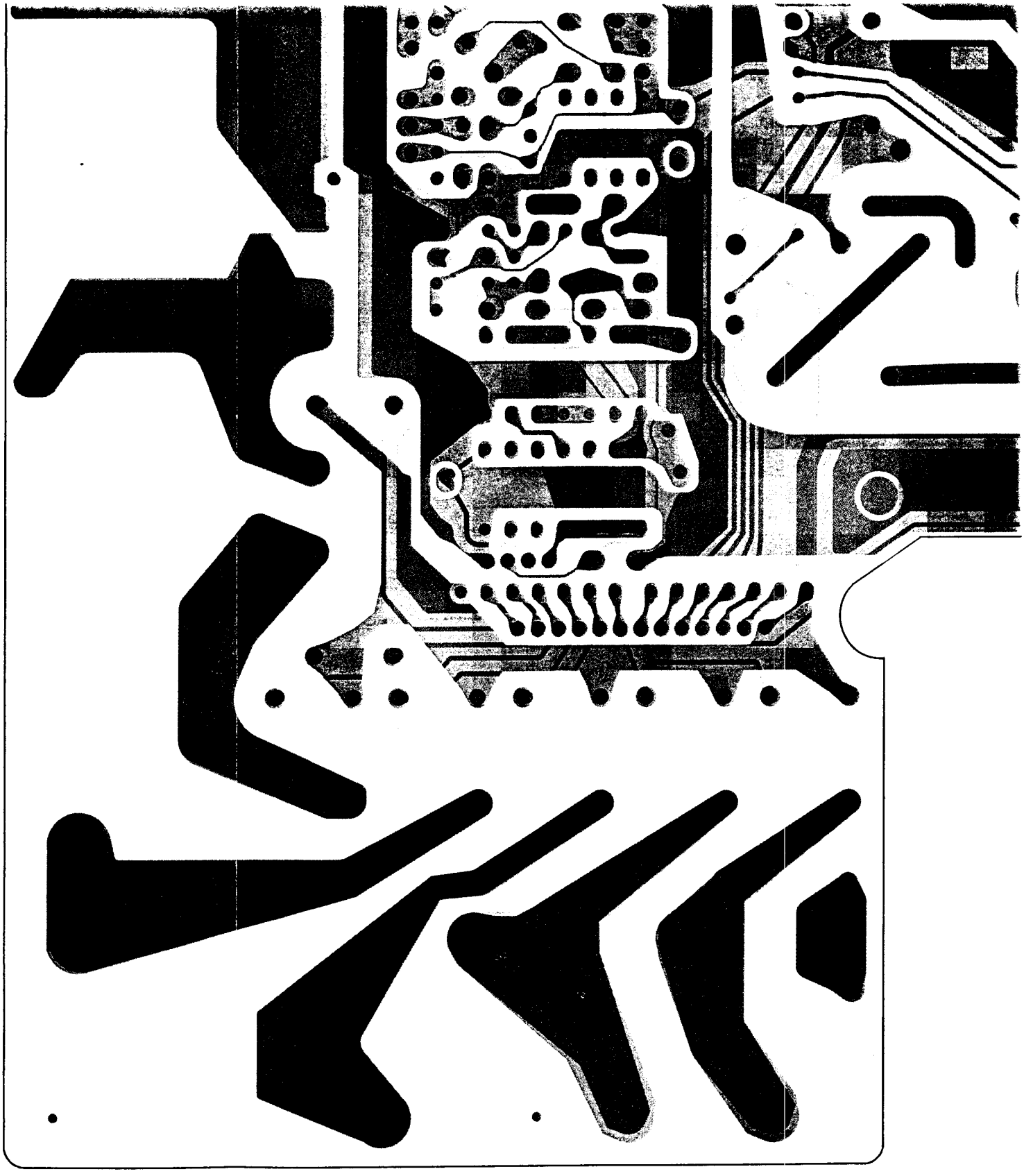

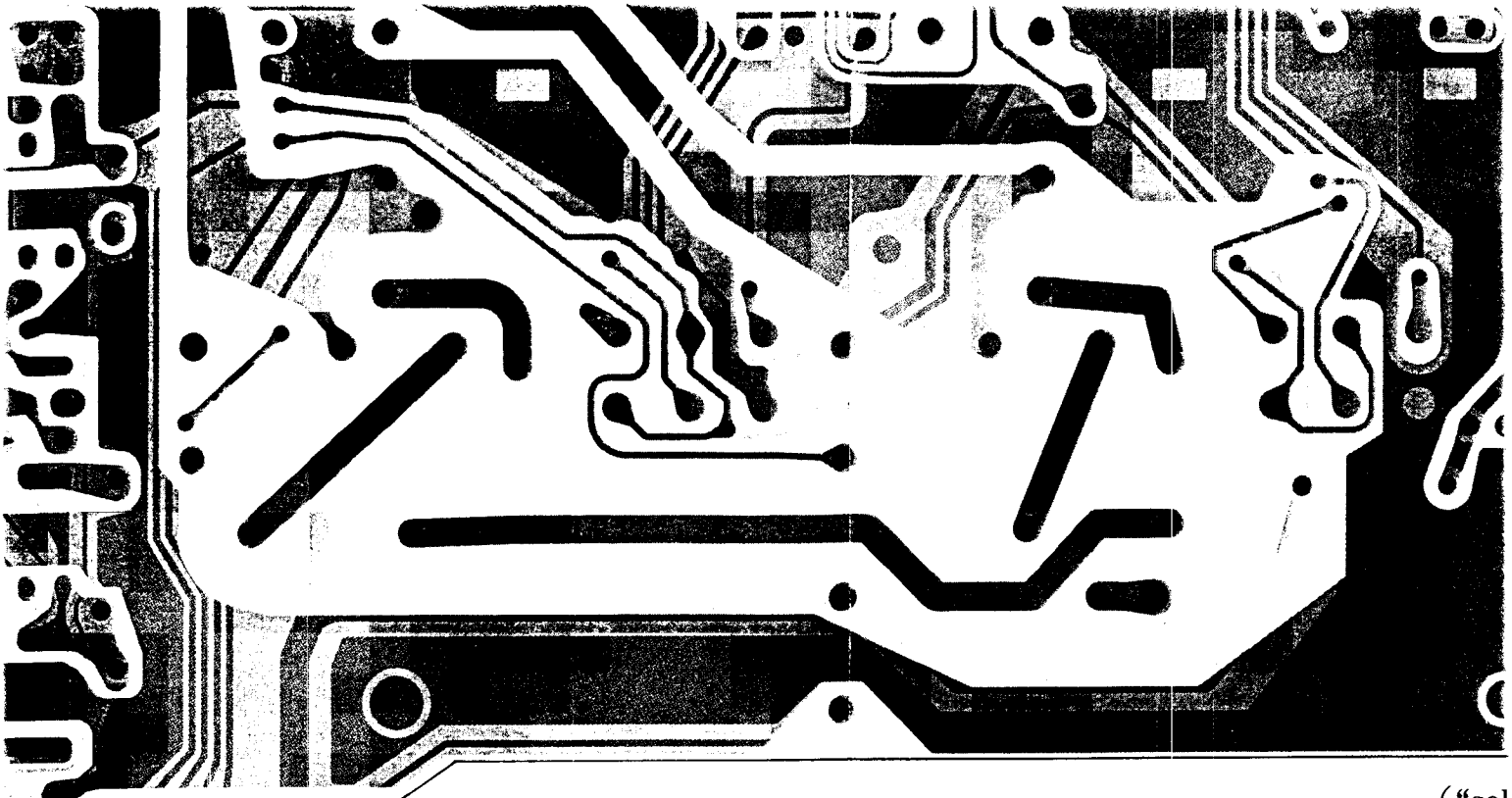

("sol

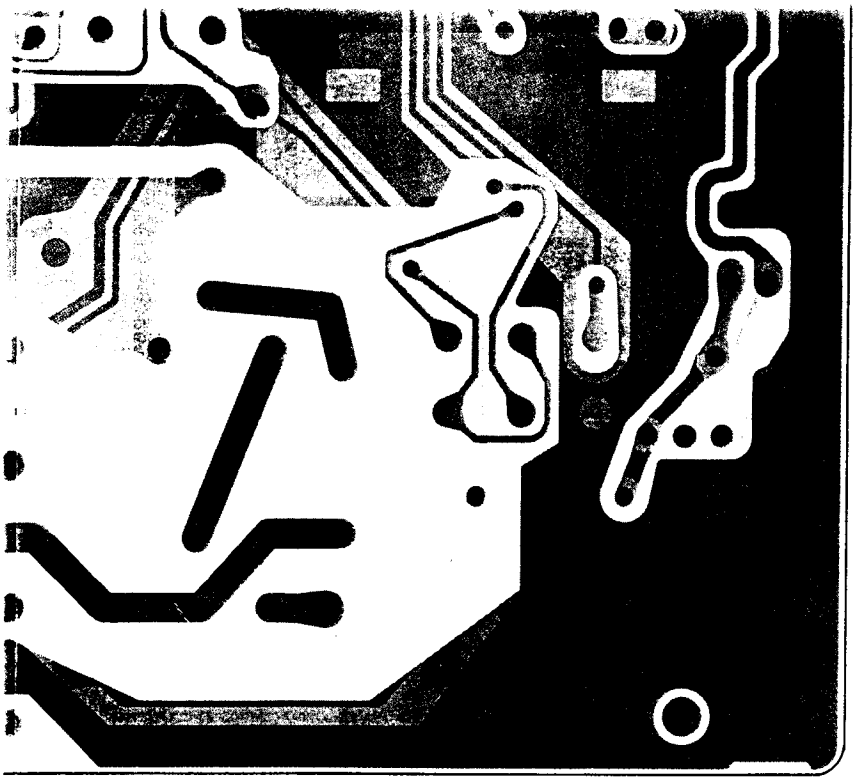

("solder" side)

REF.	YAESU P/N	DESCRIPTION	MFGR'S DESIG	VALUE	WV	TOL.	VERS.
		*** TUNER MAIN UNIT ***					
	CA0232001	P.C.B. W COMP.					
	F3185000	P.C.B. W/O COMP.					
C 6401	K30355201	MICA CAP	DML4 201J30	200pF	3KV		
C 6402	K30355401	MICA CAP	DML4 401J30	400pF	3KV		
C 6403	K30355201	MICA CAP	DML4 201J30	200pF	3KV		
C 6404	K30355401	MICA CAP	DML4 401J30	400pF	3KV		
C 6405	K46120002	AL. ELECTRO. CAP.	16V331M8X11TR5	330uF	16V		
C 6406	K28179002	CERAMIC CAP.	UP050F473Z-A-B	0.047uF	50V	F	
C 6407	K28179002	CERAMIC CAP.	UP050F473Z-A-B	0.047uF	50V	F	
C 6408	K46120002	AL. ELECTRO. CAP.	16V331M8X11TR5	330uF	16V		
C 6409	K28129001	CERAMIC CAP.	EP050Y103N-A	0.01uF	16V	Y	
C 6410	K28129001	CERAMIC CAP.	EP050Y103N-A	0.01uF	16V	Y	
C 6411	K28129001	CERAMIC CAP.	EP050Y103N-A	0.01uF	16V	Y	
C 6412	K28129001	CERAMIC CAP.	EP050Y103N-A	0.01uF	16V	Y	
C 6413	K28179002	CERAMIC CAP.	UP050F473Z-A-B	0.047uF	50V	F	
C 6414	K28179002	CERAMIC CAP.	UP050F473Z-A-B	0.047uF	50V	F	
C 6415	K46120004	AL. ELECTRO. CAP.	16V100M4X7TR2	10uF	16V		
C 6416	K46120004	AL. ELECTRO. CAP.	16V100M4X7TR2	10uF	16V		
C 6417	K28179002	CERAMIC CAP.	UP050F473Z-A-B	0.047uF	50V	F	
C 6418	K28179002	CERAMIC CAP.	UP050F473Z-A-B	0.047uF	50V	F	
C 6419	K46120004	AL. ELECTRO. CAP.	16V100M4X7TR2	10uF	16V		
C 6420	K46120004	AL. ELECTRO. CAP.	16V100M4X7TR2	10uF	16V		
C 6421	K28129001	CERAMIC CAP.	EP050Y103N-A	0.01uF	16V	Y	
C 6422	K26171224	CERAMIC CAP.	DD109-979UJ221J50	220pF	50V	UJ	
C 6423	K28129001	CERAMIC CAP.	EP050Y103N-A	0.01uF	16V	Y	
C 6424	K28129001	CERAMIC CAP.	EP050Y103N-A	0.01uF	16V	Y	
C 6425	K28129001	CERAMIC CAP.	EP050Y103N-A	0.01uF	16V	Y	
C 6426	K28129001	CERAMIC CAP.	EP050Y103N-A	0.01uF	16V	Y	
C 6427	K28129001	CERAMIC CAP.	EP050Y103N-A	0.01uF	16V	Y	
C 6428	K28129001	CERAMIC CAP.	EP050Y103N-A	0.01uF	16V	Y	
C 6429	K28129001	CERAMIC CAP.	EP050Y103N-A	0.01uF	16V	Y	
C 6430	K28129001	CERAMIC CAP.	EP050Y103N-A	0.01uF	16V	Y	
C 6431	K28129001	CERAMIC CAP.	EP050Y103N-A	0.01uF	16V	Y	
C 6432	K46140005	AL. ELECTRO. CAP.	25V101M6X11TR5	100uF	25V		
C 6433	K28129001	CERAMIC CAP.	EP050Y103N-A	0.01uF	16V	Y	
C 6434	K28129001	CERAMIC CAP.	EP050Y103N-A	0.01uF	16V	Y	
C 6435	K28129001	CERAMIC CAP.	EP050Y103N-A	0.01uF	16V	Y	
C 6436	K28129001	CERAMIC CAP.	EP050Y103N-A	0.01uF	16V	Y	
C 6437	K28129001	CERAMIC CAP.	EP050Y103N-A	0.01uF	16V	Y	
C 6438	K28129001	CERAMIC CAP.	EP050Y103N-A	0.01uF	16V	Y	
C 6439	K28129001	CERAMIC CAP.	EP050Y103N-A	0.01uF	16V	Y	
C 6440	K28129001	CERAMIC CAP.	EP050Y103N-A	0.01uF	16V	Y	
C 6441	K28129001	CERAMIC CAP.	EP050Y103N-A	0.01uF	16V	Y	
CB6401	K80000002	CAPACITOR BLOCK	CAYF1036Z50				
CB6402	K80000002	CAPACITOR BLOCK	CAYF1036Z50				
CB6403	K80000002	CAPACITOR BLOCK	CAYF1036Z50				
D 6401	Q9000371	SURGE ABSORBER	DSA-301LA				
D 6402	G2090223	DIODE	1SS101				
D 6403	G2090223	DIODE	1SS101				

Tuner Main Unit

REF.	YAESU P/N	DESCRIPTION	MFGR'S DESIG	VALUE	WV	TOL.	VERS.
D 6404	G2090408	DIODE	1SS270				
D 6405	G2090408	DIODE	1SS270				
D 6406	G2090408	DIODE	1SS270				
D 6407	G2090408	DIODE	1SS270				
D 6408	G2090266	DIODE	RD3.9EB2				
J 6401	P1090210	CONNECTOR	TMP-J01X-V6				
J 6402	P1090210	CONNECTOR	TMP-J01X-V6				
JP6401	T9206041A	WIRE-ASSY					
JP6402	T9206042	WIRE-ASSY					
JP6403	T9206043A	WIRE-ASSY					
JP6404	T9206076	WIRE-ASSY					
JP6405	T9206076	WIRE-ASSY					
L 6401	L0021949	COIL	2.5T15D2.0PVF R				
L 6402	L0021949	COIL	2.5T15D2.0PVF R				
L 6403	L0021950	COIL	4.5T15D2.0PVF R				
L 6404	L0022064	COIL	6.5T19D2.0PVF R				
L 6405	L0022049	COIL	7.5T20D1.2UEW R				
L 6406	L0022048	COIL	12.5T20D1.2UEW R				
L 6407	L0022047	COIL	20.5T20D1.2UEW R				
L 6408	L1190218	M.RFC	LAL03NA101K	100uH			
L 6409	L0021955	COIL	U 2001F FR9.5				
L 6410	L1190040	M.RFC	S4-102	1mH			
L 6411	L1190218	M.RFC	LAL03NA101K	100uH			
MO6401	Q9000526	MOTOR POT.	RK16312M0	50K		B	
MO6402	Q9000526	MOTOR POT.	RK16312M0	50K		B	
Q 6401	G1090938	IC	HA17808P				
Q 6402	G1091004	IC	MB3763				
Q 6403	G1091004	IC	MB3763				
Q 6404	G1090536	IC	UPC393C				
Q 6405	G3801040J	FET	2SK104J				
Q 6406	G3801040J	FET	2SK104J				
Q 6407	G3329010L	TRANSISTOR	2SC2901L				
Q 6408	G3329010L	TRANSISTOR	2SC2901L				
Q 6409	G1091007	IC	HD74HC00P				
Q 6410	G1091006	IC	HD74HC74P				
Q 6411	G1090029	IC	MC14071BCP				
R 6401	J00275240	CARBON FILM RES.	RD12VJ240	24	1/2W		
R 6402	J07225103	CARBON FILM RES.	RD16TPJ103	10K	1/6W		
R 6403	J07225103	CARBON FILM RES.	RD16TPJ103	10K	1/6W		
R 6404	J07225103	CARBON FILM RES.	RD16TPJ103	10K	1/6W		
R 6405	J07225103	CARBON FILM RES.	RD16TPJ103	10K	1/6W		
R 6406	J07225104	CARBON FILM RES.	RD16TPJ104	100K	1/6W		
R 6407	J07225104	CARBON FILM RES.	RD16TPJ104	100K	1/6W		
R 6408	J07225152	CARBON FILM RES.	RD16TPJ152	1.5K	1/6W		
R 6409	J07225152	CARBON FILM RES.	RD16TPJ152	1.5K	1/6W		
R 6410	J07225333	CARBON FILM RES.	RD16TPJ333	33K	1/6W		
R 6411	J07225333	CARBON FILM RES.	RD16TPJ333	33K	1/6W		
R 6412	J07225102	CARBON FILM RES.	RD16TPJ102	1K	1/6W		
R 6413	J07225152	CARBON FILM RES.	RD16TPJ152	1.5K	1/6W		

REF.	YAESU P/N	DESCRIPTION	MFGR'S DESIG	VALUE	WV	TOL.	VERS.
R 6414	J07225152	CARBON FILM RES.	RD16TPJ152	1.5K	1/6W		
R 6415	J07225103	CARBON FILM RES.	RD16TPJ103	10K	1/6W		
R 6416	J07225104	CARBON FILM RES.	RD16TPJ104	100K	1/6W		
R 6417	J07225104	CARBON FILM RES.	RD16TPJ104	100K	1/6W		
R 6418	J07225104	CARBON FILM RES.	RD16TPJ104	100K	1/6W		
R 6419	J07225104	CARBON FILM RES.	RD16TPJ104	100K	1/6W		
R 6420	J07225102	CARBON FILM RES.	RD16TPJ102	1K	1/6W		
R 6421	J07225102	CARBON FILM RES.	RD16TPJ102	1K	1/6W		
R 6422	J07225102	CARBON FILM RES.	RD16TPJ102	1K	1/6W		
R 6423	J07225102	CARBON FILM RES.	RD16TPJ102	1K	1/6W		
RL6401	M1190075	RELAY	AGP2003		DC12V		
RL6402	M1190075	RELAY	AGP2003		DC12V		
RL6403	M1190075	RELAY	AGP2003		DC12V		
RL6404	M1190075	RELAY	AGP2003		DC12V		
RL6405	M1190075	RELAY	AGP2003		DC12V		
RL6406	M1190075	RELAY	AGP2003		DC12V		
RL6407	M1190075	RELAY	AGP2003		DC12V		
RL6408	M1190075	RELAY	AGP2003		DC12V		
RL6409	M1190075	RELAY	AGP2003		DC12V		
RL6410	M1190075	RELAY	AGP2003		DC12V		
RL6411	M1190075	RELAY	AGP2003		DC12V		
RL6412	M1190075	RELAY	AGP2003		DC12V		
TC6401	K91000012	TRIMMER CAP.	ECV1ZW10X32	10pF			
VC6401	K90000048	TRIMMER CAP.	YV-250-05	250pF			
VC6402	K90000048	TRIMMER CAP.	YV-250-05	250pF			
VR6401	J51783201	POT.	EVN-DXAA03B22	200			

Notes:

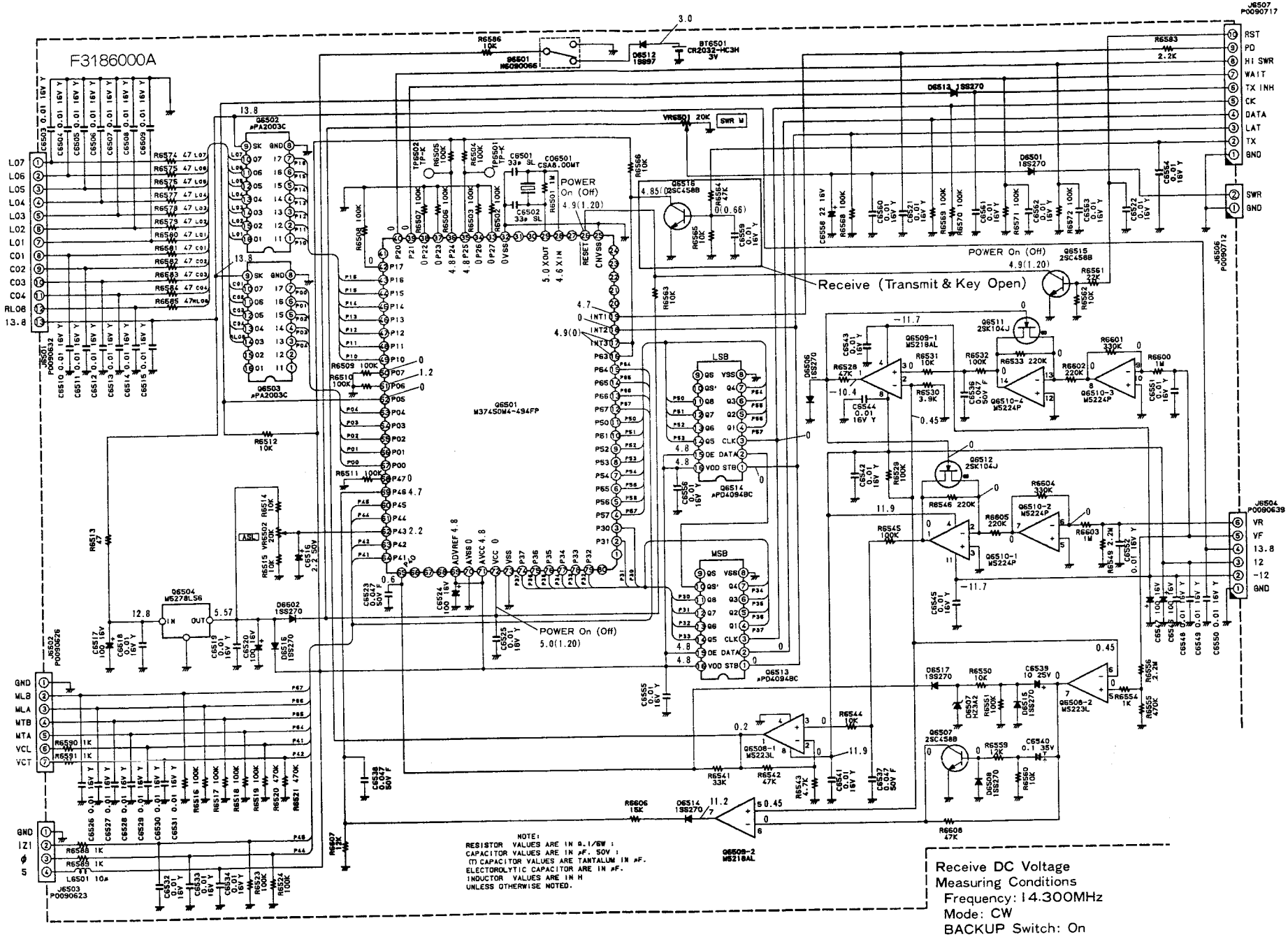
F3186000A
Q6501
M37450M4-494FP
Q6502
μPA2003C
Q6503
μPA2003C
Q6504
MS278LS6
Q6505
MS218AL
Q6506-1
MS218AL
Q6506-2
MS223L
Q6507
2SC4588
Q6508-1
MS223L
Q6508-2
MS218AL
Q6509-1
MS218AL
Q6510-1
MS224P
Q6510-2
MS224P
Q6510-3
MS224P
Q6510-4
MS224P
Q6511
2SK104J
Q6512
2SK104J
Q6513
μPD4094BC
Q6514
μPD4094BC
Q6515
2SC4588
Q6516
4.85(2SC4588
BT6501
CR2032-HC3H
3V
D6501
1SS270
D6502
1SS270
D6503
1SS270
D6504
1SS270
D6505
1SS270
D6506
1SS270
D6507
HZ3A2
D6508
1SS270
D6509
1SS270
D6510
1SS270
D6511
1SS270
D6512
1SS97
D6513
1SS270
D6514
1SS270
D6515
1SS270
D6516
1SS270
D6517
1SS270
LSB
MSB
POWER
On (Off)
4.9(1.20)
POWER On (Off)
4.9(1.20)
Receive (Transmit & Key Open)
POWER On (Off)
5.0(1.20)
J6501
P0090632
J6502
P0090626
J6503
P0090623
J6504
P0090639
J6506
P0090712
J6507
P0090717
L6501 10μ
RST
PD
HI SWR
WAIT
TX INH
CK
DATA
LAT
TX
GND
SWR
GND
VR
VF
13.8
12
-12
GND
L07
L06
L05
L04
L03
L02
L01
C01
C02
C03
C04
RL08
13.8
GND
MLB
MLA
MTB
MTA
VCL
VCT
GND
IZI
φ
S
NOTE:
RESISTOR VALUES ARE IN Ω. 1/6W :
CAPACITOR VALUES ARE IN μF. 50V :
(T) CAPACITOR VALUES ARE TANTALUM IN μF.
ELECTOROLYTIC CAPACITOR ARE IN μF.
INDUCTOR VALUES ARE IN H
UNLESS OTHERWISE NOTED.
Receive DC Voltage
Measuring Conditions
Frequency: 14.300MHz
Mode: CW
BACKUP Switch: On

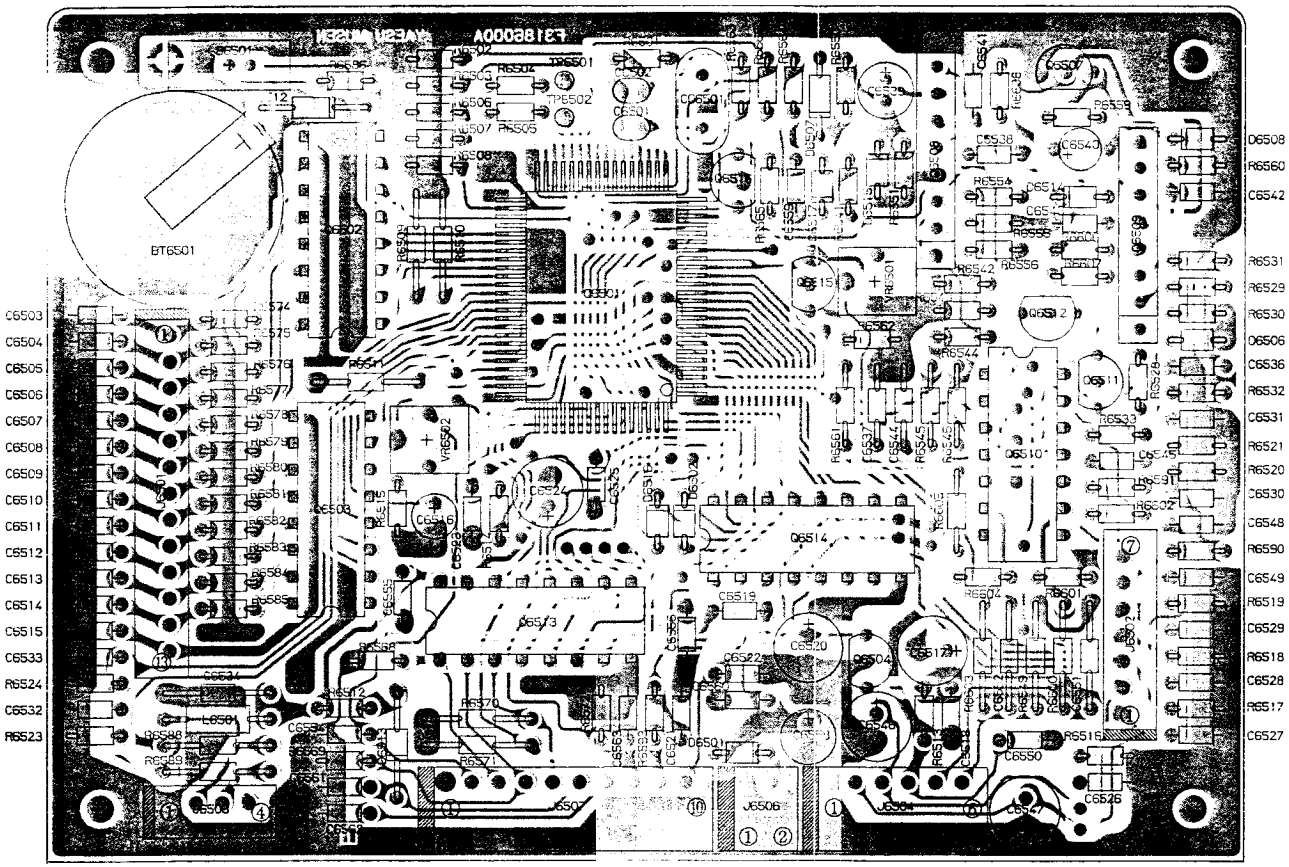

("component" side)

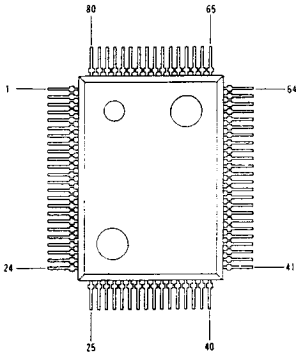

M37450M4-494FP
(Q6501)

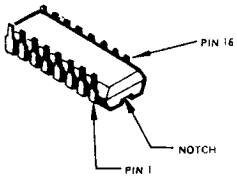

μPA2003C
(Q6502, 6503)
μPD4094BC
(Q6513, 6514)

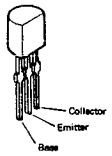

2SC458BTZ
(Q6507, 6515, 6516)

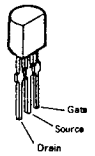

2SK104J
(Q6511, 6512)

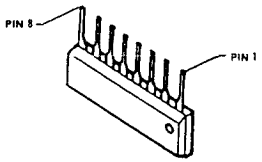

M5218AL
(Q6509)
M5223L
(Q6508)

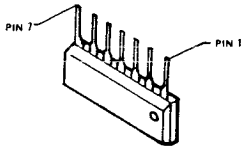

M5278L56
(Q6504)

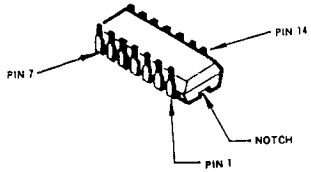

M5224P
(Q6510)

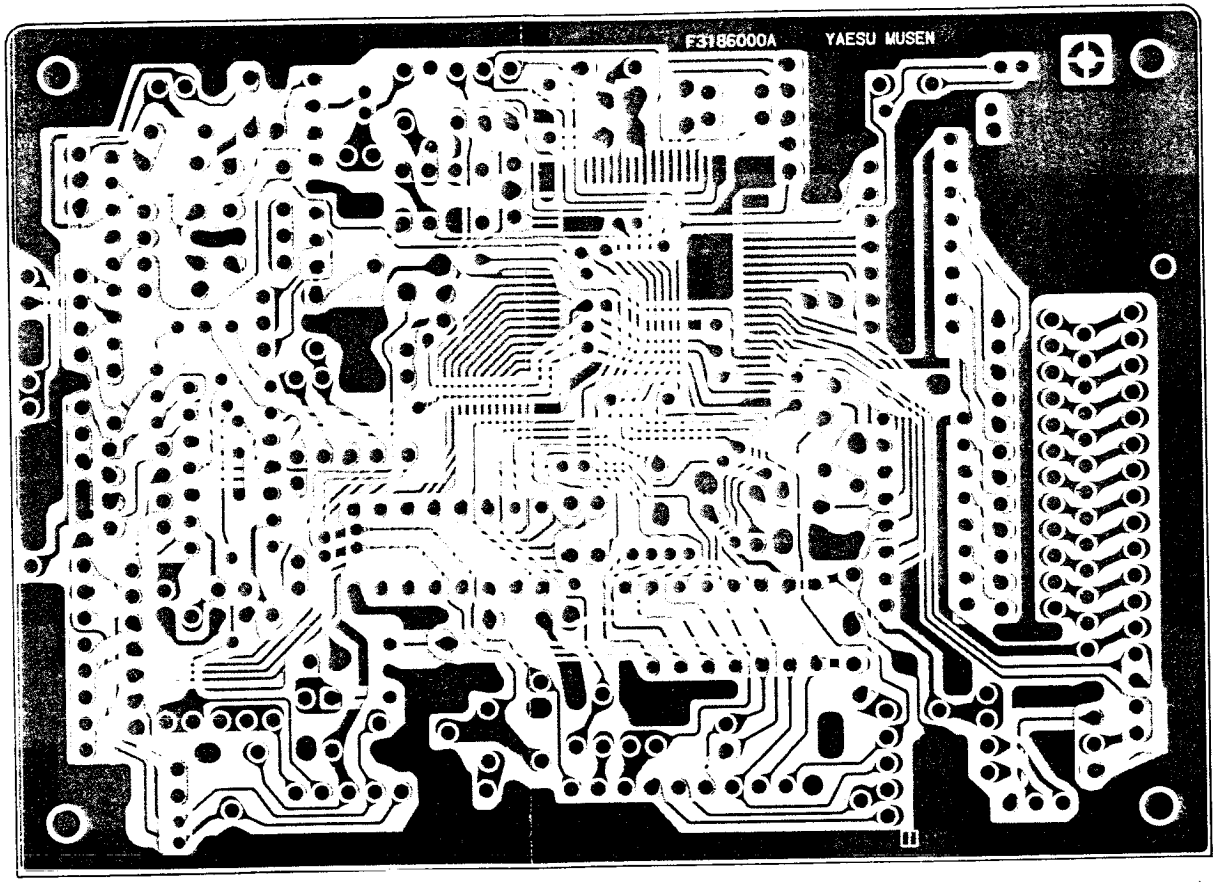

("solder" side)

REF.	YAESU P/N	DESCRIPTION	MFGR'S DESIG	VALUE	WV	TOL.	VERS.
		*** TUNER CNTL UNIT ***					
	CA0272101	P.C.B. W COMP.					
	F3186000A	P.C.B. W/O COMP.					
BT6501	Q9000540	LITHIUM BATTERY	CR2032-HC3H		3V		
C 6501	K26170079	CERAMIC CAP.	DD104-289SL330J50	33pF	50V	SL	
C 6502	K26170079	CERAMIC CAP.	DD104-289SL330J50	33pF	50V	SL	
C 6503	K28129001	CERAMIC CAP.	EP050Y103N-A	0.01uF	16V	Y	
C 6504	K28129001	CERAMIC CAP.	EP050Y103N-A	0.01uF	16V	Y	
C 6505	K28129001	CERAMIC CAP.	EP050Y103N-A	0.01uF	16V	Y	
C 6506	K28129001	CERAMIC CAP.	EP050Y103N-A	0.01uF	16V	Y	
C 6507	K28129001	CERAMIC CAP.	EP050Y103N-A	0.01uF	16V	Y	
C 6508	K28129001	CERAMIC CAP.	EP050Y103N-A	0.01uF	16V	Y	
C 6509	K28129001	CERAMIC CAP.	EP050Y103N-A	0.01uF	16V	Y	
C 6510	K28129001	CERAMIC CAP.	EP050Y103N-A	0.01uF	16V	Y	
C 6511	K28129001	CERAMIC CAP.	EP050Y103N-A	0.01uF	16V	Y	
C 6512	K28129001	CERAMIC CAP.	EP050Y103N-A	0.01uF	16V	Y	
C 6513	K28129001	CERAMIC CAP.	EP050Y103N-A	0.01uF	16V	Y	
C 6514	K28129001	CERAMIC CAP.	EP050Y103N-A	0.01uF	16V	Y	
C 6515	K28129001	CERAMIC CAP.	EP050Y103N-A	0.01uF	16V	Y	
C 6516	K46170031	AL. ELECTRO. CAP.	50V2R2M4X7TR2	2.2uF	50V		
C 6517	K46120007	AL. ELECTRO. CAP.	16V101M6X7TR2	100uF	16V		
C 6518	K28129001	CERAMIC CAP.	EP050Y103N-A	0.01uF	16V	Y	
C 6519	K28129001	CERAMIC CAP.	EP050Y103N-A	0.01uF	16V	Y	
C 6520	K46120007	AL. ELECTRO. CAP.	16V101M6X7TR2	100uF	16V		
C 6521	K28129001	CERAMIC CAP.	EP050Y103N-A	0.01uF	16V	Y	
C 6522	K28129001	CERAMIC CAP.	EP050Y103N-A	0.01uF	16V	Y	
C 6523	K28179002	CERAMIC CAP.	UP050F473Z-A-B	0.047uF	50V	F	
C 6524	K46120007	AL. ELECTRO. CAP.	16V101M6X7TR2	100uF	16V		
C 6525	K28129001	CERAMIC CAP.	EP050Y103N-A	0.01uF	16V	Y	
C 6526	K28129001	CERAMIC CAP.	EP050Y103N-A	0.01uF	16V	Y	
C 6527	K28129001	CERAMIC CAP.	EP050Y103N-A	0.01uF	16V	Y	
C 6528	K28129001	CERAMIC CAP.	EP050Y103N-A	0.01uF	16V	Y	
C 6529	K28129001	CERAMIC CAP.	EP050Y103N-A	0.01uF	16V	Y	
C 6530	K28129001	CERAMIC CAP.	EP050Y103N-A	0.01uF	16V	Y	
C 6531	K28129001	CERAMIC CAP.	EP050Y103N-A	0.01uF	16V	Y	
C 6532	K28129001	CERAMIC CAP.	EP050Y103N-A	0.01uF	16V	Y	
C 6533	K28129001	CERAMIC CAP.	EP050Y103N-A	0.01uF	16V	Y	
C 6534	K28129001	CERAMIC CAP.	EP050Y103N-A	0.01uF	16V	Y	
C 6536	K28179002	CERAMIC CAP.	UP050F473Z-A-B	0.047uF	50V	F	
C 6537	K28179002	CERAMIC CAP.	UP050F473Z-A-B	0.047uF	50V	F	
C 6538	K28179002	CERAMIC CAP.	UP050F473Z-A-B	0.047uF	50V	F	
C 6539	K40149012	AL. ELECTRO. CAP.	RC2-25V100M(5X7)	10uF	25V		
C 6540	K76160015	TANTALUM CAP.	TPDN1V0R1M8S(MX0)	0.1uF	35V		
C 6541	K28129001	CERAMIC CAP.	EP050Y103N-A	0.01uF	16V	Y	
C 6542	K28129001	CERAMIC CAP.	EP050Y103N-A	0.01uF	16V	Y	
C 6543	K28129001	CERAMIC CAP.	EP050Y103N-A	0.01uF	16V	Y	
C 6544	K28129001	CERAMIC CAP.	EP050Y103N-A	0.01uF	16V	Y	
C 6545	K28129001	CERAMIC CAP.	EP050Y103N-A	0.01uF	16V	Y	
C 6546	K46120007	AL. ELECTRO. CAP.	16V101M6X7TR2	100uF	16V		
C 6547	K46120007	AL. ELECTRO. CAP.	16V101M6X7TR2	100uF	16V		
C 6548	K28129001	CERAMIC CAP.	EP050Y103N-A	0.01uF	16V	Y	

Tuner Control Unit

REF.	YAESU P/N	DESCRIPTION	MFGR'S DESIG	VALUE	WV	TOL.	VERS.
C 6549	K28129001	CERAMIC CAP.	EP050Y103N-A	0.01uF	16V	Y	
C 6550	K28129001	CERAMIC CAP.	EP050Y103N-A	0.01uF	16V	Y	
C 6551	K28129001	CERAMIC CAP.	EP050Y103N-A	0.01uF	16V	Y	
C 6552	K28129001	CERAMIC CAP.	EP050Y103N-A	0.01uF	16V	Y	
C 6554	K28129001	CERAMIC CAP.	EP050Y103N-A	0.01uF	16V	Y	
C 6555	K28129001	CERAMIC CAP.	EP050Y103N-A	0.01uF	16V	Y	
C 6556	K28129001	CERAMIC CAP.	EP050Y103N-A	0.01uF	16V	Y	
C 6558	K46120005	AL. ELECTRO. CAP.	16V220M5X7TR2	22uF	16V		
C 6559	K28129001	CERAMIC CAP.	EP050Y103N-A	0.01uF	16V	Y	
C 6560	K28129001	CERAMIC CAP.	EP050Y103N-A	0.01uF	16V	Y	
C 6561	K28129001	CERAMIC CAP.	EP050Y103N-A	0.01uF	16V	Y	
C 6562	K28129001	CERAMIC CAP.	EP050Y103N-A	0.01uF	16V	Y	
C 6563	K28129001	CERAMIC CAP.	EP050Y103N-A	0.01uF	16V	Y	
CO6501	H7900580	CERAMIC OSC	CSA8.00MT				
D 6501	G2060004	DIODE	1SS270TJ				
D 6502	G2060004	DIODE	1SS270TJ				
D 6506	G2060004	DIODE	1SS270TJ				
D 6507	G2090452	DIODE	HZ3A2				
D 6508	G2060004	DIODE	1SS270TJ				
D 6512	G2090118	DIODE	1SS97				
D 6513	G2060004	DIODE	1SS270TJ				
D 6514	G2060004	DIODE	1SS270TJ				
D 6515	G2060004	DIODE	1SS270TJ				
D 6516	G2060004	DIODE	1SS270TJ				
D 6517	G2060004	DIODE	1SS270TJ				
J 6501	P0090632	CONNECTOR	SC25-13WS				
J 6502	P0090626	CONNECTOR	SC25-07WS				
J 6503	P0090623	CONNECTOR	SC25-04WS				
J 6504	P0090639	CONNECTOR	SC25-06WL				
J 6506	P0090712	CONNECTOR	SC25-02WL				
J 6507	P0090717	CONNECTOR	SC25-10WL				
L 6501	L1790095	M. RFC	LAL03TA100K	10uH			
Q 6501	G1091243	IC	M37450M4-494FP				
Q 6502	G1090554	IC	UPA2003C				
Q 6503	G1090554	IC	UPA2003C				
Q 6504	G1090694	IC	M5278L56				
Q 6507	G3304584B	TRANSISTOR	2SC458BTZ				
Q 6508	G1090988	IC	M5223L				
Q 6509	G1091140	IC	M5218AL				
Q 6510	G1090757	IC	M5224P				
Q 6511	G3801040J	FET	2SK104J				
Q 6512	G3801040J	FET	2SK104J				
Q 6513	G1090297	IC	UPD4094BC				
Q 6514	G1090297	IC	UPD4094BC				
Q 6515	G3304584B	TRANSISTOR	2SC458BTZ				
Q 6516	G3304584B	TRANSISTOR	2SC458BTZ				
R 6501	J07225105	CARBON FILM RES.	RD16TPJ105	1M	1/6W		
R 6502	J07225104	CARBON FILM RES.	RD16TPJ104	100K	1/6W		
R 6503	J07225104	CARBON FILM RES.	RD16TPJ104	100K	1/6W		

REF.	YAESU P/N	DESCRIPTION	MFGR'S DESIG	VALUE	WV	TOL.	VERS.
R 6504	J07225104	CARBON FILM RES.	RD16TPJ104	100K	1/6W		
R 6505	J07225104	CARBON FILM RES.	RD16TPJ104	100K	1/6W		
R 6506	J07225104	CARBON FILM RES.	RD16TPJ104	100K	1/6W		
R 6507	J07225104	CARBON FILM RES.	RD16TPJ104	100K	1/6W		
R 6508	J07225104	CARBON FILM RES.	RD16TPJ104	100K	1/6W		
R 6509	J07225104	CARBON FILM RES.	RD16TPJ104	100K	1/6W		
R 6510	J07225104	CARBON FILM RES.	RD16TPJ104	100K	1/6W		
R 6511	J07225104	CARBON FILM RES.	RD16TPJ104	100K	1/6W		
R 6512	J07225103	CARBON FILM RES.	RD16TPJ103	10K	1/6W		
R 6513	J07225470	CARBON FILM RES.	RD16TPJ470	47	1/6W		
R 6514	J07225103	CARBON FILM RES.	RD16TPJ103	10K	1/6W		
R 6515	J07225103	CARBON FILM RES.	RD16TPJ103	10K	1/6W		
R 6516	J07225104	CARBON FILM RES.	RD16TPJ104	100K	1/6W		
R 6517	J07225104	CARBON FILM RES.	RD16TPJ104	100K	1/6W		
R 6518	J07225104	CARBON FILM RES.	RD16TPJ104	100K	1/6W		
R 6519	J07225104	CARBON FILM RES.	RD16TPJ104	100K	1/6W		
R 6520	J07225474	CARBON FILM RES.	RD16TPJ474	470K	1/6W		
R 6521	J07225474	CARBON FILM RES.	RD16TPJ474	470K	1/6W		
R 6523	J07225104	CARBON FILM RES.	RD16TPJ104	100K	1/6W		
R 6524	J07225104	CARBON FILM RES.	RD16TPJ104	100K	1/6W		
R 6528	J07225473	CARBON FILM RES.	RD16TPJ473	47K	1/6W		
R 6529	J07225104	CARBON FILM RES.	RD16TPJ104	100K	1/6W		
R 6530	J07225392	CARBON FILM RES.	RD16TPJ392	3.9K	1/6W		
R 6531	J07225103	CARBON FILM RES.	RD16TPJ103	10K	1/6W		
R 6532	J07225104	CARBON FILM RES.	RD16TPJ104	100K	1/6W		
R 6533	J07225224	CARBON FILM RES.	RD16TPJ224	220K	1/6W		
R 6541	J07225333	CARBON FILM RES.	RD16TPJ333	33K	1/6W		
R 6542	J07225473	CARBON FILM RES.	RD16TPJ473	47K	1/6W		
R 6543	J07225472	CARBON FILM RES.	RD16TPJ472	4.7K	1/6W		
R 6544	J07225103	CARBON FILM RES.	RD16TPJ103	10K	1/6W		
R 6545	J07225104	CARBON FILM RES.	RD16TPJ104	100K	1/6W		
R 6546	J07225224	CARBON FILM RES.	RD16TPJ224	220K	1/6W		
R 6549	J07225225	CARBON FILM RES.	RD16TPJ225	2.2M	1/6W		
R 6550	J07225103	CARBON FILM RES.	RD16TPJ103	10K	1/6W		
R 6551	J07225104	CARBON FILM RES.	RD16TPJ104	100K	1/6W		
R 6554	J07225102	CARBON FILM RES.	RD16TPJ102	1K	1/6W		
R 6555	J07225474	CARBON FILM RES.	RD16TPJ474	470K	1/6W		
R 6556	J07225225	CARBON FILM RES.	RD16TPJ225	2.2M	1/6W		
R 6559	J07225123	CARBON FILM RES.	RD16TPJ123	12K	1/6W		
R 6560	J07225103	CARBON FILM RES.	RD16TPJ103	10K	1/6W		
R 6561	J07225223	CARBON FILM RES.	RD16TPJ223	22K	1/6W		
R 6562	J07225103	CARBON FILM RES.	RD16TPJ103	10K	1/6W		
R 6563	J07225103	CARBON FILM RES.	RD16TPJ103	10K	1/6W		
R 6564	J07225473	CARBON FILM RES.	RD16TPJ473	47K	1/6W		
R 6565	J07225103	CARBON FILM RES.	RD16TPJ103	10K	1/6W		
R 6566	J07225103	CARBON FILM RES.	RD16TPJ103	10K	1/6W		
R 6568	J07225104	CARBON FILM RES.	RD16TPJ104	100K	1/6W		
R 6569	J07225104	CARBON FILM RES.	RD16TPJ104	100K	1/6W		
R 6570	J07225104	CARBON FILM RES.	RD16TPJ104	100K	1/6W		
R 6571	J07225104	CARBON FILM RES.	RD16TPJ104	100K	1/6W		
R 6572	J07225104	CARBON FILM RES.	RD16TPJ104	100K	1/6W		
R 6574	J07225470	CARBON FILM RES.	RD16TPJ470	47	1/6W		
R 6575	J07225470	CARBON FILM RES.	RD16TPJ470	47	1/6W		
R 6576	J07225470	CARBON FILM RES.	RD16TPJ470	47	1/6W		
R 6577	J07225470	CARBON FILM RES.	RD16TPJ470	47	1/6W		

Tuner Control Unit

REF.	YAESU P/N	DESCRIPTION	MFGR'S DESIG	VALUE	WV	TOL.	VERS.
R 6578	J07225470	CARBON FILM RES.	RD16TPJ470	47	1/6W		
R 6579	J07225470	CARBON FILM RES.	RD16TPJ470	47	1/6W		
R 6580	J07225470	CARBON FILM RES.	RD16TPJ470	47	1/6W		
R 6581	J07225470	CARBON FILM RES.	RD16TPJ470	47	1/6W		
R 6582	J07225470	CARBON FILM RES.	RD16TPJ470	47	1/6W		
R 6583	J07225470	CARBON FILM RES.	RD16TPJ470	47	1/6W		
R 6584	J07225470	CARBON FILM RES.	RD16TPJ470	47	1/6W		
R 6585	J07225470	CARBON FILM RES.	RD16TPJ470	47	1/6W		
R 6586	J07225103	CARBON FILM RES.	RD16TPJ103	10K	1/6W		
R 6588	J07225102	CARBON FILM RES.	RD16TPJ102	1K	1/6W		
R 6589	J07225102	CARBON FILM RES.	RD16TPJ102	1K	1/6W		
R 6590	J07225102	CARBON FILM RES.	RD16TPJ102	1K	1/6W		
R 6591	J07225102	CARBON FILM RES.	RD16TPJ102	1K	1/6W		
R 6593	J07225222	CARBON FILM RES.	RD16TPJ222	2.2K	1/6W		
R 6600	J07225105	CARBON FILM RES.	RD16TPJ105	1M	1/6W		
R 6601	J07225334	CARBON FILM RES.	RD16TPJ334	330K	1/6W		
R 6602	J07225224	CARBON FILM RES.	RD16TPJ224	220K	1/6W		
R 6603	J07225105	CARBON FILM RES.	RD16TPJ105	1M	1/6W		
R 6604	J07225334	CARBON FILM RES.	RD16TPJ334	330K	1/6W		
R 6605	J07225224	CARBON FILM RES.	RD16TPJ224	220K	1/6W		
R 6606	J07225153	CARBON FILM RES.	RD16TPJ153	15K	1/6W		
R 6607	J07225123	CARBON FILM RES.	RD16TPJ123	12K	1/6W		
R 6608	J07225473	CARBON FILM RES.	RD16TPJ473	47K	1/6W		
S 6501	N6090066	SLIDE SWITCH	SS912L4NS				
TP6501	Q5000050	TP-K	IPS-1136				
TP6502	Q5000050	TP-K	IPS-1136				
VR6501	J51783203	POT.	EVN-DXAA03B24	20K			
VR6502	J51783203	POT.	EVN-DXAA03B24	20K			
	R0139390	SHIELD PLATE					

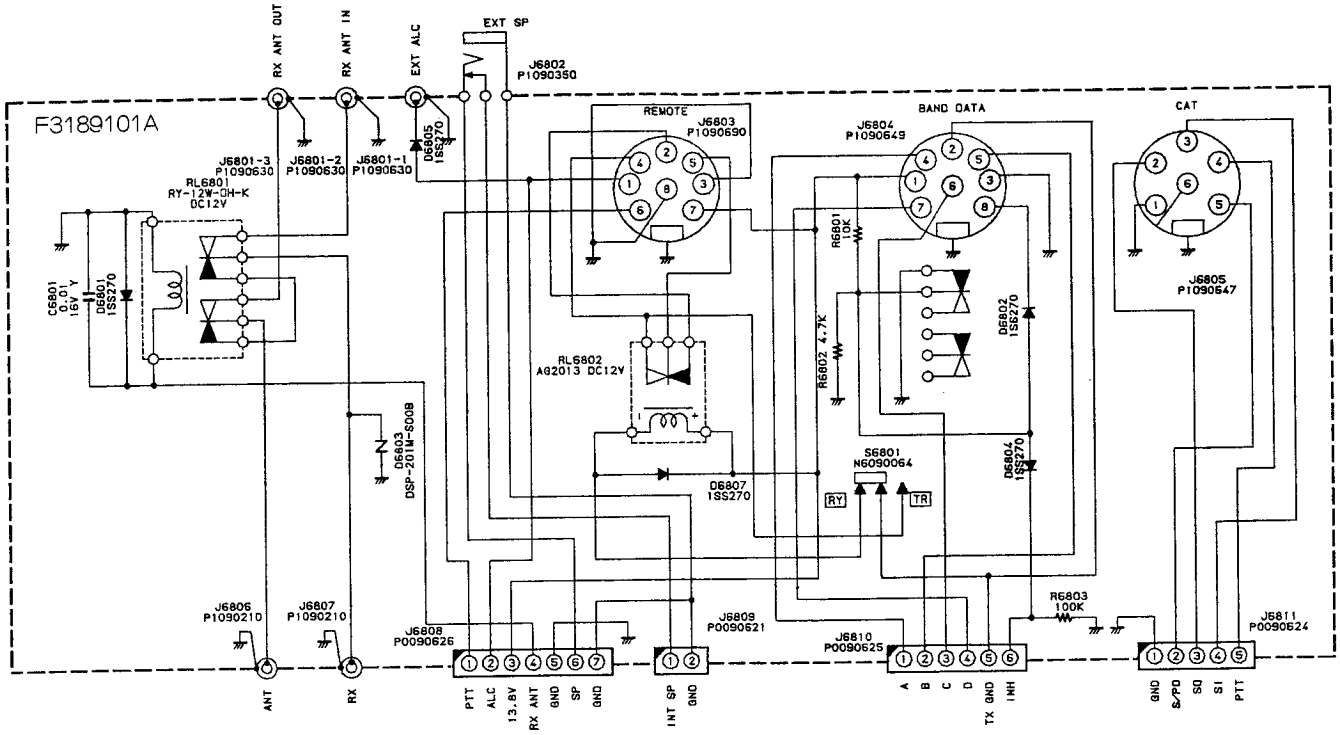

NOTE:
RESISTOR VALUES ARE IN Ω,1/6W ±
UNLESS OTHERWISE NOTED.

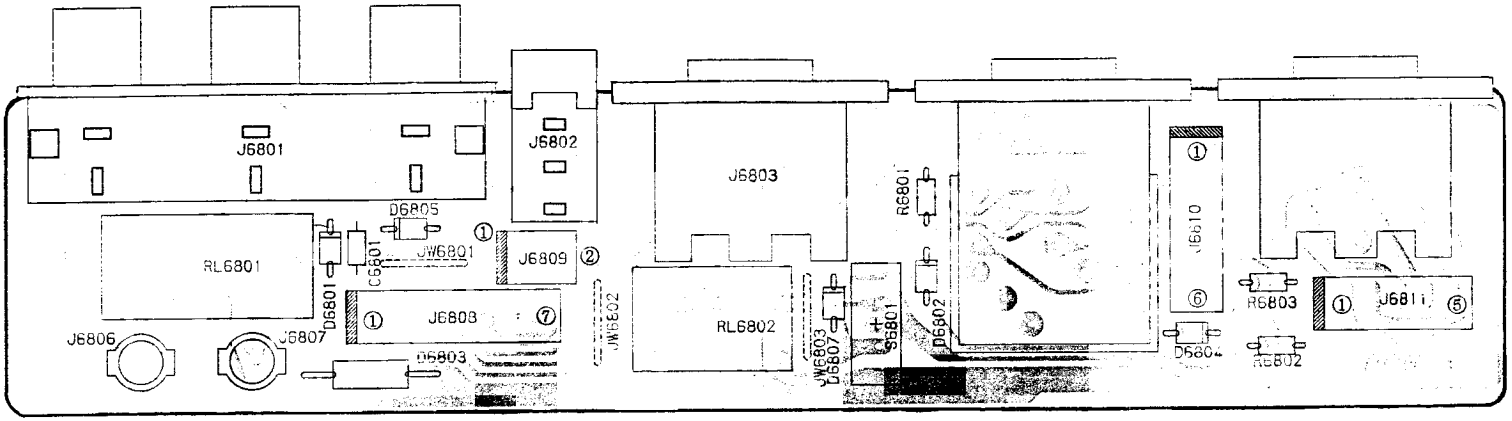

("component" side)

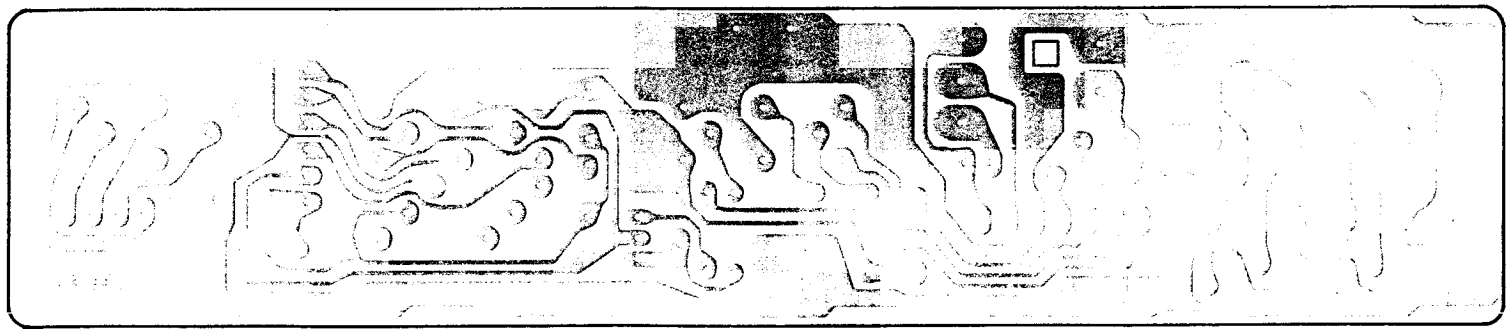

("solder" side)

REF.	YAESU P/N	DESCRIPTION	MFGR'S DESIG	VALUE	WV	TOL.	VERS.
		*** CONNECTOR UNIT ***					
	CA0414001	P.C.B. W COMP.					
	F3189101A	P.C.B. W/O COMP.					
C 6801	K28129001	CERAMIC CAP.	EP050Y103N-A	0.01uF	16V	Y	
D 6801	G2060004	DIODE	1SS270TJ				
D 6802	G2060004	DIODE	1SS270TJ				
D 6803	Q9000375	SURGE ABSORBER	DSP201M-S00B				
D 6804	G2060004	DIODE	1SS270TJ				
D 6805	G2060004	DIODE	1SS270TJ				
D 6807	G2060004	DIODE	1SS270TJ				
J 6801	P1090630	CONNECTOR	JPJ2043-01-211				
J 6802	P1090350	CONNECTOR	SG8035#01				
J 6803	P1090690	CONNECTOR	TCS5073-18-4151				
J 6804	P1090649	CONNECTOR	TCS5073-59-4151				
J 6805	P1090647	CONNECTOR	TCS5073-16-4151				
J 6806	P1090210	CONNECTOR	TMP-J01X-V6				
J 6807	P1090210	CONNECTOR	TMP-J01X-V6				
J 6808	P0090626	CONNECTOR	SC25-07WS				
J 6809	P0090621	CONNECTOR	SC25-02WS				
J 6810	P0090625	CONNECTOR	SC25-06WS				
J 6811	P0090624	CONNECTOR	SC25-05WS				
R 6801	J07225103	CARBON FILM RES.	RD16TPJ103	10K	1/6W		
R 6802	J07225472	CARBON FILM RES.	RD16TPJ472	4.7K	1/6W		
R 6803	J07225104	CARBON FILM RES.	RD16TPJ104	100K	1/6W		
RL6801	M1190097	RELAY	RY-12W-OH-K DC12V		DC12V		
RL6802	M1190045	RELAY	AG2013 DC12V		DC12V		
S 6801	N6090064	SLIDE SWITCH	SS912				

Notes:

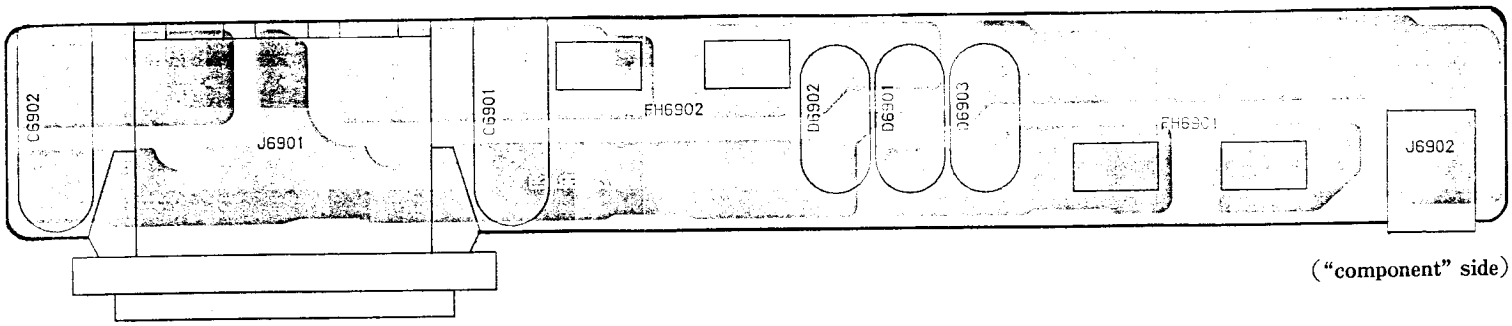

("component" side)

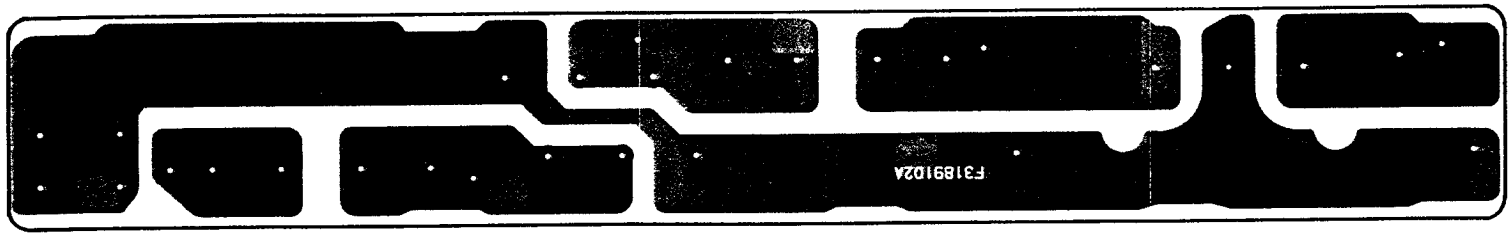

("solder" side)

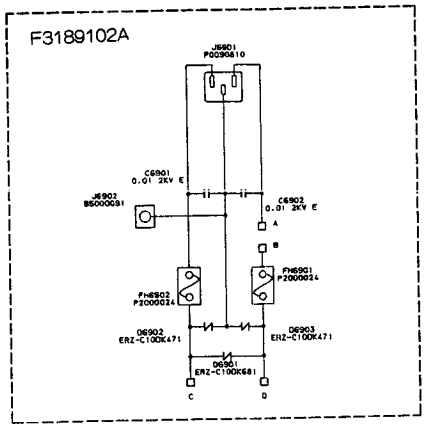

REF.	YAESU P/N	DESCRIPTION	MFGR'S DESIG	VALUE	WV	TOL.	VERS.
		*** PROTECTOR UNIT ***					
	CA0415001	P.C.B. W COMP.					
	F3189102A	P.C.B. W/O COMP.					
C 6901	K12329001	CERAMIC CAP.	ECKDNS103ME	0.01uF	2KV	E	
C 6902	K12329001	CERAMIC CAP.	ECKDNS103ME	0.01uF	2KV	E	
D 6901	Q9000382	SURGE ABSORBER	ERZ-C10DK681				
D 6902	Q9000381	SURGE ABSORBER	ERZ-C10DK471				
D 6903	Q9000381	SURGE ABSORBER	ERZ-C10DK471				
FH6901	P2000024	FUSE CLIP	UF-0033#01				
FH6902	P2000024	FUSE CLIP	UF-0033#01				
J 6901	P0090810	CONNECTOR	WCF1063B				
J 6902	S5000091	TERMINAL	P-96				

Notes:

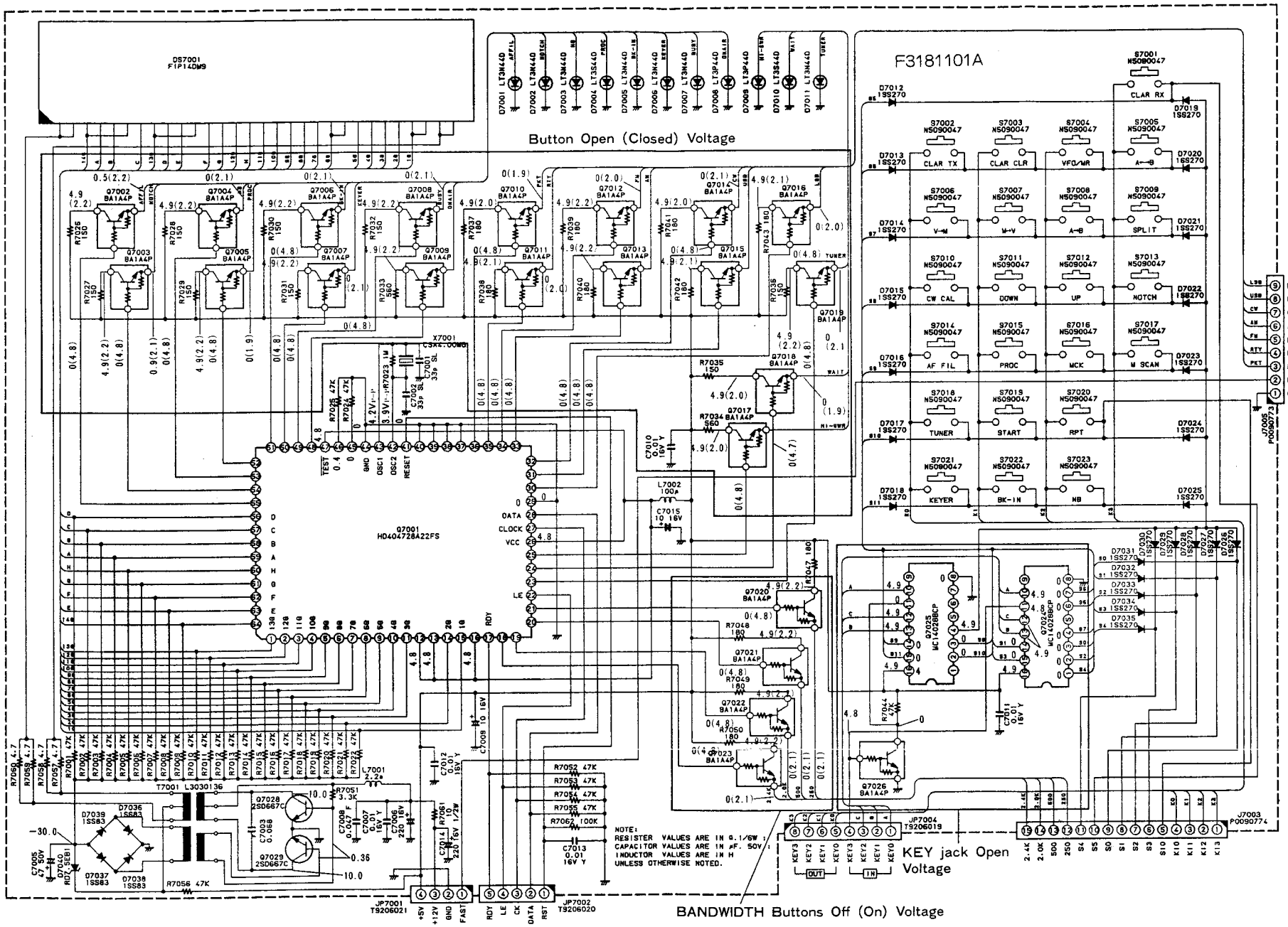
F3181101A
Button Open (Closed) Voltage
KEY jack Open Voltage
BANDWIDTH Buttons Off (On) Voltage
NOTE:
RESISTER VALUES ARE IN Ω 1/6W ±
CAPACITOR VALUES ARE IN μF. 50V ±
INDUCTOR VALUES ARE IN H
UNLESS OTHERWISE NOTED.

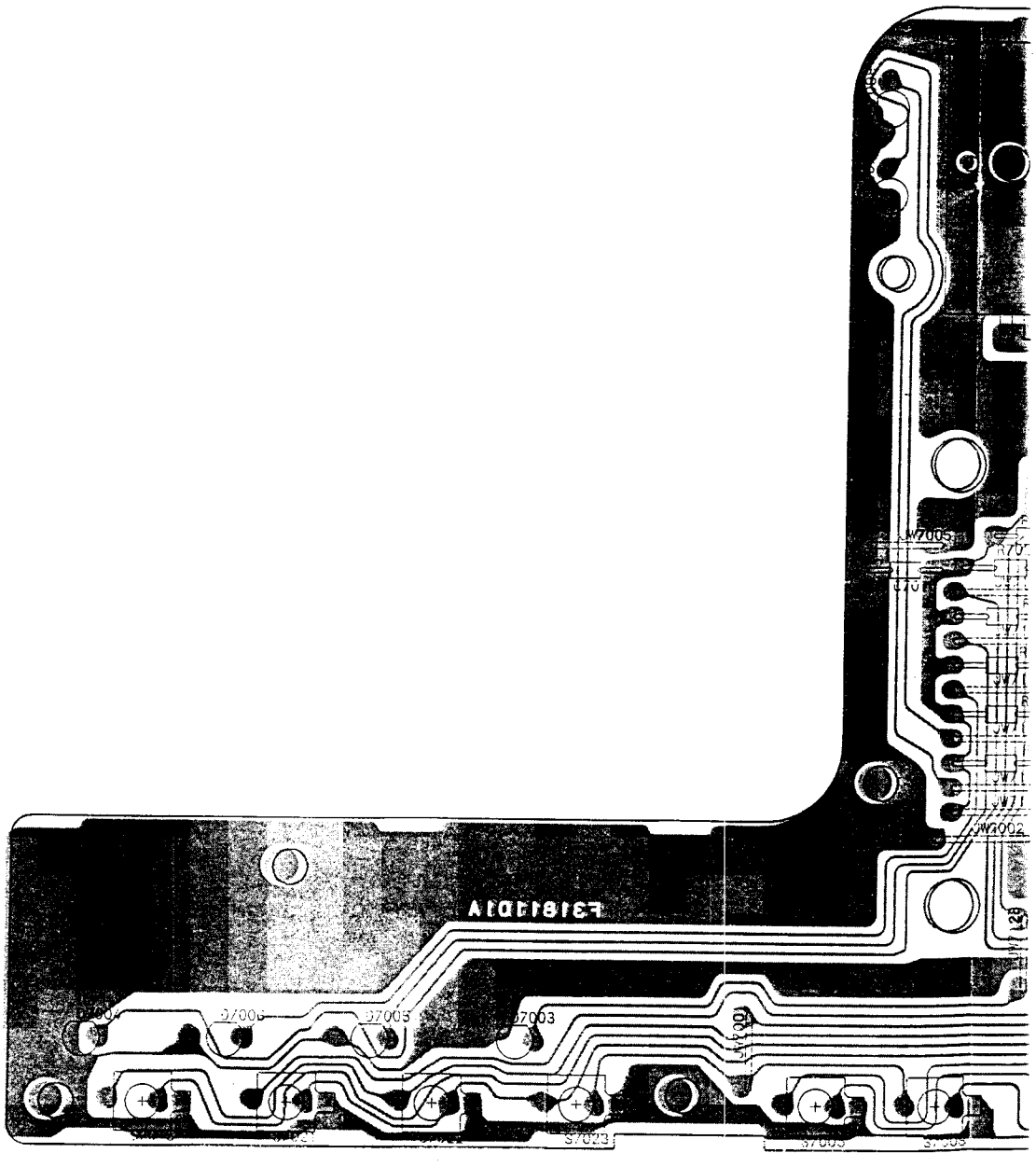
W7005
W7002
S7006
S7005
S7003
S7023


64
52
1
51

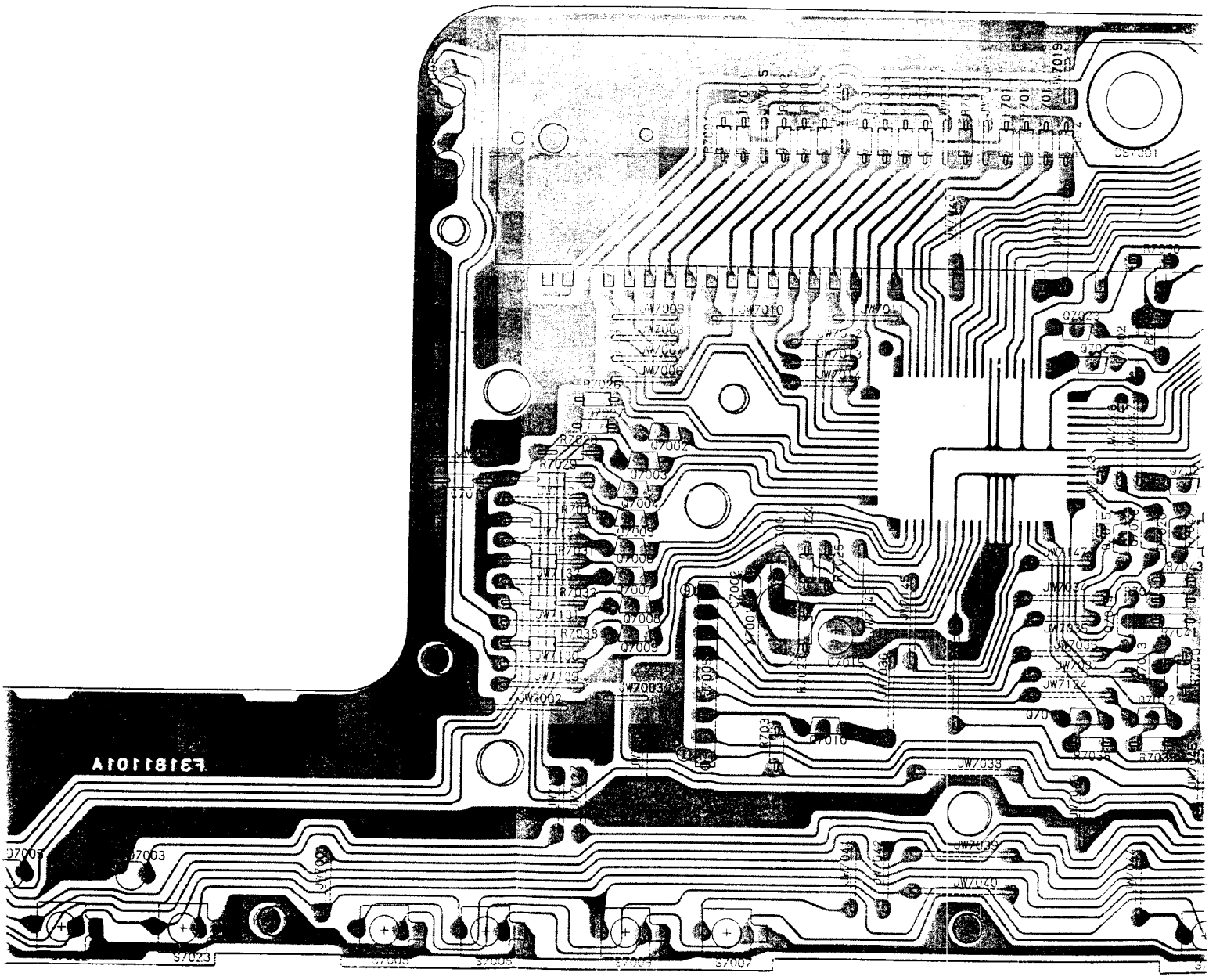
DS7001
JW7009
JW7010
JW7011
JW7006
R7026
R7028
R7029
Q7002
Q7003
Q7004
Q7005
Q7006
Q7007
Q7008
Q7009
R7032
R7033
JW7002
JW7003
Q7010
JW7124
JW7033
JW7039
JW7040
Q7005
Q7003
S7023
S7007

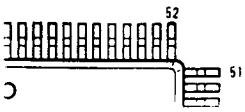
52
51

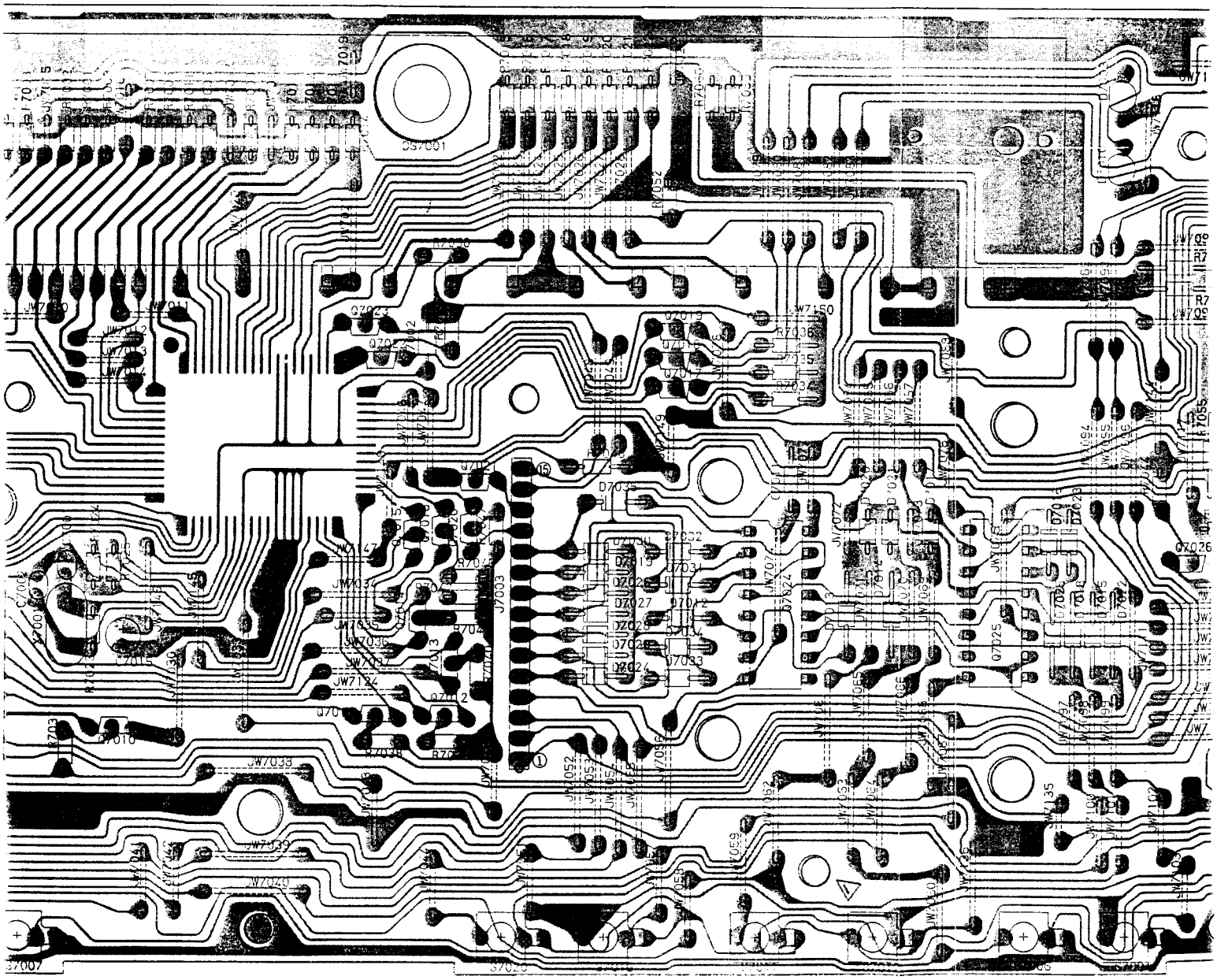

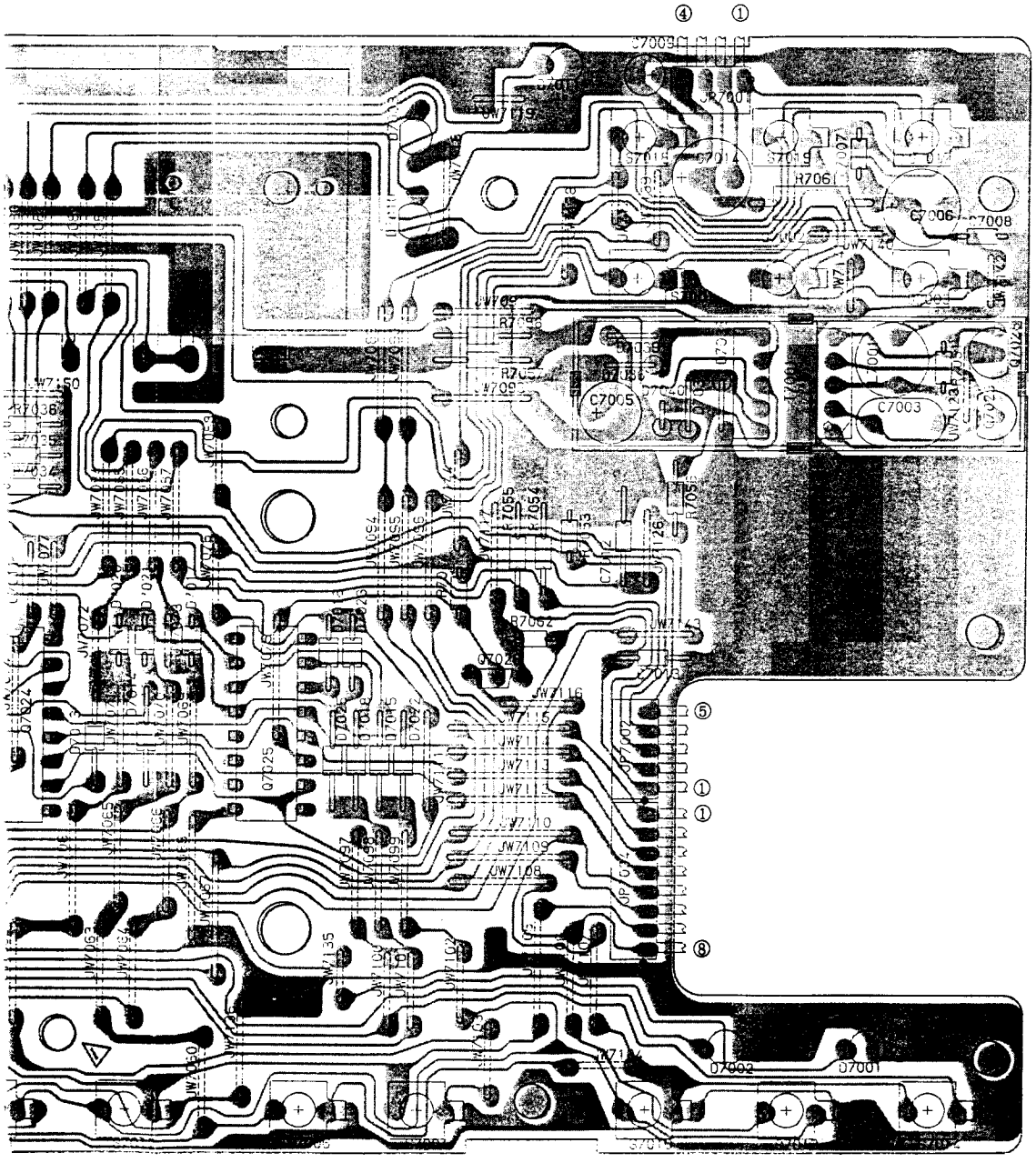

("component" side)

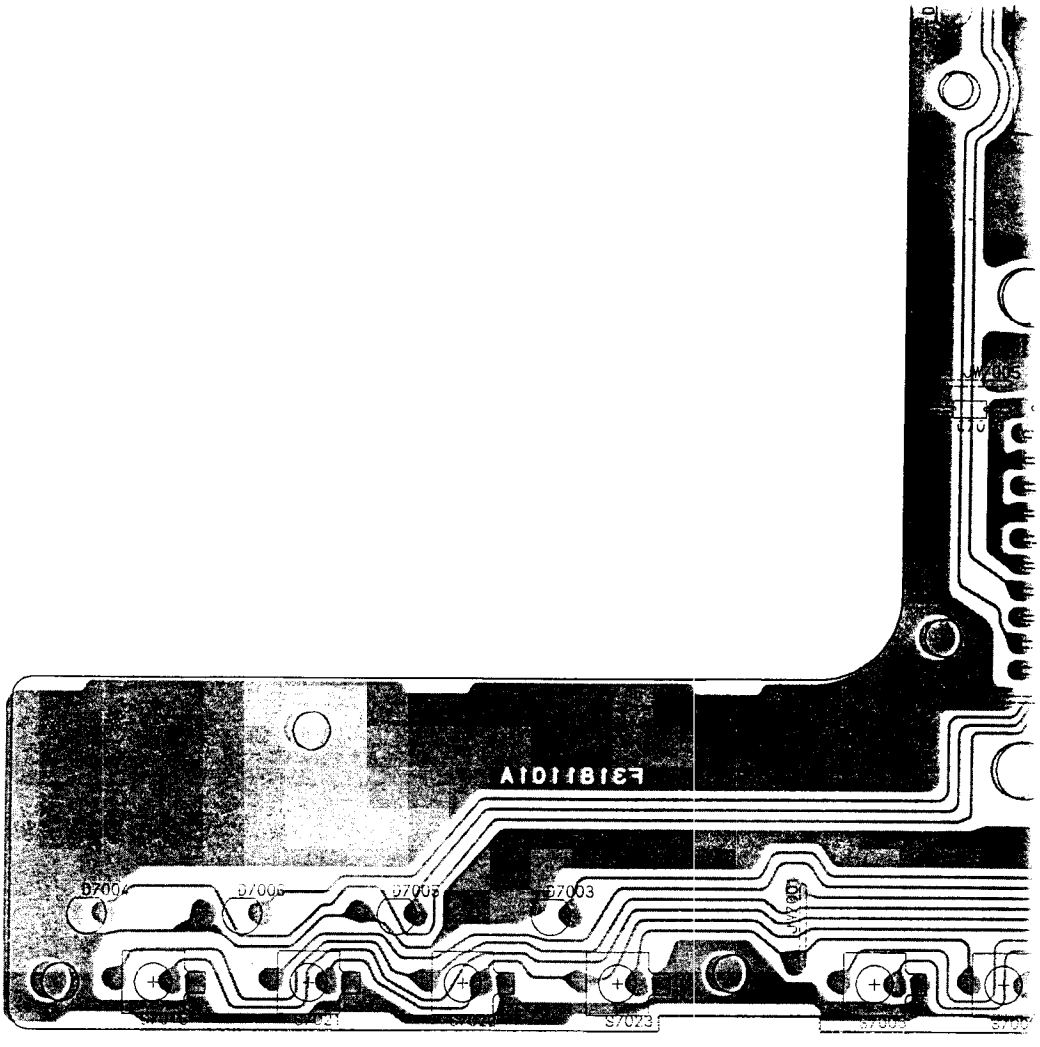

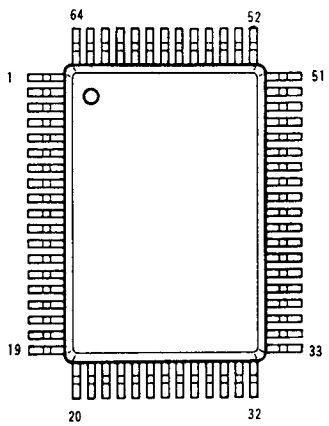

HD404728A22FS
(Q7001)

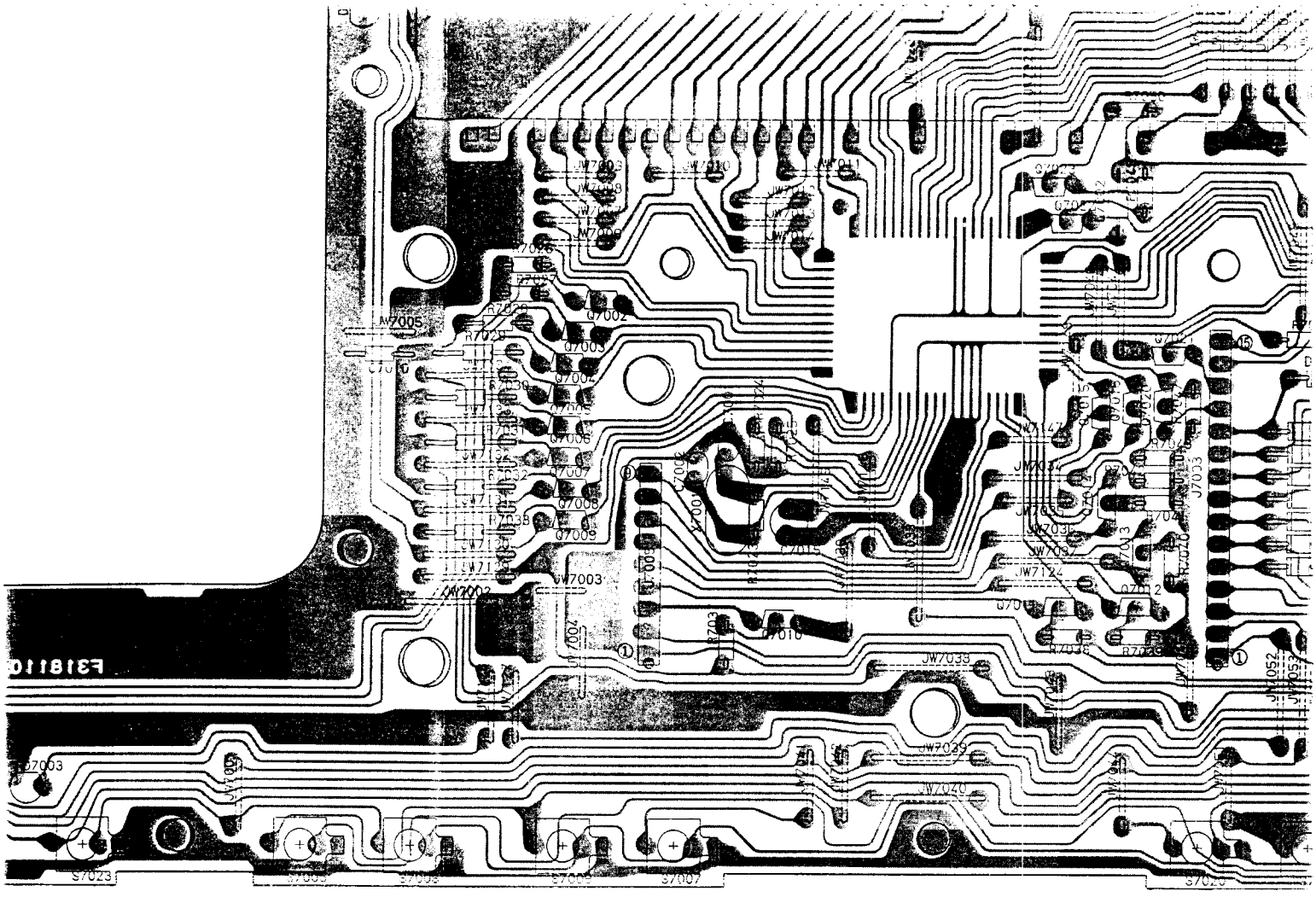

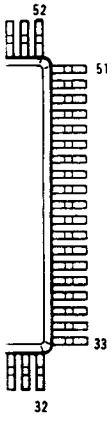

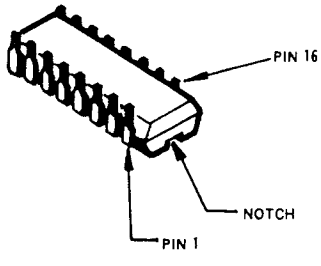

MC14028BCP
(Q7024, 7025)

A22FS

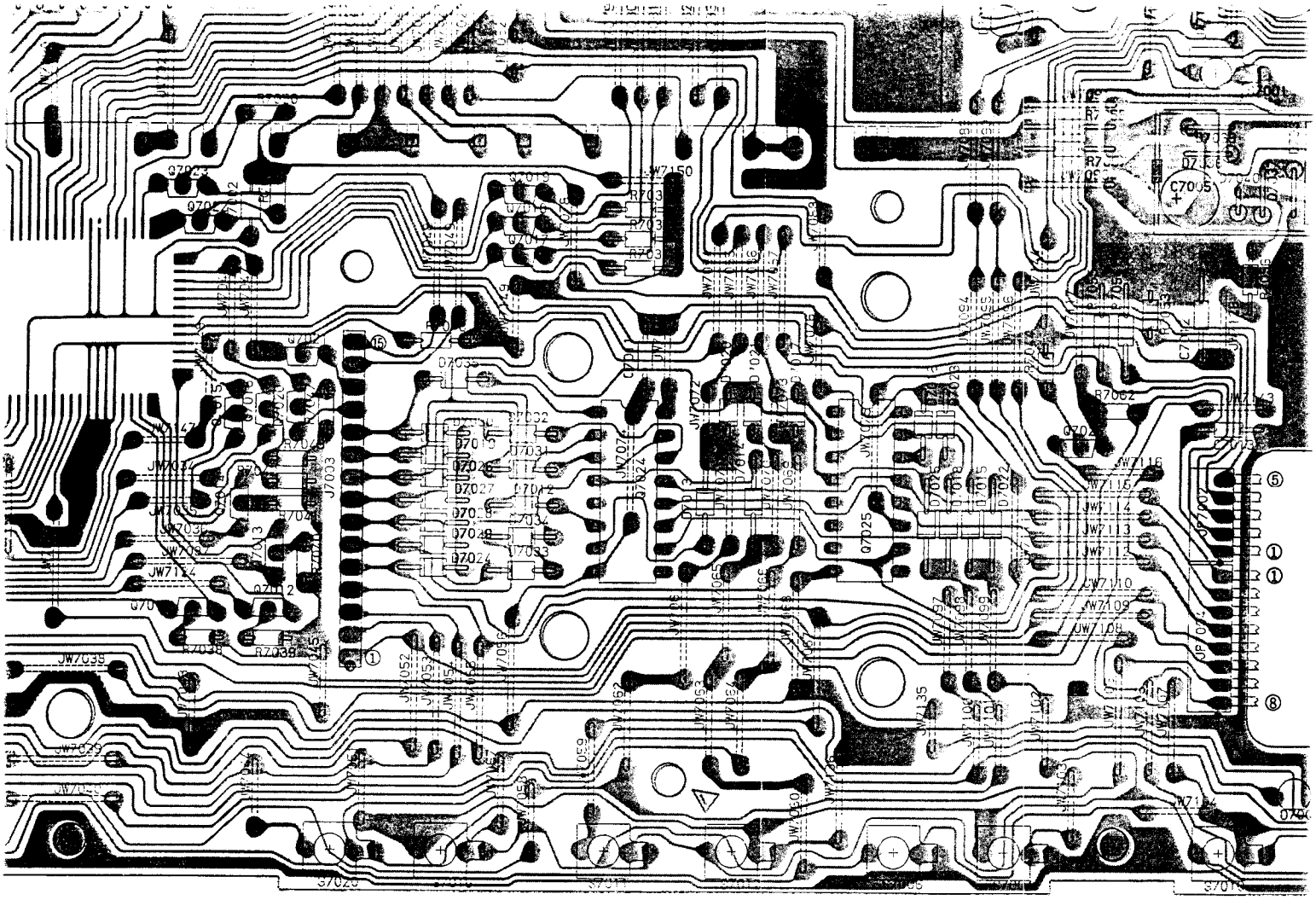

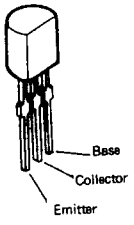

2SD667C
(Q7028, 7029)

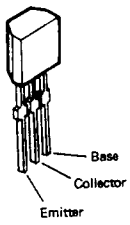

BA1A4P
(Q7002, 7003, 7004, 7005, 7006, 7007, 7008, 7009, 7010, 7011, 7012, 7013, 7014, 7015, 7016, 7017, 7018, 7019, 7020, 7021, 7022, 7023, 7026)

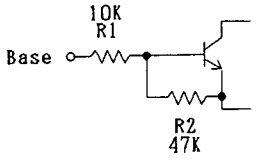

BA1A4P CIRCUIT

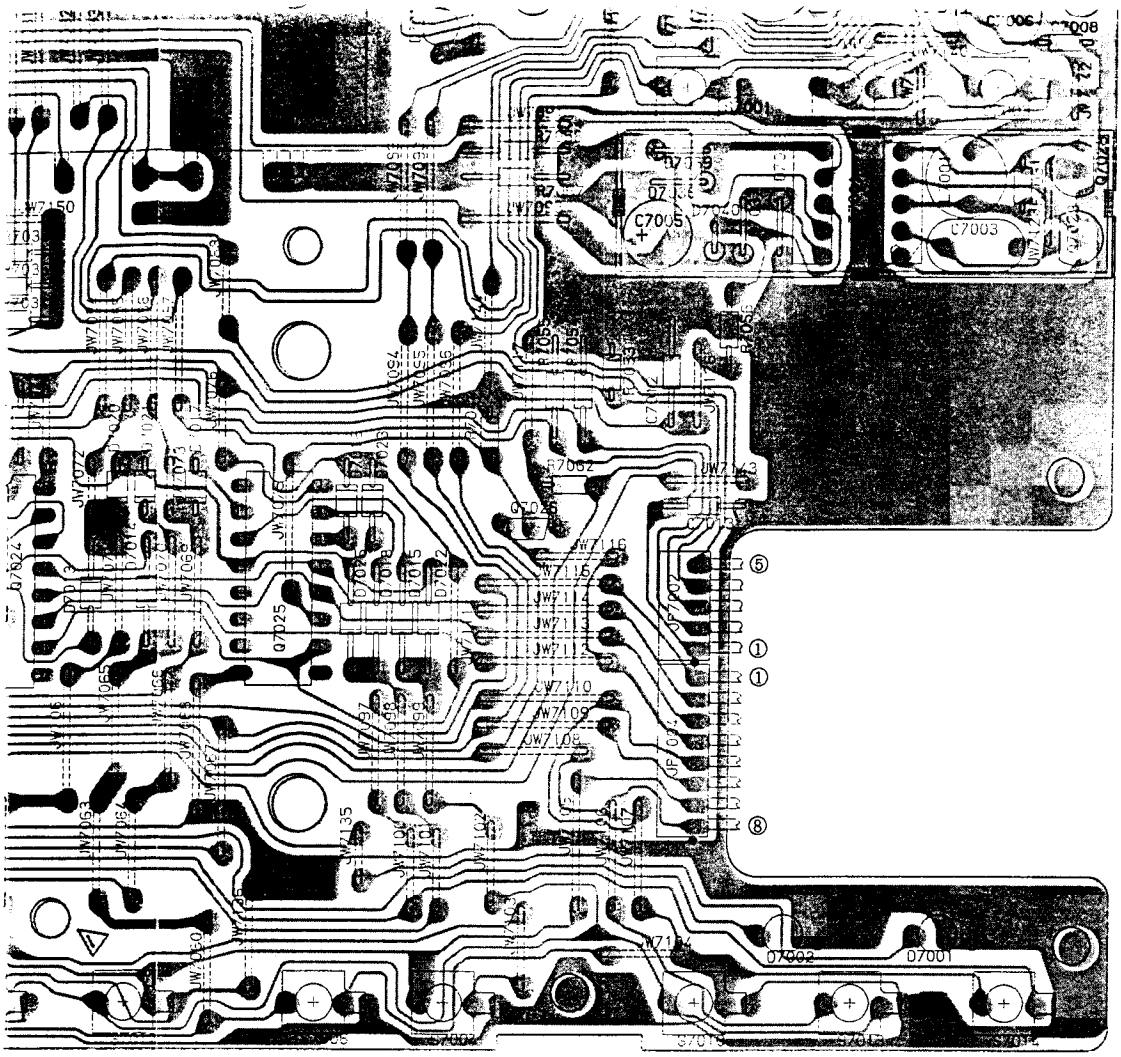

("component" side)

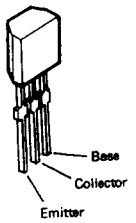

BA1A4P
(Q7002, 7003, 7004,
7005, 7006, 7007,
7008, 7009, 7010,
7011, 7012, 7013,
7014, 7015, 7016,
7017, 7018, 7019,
7020, 7021, 7022,
7023, 7026)

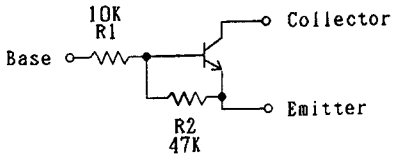

BA1A4P CIRCUIT DIAGRAM

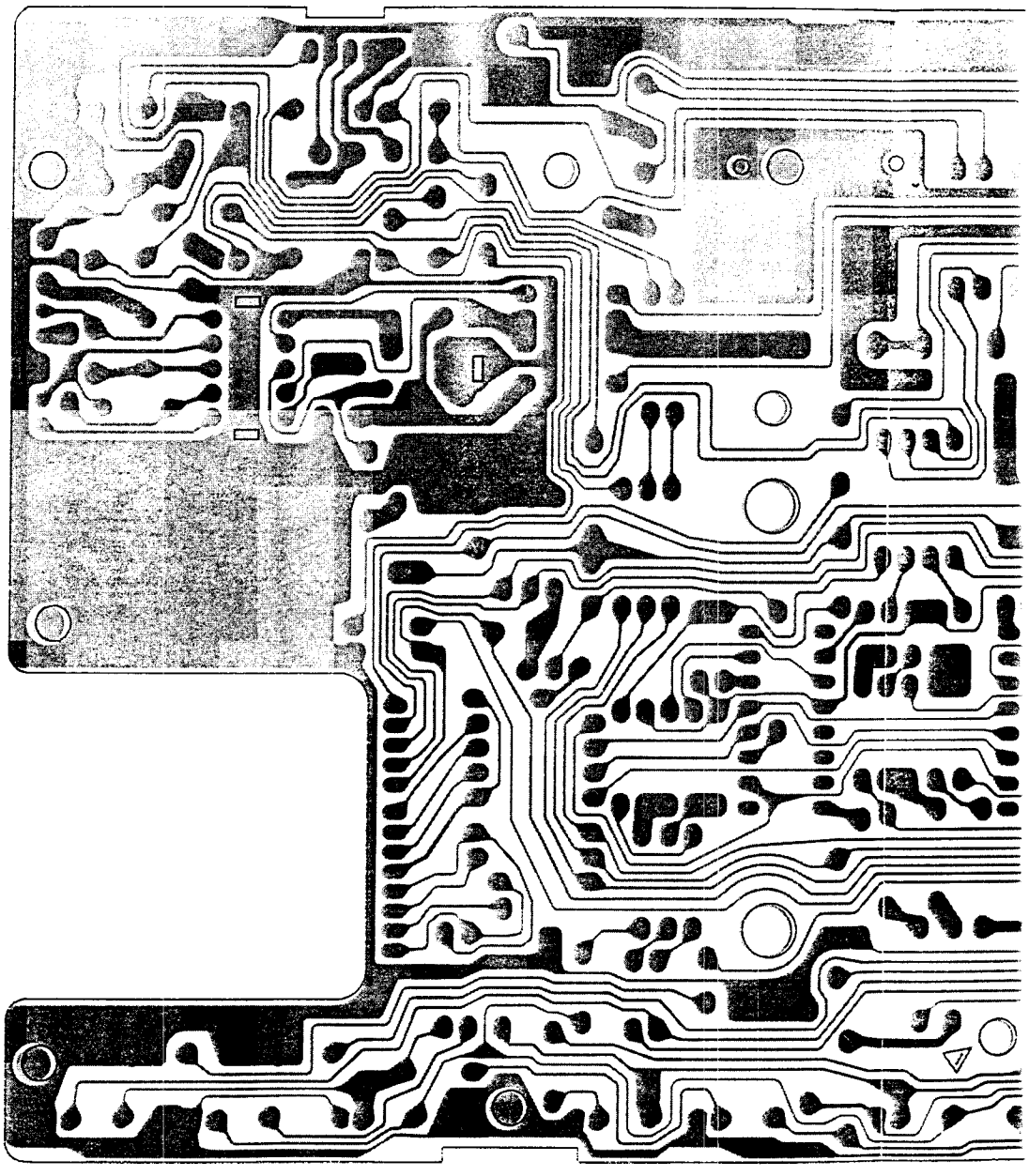

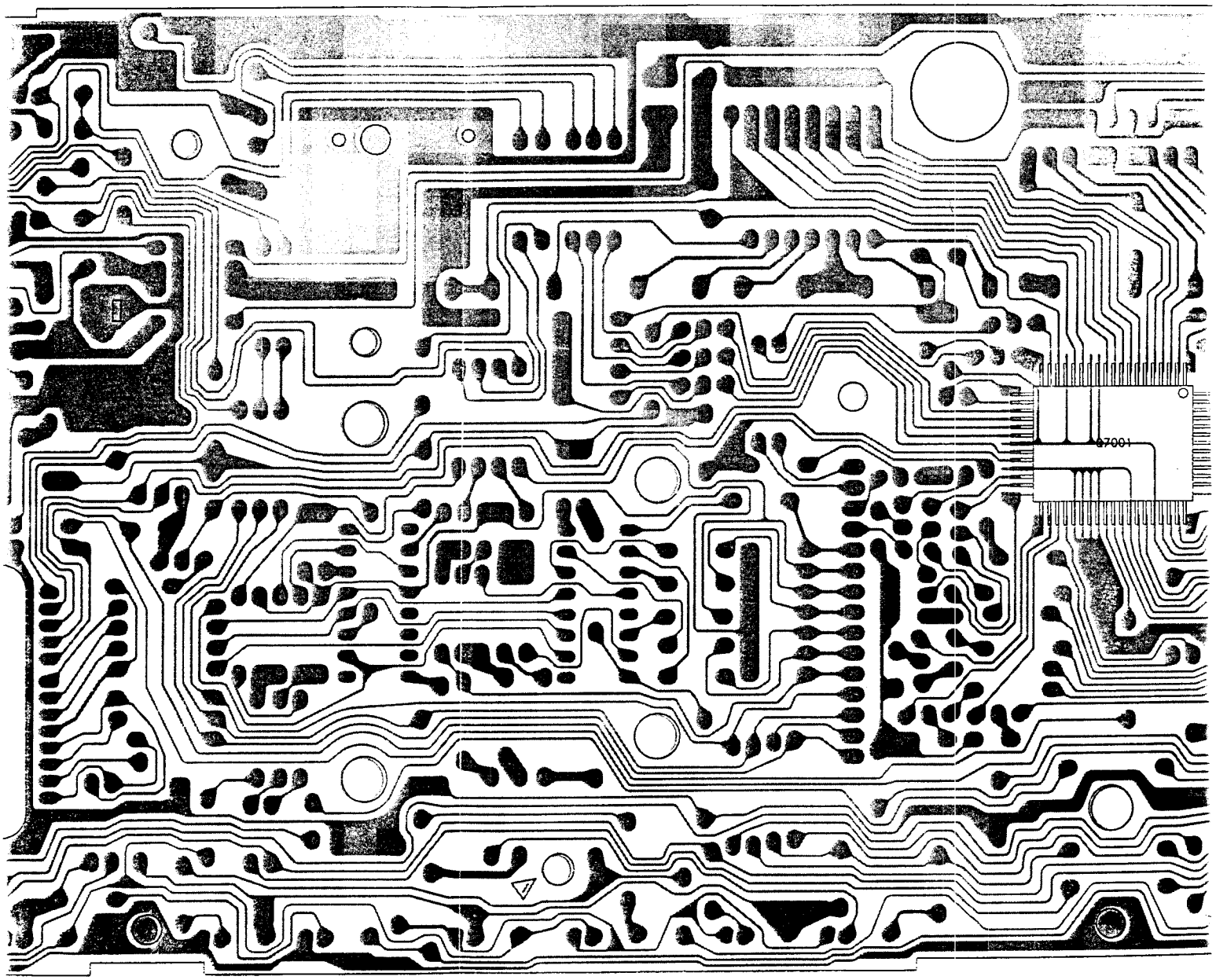
87001

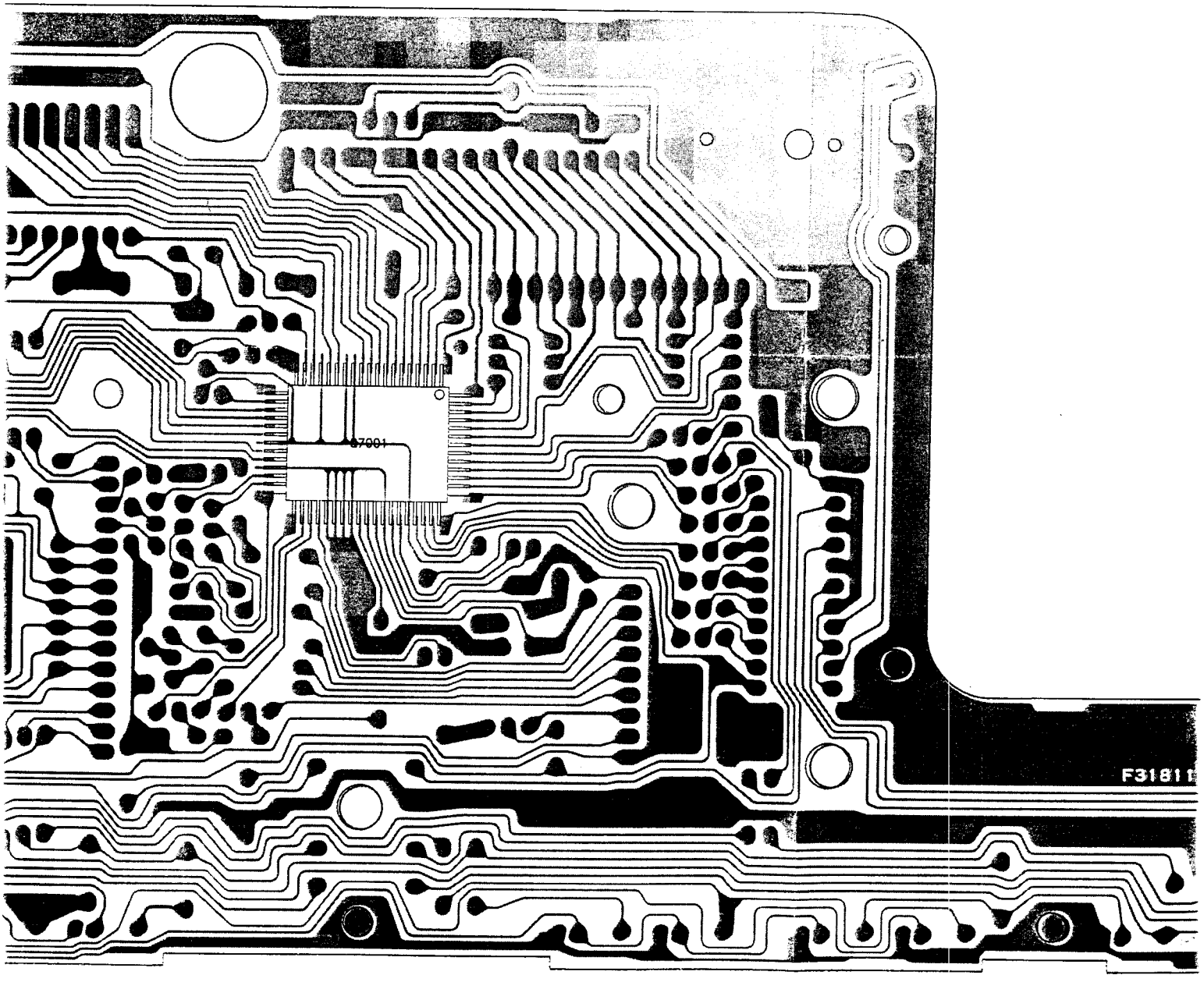
87001
F31811

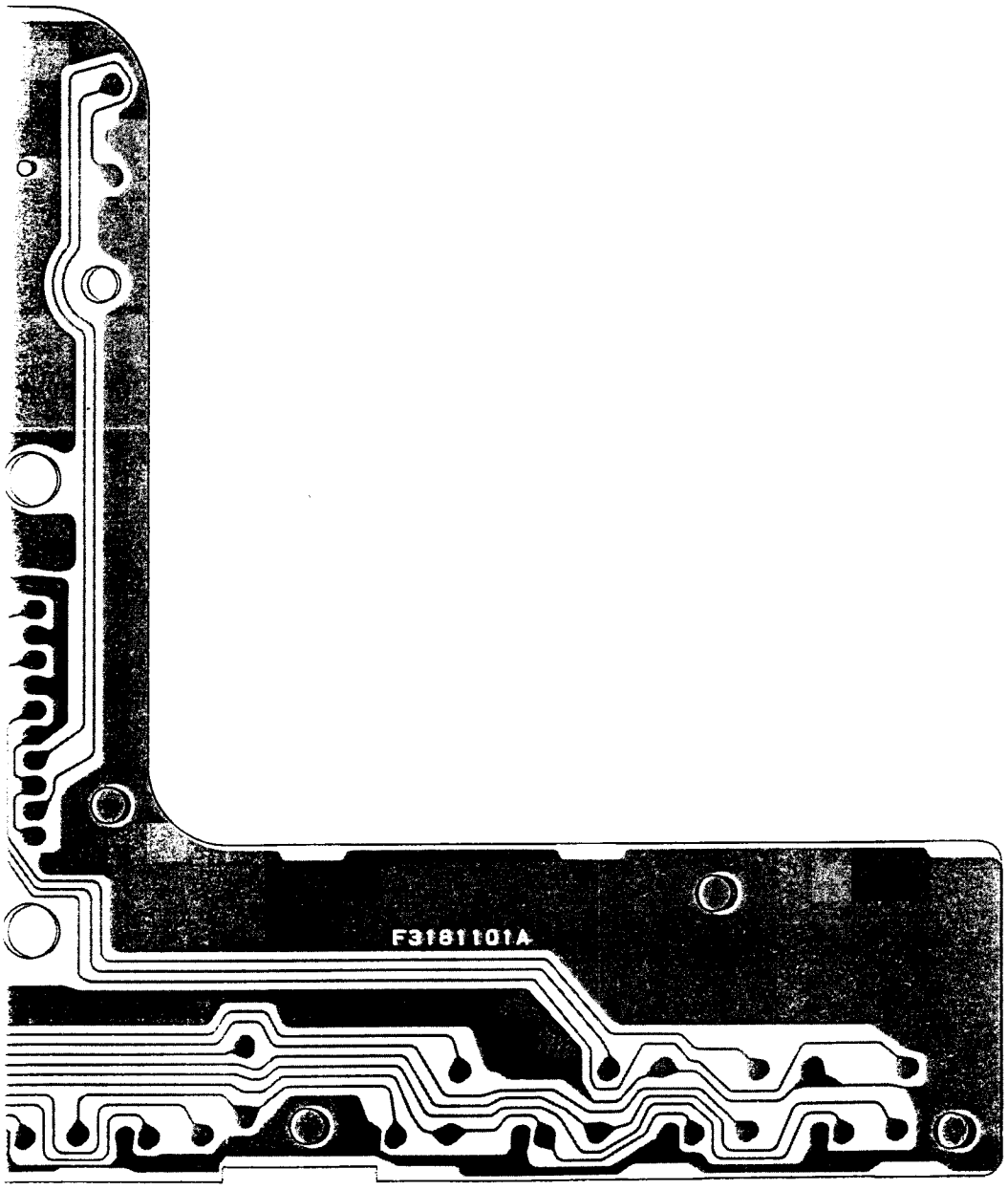

("chip only" side)

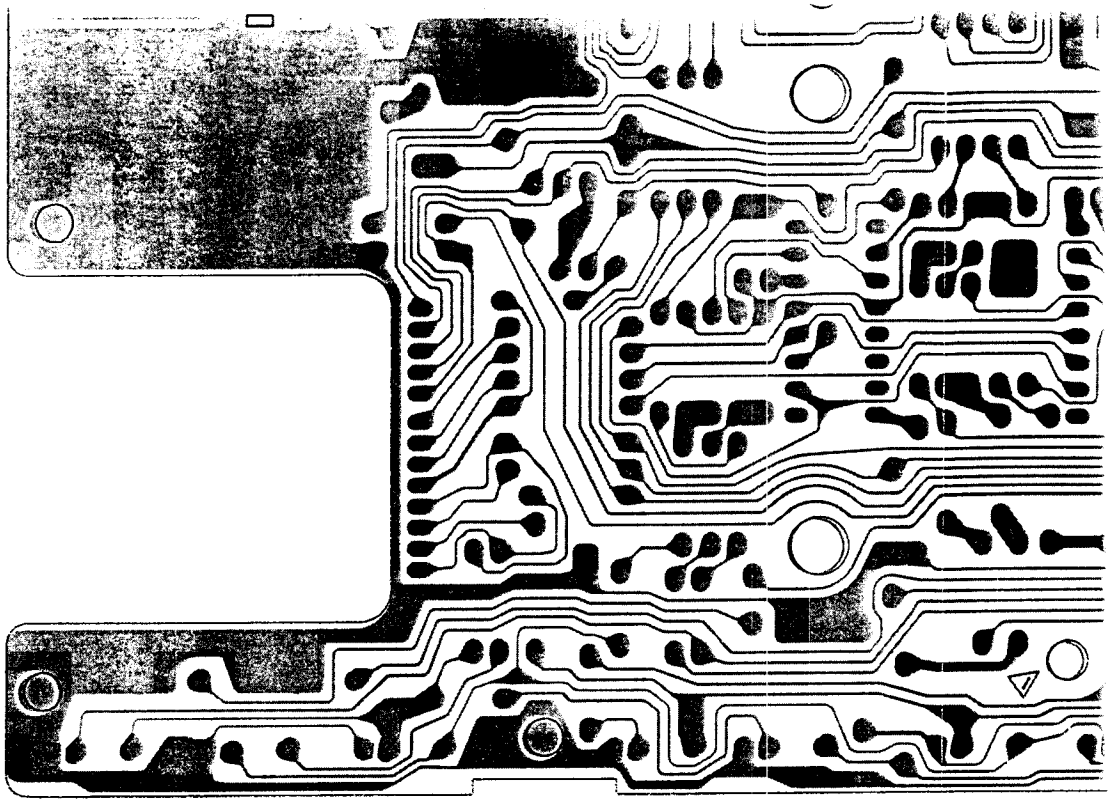

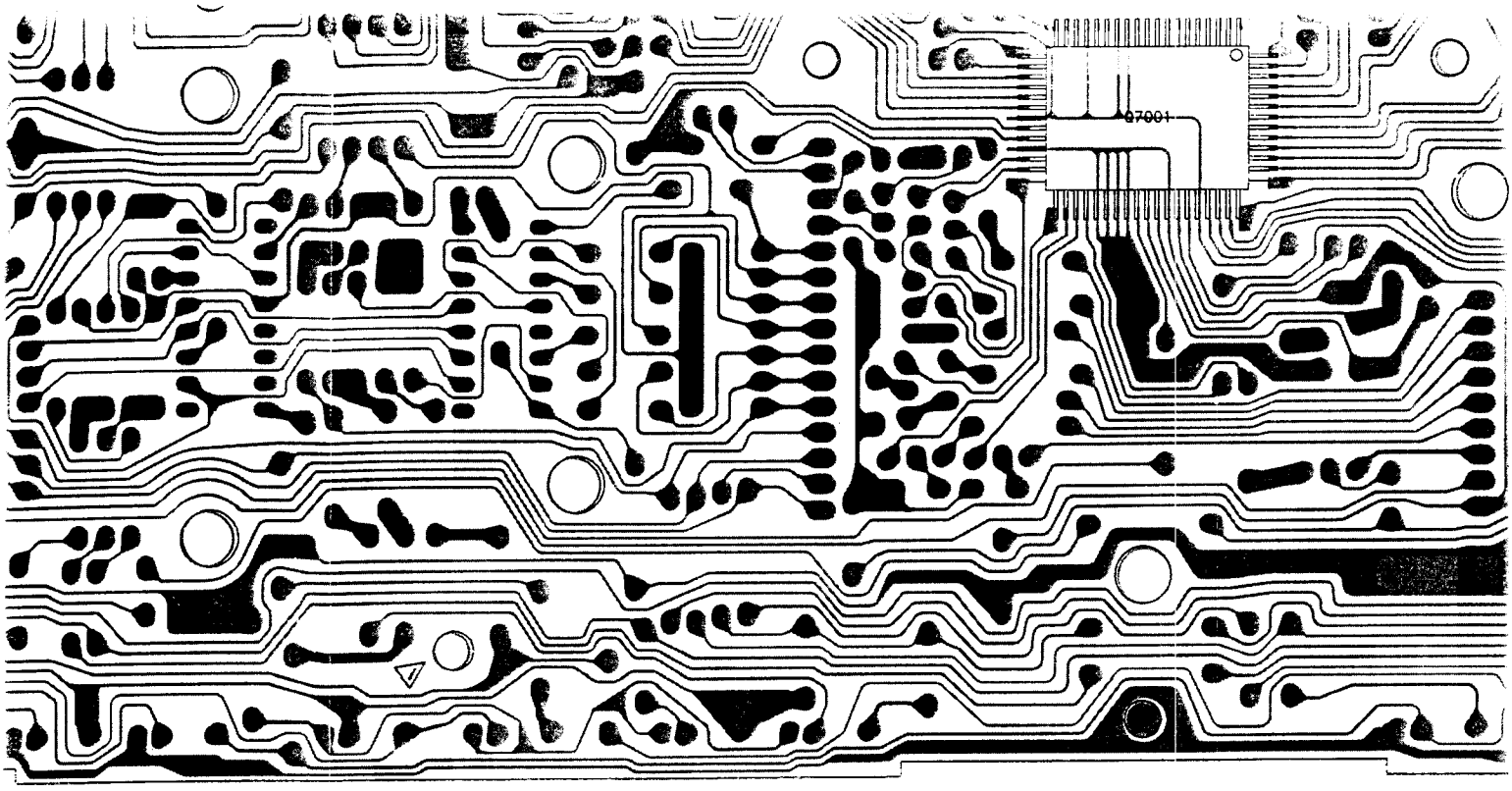
Q7001

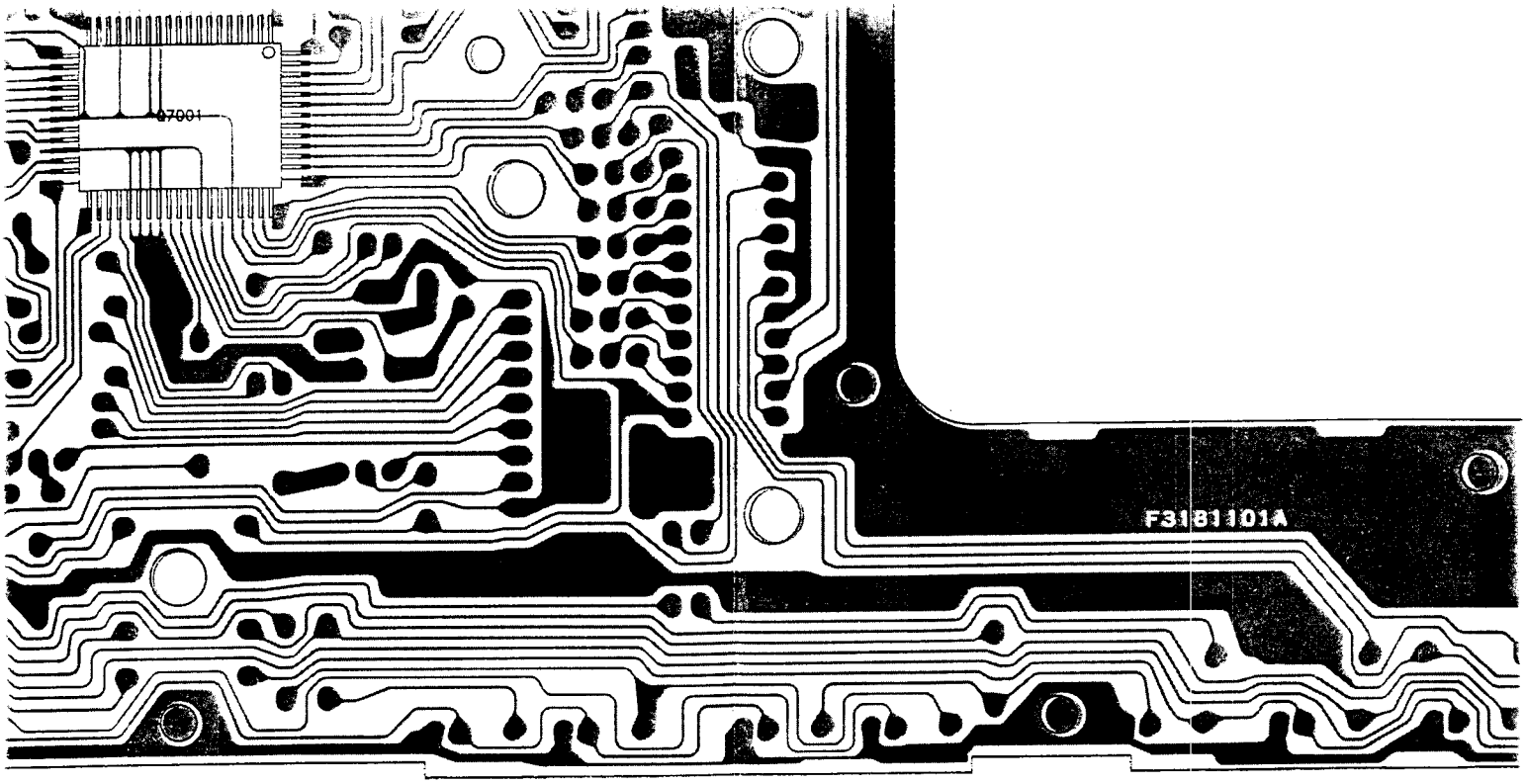
Q7001
F3181101A

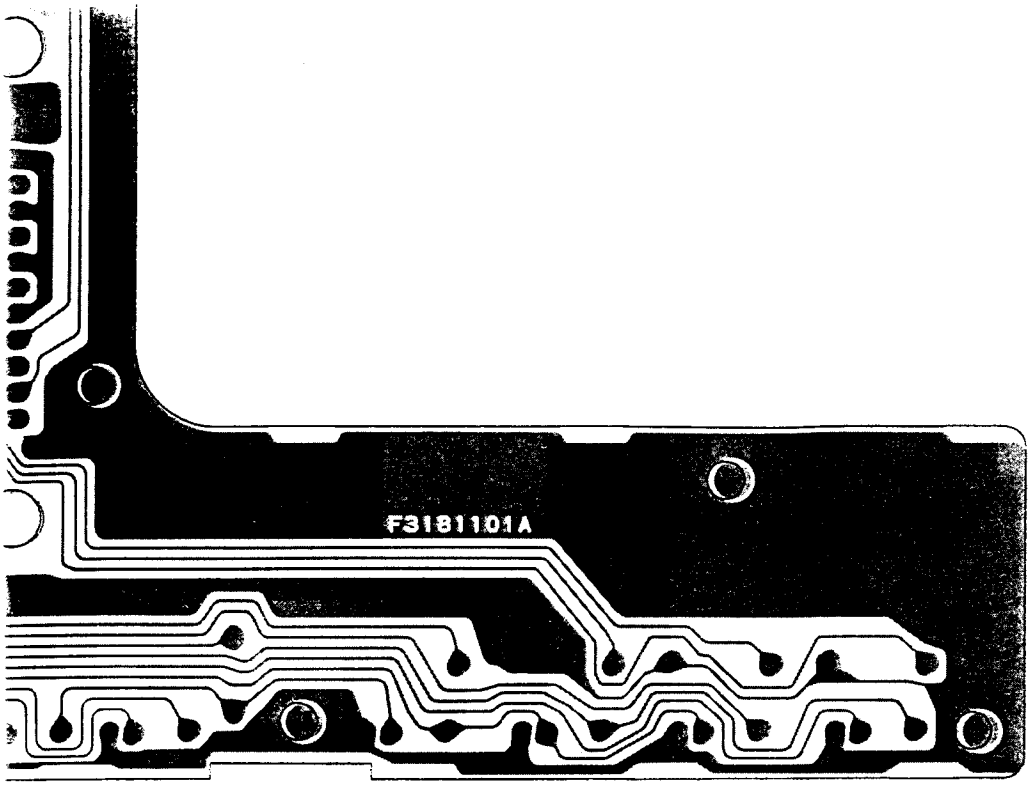

("chip only" side)

REF.	YAESU P/N	DESCRIPTION	MFGR'S DESIG	VALUE	WV	TOL.	VERS.
		*** DISPLAY UNIT ***					
	CA0262001	P.C.B. W COMP.					
	F3181101A	P.C.B. W/O COMP.					
C 7001	K26170079	CERAMIC CAP.	DD104-289SL330J50	33pF	50V	SL	
C 7002	K26170079	CERAMIC CAP.	DD104-289SL330J50	33pF	50V	SL	
C 7003	K50177683	FILM CAP.	50F2U683M	0.068	50V		
C 7005	K46170024	AL. ELECTRO. CAP.	50V470M6X11TR5	47uF	50V		
C 7006	K40129048	AL. ELECTRO. CAP.	RE2-16V221M	220uF	16V		
C 7007	K28129001	CERAMIC CAP.	EP050Y103N-A	0.01uF	16V	Y	
C 7008	K28179002	CERAMIC CAP.	UP050F473Z-A-B	0.047uF	50V	F	
C 7009	K46120004	AL. ELECTRO. CAP.	16V100M4X7TR2	10uF	16V		
C 7010	K28129001	CERAMIC CAP.	EP050Y103N-A	0.01uF	16V	Y	
C 7011	K28129001	CERAMIC CAP.	EP050Y103N-A	0.01uF	16V	Y	
C 7012	K28129001	CERAMIC CAP.	EP050Y103N-A	0.01uF	16V	Y	
C 7013	K28129001	CERAMIC CAP.	EP050Y103N-A	0.01uF	16V	Y	
C 7014	K40129048	AL. ELECTRO. CAP.	RE2-16V221M	220uF	16V		
C 7015	K46120004	AL. ELECTRO. CAP.	16V100M4X7TR2	10uF	16V		
D 7001	G2050011	LED	LT3N44D				
D 7002	G2050011	LED	LT3N44D				
D 7003	G2050011	LED	LT3N44D				
D 7004	G2050012	LED	LT3S44D				
D 7005	G2050011	LED	LT3N44D				
D 7006	G2050011	LED	LT3N44D				
D 7007	G2050011	LED	LT3N44D				
D 7008	G2050010	LED	LT3P44D				
D 7009	G2050010	LED	LT3P44D				
D 7010	G2050012	LED	LT3S44D				
D 7011	G2050011	LED	LT3N44D				
D 7012	G2060004	DIODE	1SS270TJ				
D 7013	G2060004	DIODE	1SS270TJ				
D 7014	G2060004	DIODE	1SS270TJ				
D 7015	G2060004	DIODE	1SS270TJ				
D 7016	G2060004	DIODE	1SS270TJ				
D 7017	G2060004	DIODE	1SS270TJ				
D 7018	G2060004	DIODE	1SS270TJ				
D 7019	G2060004	DIODE	1SS270TJ				
D 7020	G2060004	DIODE	1SS270TJ				
D 7021	G2060004	DIODE	1SS270TJ				
D 7022	G2060004	DIODE	1SS270TJ				
D 7023	G2060004	DIODE	1SS270TJ				
D 7024	G2060004	DIODE	1SS270TJ				
D 7025	G2060004	DIODE	1SS270TJ				
D 7026	G2060004	DIODE	1SS270TJ				
D 7027	G2060004	DIODE	1SS270TJ				
D 7028	G2060004	DIODE	1SS270TJ				
D 7029	G2060004	DIODE	1SS270TJ				
D 7030	G2060004	DIODE	1SS270TJ				
D 7031	G2060004	DIODE	1SS270TJ				
D 7032	G2060004	DIODE	1SS270TJ				
D 7033	G2060004	DIODE	1SS270TJ				
D 7034	G2060004	DIODE	1SS270TJ				

Display Unit

REF.	YAESU P/N	DESCRIPTION	MFGR'S DESIG	VALUE	WV	TOL.	VERS.
D 7035	G2060004	DIODE	1SS270TJ				
D 7036	G2050007	DIODE	1SS83RE				
D 7037	G2050007	DIODE	1SS83RE				
D 7038	G2050007	DIODE	1SS83RE				
D 7039	G2050007	DIODE	1SS83RE				
D 7040	G2090154	DIODE	RD7.5EB1				
DS7001	G6090081	FCD	FIP14DM9				
J 7003	P0090774	CONNECTOR	SB15P-HVQ-A				
J 7005	P0090773	CONNECTOR	SB09P-HVQ-A				
JP7001	T9206021	WIRE-ASSY					
JP7002	T9206020	WIRE-ASSY					
JP7004	T9206019	WIRE-ASSY					
L 7001	L1190382	M.RFC	RCR-875D-222K	2.2m			
L 7002	L1790070	M.RFC	LAP02TA101K	100uH			
Q 7001	G1091170	IC	HD404728A22FS				
Q 7002	G3050003	TRANSISTOR	BA1A4P-T				
Q 7003	G3050003	TRANSISTOR	BA1A4P-T				
Q 7004	G3050003	TRANSISTOR	BA1A4P-T				
Q 7005	G3050003	TRANSISTOR	BA1A4P-T				
Q 7006	G3050003	TRANSISTOR	BA1A4P-T				
Q 7007	G3050003	TRANSISTOR	BA1A4P-T				
Q 7008	G3050003	TRANSISTOR	BA1A4P-T				
Q 7009	G3050003	TRANSISTOR	BA1A4P-T				
Q 7010	G3050003	TRANSISTOR	BA1A4P-T				
Q 7011	G3050003	TRANSISTOR	BA1A4P-T				
Q 7012	G3050003	TRANSISTOR	BA1A4P-T				
Q 7013	G3050003	TRANSISTOR	BA1A4P-T				
Q 7014	G3050003	TRANSISTOR	BA1A4P-T				
Q 7015	G3050003	TRANSISTOR	BA1A4P-T				
Q 7016	G3050003	TRANSISTOR	BA1A4P-T				
Q 7017	G3050003	TRANSISTOR	BA1A4P-T				
Q 7018	G3050003	TRANSISTOR	BA1A4P-T				
Q 7019	G3050003	TRANSISTOR	BA1A4P-T				
Q 7020	G3050003	TRANSISTOR	BA1A4P-T				
Q 7021	G3050003	TRANSISTOR	BA1A4P-T				
Q 7022	G3050003	TRANSISTOR	BA1A4P-T				
Q 7023	G3050003	TRANSISTOR	BA1A4P-T				
Q 7024	G1090088	IC	MC14028BCP				
Q 7025	G1090088	IC	MC14028BCP				
Q 7026	G3050003	TRANSISTOR	BA1A4P-T				
Q 7028	G3406670C	TRANSISTOR	2SD667C				
Q 7029	G3406670C	TRANSISTOR	2SD667C				
R 7001	J07225473	CARBON FILM RES.	RD16TPJ473	47K	1/6W		
R 7002	J07225473	CARBON FILM RES.	RD16TPJ473	47K	1/6W		
R 7003	J07225473	CARBON FILM RES.	RD16TPJ473	47K	1/6W		
R 7004	J07225473	CARBON FILM RES.	RD16TPJ473	47K	1/6W		
R 7005	J07225473	CARBON FILM RES.	RD16TPJ473	47K	1/6W		
R 7006	J07225473	CARBON FILM RES.	RD16TPJ473	47K	1/6W		
R 7007	J07225473	CARBON FILM RES.	RD16TPJ473	47K	1/6W		

REF.	YAESU P/N	DESCRIPTION	MFGR'S DESIG	VALUE	WV	TOL.	VERS.
R 7008	J07225473	CARBON FILM RES.	RD16TPJ473	47K	1/6W		
R 7009	J07225473	CARBON FILM RES.	RD16TPJ473	47K	1/6W		
R 7010	J07225473	CARBON FILM RES.	RD16TPJ473	47K	1/6W		
R 7011	J07225473	CARBON FILM RES.	RD16TPJ473	47K	1/6W		
R 7012	J07225473	CARBON FILM RES.	RD16TPJ473	47K	1/6W		
R 7013	J07225473	CARBON FILM RES.	RD16TPJ473	47K	1/6W		
R 7014	J07225473	CARBON FILM RES.	RD16TPJ473	47K	1/6W		
R 7015	J07225473	CARBON FILM RES.	RD16TPJ473	47K	1/6W		
R 7016	J07225473	CARBON FILM RES.	RD16TPJ473	47K	1/6W		
R 7017	J07225473	CARBON FILM RES.	RD16TPJ473	47K	1/6W		
R 7018	J07225473	CARBON FILM RES.	RD16TPJ473	47K	1/6W		
R 7019	J07225473	CARBON FILM RES.	RD16TPJ473	47K	1/6W		
R 7020	J07225473	CARBON FILM RES.	RD16TPJ473	47K	1/6W		
R 7021	J07225473	CARBON FILM RES.	RD16TPJ473	47K	1/6W		
R 7022	J07225473	CARBON FILM RES.	RD16TPJ473	47K	1/6W		
R 7023	J07225105	CARBON FILM RES.	RD16TPJ105	1M	1/6W		
R 7024	J07225473	CARBON FILM RES.	RD16TPJ473	47K	1/6W		
R 7025	J07225473	CARBON FILM RES.	RD16TPJ473	47K	1/6W		
R 7026	J07225151	CARBON FILM RES.	RD16TPJ151	150	1/6W		
R 7027	J07225151	CARBON FILM RES.	RD16TPJ151	150	1/6W		
R 7028	J07225151	CARBON FILM RES.	RD16TPJ151	150	1/6W		
R 7029	J07225151	CARBON FILM RES.	RD16TPJ151	150	1/6W		
R 7030	J07225151	CARBON FILM RES.	RD16TPJ151	150	1/6W		
R 7031	J07225151	CARBON FILM RES.	RD16TPJ151	150	1/6W		
R 7032	J07225151	CARBON FILM RES.	RD16TPJ151	150	1/6W		
R 7033	J07225561	CARBON FILM RES.	RD16TPJ561	560	1/6W		
R 7034	J07225561	CARBON FILM RES.	RD16TPJ561	560	1/6W		
R 7035	J07225151	CARBON FILM RES.	RD16TPJ151	150	1/6W		
R 7036	J07225151	CARBON FILM RES.	RD16TPJ151	150	1/6W		
R 7037	J07225181	CARBON FILM RES.	RD16TPJ181	180	1/6W		
R 7038	J07225181	CARBON FILM RES.	RD16TPJ181	180	1/6W		
R 7039	J07225181	CARBON FILM RES.	RD16TPJ181	180	1/6W		
R 7040	J07225181	CARBON FILM RES.	RD16TPJ181	180	1/6W		
R 7041	J07225181	CARBON FILM RES.	RD16TPJ181	180	1/6W		
R 7042	J07225181	CARBON FILM RES.	RD16TPJ181	180	1/6W		
R 7043	J07225181	CARBON FILM RES.	RD16TPJ181	180	1/6W		
R 7044	J07225473	CARBON FILM RES.	RD16TPJ473	47K	1/6W		
R 7047	J07225181	CARBON FILM RES.	RD16TPJ181	180	1/6W		
R 7048	J07225181	CARBON FILM RES.	RD16TPJ181	180	1/6W		
R 7049	J07225181	CARBON FILM RES.	RD16TPJ181	180	1/6W		
R 7050	J07225181	CARBON FILM RES.	RD16TPJ181	180	1/6W		
R 7051	J07225332	CARBON FILM RES.	RD16TPJ332	3.3K	1/6W		
R 7052	J07225473	CARBON FILM RES.	RD16TPJ473	47K	1/6W		
R 7053	J07225473	CARBON FILM RES.	RD16TPJ473	47K	1/6W		
R 7054	J07225473	CARBON FILM RES.	RD16TPJ473	47K	1/6W		
R 7055	J07225473	CARBON FILM RES.	RD16TPJ473	47K	1/6W		
R 7056	J07225473	CARBON FILM RES.	RD16TPJ473	47K	1/6W		
R 7057	J07225479	CARBON FILM RES.	RD16TPJ4R7	4.7	1/6W		
R 7058	J07225479	CARBON FILM RES.	RD16TPJ4R7	4.7	1/6W		
R 7059	J07225479	CARBON FILM RES.	RD16TPJ4R7	4.7	1/6W		
R 7060	J07225479	CARBON FILM RES.	RD16TPJ4R7	4.7	1/6W		
R 7061	J01275100	CARBON FILM RES.	RD12TJ100	10	1/2W		
R 7062	J07225104	CARBON FILM RES.	RD16TPJ104	100K	1/6W		
S 7001	N5090047	TACT SWITCH	EVQ-333 H=9.5				

Display Unit

REF.	YAESU P/N	DESCRIPTION	MFGR'S DESIG	VALUE	WV	TOL.	VERS.
S 7002	N5090047	TACT SWITCH	EVQ-333 H=9.5				
S 7003	N5090047	TACT SWITCH	EVQ-333 H=9.5				
S 7004	N5090047	TACT SWITCH	EVQ-333 H=9.5				
S 7005	N5090047	TACT SWITCH	EVQ-333 H=9.5				
S 7006	N5090047	TACT SWITCH	EVQ-333 H=9.5				
S 7007	N5090047	TACT SWITCH	EVQ-333 H=9.5				
S 7008	N5090047	TACT SWITCH	EVQ-333 H=9.5				
S 7009	N5090047	TACT SWITCH	EVQ-333 H=9.5				
S 7010	N5090047	TACT SWITCH	EVQ-333 H=9.5				
S 7011	N5090047	TACT SWITCH	EVQ-333 H=9.5				
S 7012	N5090047	TACT SWITCH	EVQ-333 H=9.5				
S 7013	N5090047	TACT SWITCH	EVQ-333 H=9.5				
S 7014	N5090047	TACT SWITCH	EVQ-333 H=9.5				
S 7015	N5090047	TACT SWITCH	EVQ-333 H=9.5				
S 7016	N5090047	TACT SWITCH	EVQ-333 H=9.5				
S 7017	N5090047	TACT SWITCH	EVQ-333 H=9.5				
S 7018	N5090047	TACT SWITCH	EVQ-333 H=9.5				
S 7019	N5090047	TACT SWITCH	EVQ-333 H=9.5				
S 7020	N5090047	TACT SWITCH	EVQ-333 H=9.5				
S 7021	N5090047	TACT SWITCH	EVQ-333 H=9.5				
S 7022	N5090047	TACT SWITCH	EVQ-333 H=9.5				
S 7023	N5090047	TACT SWITCH	EVQ-333 H=9.5				
T 7001	L3030136	TRANS.	2890 EI-127				
X 7001	H7900170	CERAMIC OSC	CSA4.00MG5				
	R0136910	SHIELD CASE					
	S6000233	CIRCUIT BOARD SPACER	RSPLS-12L				
	S6000234	CIRCUIT BOARD SPACER	RSPS-12L				
	R3131740	FIP HOLDER					
	R3131750	FIP HOLDER					

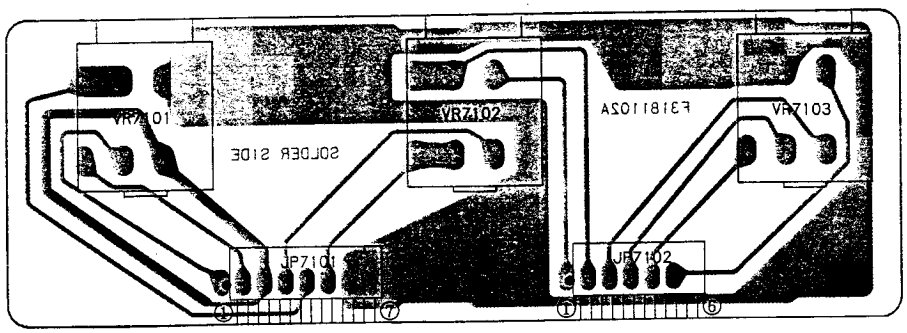

("component" side)

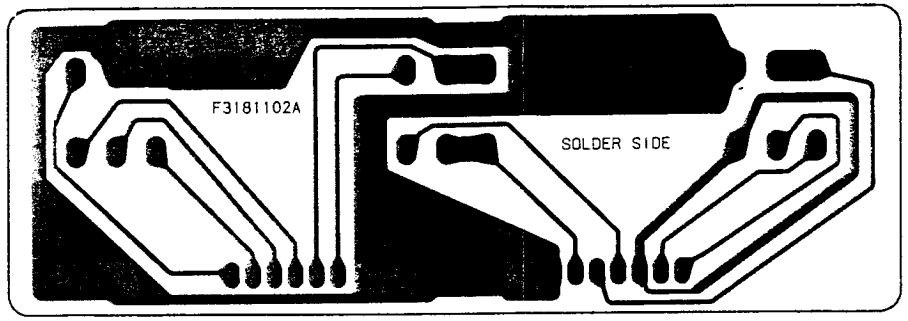

("solder" side)

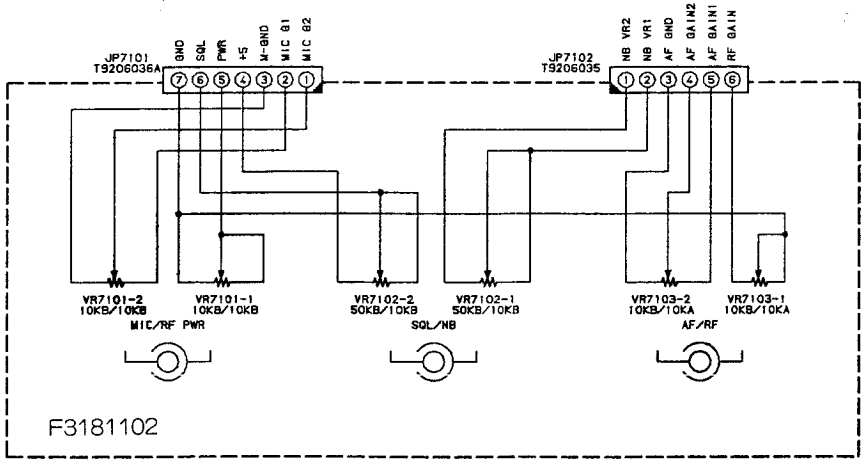

REF.	YAESU P/N	DESCRIPTION	MFGR'S DESIG	VALUE	WV	TOL.	VERS.
		*** VR UNIT ***					
	CA0417001	P.C.B. W COMP.					
	F3181102	P.C.B. W/O COMP.					
JP7101	T9206036A	WIRE-ASSY					
JP7102	T9206035	WIRE-ASSY					
VR7101	J62800105	POT.	RK12	10KB/10KB			
VR7102	J62800109	POT.	RK1242210	50KB/10KB			
VR7103	J62800110	POT.	RK12	10KB/10KA			
	R0136870	FITTING					

Notes:

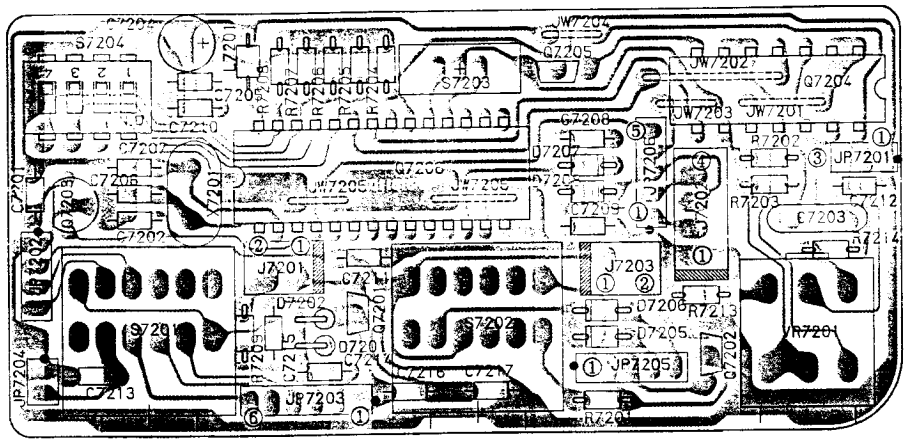

("component" side)

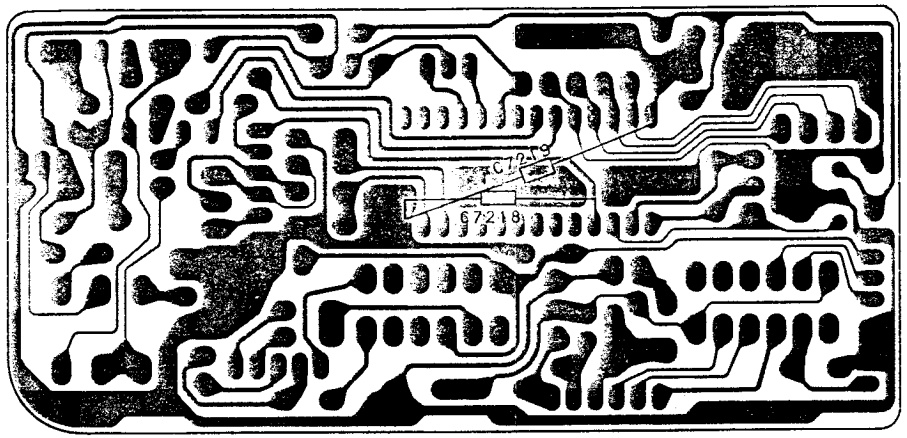

("chip only" side)

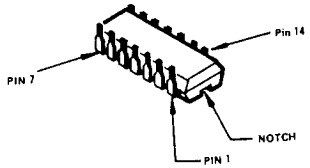

μPD4011BC
(Q7204)
MB8854-1244M
(Q7206)

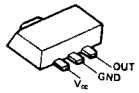

M51943BSL (A4)
(Q7203)

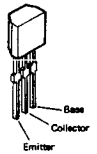

BA1A4P
(Q7201, 7202, 7205)

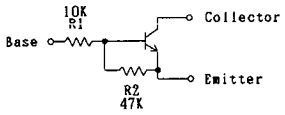

BA1A4P CIRCUIT DIAGRAM

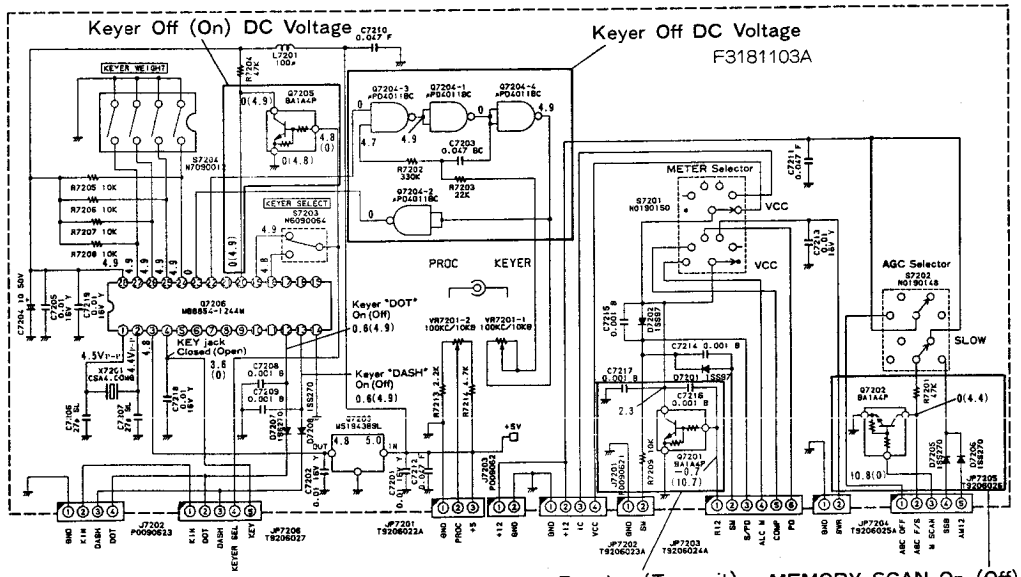

Measuring Conditions
METER Selector: VCC
AGC Selector: SLOW
Keyer Weight Switches: all Off
Keyer Selector Switch: position "2"

Receive (Transmit) DC Voltage

MEMORY SCAN On (Off) DC Voltage

REF.	YAESU P/N	DESCRIPTION	MFGR'S DESIG	VALUE	WV	TOL.	VERS.
		*** SW A UNIT ***					
	CA0416001	P.C.B. W COMP.					
	F3181103A	P.C.B. W/O COMP.					
C 7201	K28129001	CERAMIC CAP.	EP050Y103N-A	0.01uF	16V	Y	
C 7202	K28129001	CERAMIC CAP.	EP050Y103N-A	0.01uF	16V	Y	
C 7203	K26170758	CERAMIC CAP.	DD310-979BC473M50	0.047uF	50V	BC	
C 7204	K46170021	AL.ELECTRO.CAP.	50V100M5X11TR5	10uF	50V		
C 7205	K28129001	CERAMIC CAP.	EP050Y103N-A	0.01uF	16V	Y	
C 7206	K28179028	CERAMIC CAP.	UP050SL270J-A-B	27pF	50V	SL	
C 7207	K28179028	CERAMIC CAP.	UP050SL270J-A-B	27pF	50V	SL	
C 7208	K28179001	CERAMIC CAP.	UP050B102K-A-B	0.001uF	50V	B	
C 7209	K28179001	CERAMIC CAP.	UP050B102K-A-B	0.001uF	50V	B	
C 7210	K28179002	CERAMIC CAP.	UP050F473Z-A-B	0.047uF	50V	F	
C 7211	K28179002	CERAMIC CAP.	UP050F473Z-A-B	0.047uF	50V	F	
C 7212	K28179002	CERAMIC CAP.	UP050F473Z-A-B	0.047uF	50V	F	
C 7213	K28129001	CERAMIC CAP.	EP050Y103N-A	0.01uF	16V	Y	
C 7214	K28179001	CERAMIC CAP.	UP050B102K-A-B	0.001uF	50V	B	
C 7215	K28179001	CERAMIC CAP.	UP050B102K-A-B	0.001uF	50V	B	
C 7216	K28179001	CERAMIC CAP.	UP050B102K-A-B	0.001uF	50V	B	
C 7217	K28179001	CERAMIC CAP.	UP050B102K-A-B	0.001uF	50V	B	
C 7218	K28129001	CERAMIC CAP.	EP050Y103N-A	0.01uF	16V	Y	
C 7219	K28129001	CERAMIC CAP.	EP050Y103N-A	0.01uF	16V	Y	
D 7201	G2090118	DIODE	1SS97				
D 7202	G2090118	DIODE	1SS97				
D 7205	G2060004	DIODE	1SS270TJ				
D 7206	G2060004	DIODE	1SS270TJ				
D 7207	G2060004	DIODE	1SS270TJ				
D 7208	G2060004	DIODE	1SS270TJ				
J 7201	P0090621	CONNECTOR	SC25-02WS				
J 7202	P0090623	CONNECTOR	SC25-04WS				
J 7203	P0090621	CONNECTOR	SC25-02WS				
JP7201	T9206022A	WIRE-ASSY					
JP7202	T9206023A	WIRE-ASSY					
JP7203	T9206024A	WIRE-ASSY					
JP7204	T9206025A	WIRE-ASSY					
JP7205	T9206026	WIRE-ASSY					
JP7206	T9206027	WIRE-ASSY					
L 7201	L1790070	M.RFC	LAP02TA101K	100uH			
Q 7201	G3050003	TRANSISTOR	BA1A4P-T				
Q 7202	G3050003	TRANSISTOR	BA1A4P-T				
Q 7203	G1090840	IC	M51943BSL				
Q 7204	G1090282	IC	UPD4011BC				
Q 7205	G3050003	TRANSISTOR	BA1A4P-T				
Q 7206	G1090999	IC	MB8854-1244M				
R 7201	J07225473	CARBON FILM RES.	RD16TPJ473	47K	1/6W		
R 7202	J07225334	CARBON FILM RES.	RD16TPJ334	330K	1/6W		

Switch A (SW-A) Unit

REF.	YAESU P/N	DESCRIPTION	MFGR'S DESIG	VALUE	WV	TOL.	VERS.
R 7203	J07225223	CARBON FILM RES.	RD16TPJ223	22K	1/6W		
R 7204	J07225473	CARBON FILM RES.	RD16TPJ473	47K	1/6W		
R 7205	J07225103	CARBON FILM RES.	RD16TPJ103	10K	1/6W		
R 7206	J07225103	CARBON FILM RES.	RD16TPJ103	10K	1/6W		
R 7207	J07225103	CARBON FILM RES.	RD16TPJ103	10K	1/6W		
R 7208	J07225103	CARBON FILM RES.	RD16TPJ103	10K	1/6W		
R 7209	J07225103	CARBON FILM RES.	RD16TPJ103	10K	1/6W		
R 7213	J07225222	CARBON FILM RES.	RD16TPJ222	2.2K	1/6W		
R 7214	J07225472	CARBON FILM RES.	RD16TPJ472	4.7K	1/6W		
S 7201	N0190150	ROTARY SWITCH	SRBU16				
S 7202	N0190148	ROTARY SWITCH	SRBU14				
S 7203	N6090064	SLIDE SWITCH	SS912				
S 7204	N7090012	DIP SWITCH	SCS-04A R66-3245				
VR7201	J62800107	POT.	RK1242210	100KC/10KB			
X 7201	H7900170	CERAMIC OSC	CSA4.00MG5				
	R0136880	FITTING					

SOLDER SIDE
D7305
D7306
D7307
D7308
D7309
D7310
D7311
S7313
S7314
S7315
S7316
S7317
S7318
S7319
S7325
JW7301
JW7302
JW7303
JW7304
JW7305
JW7306
JW7307
JW7308
JW7309
JW7325
J7301
⑨
①

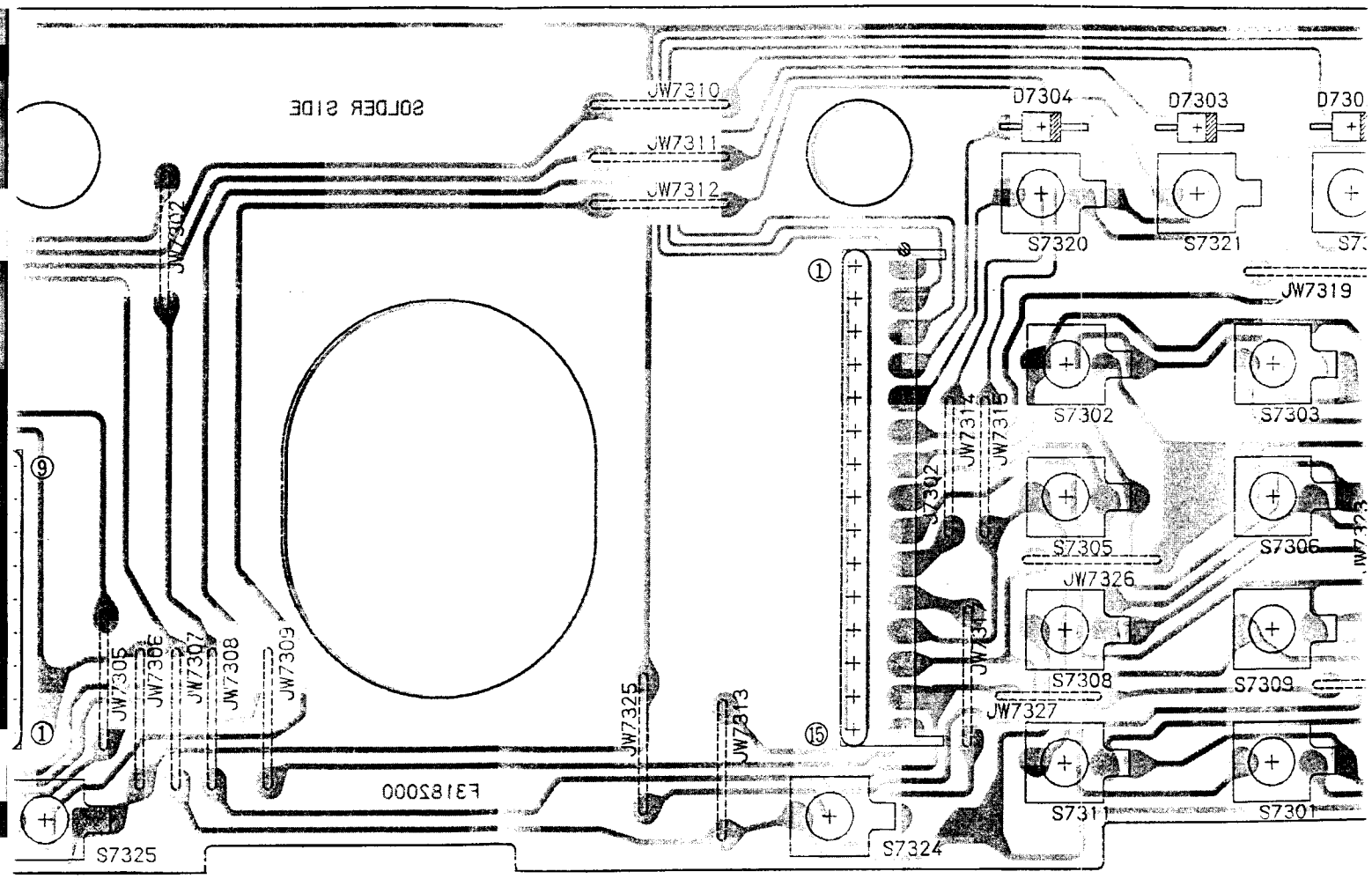
SOLDER SIDE
JW7310
JW7311
JW7312
JW7302
D7304
D7303
S7320
S7321
JW7319
S7302
S7303
S7305
S7306
JW7326
S7308
S7309
JW7327
S7311
S7301
S7324
S7325
JW7325
JW7313
JW7305
JW7306
JW7307
JW7308
JW7309
F31B2000

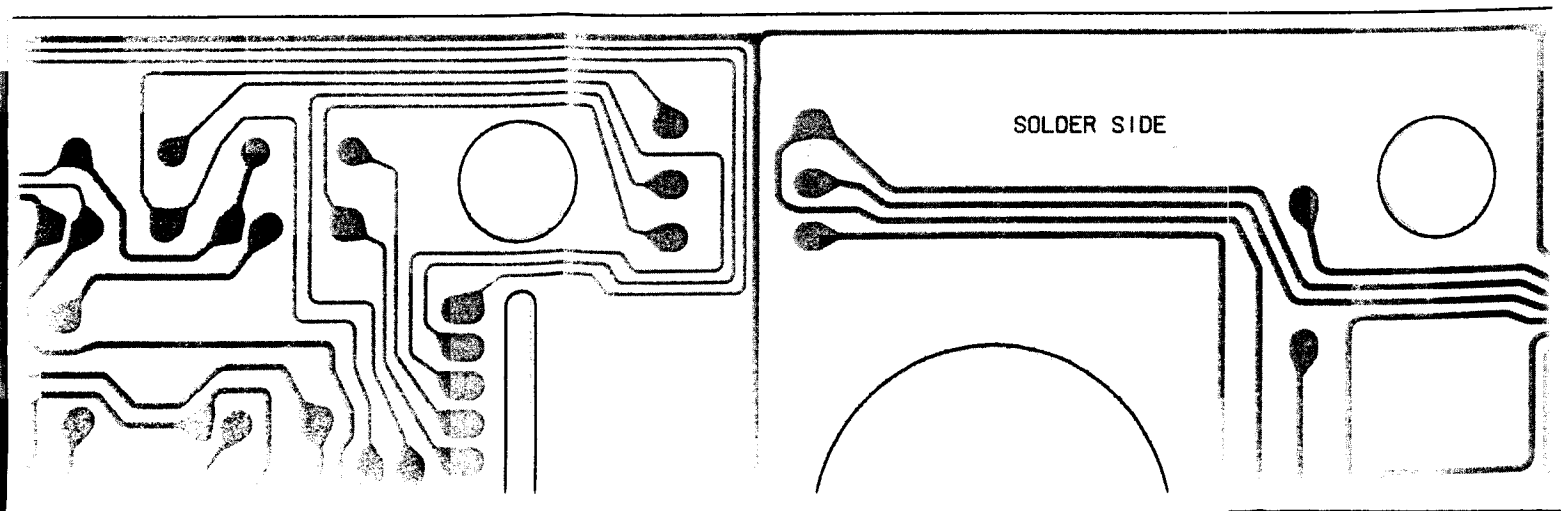
SOLDER SIDE

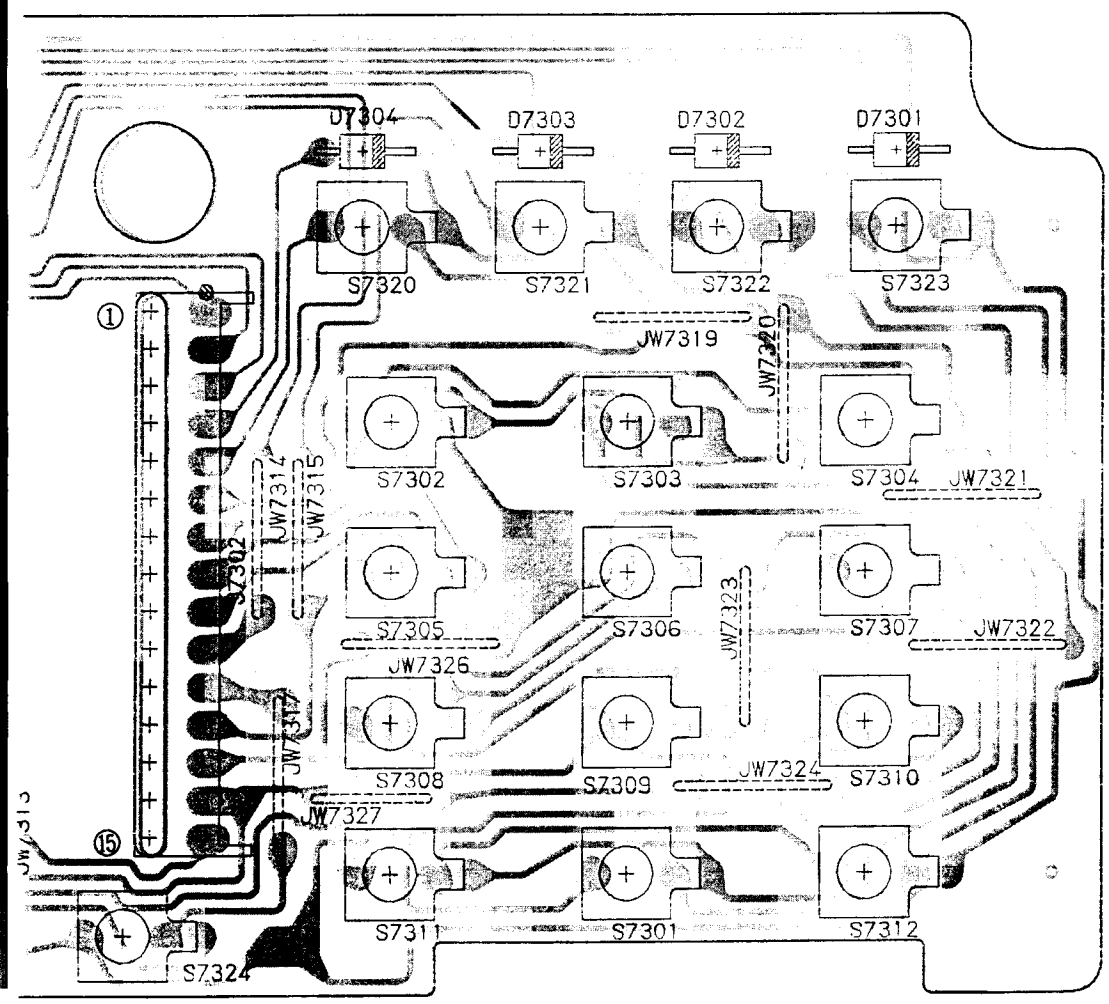

("component" side)

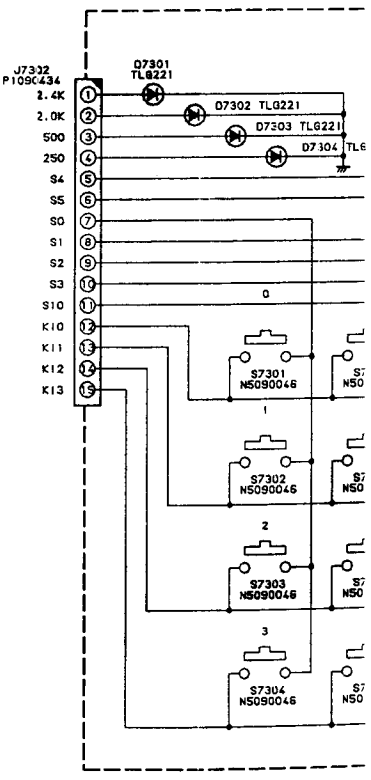

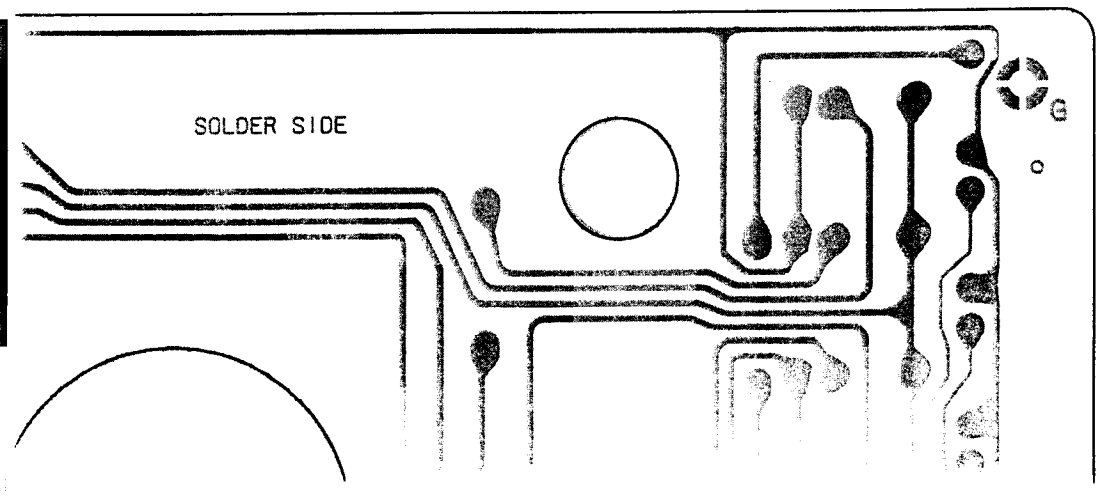

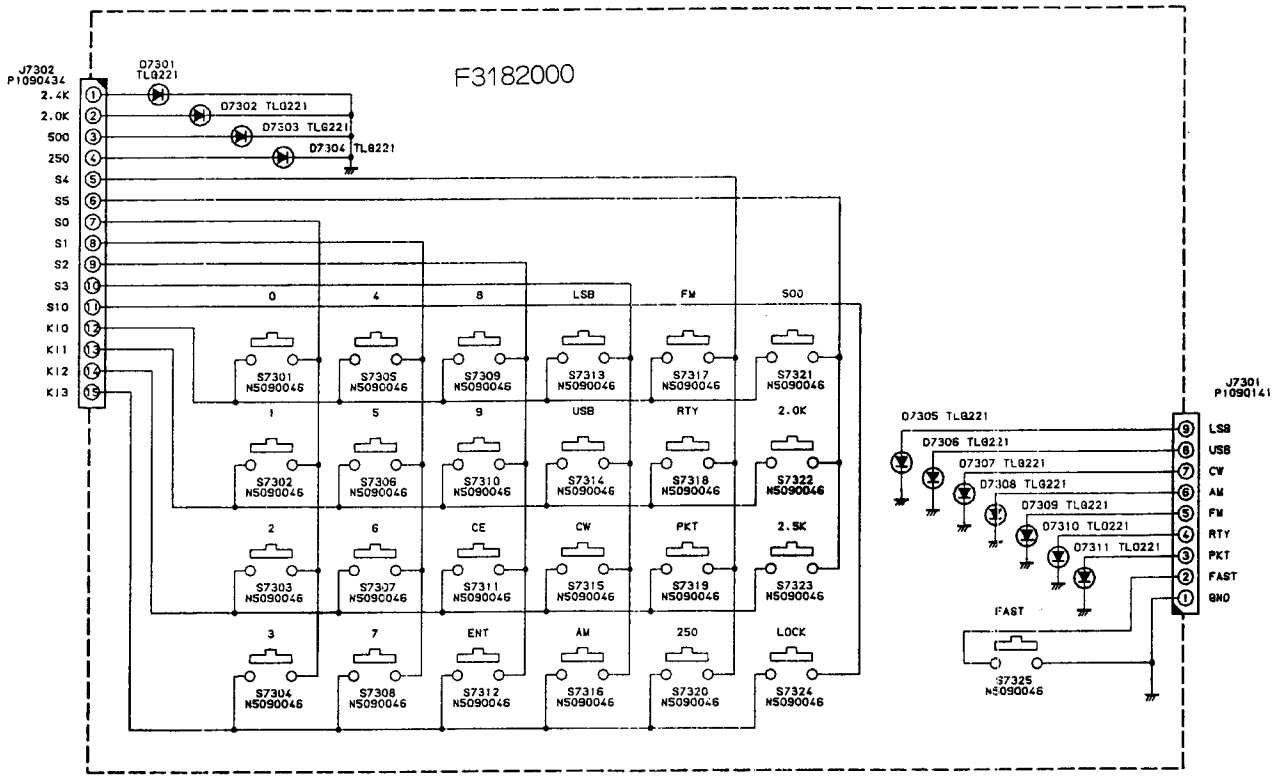
F3182000
J7302
P1090434
2.4K
2.0K
500
250
S4
S5
S0
S1
S2
S3
S10
K10
K11
K12
K13
D7301 TLQ221
D7302 TLQ221
D7303 TLQ221
D7304 TLQ221
0
4
8
LSB
FM
500
1
5
9
USB
RTY
2.0K
2
6
CE
CW
PKT
2.5K
3
7
ENT
AM
250
LOCK
S7301 NS090046
S7305 NS090046
S7309 NS090046
S7313 NS090046
S7317 NS090046
S7321 NS090046
S7302 NS090046
S7306 NS090046
S7310 NS090046
S7314 NS090046
S7318 NS090046
S7322 NS090046
S7303 NS090046
S7307 NS090046
S7311 NS090046
S7315 NS090046
S7319 NS090046
S7323 NS090046
S7304 NS090046
S7308 NS090046
S7312 NS090046
S7316 NS090046
S7320 NS090046
S7324 NS090046
D7305 TLQ221
D7306 TLQ221
D7307 TLQ221
D7308 TLQ221
D7309 TLQ221
D7310 TLQ221
D7311 TLQ221
FAST
S7325 NS090046
J7301
P1090141
LSB
USB
CW
AM
FM
RTY
PKT
FAST
GND

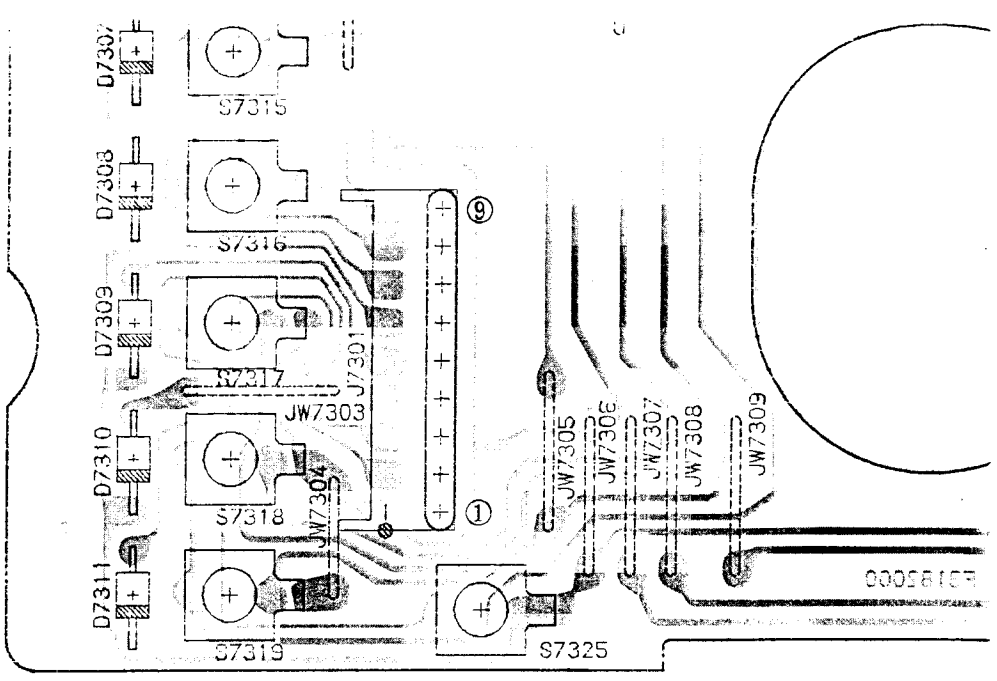
D7307
S7315
D7308
S7316
D7309
S7317
J7301
JW7303
D7310
S7318
JW7304
D7311
S7319
S7325
⑨
①
JW7305
JW7306
JW7307
JW7308
JW7309

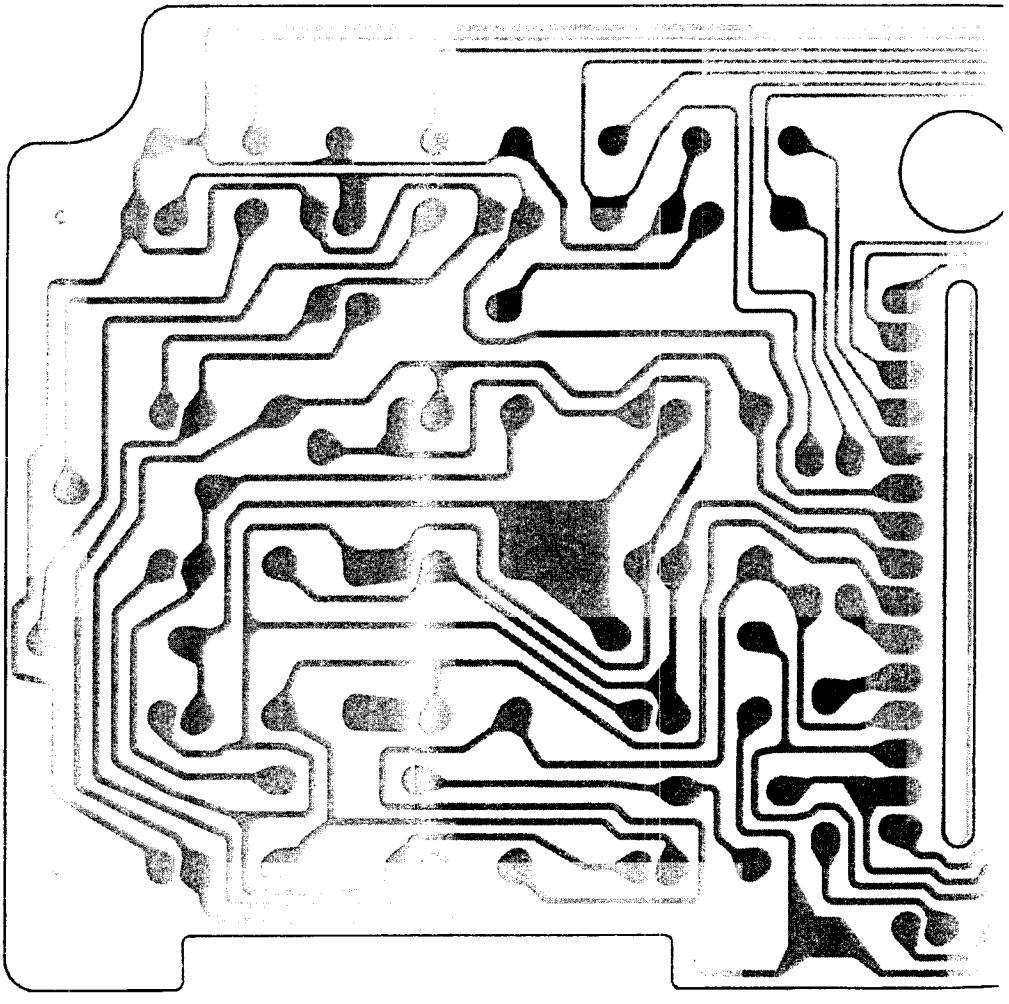

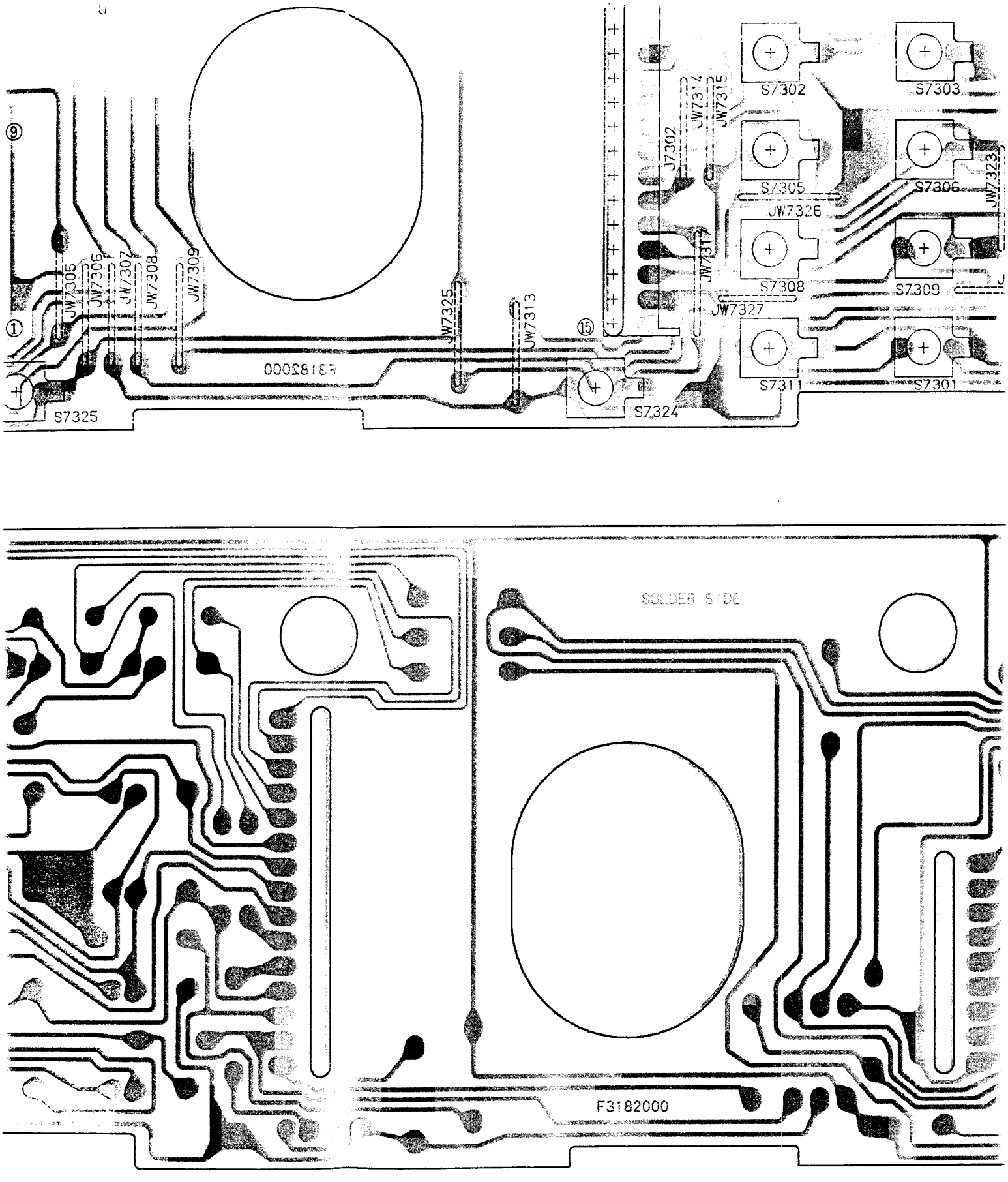
⑨
①
⑮
JW7305
JW7306
JW7307
JW7308
JW7309
JW7325
JW7313
JW7302
JW7314
JW7315
JW7317
JW7326
JW7327
JW7323
S7302
S7303
S7305
S7306
S7308
S7309
S7311
S7301
S7325
S7324
F3182000
SOLDER SIDE
F3182000

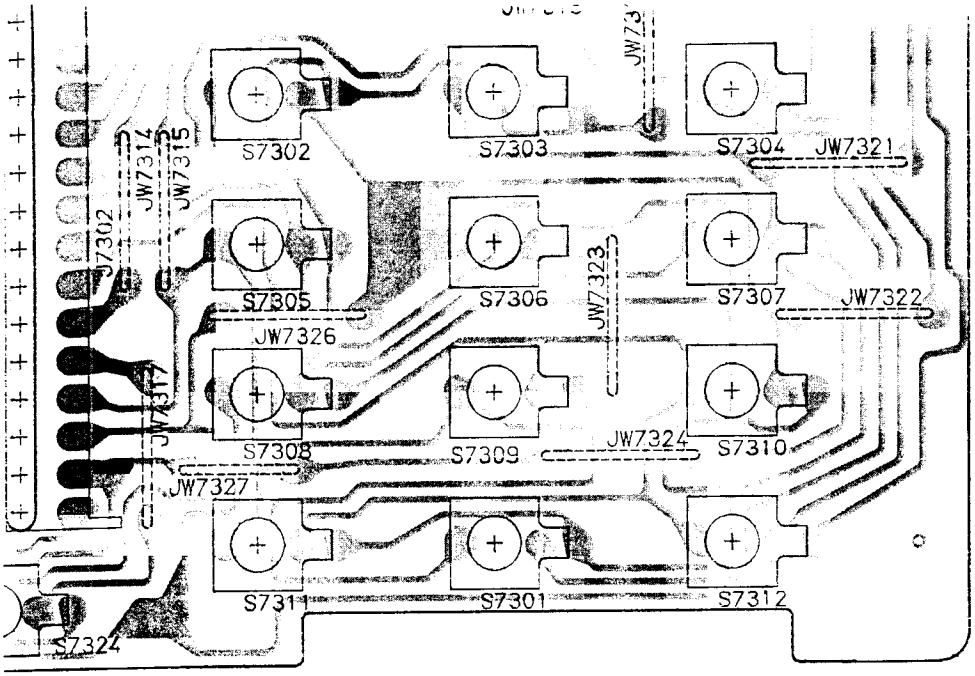

("component" side)

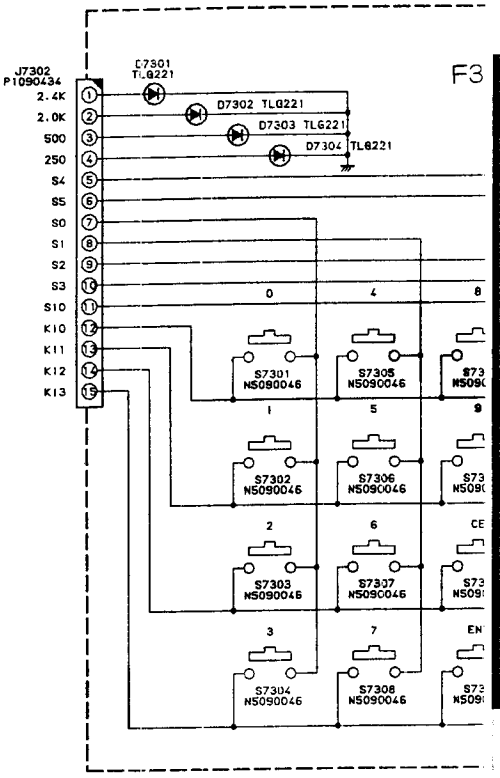

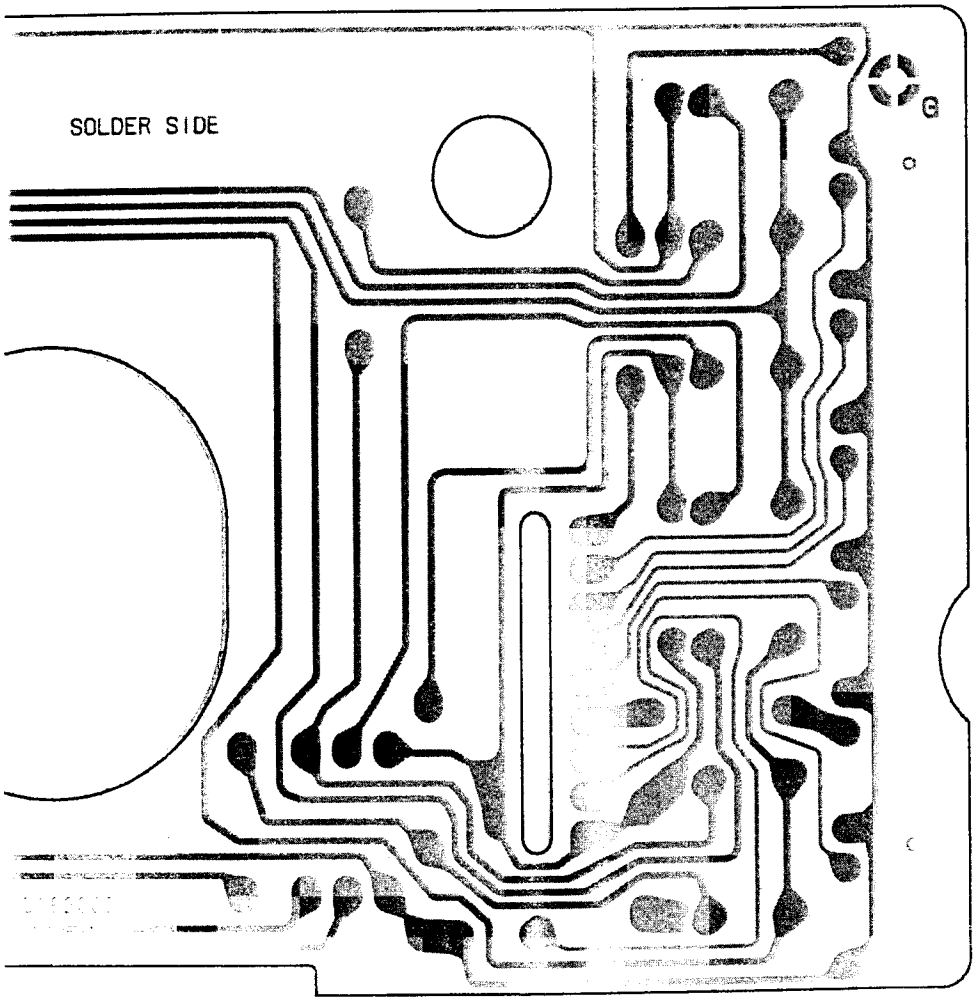

("solder" side)

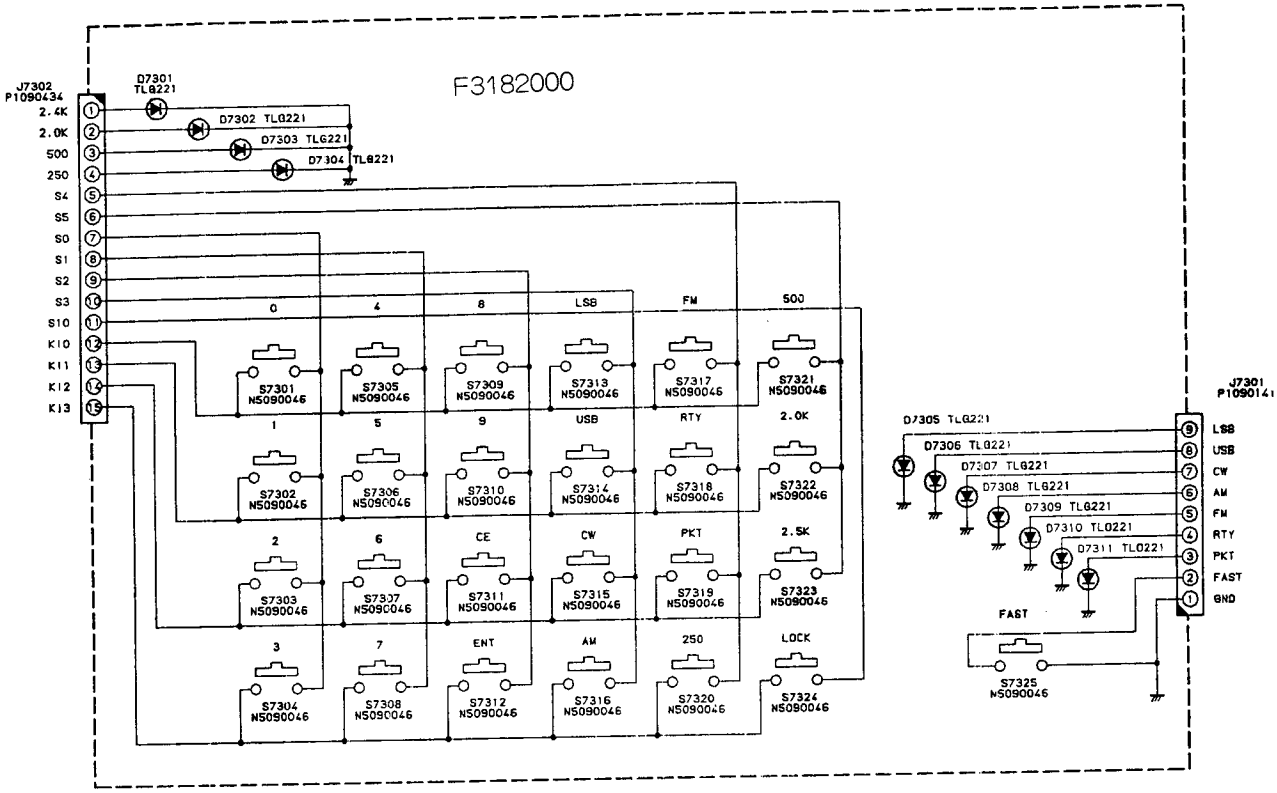
F3182000
J7302
P1090434
2.4K
2.0K
500
250
S4
S5
S0
S1
S2
S3
S10
K10
K11
K12
K13
D7301 TLG221
D7302 TLG221
D7303 TLG221
D7304 TLG221
0
4
8
LSB
FM
500
S7301 NS090046
S7305 NS090046
S7309 NS090046
S7313 NS090046
S7317 NS090046
S7321 NS090046
1
5
9
USB
RTY
2.0K
S7302 NS090046
S7306 NS090046
S7310 NS090046
S7314 NS090046
S7318 NS090046
S7322 NS090046
2
6
CE
CW
PKT
2.5K
S7303 NS090046
S7307 NS090046
S7311 NS090046
S7315 NS090046
S7319 NS090046
S7323 NS090046
3
7
ENT
AM
250
LOCK
S7304 NS090046
S7308 NS090046
S7312 NS090046
S7316 NS090046
S7320 NS090046
S7324 NS090046
D7305 TLG221
D7306 TLG221
D7307 TLG221
D7308 TLG221
D7309 TLG221
D7310 TLG221
D7311 TLG221
FAST
S7325 NS090046
J7301
P1090141
LSB
USB
CW
AM
FM
RTY
PKT
FAST
GND

KEY UNIT

REF.	YAESU P/N	DESCRIPTION	MFGR'S DESIG	VALUE	WV	TOL.	VERS.
		*** KEY UNIT ***					
	CA0256001	P.C.B. W COMP.					
	F3182000	P.C.B. W/O COMP.					
D 7301	G2090458	LED	TLG221				
D 7302	G2090458	LED	TLG221				
D 7303	G2090458	LED	TLG221				
D 7304	G2090458	LED	TLG221				
D 7305	G2090458	LED	TLG221				
D 7306	G2090458	LED	TLG221				
D 7307	G2090458	LED	TLG221				
D 7308	G2090458	LED	TLG221				
D 7309	G2090458	LED	TLG221				
D 7310	G2090461	LED	TLO221				
D 7311	G2090461	LED	TLO221				
J 7301	P1090141	CONNECTOR	5124-09BHPB				
J 7302	P1090434	CONNECTOR	5124-15BHPB				
S 7301	N5090046	TACT SWITCH	EVQ-333 H=5.0				
S 7302	N5090046	TACT SWITCH	EVQ-333 H=5.0				
S 7303	N5090046	TACT SWITCH	EVQ-333 H=5.0				
S 7304	N5090046	TACT SWITCH	EVQ-333 H=5.0				
S 7305	N5090046	TACT SWITCH	EVQ-333 H=5.0				
S 7306	N5090046	TACT SWITCH	EVQ-333 H=5.0				
S 7307	N5090046	TACT SWITCH	EVQ-333 H=5.0				
S 7308	N5090046	TACT SWITCH	EVQ-333 H=5.0				
S 7309	N5090046	TACT SWITCH	EVQ-333 H=5.0				
S 7310	N5090046	TACT SWITCH	EVQ-333 H=5.0				
S 7311	N5090046	TACT SWITCH	EVQ-333 H=5.0				
S 7312	N5090046	TACT SWITCH	EVQ-333 H=5.0				
S 7313	N5090046	TACT SWITCH	EVQ-333 H=5.0				
S 7314	N5090046	TACT SWITCH	EVQ-333 H=5.0				
S 7315	N5090046	TACT SWITCH	EVQ-333 H=5.0				
S 7316	N5090046	TACT SWITCH	EVQ-333 H=5.0				
S 7317	N5090046	TACT SWITCH	EVQ-333 H=5.0				
S 7318	N5090046	TACT SWITCH	EVQ-333 H=5.0				
S 7319	N5090046	TACT SWITCH	EVQ-333 H=5.0				
S 7320	N5090046	TACT SWITCH	EVQ-333 H=5.0				
S 7321	N5090046	TACT SWITCH	EVQ-333 H=5.0				
S 7322	N5090046	TACT SWITCH	EVQ-333 H=5.0				
S 7323	N5090046	TACT SWITCH	EVQ-333 H=5.0				
S 7324	N5090046	TACT SWITCH	EVQ-333 H=5.0				
S 7325	N5090046	TACT SWITCH	EVQ-333 H=5.0				

Notes:

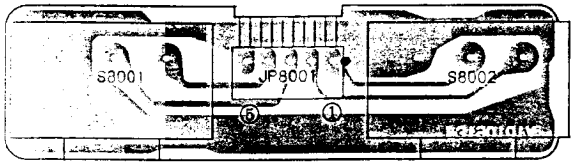

("component" side)

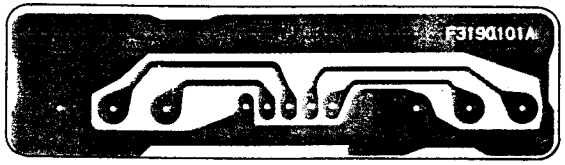

("solder" side)

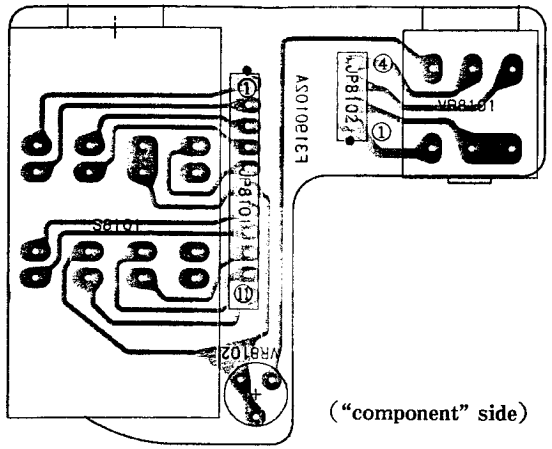

("component" side)

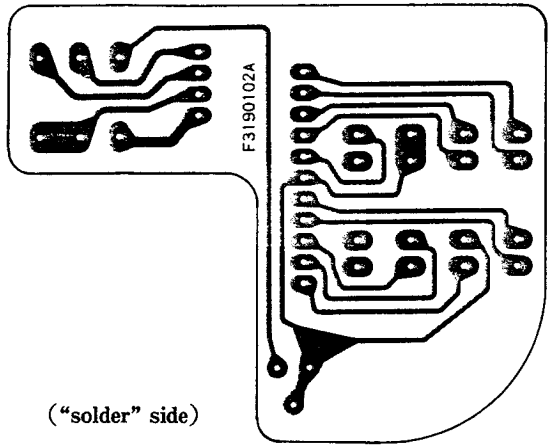

("solder" side)

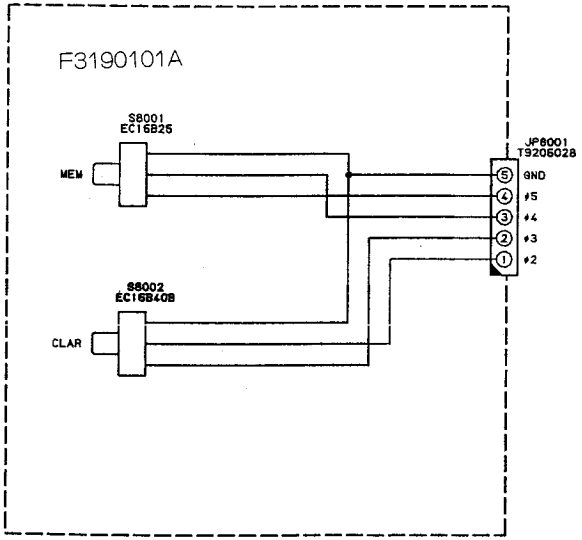

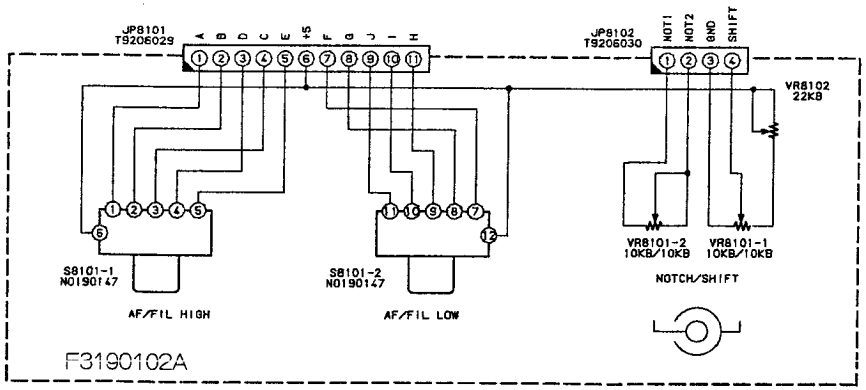

Rotary Encoder (R. Enc) Unit & Switch B (SW-B) Unit

REF.	YAESU P/N	DESCRIPTION	MFGR'S DESIG	VALUE	WV	TOL.	VERS.
		*** R. ENC UNIT ***					
	CA0418001	P.C.B. W COMP.					
	F3190101A	P.C.B. W/O COMP.					
JP8001	T9206028	WIRE-ASSY					
S 8001	Q9000524	ROTARY CODE S.W.	EC16B25D				
S 8002	Q9000525	ROTARY CODE S.W.	EC16B40B				
	R0136890	FITTING					

REF.	YAESU P/N	DESCRIPTION	MFGR'S DESIG	VALUE	WV	TOL.	VERS.
		*** SW B UNIT ***					
	CA0419001	P.C.B. W COMP.					
	F3190102A	P.C.B. W/O COMP.					
JP8101	T9206029	WIRE-ASSY					
JP8102	T9206030	WIRE-ASSY					
S 8101	N0190147	ROTARY SWITCH	SRRS2R				
VR8101	J62800105	POT.	RK12	10KB/10KB			
VR8102	J51745223	POT.	H0651A015-22KB	22KB			
	R0136900A	FITTING					

Notes:

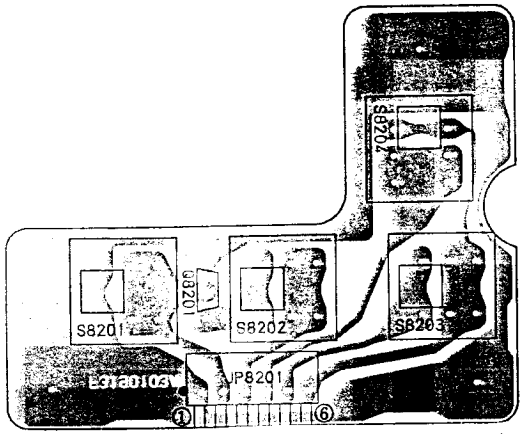

("component" side)

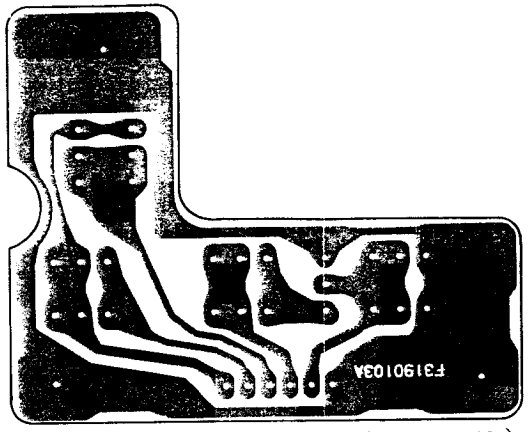

("solder" side)

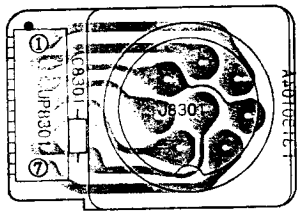

("component" side)

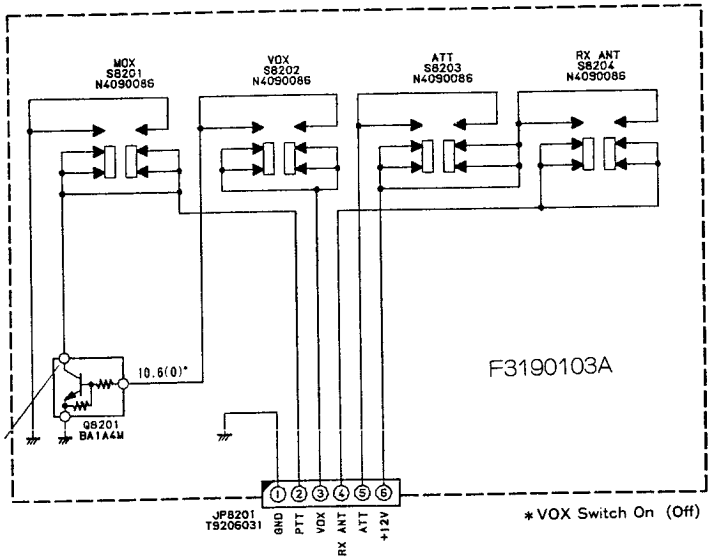

MOX-SW	VOX-SW ON	VOX-SW OFF
ON	0.0	0.0
OFF	0.0	4.6

Short the KEY jack.

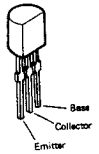

BA1A4M
(Q8201)

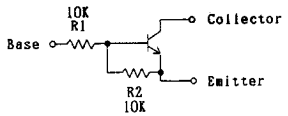

BA1A4M CIRCUIT DIAGRAM

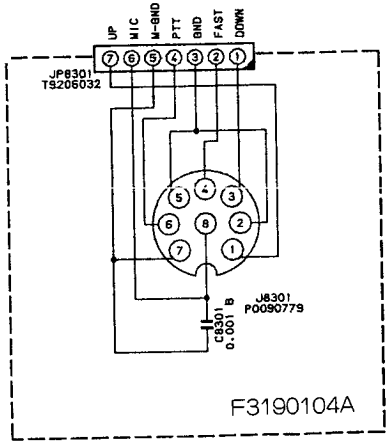

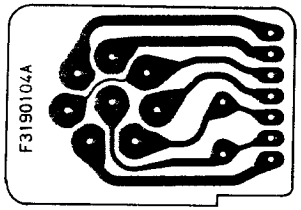

("solder" side)

NOTE:
CAPACITOR VALUES ARE IN μF. 50V ±
UNLESS OTHERWISE NOTED.

REF.	YAESU P/N	DESCRIPTION	MFGR'S DESIG	VALUE	WV	TOL.	VERS.
		*** PUSH SW UNIT ***					
	CA0421001	P.C.B. W COMP.					
	F3190103A	P.C.B. W/O COMP.					
JP8201	T9206031	WIRE-ASSY					
Q 8201	G3090074	TRANSISTOR	BA1A4M				
S 8201	N4090086	PUSH SWITCH	SPH121A94				
S 8202	N4090086	PUSH SWITCH	SPH121A94				
S 8203	N4090086	PUSH SWITCH	SPH121A94				
S 8204	N4090086	PUSH SWITCH	SPH121A94				

REF.	YAESU P/N	DESCRIPTION	MFGR'S DESIG	VALUE	WV	TOL.	VERS.
		*** MIC UNIT ***					
	CA0422001	P.C.B. W COMP.					
	F3190104A	P.C.B. W/O COMP.					
C 8301	K28179001	CERAMIC CAP.	UP050B102K-A-B	0.001uF	50V	B	
J 8301	P0090779	CONNECTOR	FM214-8SS(A)NI				
JP8301	T9206032	WIRE-ASSY					

Notes:

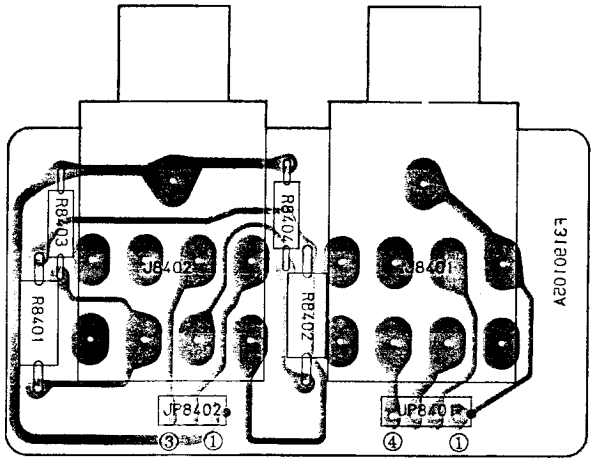

("component" side)

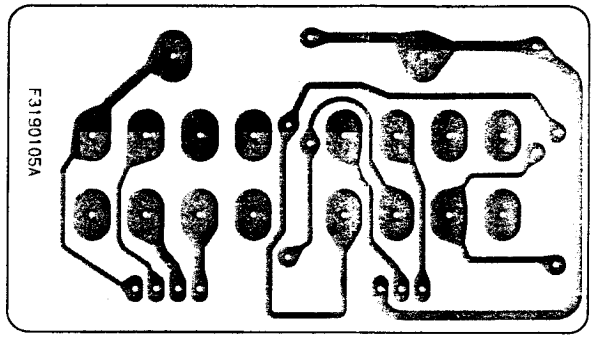

("solder" side)

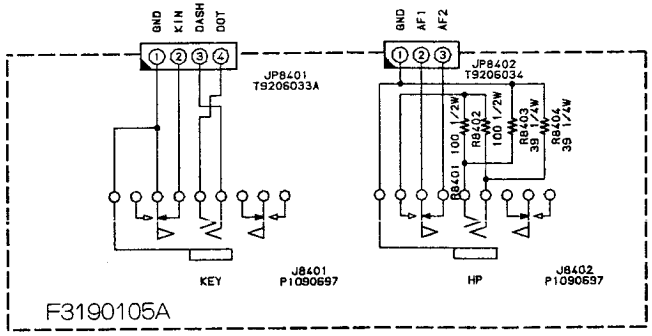

REF.	YAESU P/N	DESCRIPTION	MFGR'S DESIG	VALUE	WV	TOL.	VERS.
		*** HP UNIT ***					
	CA0423001	P.C.B. W COMP.					
	F3190105A	P.C.B. W/O COMP.					
J 8401	P1090697	CONNECTOR	S-G4617#02				
J 8402	P1090697	CONNECTOR	S-G4617#02				
JP8401	T9206033A	WIRE-ASSY					
JP8402	T9206034	WIRE-ASSY					
R 8401	J01275101	CARBON FILM RES.	RD12TJ101	100	1/2W		
R 8402	J01275101	CARBON FILM RES.	RD12TJ101	100	1/2W		
R 8403	J01245390	CARBON FILM RES.	RD14TJ390	39	1/4W		
R 8404	J01245390	CARBON FILM RES.	RD14TJ390	39	1/4W		

Notes:

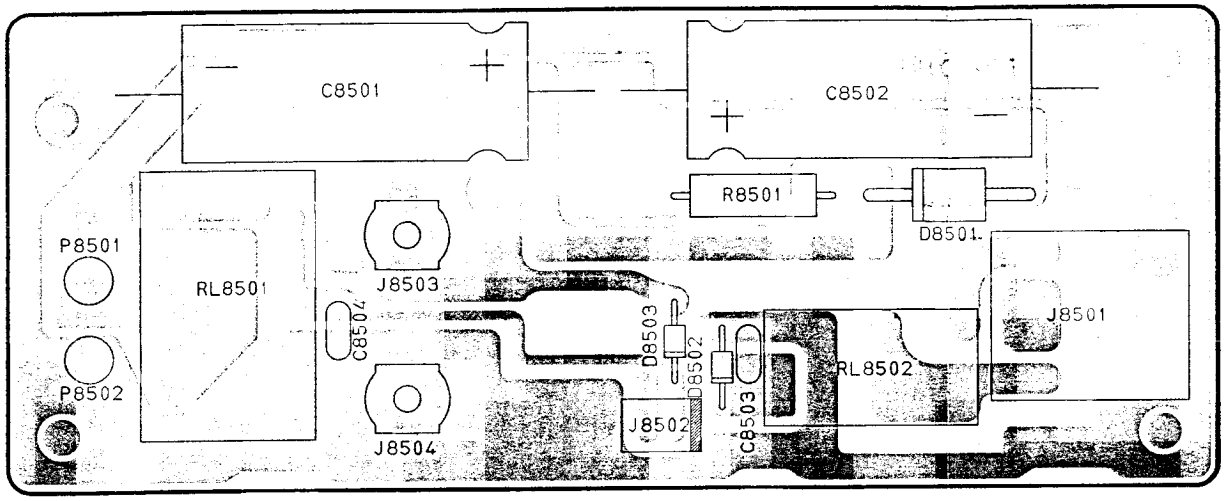

("component" side)

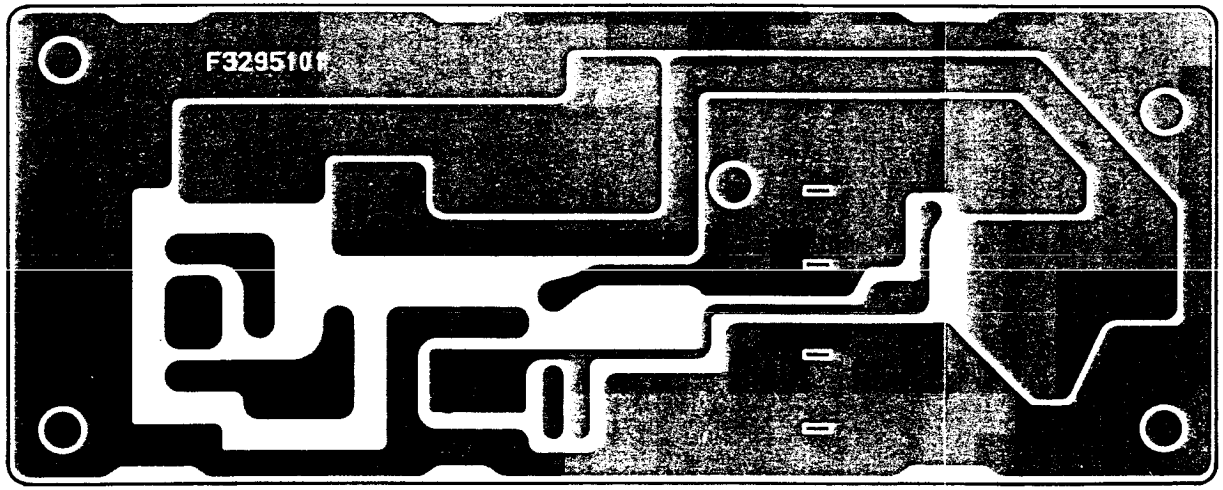

("solder" side)

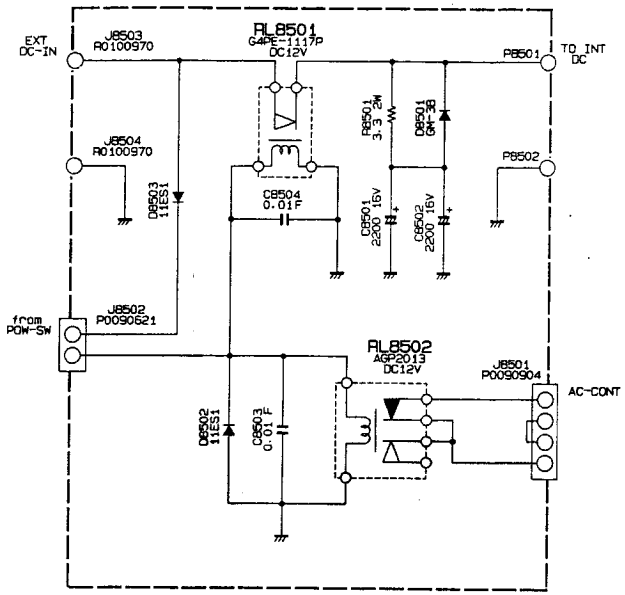

REF.	YAESU P/N	DESCRIPTION	MFGR'S DESIG	VALUE	WV	TOL.	VERS.
		*** DC SW UNIT ***					
	CA0904001	P.C.B. W COMP.					
	F3295101	P.C.B. W/O COMP.					
C 8501	K41129003	AL. ELECTRO. CAP.	ECE-B1CU222	2200uF	16V		
C 8502	K41129003	AL. ELECTRO. CAP.	ECE-B1CU222	2200uF	16V		
C 8503	K13179008	CERAMIC CAP.	DD106F103Z50	0.01uF	50V	F	
C 8504	K13179008	CERAMIC CAP.	DD106F103Z50	0.01uF	50V	F	
D 8501	G2090464	DIODE	GM-3B				
D 8502	G2090499	DIODE	11ES1				
D 8503	G2090499	DIODE	11ES1				
J 8501	P0090904	CONNECTOR	B4PS-VH				
J 8502	P0090621	CONNECTOR	SC25-02WS				
J 8503	R0100970	TERMINAL					
J 8504	R0100970	TERMINAL					
P 8501	T9317892	WIRE-ASSY					
P 8502	T9317893	WIRE-ASSY					
R 8501	J22339003	METAL FILM RES.	ERX-2SJ3R3P	3.3	2W		
RL8501	M1190095	RELAY	G4PE-1117P		DC12V		
RL8502	M1190069	RELAY	AGP2013		DC12V		

Notes:

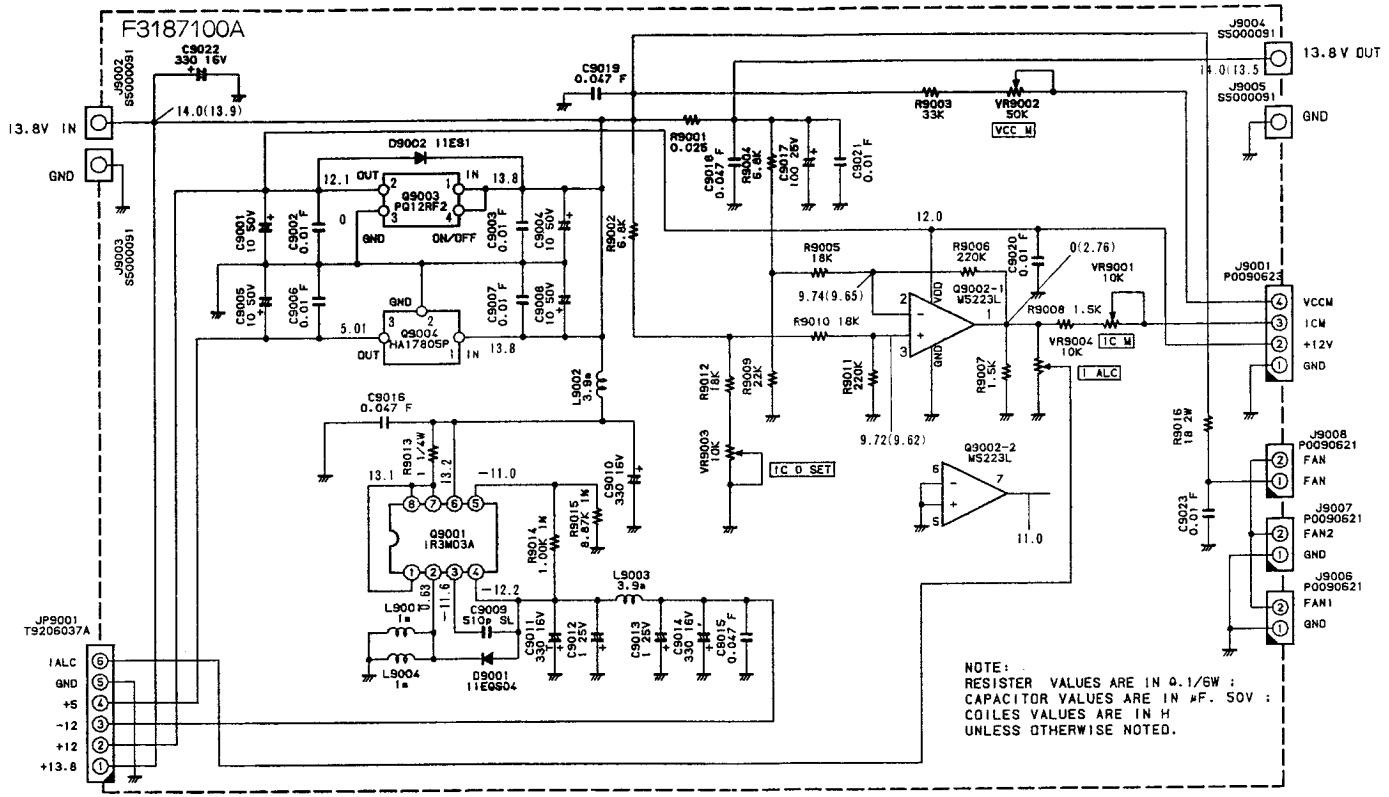

Receive (Transmit) DC Voltage
Measuring Conditions
Frequency: 14.200MHz
Mode: CW
RF Output: 100W

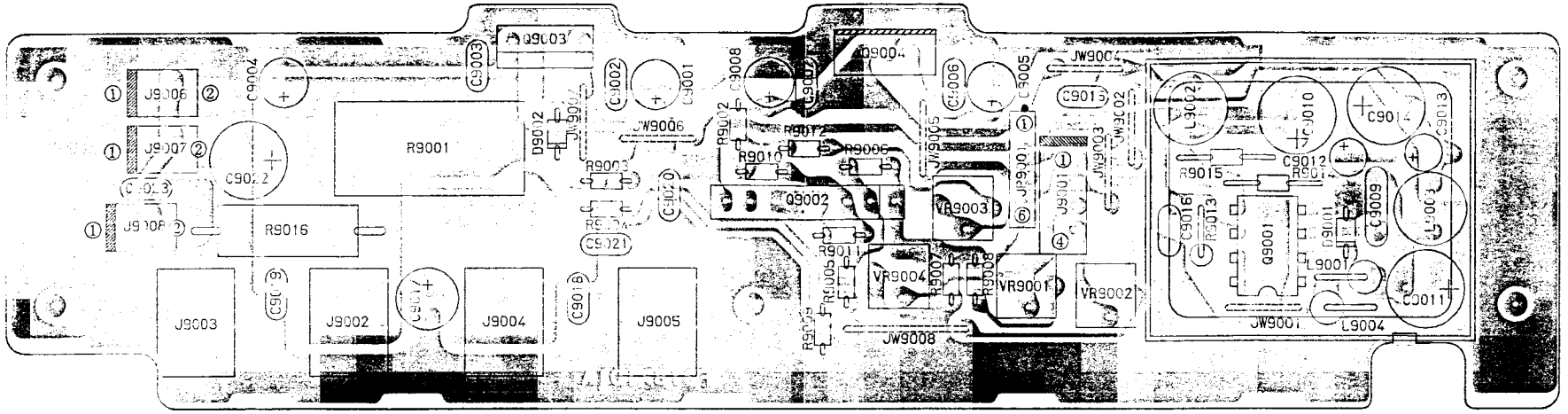

("component" side)

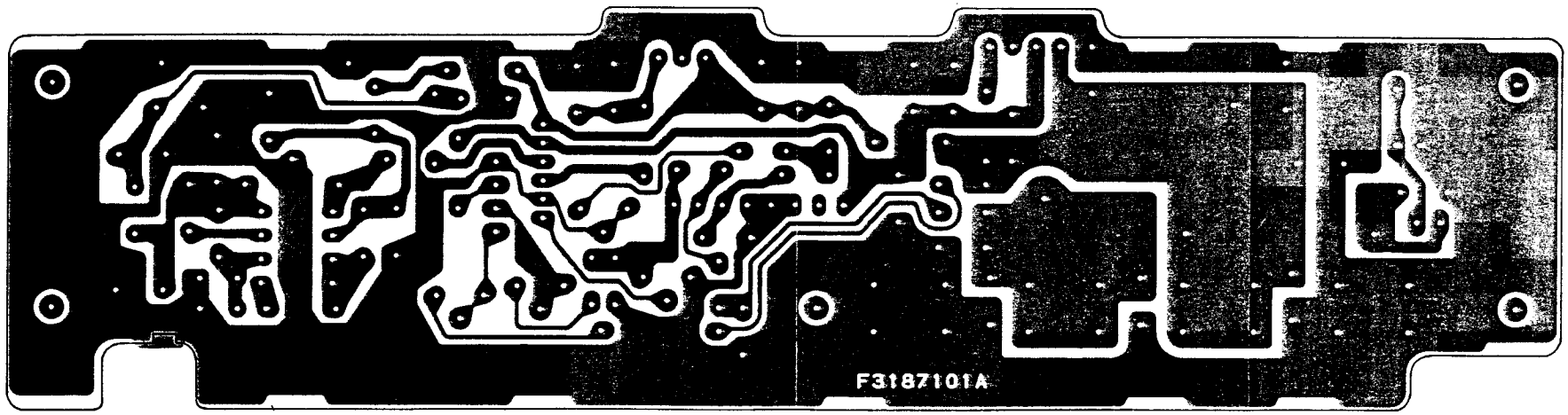

("solder" side)

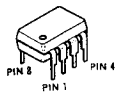

IR3M03A
(Q9001)

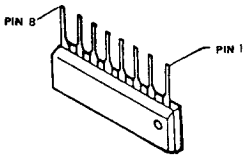

M5223L
(Q9002)

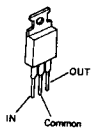

HA17805P
(Q9004)

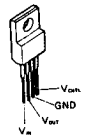

PQ12RF2
(Q9003)

REF.	YAESU P/N	DESCRIPTION	MFGR'S DESIG	VALUE	WV	TOL.	VERS.
		*** REG UNIT ***					
	CA0278001	P.C.B. W COMP.					
	F3187100A	P.C.B. W/O COMP.					
C 9001	K46170021	AL. ELECTRO. CAP.	50V100M5X11TR5	10uF	50V		
C 9002	K26170657	CERAMIC CAP.	DD106-979F103Z50	0.01uF	50V	F	
C 9003	K26170657	CERAMIC CAP.	DD106-979F103Z50	0.01uF	50V	F	
C 9004	K46170021	AL. ELECTRO. CAP.	50V100M5X11TR5	10uF	50V		
C 9005	K46170021	AL. ELECTRO. CAP.	50V100M5X11TR5	10uF	50V		
C 9006	K26170657	CERAMIC CAP.	DD106-979F103Z50	0.01uF	50V	F	
C 9007	K26170657	CERAMIC CAP.	DD106-979F103Z50	0.01uF	50V	F	
C 9008	K46170021	AL. ELECTRO. CAP.	50V100M5X11TR5	10uF	50V		
C 9009	K26171046	CERAMIC CAP.	DD109-979SL511J50	510p	50V	SL	
C 9010	K46120002	AL. ELECTRO. CAP.	16V331M8X11TR5	330uF	16V		
C 9011	K46120002	AL. ELECTRO. CAP.	16V331M8X11TR5	330uF	16V		
C 9012	K76140013	TANTALUM CAP.	TPDN1E010M8S(MX0)	1uF	25V		
C 9013	K76140013	TANTALUM CAP.	TPDN1E010M8S(MX0)	1uF	25V		
C 9014	K46120002	AL. ELECTRO. CAP.	16V331M8X11TR5	330uF	16V		
C 9015	K26170726	CERAMIC CAP.	DD306-979F473Z50	0.047uF	50V	F	
C 9016	K26170726	CERAMIC CAP.	DD306-979F473Z50	0.047uF	50V	F	
C 9017	K46140005	AL. ELECTRO. CAP.	25V101M6X11TR5	100uF	25V		
C 9018	K26170726	CERAMIC CAP.	DD306-979F473Z50	0.047uF	50V	F	
C 9019	K26170726	CERAMIC CAP.	DD306-979F473Z50	0.047uF	50V	F	
C 9020	K26170657	CERAMIC CAP.	DD106-979F103Z50	0.01uF	50V	F	
C 9021	K26170657	CERAMIC CAP.	DD106-979F103Z50	0.01uF	50V	F	
C 9022	K46120002	AL. ELECTRO. CAP.	16V331M8X11TR5	330uF	16V		
C 9023	K26170657	CERAMIC CAP.	DD106-979F103Z50	0.01uF	50V	F	
D 9001	G2060008	DIODE	11EQS04-TA1B2				
D 9002	G2060009	DIODE	11ES1-TA1B2				
J 9001	P0090623	CONNECTOR	SC25-04WS				
J 9002	S5000091	P-96	P-96				
J 9003	S5000091	P-96	P-96				
J 9004	S5000091	P-96	P-96				
J 9005	S5000091	P-96	P-96				
J 9006	P0090621	CONNECTOR	SC25-02WS				
J 9007	P0090621	CONNECTOR	SC25-02WS				
J 9008	P0090621	CONNECTOR	SC25-02WS				
JP9001	T9206037A	WIRE-ASSY					
L 9001	L1190090	M.RFC	LAL04NA102K	1mH			
L 9002	L1190383	M.RFC	RCR-875D-392K	3.9m			
L 9003	L1190383	M.RFC	RCR-875D-392K	3.9m			
L 9004	L1190090	M.RFC	LAL04NA102K	1mH			
Q 9001	G1090837	IC	IR3M03A				
Q 9002	G1090988	IC	M5223L				
Q 9003	G1091138	IC	PQ12RF2				
Q 9004	G1090936	IC	HA17805P				
R 9001	J32009004	SHUNT RES.	R025 J	0.025			

Regulator (REG) Unit

REF.	YAESU P/N	DESCRIPTION	MFGR'S DESIG	VALUE	WV	TOL.	VERS.
R 9002	J07225682	CARBON FILM RES.	RD16TPJ682	6.8K	1/6W		
R 9003	J07225333	CARBON FILM RES.	RD16TPJ333	33K	1/6W		
R 9004	J07225682	CARBON FILM RES.	RD16TPJ682	6.8K	1/6W		
R 9005	J07225183	CARBON FILM RES.	RD16TPJ183	18K	1/6W		
R 9006	J07225224	CARBON FILM RES.	RD16TPJ224	220K	1/6W		
R 9007	J07225152	CARBON FILM RES.	RD16TPJ152	1.5K	1/6W		
R 9008	J07225152	CARBON FILM RES.	RD16TPJ152	1.5K	1/6W		
R 9009	J07225223	CARBON FILM RES.	RD16TPJ223	22K	1/6W		
R 9010	J07225183	CARBON FILM RES.	RD16TPJ183	18K	1/6W		
R 9011	J07225224	CARBON FILM RES.	RD16TPJ224	220K	1/6W		
R 9012	J07225183	CARBON FILM RES.	RD16TPJ183	18K	1/6W		
R 9013	J06245010	CARBON FILM RES.	RD25UJ010T	1	1/4W		
R 9014	J20249101	METAL FILM RES.	MRS25F 1.00K	1.00K	1/4W	1%	
R 9015	J20249046	METAL FILM RES.	MRS25F 8.87K	8.87K	1/4W	1%	
R 9016	J20336180	METAL FILM RES.	RS2B 2W K 18	18	2W		
VR9001	J50784103	POT.	EVN-DCAA03B14	10K			
VR9002	J50784503	POT.	EVN-DCAA03B54	50K			
VR9003	J50784103	POT.	EVN-DCAA03B14	10K			
VR9004	J50784103	POT.	EVN-DCAA03B14	10K			
	R0131630	SHIELD CASE					
	R0131640	SHIELD COVER					
	R0137410B	HEATSINK PLATE					
	R0123510	FITTING					
	R0134490	FITTING					

F3175000A

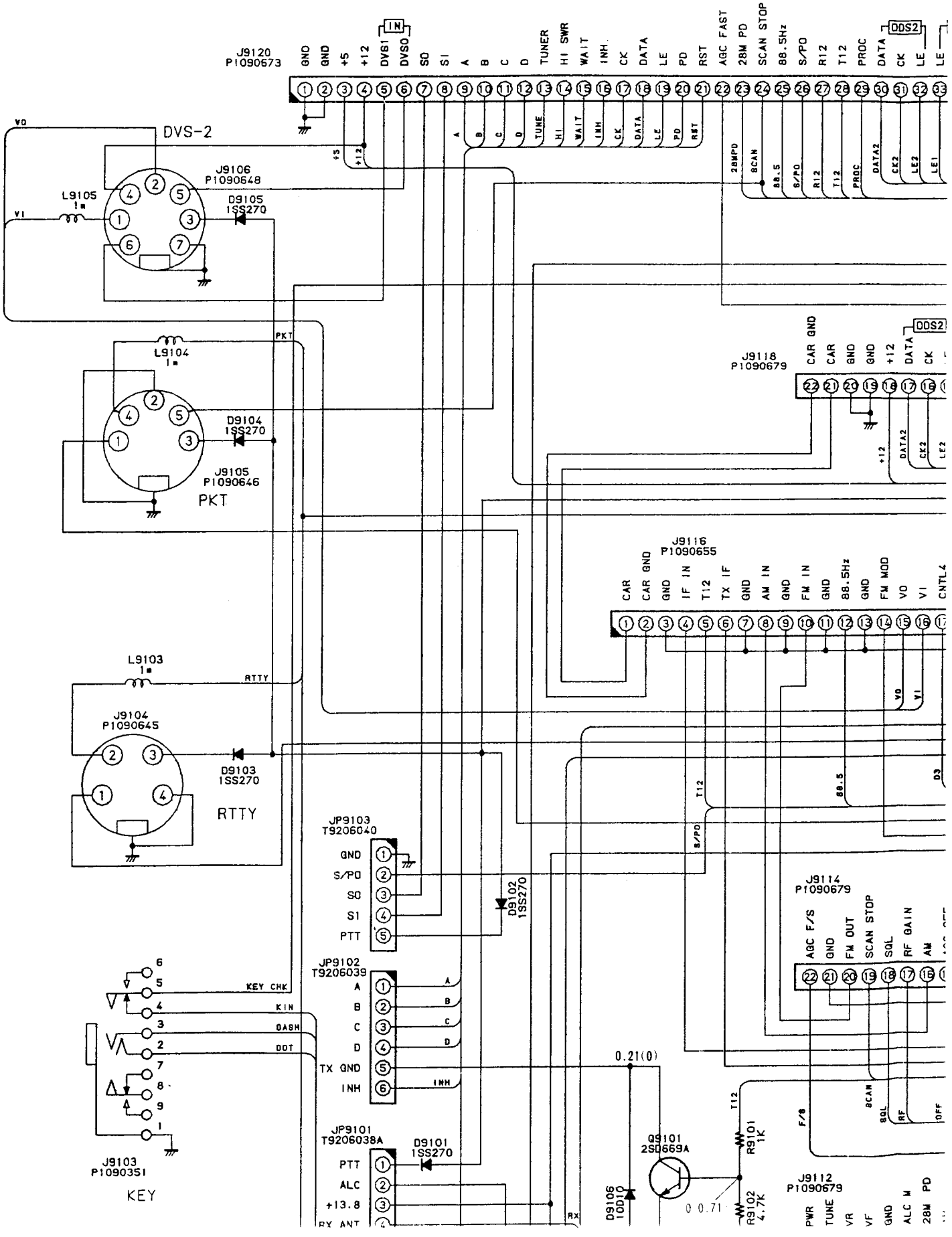
J9120
P1090673
GND
GND
+5
+12
DVS1
DVS0
SO
SI
A
B
C
D
TUNER
HI SWR
WAIT
INH
CK
DATA
LE
PD
RST
AGC FAST
28M PD
SCAN STOP
88.5Hz
S/PO
R12
T12
PROC
DATA
CK
LE
DDS2
IN
DVS-2
VO
VI
J9106
P1090648
L9105
1m
D9105
1SS270
L9104
1m
D9104
1SS270
J9105
P1090646
PKT
PKT
L9103
1m
RTTY
J9104
P1090645
D9103
1SS270
RTTY
J9118
P1090679
CAR GND
CAR
GND
GND
+12
DATA
CK
DATA2
CK2
LE2
J9116
P1090655
CAR GND
GND
IF IN
T12
TX IF
GND
AM IN
GND
FM IN
GND
88.5Hz
GND
FM MOD
VO
VI
CNTL4
JP9103
T9206040
GND
S/PO
SO
SI
PTT
D9102
1SS270
JP9102
T9206039
A
B
C
D
TX GND
INH
JP9101
T9206038A
PTT
ALC
+13.8
RX ANT
D9101
1SS270
J9103
P1090351
KEY
KEY CHK
KIN
DASH
DOT
J9114
P1090679
AGC F/S
GND
FM OUT
SCAN STOP
SQL
RF GAIN
AM
0.21(0)
Q9101
2SD669A
R9101
1K
R9102
4.7K
D9106
10D10
0 0.71
J9112
P1090679
PWR
TUNE
VR
VF
GND
ALC M
28M PD
RX

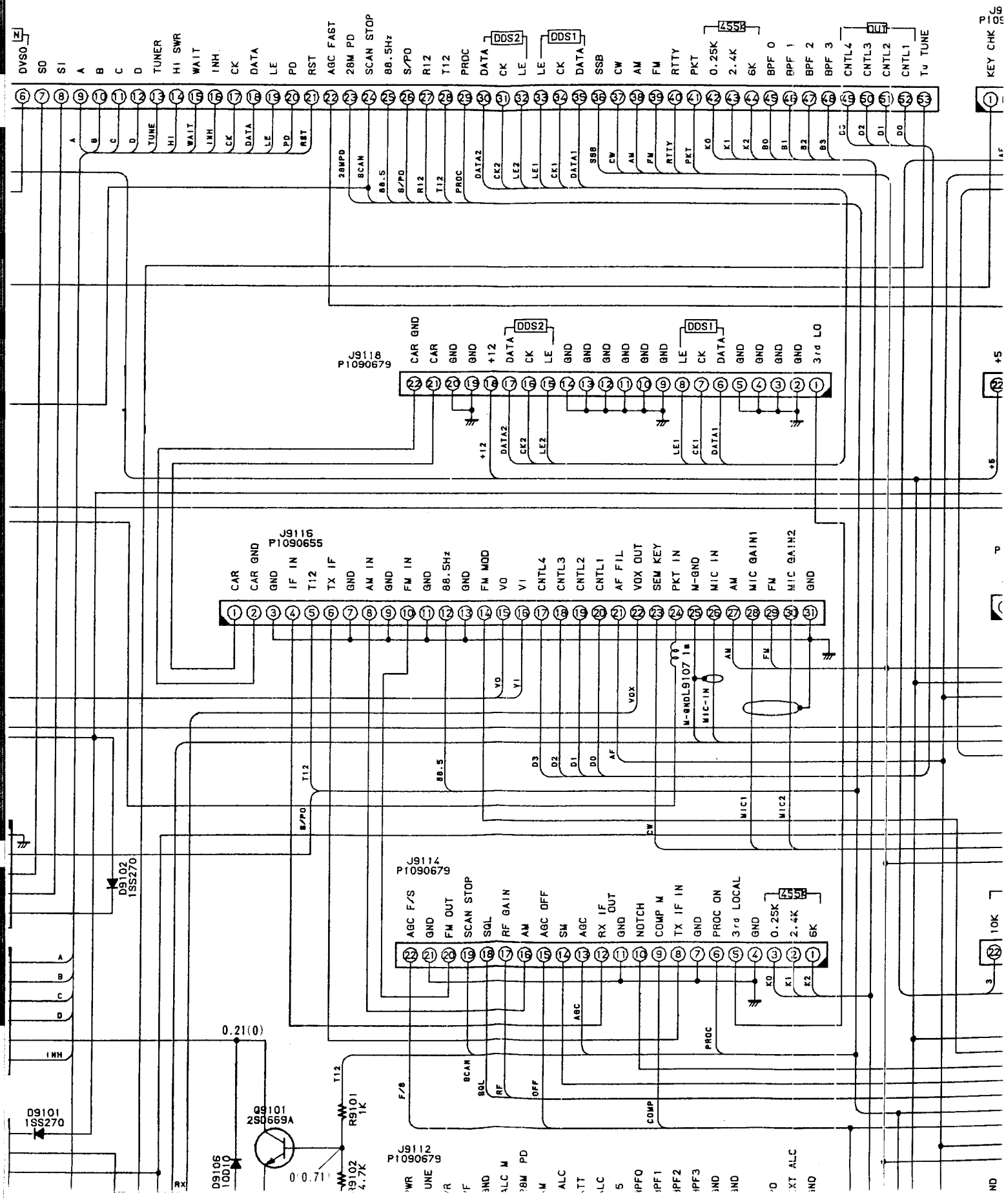

DVSO
SO
SI
A
B
C
D
TUNER
HI SWR
WAIT
INH
CK
DATA
LE
PD
RST
AGC FAST
28M PD
SCAN STOP
88.5Hz
S/PO
R12
T12
PROC
DATA
CK
LE
LE
CK
DATA
SSB
CW
AM
FM
RTTY
PKT
0.25K
2.4K
6K
BPF 0
BPF 1
BPF 2
BPF 3
CNTL4
CNTL3
CNTL2
CNTL1
Tu TUNE
KEY CHK
DDS2
DDS1
455K
OUT
J9118
P1090679
CAR GND
CAR
GND
GND
+12
DATA
CK
LE
GND
GND
GND
GND
GND
GND
LE
CK
DATA
GND
GND
GND
GND
3rd LO
J9116
P1090655
CAR
CAR GND
GND
IF IN
T12
TX IF
GND
AM IN
GND
FM IN
GND
88.5Hz
GND
FM MOD
VO
VI
CNTL4
CNTL3
CNTL2
CNTL1
AF FIL
VOX OUT
SEM KEY
PKT IN
M-GND
MIC IN
AM
MIC GAIN1
FM
MIC GAIN2
GND
M-GND
L9107 1m
MIC-IN
J9114
P1090679
AGC F/S
GND
FM OUT
SCAN STOP
SQL
RF GAIN
AM
AGC OFF
SM
AGC
RX IF OUT
GND
NOTCH
COMP M
TX IF IN
GND
PROC ON
3rd LOCAL
GND
0.25K
2.4K
6K
D9102
1SS270
D9101
1SS270
D9106
1OD10
Q9101
2SD669A
R9101
1K
R9102
4.7K
0.21(0)
0(0.71)
J9112
P1090679

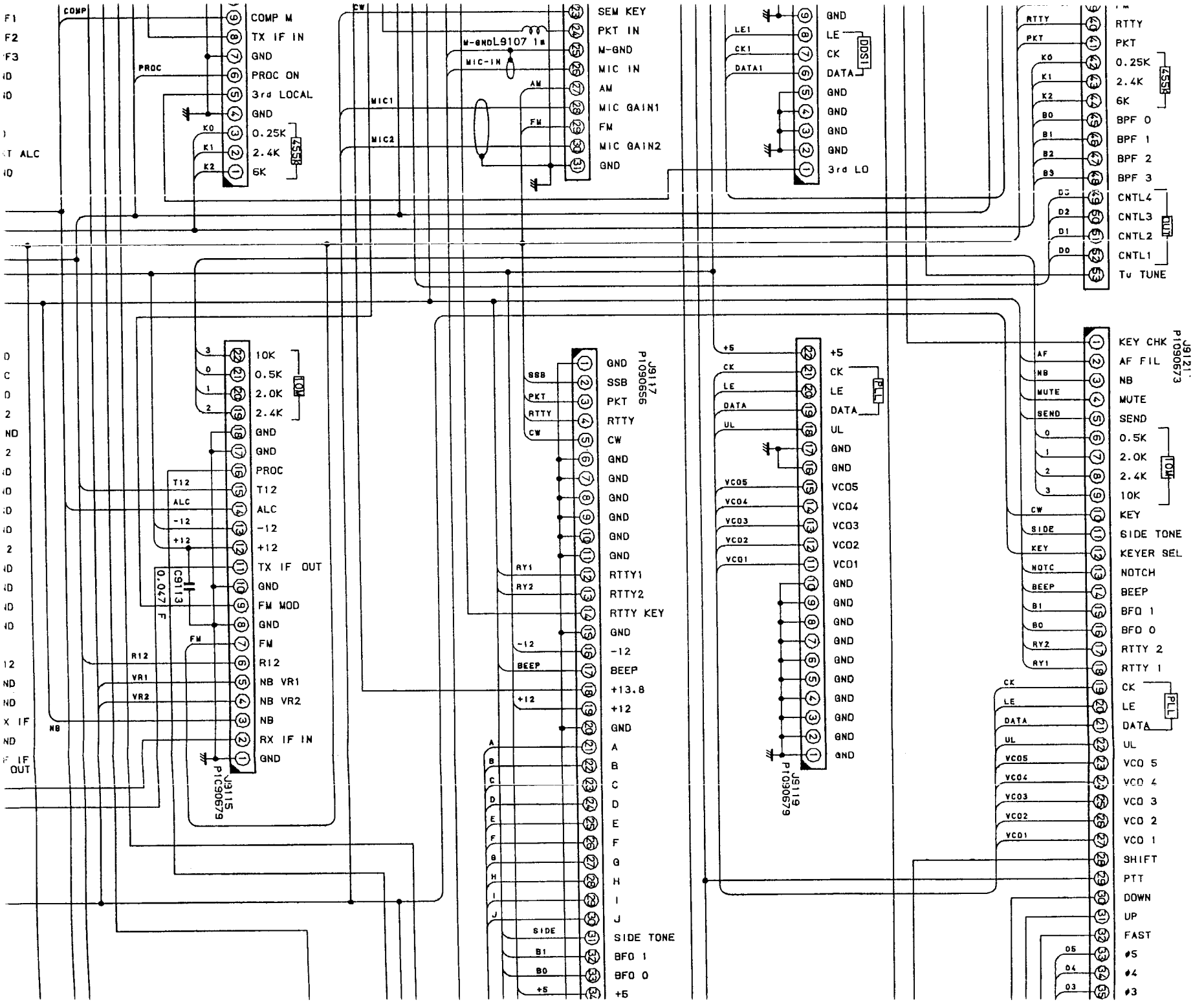
COMP M
TX IF IN
GND
PROC ON
3rd LOCAL
GND
0.25K
2.4K
6K
455B
SEM KEY
PKT IN
M-GND
MIC IN
AM
MIC GAIN1
FM
MIC GAIN2
GND
L9107 1m
GND
LE
CK
DATA
GND
GND
GND
GND
3rd LO
DDS1
RTTY
PKT
0.25K
2.4K
6K
BPF 0
BPF 1
BPF 2
BPF 3
CNTL4
CNTL3
CNTL2
CNTL1
Tu TUNE
OUT
10K
0.5K
2.0K
2.4K
GND
GND
PROC
T12
ALC
-12
+12
TX IF OUT
GND
FM MOD
GND
FM
R12
NB VR1
NB VR2
NB
RX IF IN
GND
C9113
0.047 F
J9115
P1C90679
J9117
P1090656
GND
SSB
PKT
RTTY
CW
GND
GND
GND
GND
GND
GND
RTTY1
RTTY2
RTTY KEY
GND
-12
BEEP
+13.8
+12
GND
A
B
C
D
E
F
G
H
I
J
SIDE TONE
BFO 1
BFO 0
+5
+5
CK
LE
DATA
UL
GND
GND
VCO5
VCO4
VCO3
VCO2
VCO1
GND
GND
GND
GND
GND
GND
GND
GND
GND
GND
GND
J9119
P1C90679
PLL
J9121
P1090673
KEY CHK
AF FIL
NB
MUTE
SEND
0.5K
2.0K
2.4K
10K
KEY
SIDE TONE
KEYER SEL
NOTCH
BEEP
BFO 1
BFO 0
RTTY 2
RTTY 1
CK
LE
DATA
UL
VCO 5
VCO 4
VCO 3
VCO 2
VCO 1
SHIFT
PTT
DOWN
UP
FAST
ø5
ø4
ø3
10M
PLL

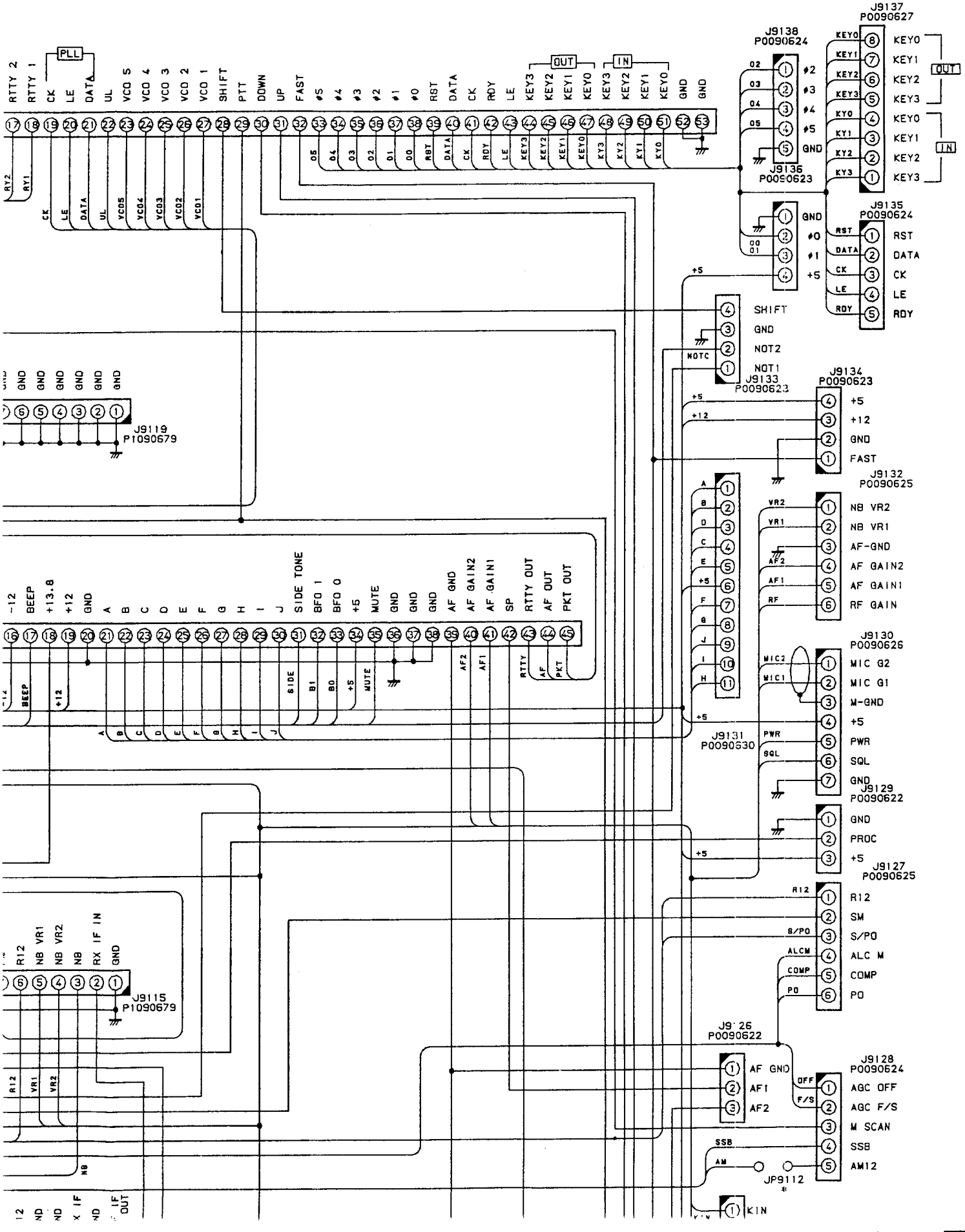
J9137
P0090627
J9138
P0090624
J9136
P0090623
J9135
P0090624
J9134
P0090623
J9133
P0090623
J9119
P1090679
J9132
P0090625
J9130
P0090626
J9131
P0090530
J9129
P0090622
J9127
P0090625
J9115
P1090679
J9126
P0090622
J9128
P0090624
JP9112
PLL
OUT
IN
SHIFT
GND
NOT2
NOT1
+5
+12
FAST
NB VR2
NB VR1
AF-GND
AF GAIN2
AF GAIN1
RF GAIN
MIC G2
MIC G1
M-GND
PWR
SQL
PROC
R12
SM
S/PO
ALC M
COMP
PO
AF GND
AF1
AF2
AGC OFF
AGC F/S
M SCAN
SSB
AM12
KIN

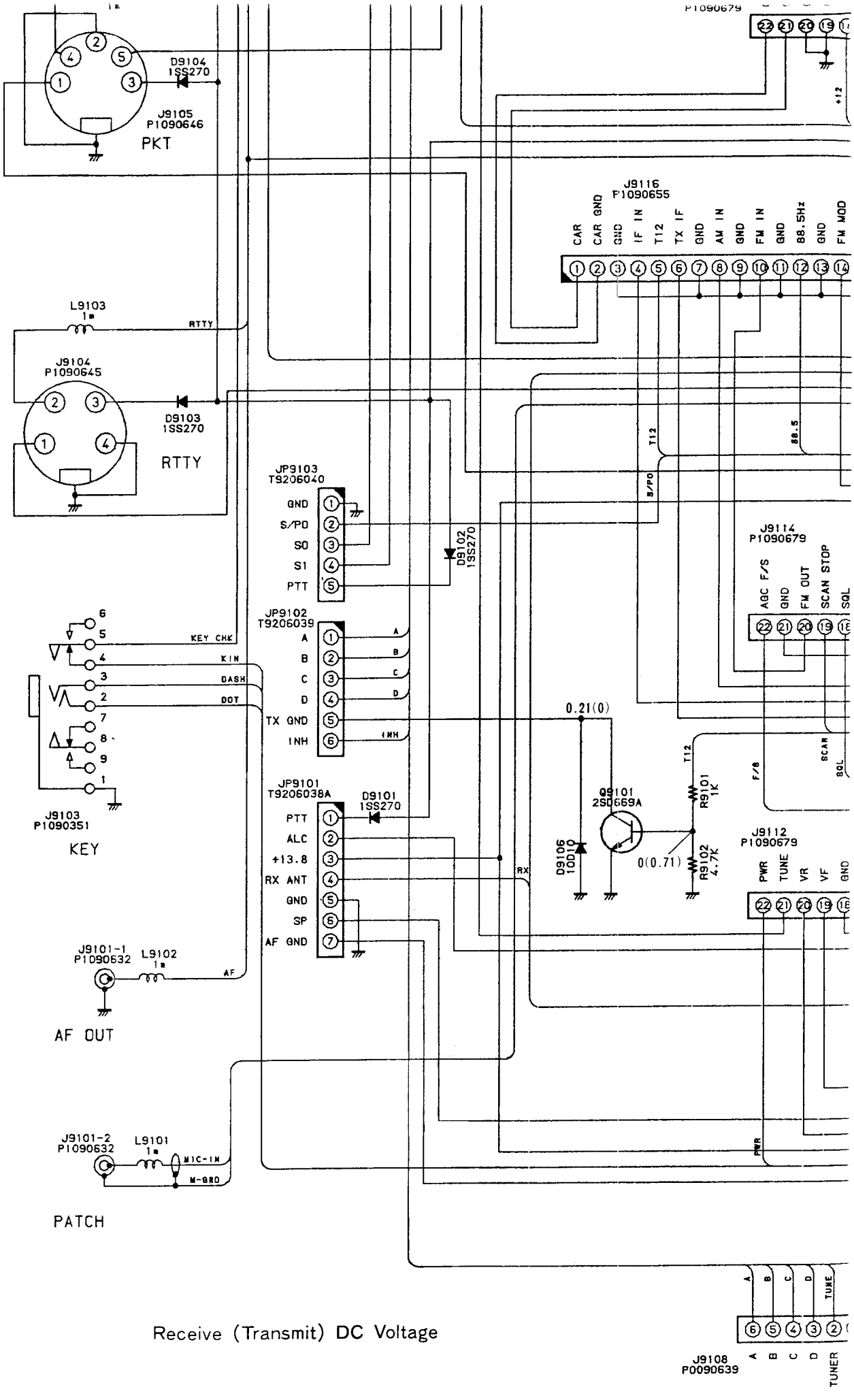
D9104
1SS270
J9105
P1090646
PKT
L9103
RTTY
J9104
P1090645
D9103
1SS270
RTTY
J9116
P1090655
CAR
CAR GND
GND
IF IN
T12
TX IF
GND
AM IN
GND
FM IN
GND
88.5Hz
GND
FM MOD
JP9103
T9206040
GND
S/PO
S0
S1
PTT
D9102
1SS270
JP9102
T9206039
A
B
C
D
TX GND
INH
JP9101
T9206038A
PTT
ALC
+13.8
RX ANT
GND
SP
AF GND
D9101
1SS270
J9114
P1090679
AGC F/S
GND
FM OUT
SCAN STOP
SQL
KEY CHK
KIN
DASH
DOT
J9103
P1090351
KEY
0.21(0)
Q9101
2SD669A
R9101
1K
R9102
4.7K
D9106
1001D
0(0.71)
J9112
P1090679
PWR
TUNE
VR
VF
GND
J9101-1
P1090632
L9102
AF
AF OUT
J9101-2
P1090632
L9101
MIC-IN
M-GND
PATCH
J9108
P0090639
TUNER
Receive (Transmit) DC Voltage

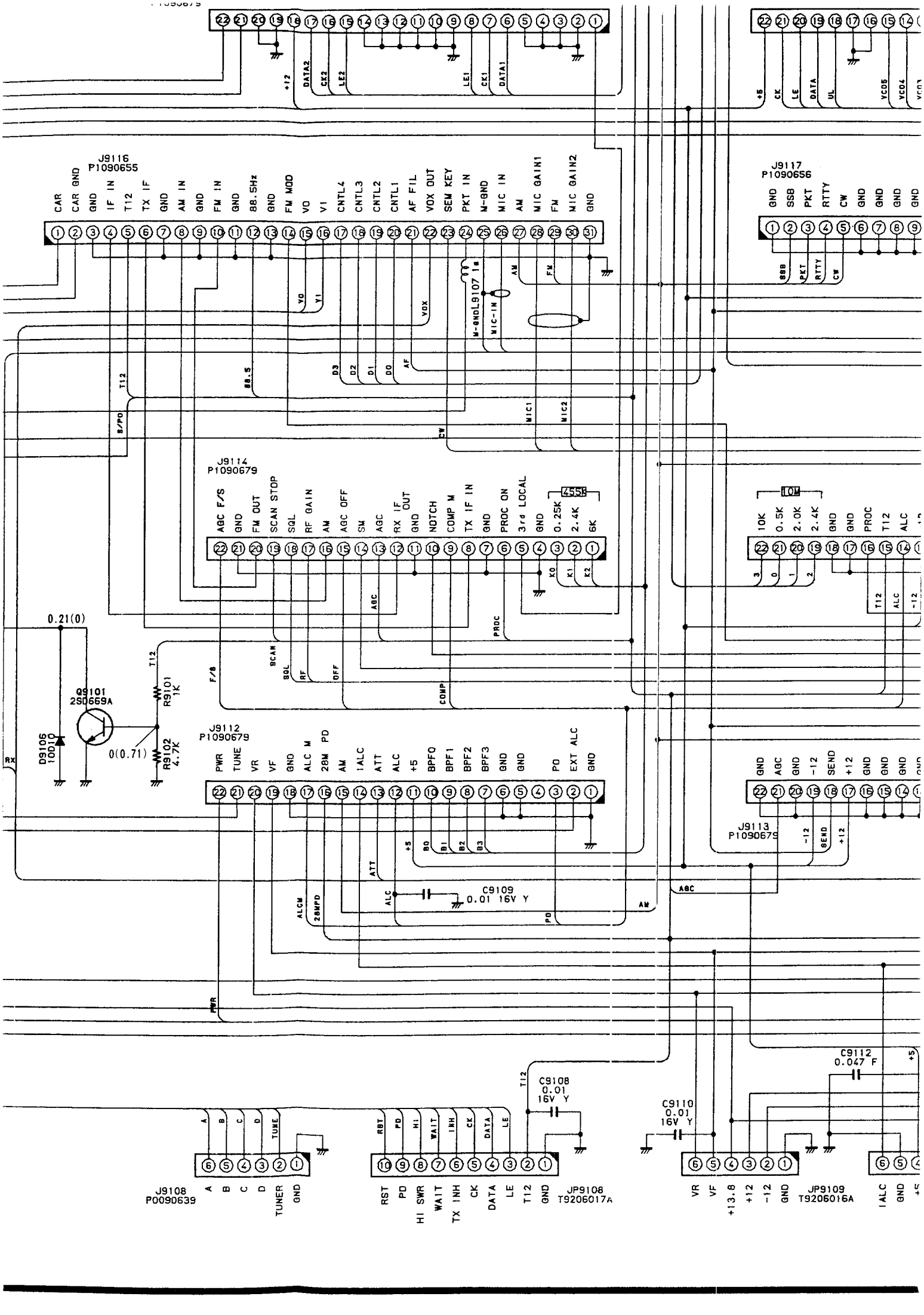

J9116
P1090655
CAR
CAR GND
GND
IF IN
T12
TX IF
GND
AM IN
GND
FM IN
GND
88.5Hz
GND
FM MOD
VO
V1
CNTL4
CNTL3
CNTL2
CNTL1
AF FIL
VOX OUT
SEM KEY
PKT IN
M-GND
MIC IN
AM
MIC GAIN1
FM
MIC GAIN2
GND
J9117
P1090656
GND
SSB
PKT
RTTY
CW
GND
GND
GND
GND
L9107 1m
M-GND
MIC-IN
J9114
P1090679
AGC F/S
GND
FM OUT
SCAN STOP
SQL
RF GAIN
AM
AGC OFF
SM
AGC
RX IF OUT
GND
NOTCH
COMP M
TX IF IN
GND
PROC ON
3rd LOCAL
GND
0.25K
2.4K
6K
455K
10K
0.5K
2.0K
2.4K
GND
GND
PROC
T12
ALC
0.21(0)
Q9101
2SD669A
R9101
1K
R9102
4.7K
D9106
10D10
0(0.71)
J9112
P1090679
PWR
TUNE
VR
VF
GND
ALC M
28M PD
AM
IALC
ATT
ALC
+5
BPF0
BPF1
BPF2
BPF3
GND
GND
PO
EXT ALC
GND
J9113
P1090679
GND
AGC
GND
-12
SEND
+12
GND
GND
GND
C9109
0.01 16V Y
C9108
0.01
16V Y
C9110
0.01
16V Y
C9112
0.047 F
J9108
P0090639
A
B
C
D
TUNER
GND
RST
PD
HI SWR
WAIT
TX INH
CK
DATA
LE
T12
GND
JP9108
T9206017A
VR
VF
+13.8
+12
-12
GND
JP9109
T9206016A
IALC
GND

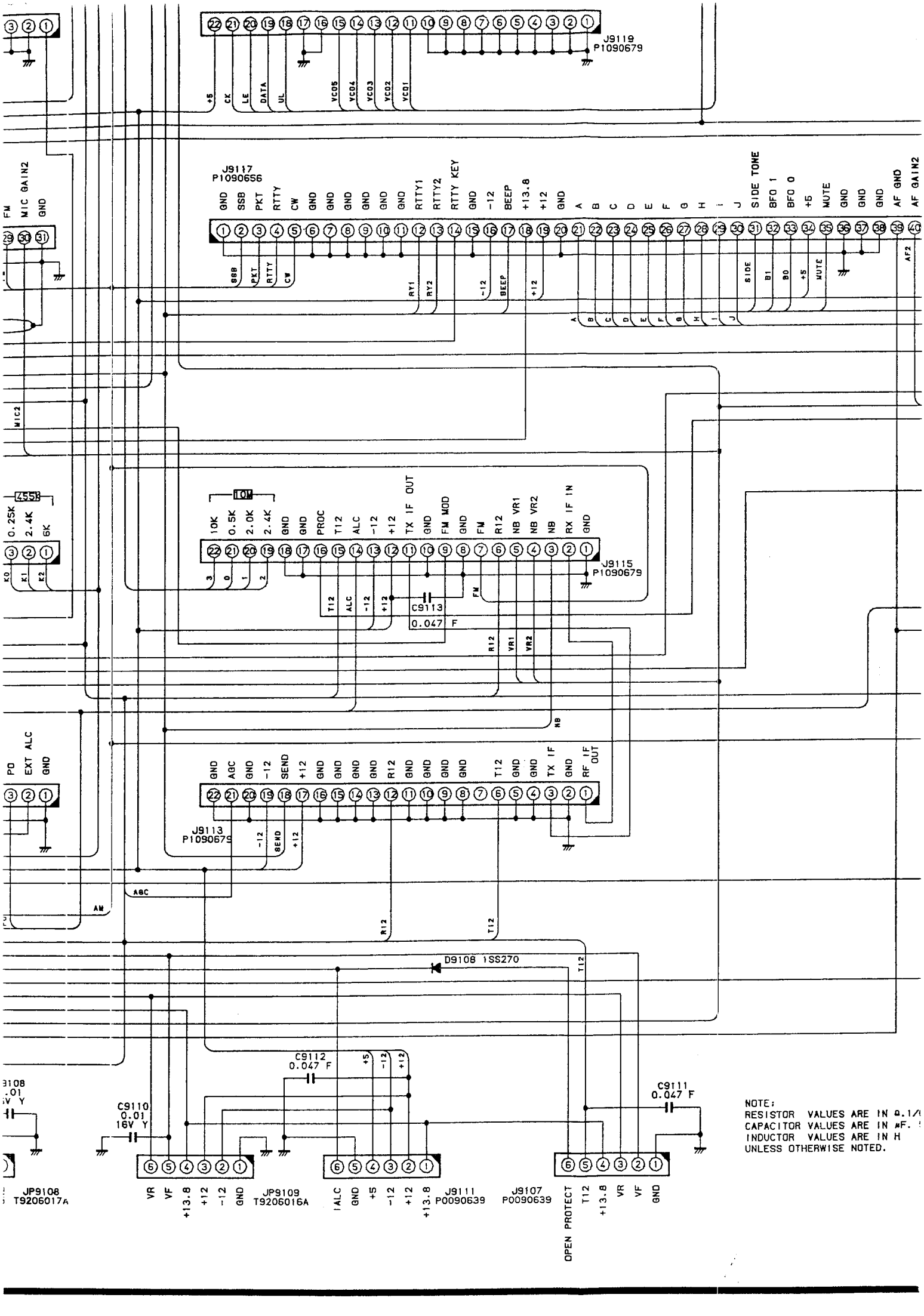
J9119
P1090679
+5
CK
LE
DATA
UL
VCO5
VCO4
VCO3
VCO2
VCO1
J9117
P1090656
GND SSB PKT RTTY CW GND GND GND GND GND GND RTTY1 RTTY2 RTTY KEY GND -12 BEEP +13.8 +12 GND
A B C D E F G H I J
SIDE TONE
BFO 1
BFO 0
+5
MUTE
GND
GND
GND
AF GND
AF GAIN2
AF2
FM MIC GAIN2 GND
MIC2
455K
0.25K 2.4K 6K
K0 K1 K2
10M
10K 0.5K 2.0K 2.4K GND GND PROC T12 ALC -12 +12 TX IF OUT GND FM MOD GND FM R12 NB VR1 NB VR2 NB RX IF IN GND
J9115
P1090679
C9113
0.047 F
PO EXT ALC GND
GND AGC GND -12 SEND +12 GND GND GND GND R12 GND GND GND GND T12 GND GND TX IF GND RF IF OUT
J9113
P1090679
AGC
AM
NB
D9108 1SS270
C9112
0.047 F
C9110
0.01
16V Y
C9111
0.047 F
JP9108
T9206017A
VR VF +13.8 +12 -12 GND
JP9109
T9206016A
ALC GND +5 -12 +12 +13.8
J9111
P0090639
J9107
P0090639
OPEN PROTECT T12 +13.8 VR VF GND
NOTE:
RESISTOR VALUES ARE IN Ω,1/
CAPACITOR VALUES ARE IN μF.
INDUCTOR VALUES ARE IN H
UNLESS OTHERWISE NOTED.

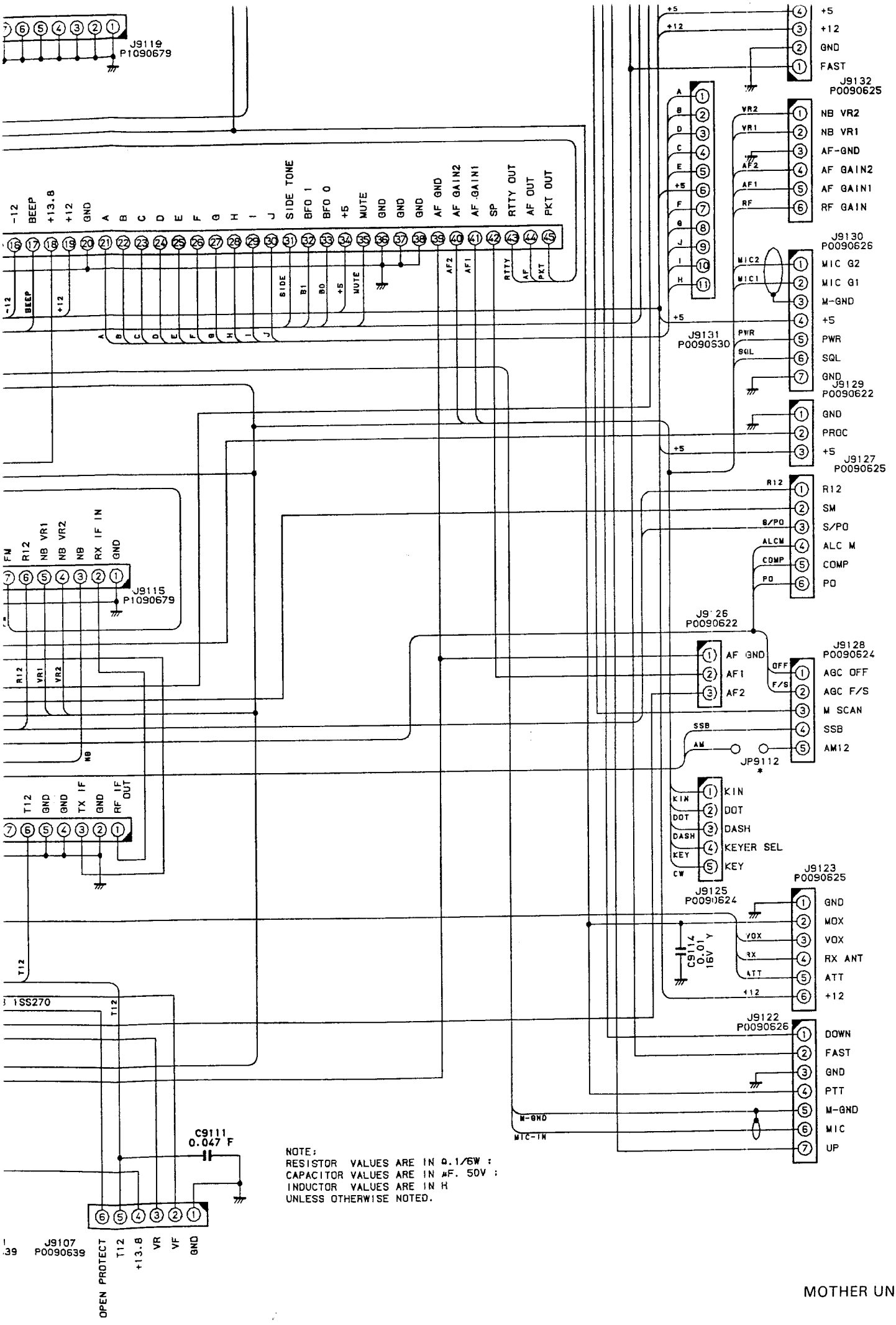

NOTE:
RESISTOR VALUES ARE IN Ω.1/6W :
CAPACITOR VALUES ARE IN μF. 50V :
INDUCTOR VALUES ARE IN H
UNLESS OTHERWISE NOTED.

MOTHER UNIT

J9111
J9103
R910

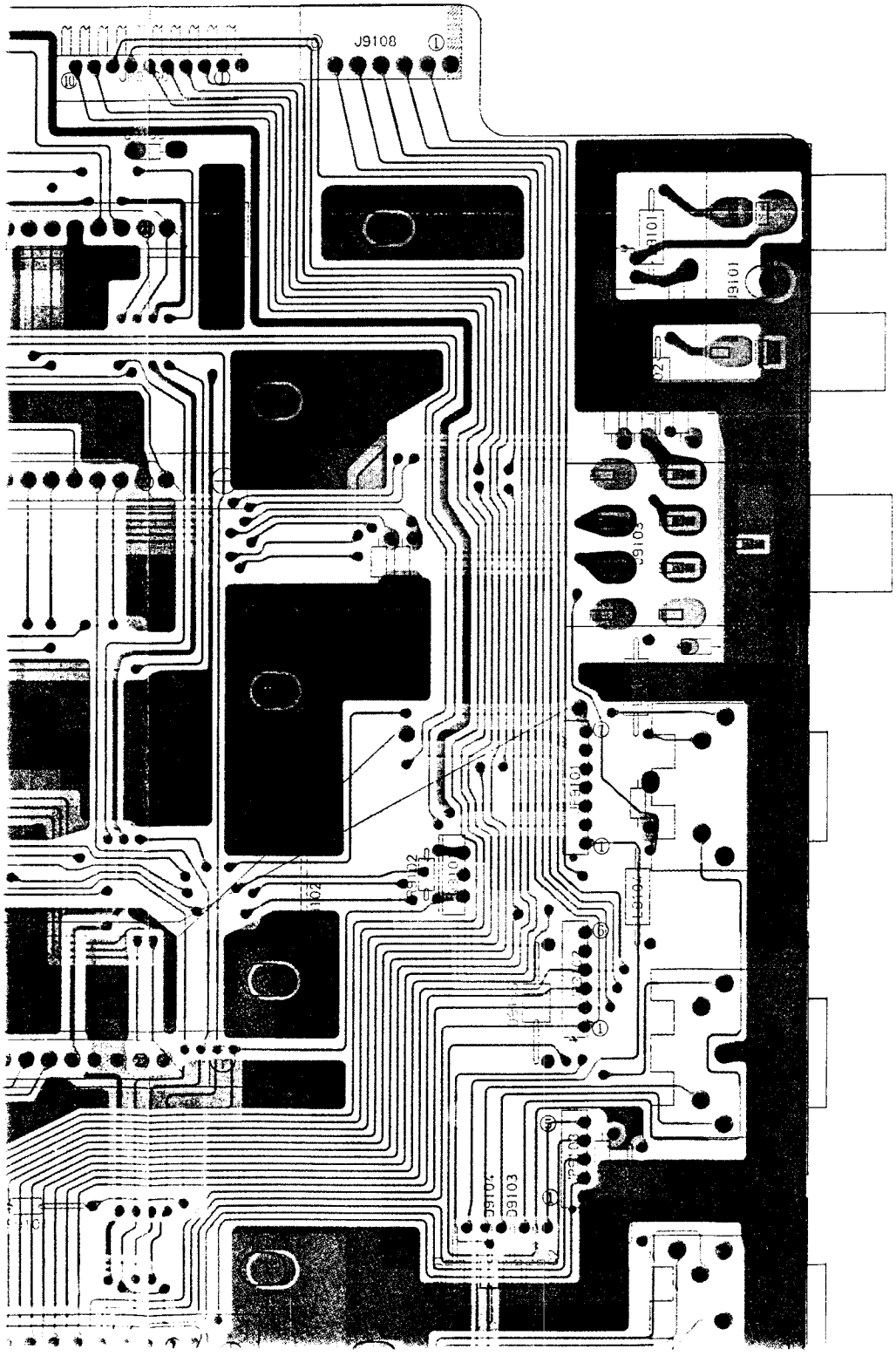
J9108
10
1
R101
C9105
C9101
C9102
C9103
C9104
C9106
C9107
C9108
C9109
C9110
C9111
C9112
C9113
C9114
C9115
C9116
C9117
C9118
C9119
C9120
C9121
C9122
C9123
C9124
C9125
C9126
C9127
C9128
C9129
C9130
C9131
C9132
C9133
C9134
C9135
C9136
C9137
C9138
C9139
C9140
C9141
C9142
C9143
C9144
C9145
C9146
C9147
C9148
C9149
C9150
C9151
C9152
C9153
C9154
C9155
C9156
C9157
C9158
C9159
C9160
C9161
C9162
C9163
C9164
C9165
C9166
C9167
C9168
C9169
C9170
C9171
C9172
C9173
C9174
C9175
C9176
C9177
C9178
C9179
C9180
C9181
C9182
C9183
C9184
C9185
C9186
C9187
C9188
C9189
C9190
C9191
C9192
C9193
C9194
C9195
C9196
C9197
C9198
C9199
C9200
C9201
C9202
C9203
C9204
C9205
C9206
C9207
C9208
C9209
C9210
C9211
C9212
C9213
C9214
C9215
C9216
C9217
C9218
C9219
C9220
C9221
C9222
C9223
C9224
C9225
C9226
C9227
C9228
C9229
C9230
C9231
C9232
C9233
C9234
C9235
C9236
C9237
C9238
C9239
C9240
C9241
C9242
C9243
C9244
C9245
C9246
C9247
C9248
C9249
C9250
C9251
C9252
C9253
C9254
C9255
C9256
C9257
C9258
C9259
C9260
C9261
C9262
C9263
C9264
C9265
C9266
C9267
C9268
C9269
C9270
C9271
C9272
C9273
C9274
C9275
C9276
C9277
C9278
C9279
C9280
C9281
C9282
C9283
C9284
C9285
C9286
C9287
C9288
C9289
C9290
C9291
C9292
C9293
C9294
C9295
C9296
C9297
C9298
C9299
C9300
C9301
C9302
C9303
C9304
C9305
C9306
C9307
C9308
C9309
C9310
C9311
C9312
C9313
C9314
C9315
C9316
C9317
C9318
C9319
C9320
C9321
C9322
C9323
C9324
C9325
C9326
C9327
C9328
C9329
C9330
C9331
C9332
C9333
C9334
C9335
C9336
C9337
C9338
C9339
C9340
C9341
C9342
C9343
C9344
C9345
C9346
C9347
C9348
C9349
C9350
C9351
C9352
C9353
C9354
C9355
C9356
C9357
C9358
C9359
C9360
C9361
C9362
C9363
C9364
C9365
C9366
C9367
C9368
C9369
C9370
C9371
C9372
C9373
C9374
C9375
C9376
C9377
C9378
C9379
C9380
C9381
C9382
C9383
C9384
C9385
C9386
C9387
C9388
C9389
C9390
C9391
C9392
C9393
C9394
C9395
C9396
C9397
C9398
C9399
C9400
C9401
C9402
C9403
C9404
C9405
C9406
C9407
C9408
C9409
C9410
C9411
C9412
C9413
C9414
C9415
C9416
C9417
C9418
C9419
C9420
C9421
C9422
C9423
C9424
C9425
C9426
C9427
C9428
C9429
C9430
C9431
C9432
C9433
C9434
C9435
C9436
C9437
C9438
C9439
C9440
C9441
C9442
C9443
C9444
C9445
C9446
C9447
C9448
C9449
C9450
C9451
C9452
C9453
C9454
C9455
C9456
C9457
C9458
C9459
C9460
C9461
C9462
C9463
C9464
C9465
C9466
C9467
C9468
C9469
C9470
C9471
C9472
C9473
C9474
C9475
C9476
C9477
C9478
C9479
C9480
C9481
C9482
C9483
C9484
C9485
C9486
C9487
C9488
C9489
C9490
C9491
C9492
C9493
C9494
C9495
C9496
C9497
C9498
C9499
C9500
C9501
C9502
C9503
C9504
C9505
C9506
C9507
C9508
C9509
C9510
C9511
C9512
C9513
C9514
C9515
C9516
C9517
C9518
C9519
C9520
C9521
C9522
C9523
C9524
C9525
C9526
C9527
C9528
C9529
C9530
C9531
C9532
C9533
C9534
C9535
C9536
C9537
C9538
C9539
C9540
C9541
C9542
C9543
C9544
C9545
C9546
C9547
C9548
C9549
C9550
C9551
C9552
C9553
C9554
C9555
C9556
C9557
C9558
C9559
C9560
C9561
C9562
C9563
C9564
C9565
C9566
C9567
C9568
C9569
C9570
C9571
C9572
C9573
C9574
C9575
C9576
C9577
C9578
C9579
C9580
C9581
C9582
C9583
C9584
C9585
C9586
C9587
C9588
C9589
C9590
C9591
C9592
C9593
C9594
C9595
C9596
C9597
C9598
C9599
C9600
C9601
C9602
C9603
C9604
C9605
C9606
C9607
C9608
C9609
C9610
C9611
C9612
C9613
C9614
C9615
C9616
C9617
C9618
C9619
C9620
C9621
C9622
C9623
C9624
C9625
C9626
C9627
C9628
C9629
C9630
C9631
C9632
C9633
C9634
C9635
C9636
C9637
C9638
C9639
C9640
C9641
C9642
C9643
C9644
C9645
C9646
C9647
C9648
C9649
C9650
C9651
C9652
C9653
C9654
C9655
C9656
C9657
C9658
C9659
C9660
C9661
C9662
C9663
C9664
C9665
C9666
C9667
C9668
C9669
C9670
C9671
C9672
C9673
C9674
C9675
C9676
C9677
C9678
C9679
C9680
C9681
C9682
C9683
C9684
C9685
C9686
C9687
C9688
C9689
C9690
C9691
C9692
C9693
C9694
C9695
C9696
C9697
C9698
C9699
C9700
C9701
C9702
C9703
C9704
C9705
C9706
C9707
C9708
C9709
C9710
C9711
C9712
C9713
C9714
C9715
C9716
C9717
C9718
C9719
C9720
C9721
C9722
C9723
C9724
C9725
C9726
C9727
C9728
C9729
C9730
C9731
C9732
C9733
C9734
C9735
C9736
C9737
C9738
C9739
C9740
C9741
C9742
C9743
C9744
C9745
C9746
C9747
C9748
C9749
C9750
C9751
C9752
C9753
C9754
C9755
C9756
C9757
C9758
C9759
C9760
C9761
C9762
C9763
C9764
C9765
C9766
C9767
C9768
C9769
C9770
C9771
C9772
C9773
C9774
C9775
C9776
C9777
C9778
C9779
C9780
C9781
C9782
C9783
C9784
C9785
C9786
C9787
C9788
C9789
C9790
C9791
C9792
C9793
C9794
C9795
C9796
C9797
C9798
C9799
C9800
C9801
C9802
C9803
C9804
C9805
C9806
C9807
C9808
C9809
C9810
C9811
C9812
C9813
C9814
C9815
C9816
C9817
C9818
C9819
C9820
C9821
C9822
C9823
C9824
C9825
C9826
C9827
C9828
C9829
C9830
C9831
C9832
C9833
C9834
C9835
C9836
C9837
C9838
C9839
C9840
C9841
C9842
C9843
C9844
C9845
C9846
C9847
C9848
C9849
C9850
C9851
C9852
C9853
C9854
C9855
C9856
C9857
C9858
C9859
C9860
C9861
C9862
C9863
C9864
C9865
C9866
C9867
C9868
C9869
C9870
C9871
C9872
C9873
C9874
C9875
C9876
C9877
C9878
C9879
C9880
C9881
C9882
C9883
C9884
C9885
C9886
C9887
C9888
C9889
C9890
C9891
C9892
C9893
C9894
C9895
C9896
C9897
C9898
C9899
C9900
C9901
C9902
C9903
C9904
C9905
C9906
C9907
C9908
C9909
C9910
C9911
C9912
C9913
C9914
C9915
C9916
C9917
C9918
C9919
C9920
C9921
C9922
C9923
C9924
C9925
C9926
C9927
C9928
C9929
C9930
C9931
C9932
C9933
C9934
C9935
C9936
C9937
C9938
C9939
C9940
C9941
C9942
C9943
C9944
C9945
C9946
C9947
C9948
C9949
C9950
C9951
C9952
C9953
C9954
C9955
C9956
C9957
C9958
C9959
C9960
C9961
C9962
C9963
C9964
C9965
C9966
C9967
C9968
C9969
C9970
C9971
C9972
C9973
C9974
C9975
C9976
C9977
C9978
C9979
C9980
C9981
C9982
C9983
C9984
C9985
C9986
C9987
C9988
C9989
C9990
C9991
C9992
C9993
C9994
C9995
C9996
C9997
C9998
C9999
C10000

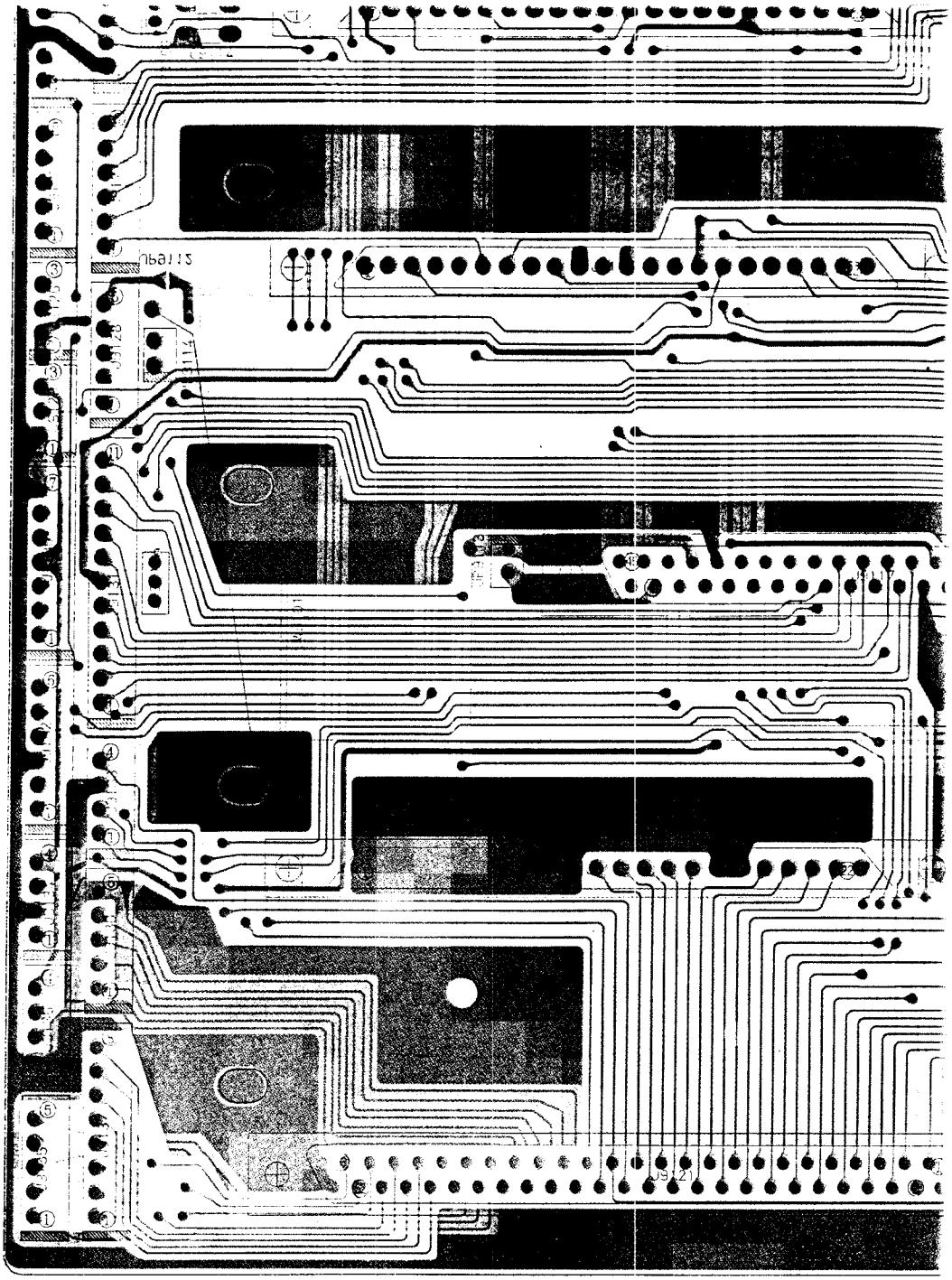

F3175@00A

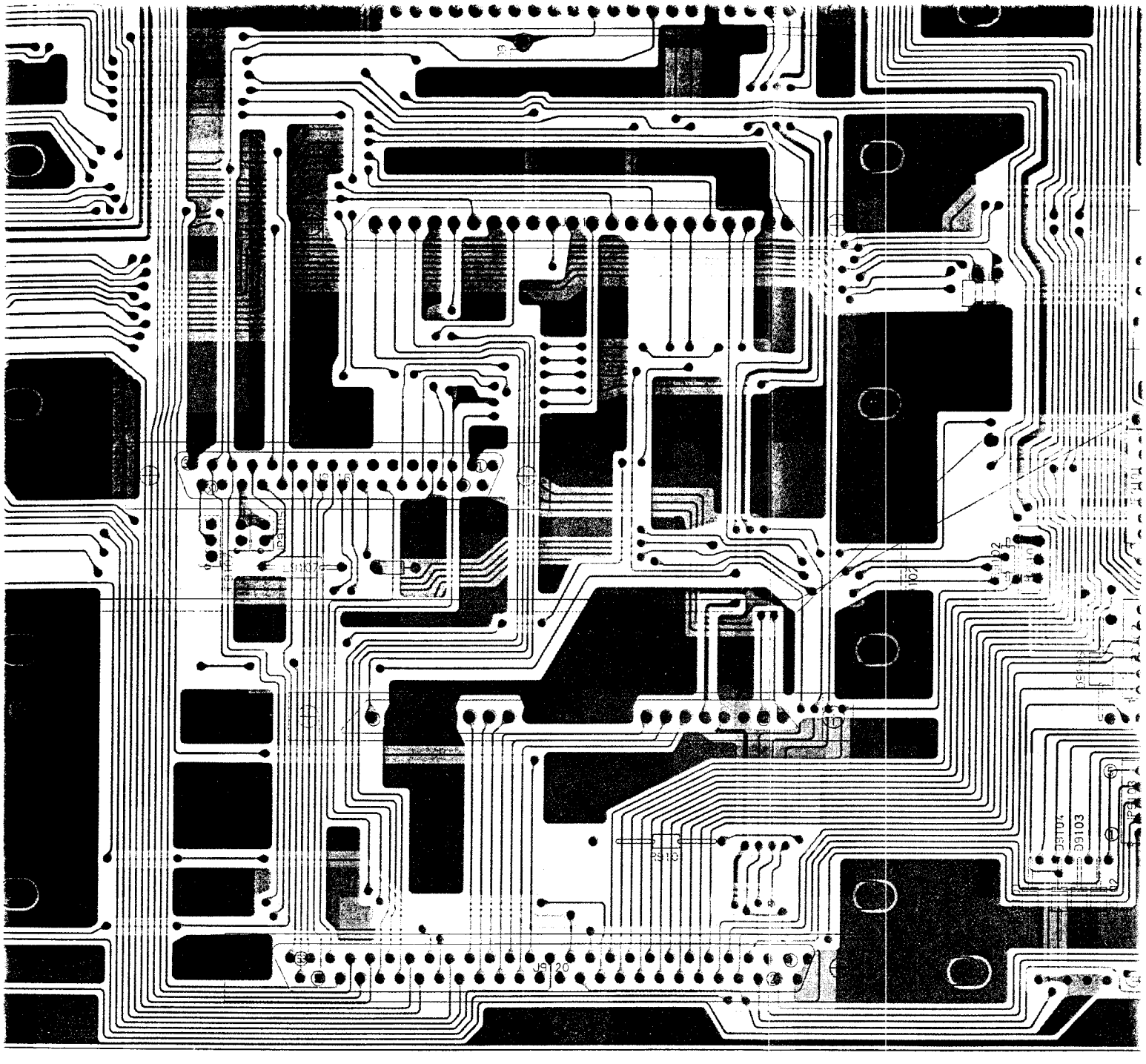
J9120
D9103

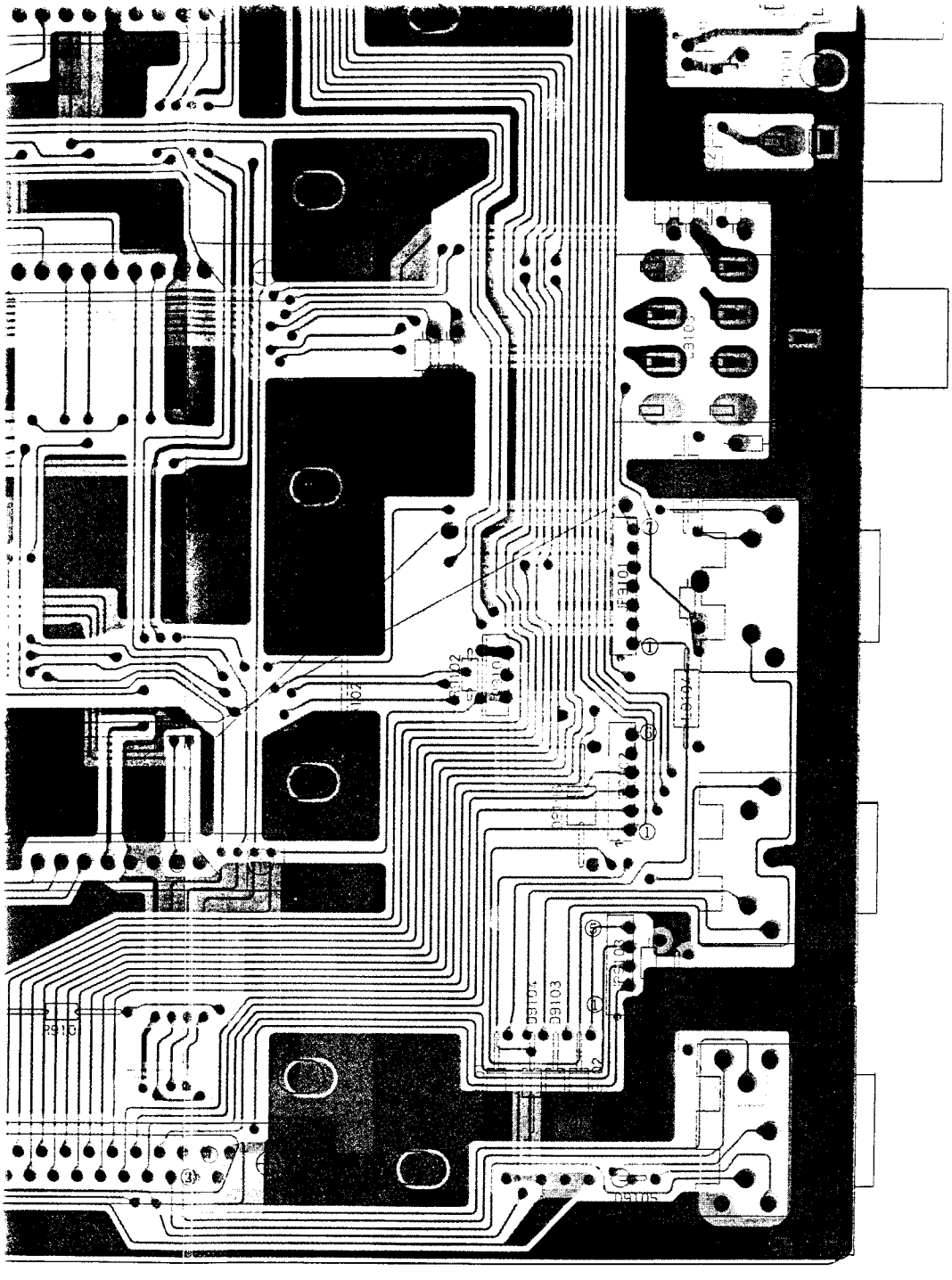

("component" side)

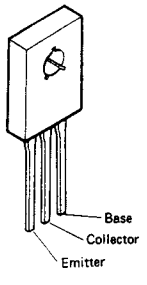

2SD669A
(Q9101)

Moterboard (Mother Unit)

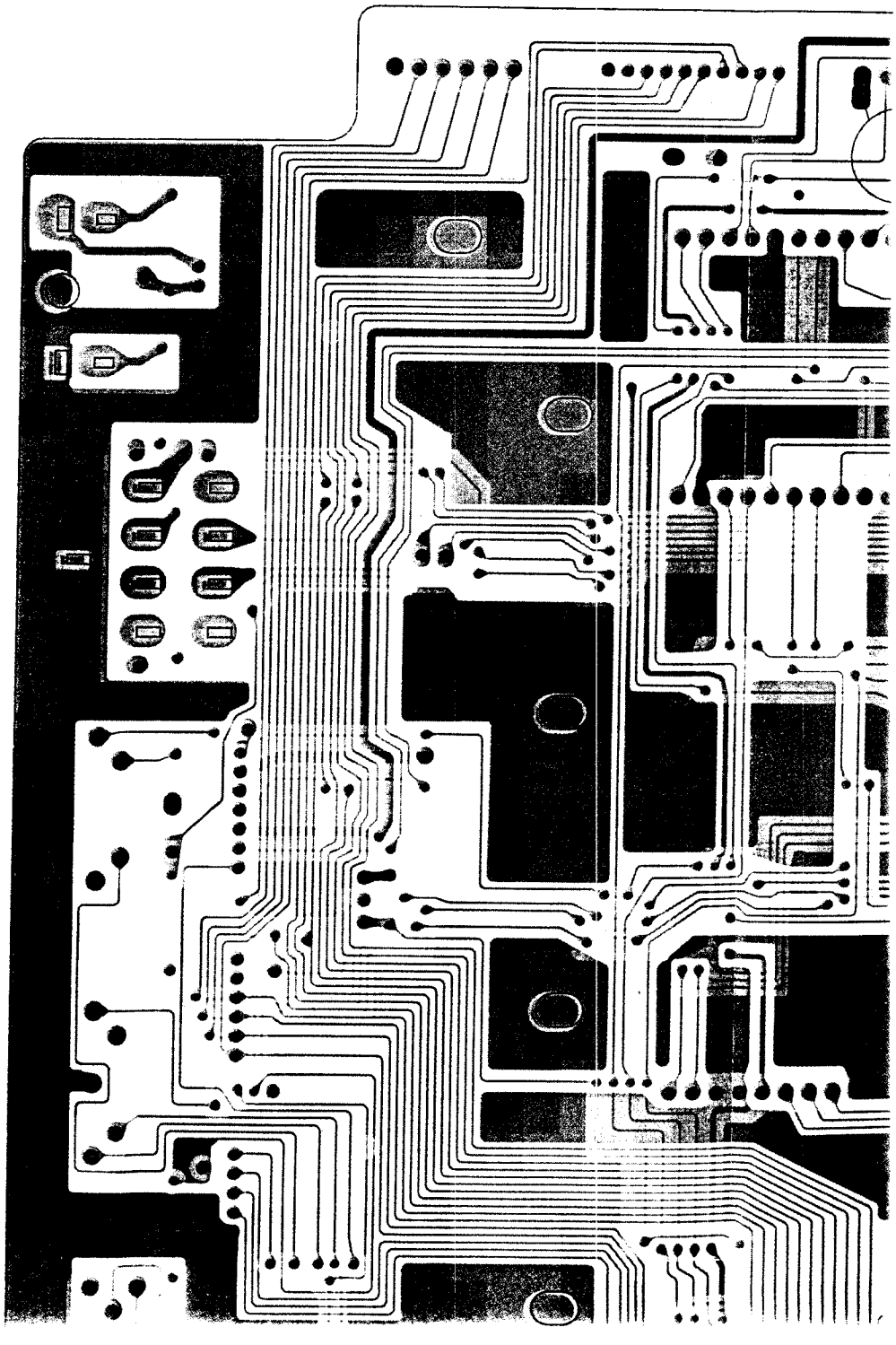

C911
99412

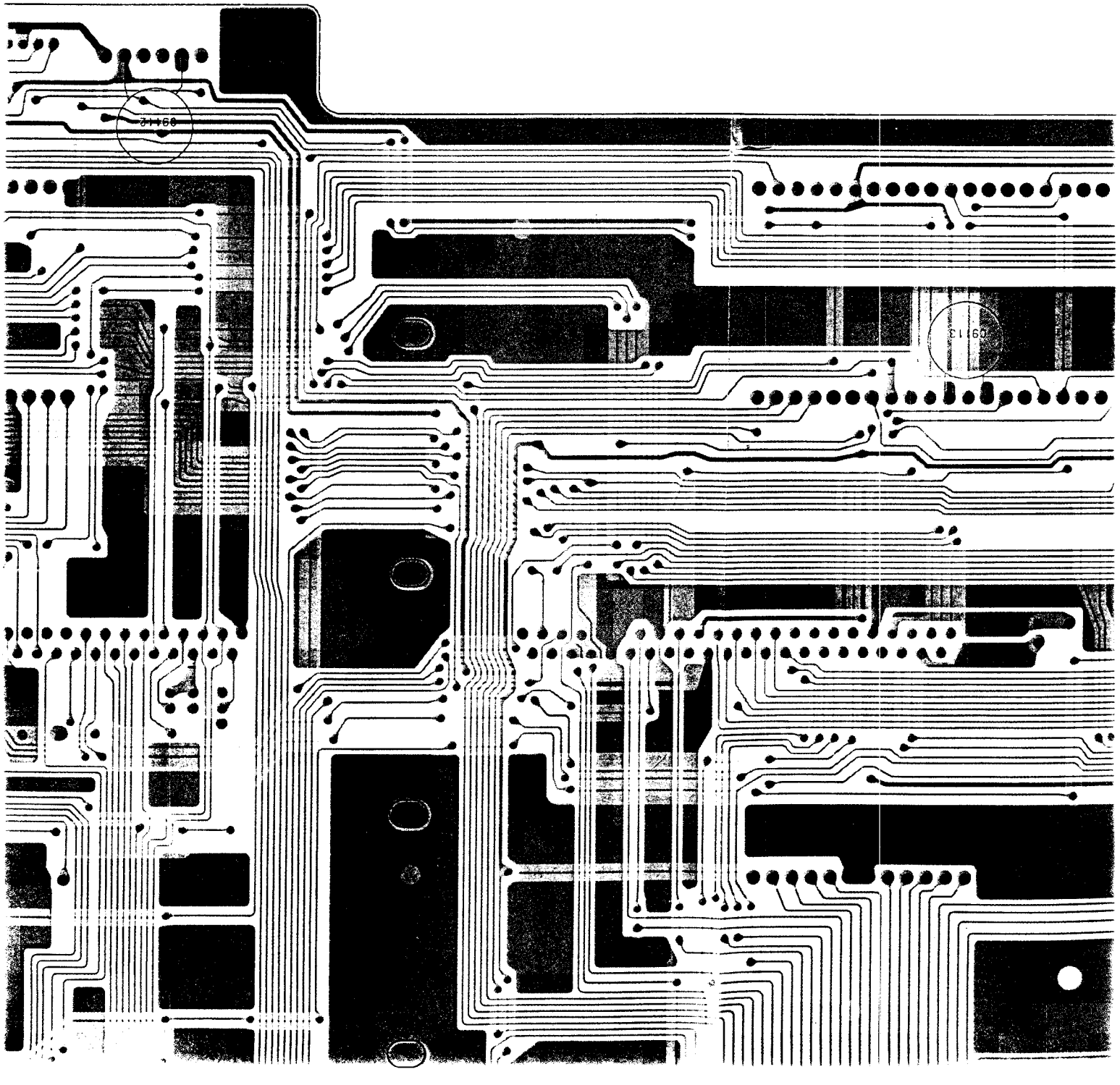

C913
JP9112

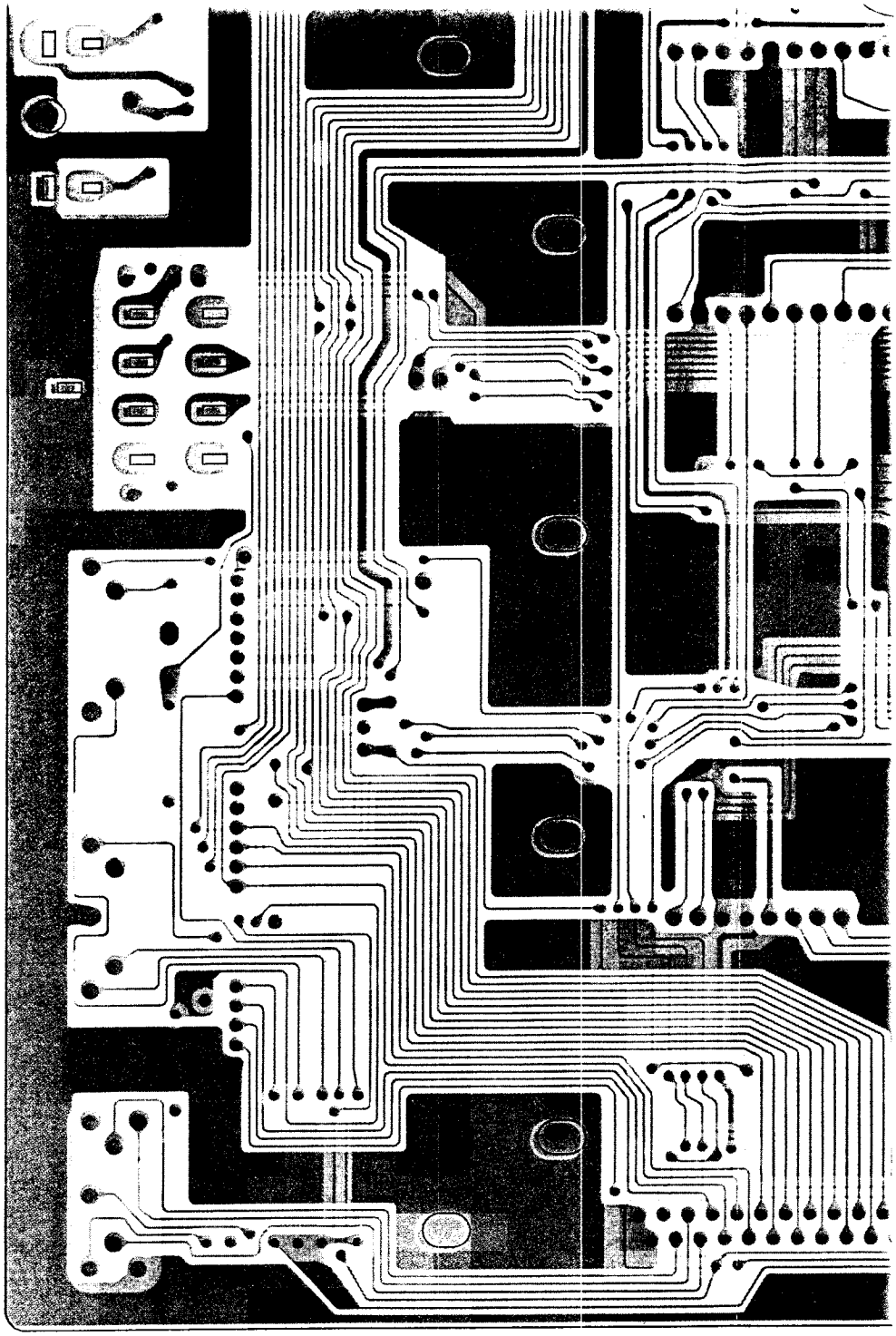

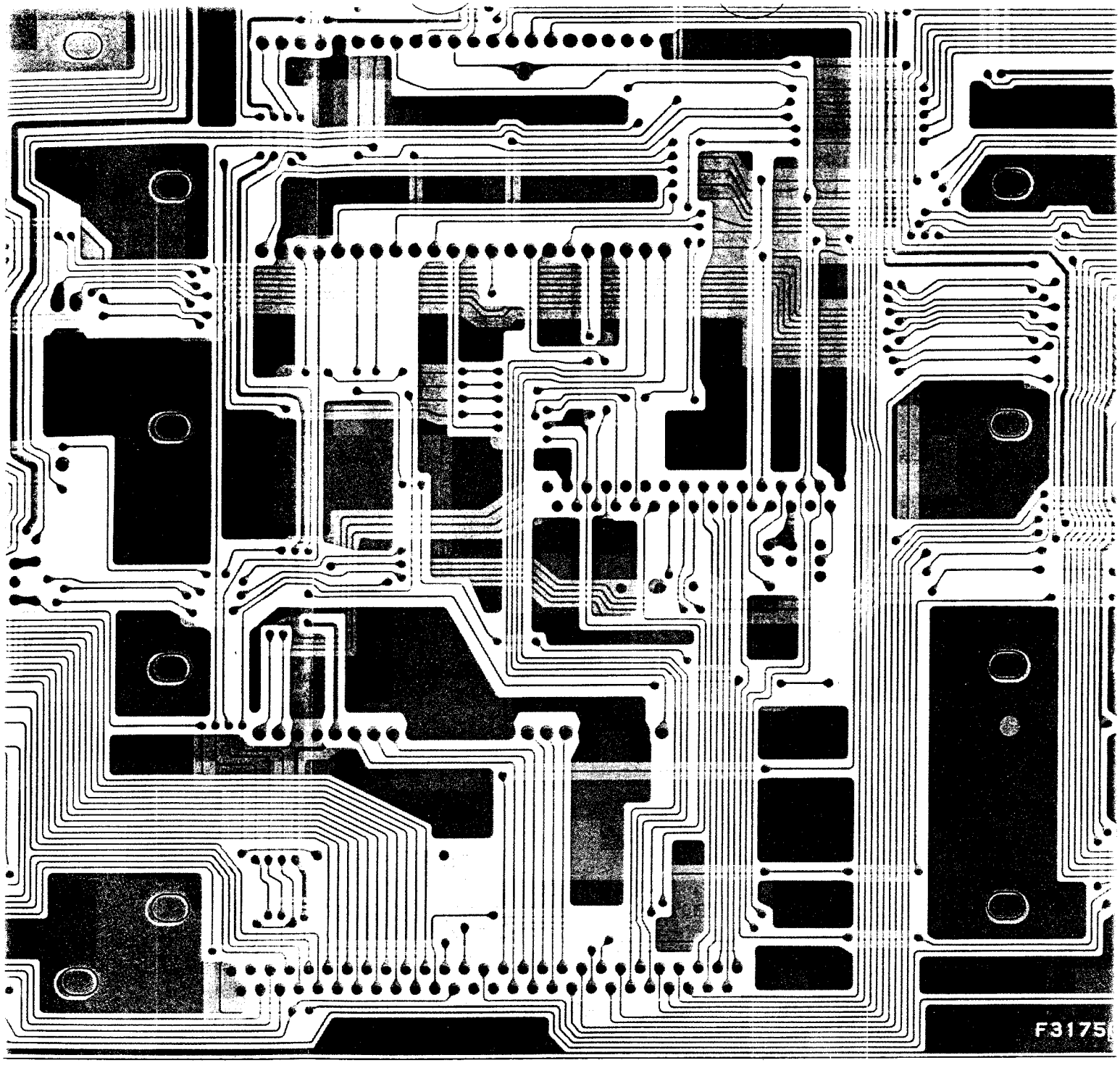
F3175

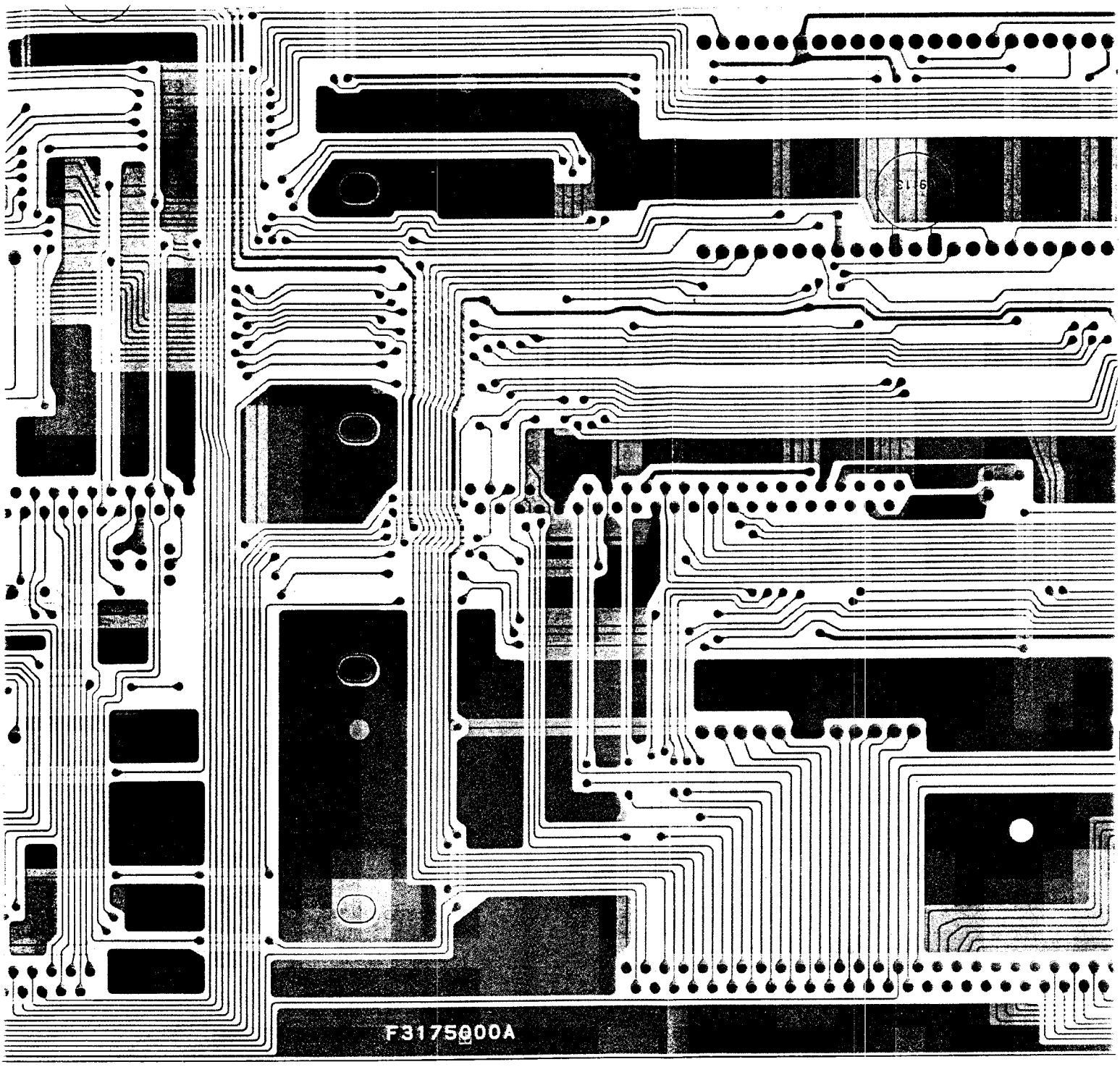
C16
F3175000A

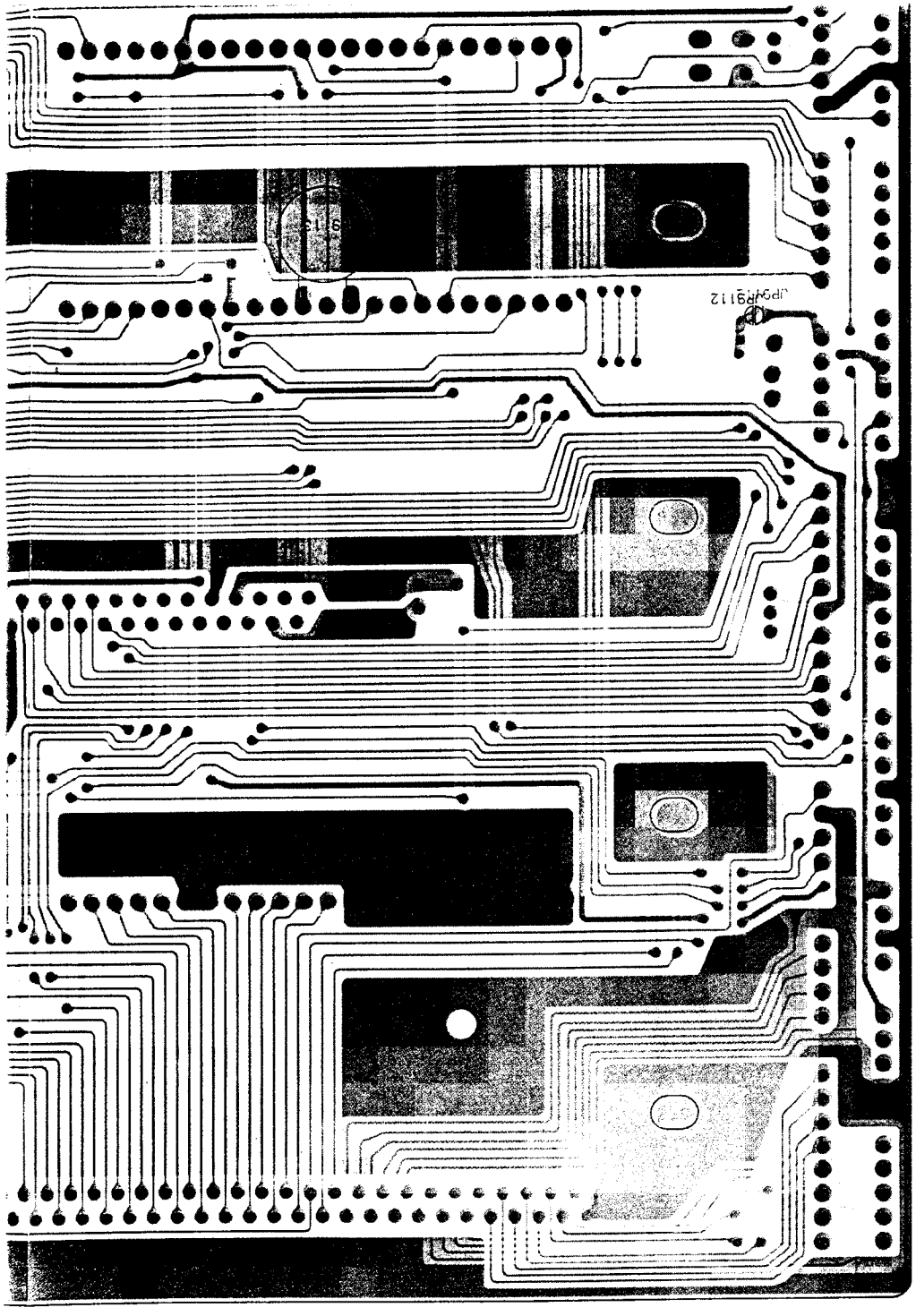

("solder" side)

REF.	YAESU P/N	DESCRIPTION	MFGR'S DESIG	VALUE	WV	TOL.	VERS.
		*** MOTHER BOARD ***					
	CA0296001	P.C.B. W COMP.					
	F3175000A	P.C.B. W/O COMP.					
C 9108	K28129001	CERAMIC CAP.	EP050Y103N-A	0.01uF	16V	Y	
C 9109	K28129001	CERAMIC CAP.	EP050Y103N-A	0.01uF	16V	Y	
C 9110	K28129001	CERAMIC CAP.	EP050Y103N-A	0.01uF	16V	Y	
C 9111	K13179009	CERAMIC CAP.	DD110F473Z50	0.047uF	50V	F	
C 9112	K13179009	CERAMIC CAP.	DD110F473Z50	0.047uF	50V	F	
C 9113	K13179009	CERAMIC CAP.	DD110F473Z50	0.047uF	50V	F	
C 9114	K28129001	CERAMIC CAP.	EP050Y103N-A	0.01uF	16V	Y	
D 9101	G2090408	DIODE	1SS270				
D 9102	G2090408	DIODE	1SS270				
D 9103	G2090408	DIODE	1SS270				
D 9104	G2090408	DIODE	1SS270				
D 9105	G2090408	DIODE	1SS270				
D 9106	G2090002	DIODE	10D10				
D 9108	G2090408	DIODE	1SS270				
J 9101	P1090632	CONNECTOR	JPJ2042-01-120				
J 9103	P1090351	CONNECTOR	S-G4617#03				
J 9104	P1090645	CONNECTOR	TCS5073-14-4151				
J 9105	P1090646	CONNECTOR	TCS5073-15-4151				
J 9106	P1090648	CONNECTOR	TCS5073-17-4151				
J 9107	P0090639	CONNECTOR	SC25-06WL				
J 9108	P0090639	CONNECTOR	SC25-06WL				
J 9111	P0090639	CONNECTOR	SC25-06WL				
J 9112	P1090679	CONNECTOR	PCN6-22S-2.5DS				
J 9113	P1090679	CONNECTOR	PCN6-22S-2.5DS				
J 9114	P1090679	CONNECTOR	PCN6-22S-2.5DS				
J 9115	P1090679	CONNECTOR	PCN6-22S-2.5DS				
J 9116	P1090655	CONNECTOR	PCN5D-31ST-1.27DS				
J 9117	P1090656	CONNECTOR	PCN5D-45ST-1.27DS				
J 9118	P1090679	CONNECTOR	PCN6-22S-2.5DS				
J 9119	P1090679	CONNECTOR	PCN6-22S-2.5DS				
J 9120	P1090673	CONNECTOR	PCN5D-53ST-1.27DS				
J 9121	P1090673	CONNECTOR	PCN5D-53ST-1.27DS				
J 9122	P0090626	CONNECTOR	SC25-07WS				
J 9123	P0090625	CONNECTOR	SC25-06WS				
J 9125	P0090624	CONNECTOR	SC25-05WS				
J 9126	P0090622	CONNECTOR	SC25-03WS				
J 9127	P0090625	CONNECTOR	SC25-06WS				
J 9128	P0090624	CONNECTOR	SC25-05WS				
J 9129	P0090622	CONNECTOR	SC25-03WS				
J 9130	P0090626	CONNECTOR	SC25-07WS				
J 9131	P0090630	CONNECTOR	SC25-11WS				
J 9132	P0090625	CONNECTOR	SC25-06WS				
J 9133	P0090623	CONNECTOR	SC25-04WS				
J 9134	P0090623	CONNECTOR	SC25-04WS				
J 9135	P0090624	CONNECTOR	SC25-05WS				
J 9136	P0090623	CONNECTOR	SC25-04WS				
J 9137	P0090627	CONNECTOR	SC25-08WS				

Motherboard (Mother Unit)

REF.	YAESU P/N	DESCRIPTION	MFGR'S DESIG	VALUE	WV	TOL.	VERS.
J 9138	P0090624	CONNECTOR	SC25-05WS				
JP9101	T9206038A	WIRE-ASSY					
JP9102	T9206039	WIRE-ASSY					
JP9103	T9206040	WIRE-ASSY					
JP9104	T9206056	WIRE-ASSY					
JP9106	T9206055	WIRE-ASSY					
JP9108	T9206017A	WIRE-ASSY					
JP9109	T9206016A	WIRE-ASSY					
JP9110	T9206077	WIRE-ASSY					
L 9101	L1190189	M.RFC	LAL03NA102K	1mH			
L 9102	L1190189	M.RFC	LAL03NA102K	1mH			
L 9103	L1190189	M.RFC	LAL03NA102K	1mH			
L 9104	L1190189	M.RFC	LAL03NA102K	1mH			
L 9105	L1190189	M.RFC	LAL03NA102K	1mH			
L 9107	L1190189	M.RFC	LAL03NA102K	1mH			
Q 9101	G3406691	TRANSISTOR	2SD669A				
R 9101	J01225102	CARBON FILM RES.	RD16PJ102	1K	1/6W		
R 9102	J01225472	CARBON FILM RES.	RD16PJ472	4.7K	1/6W		

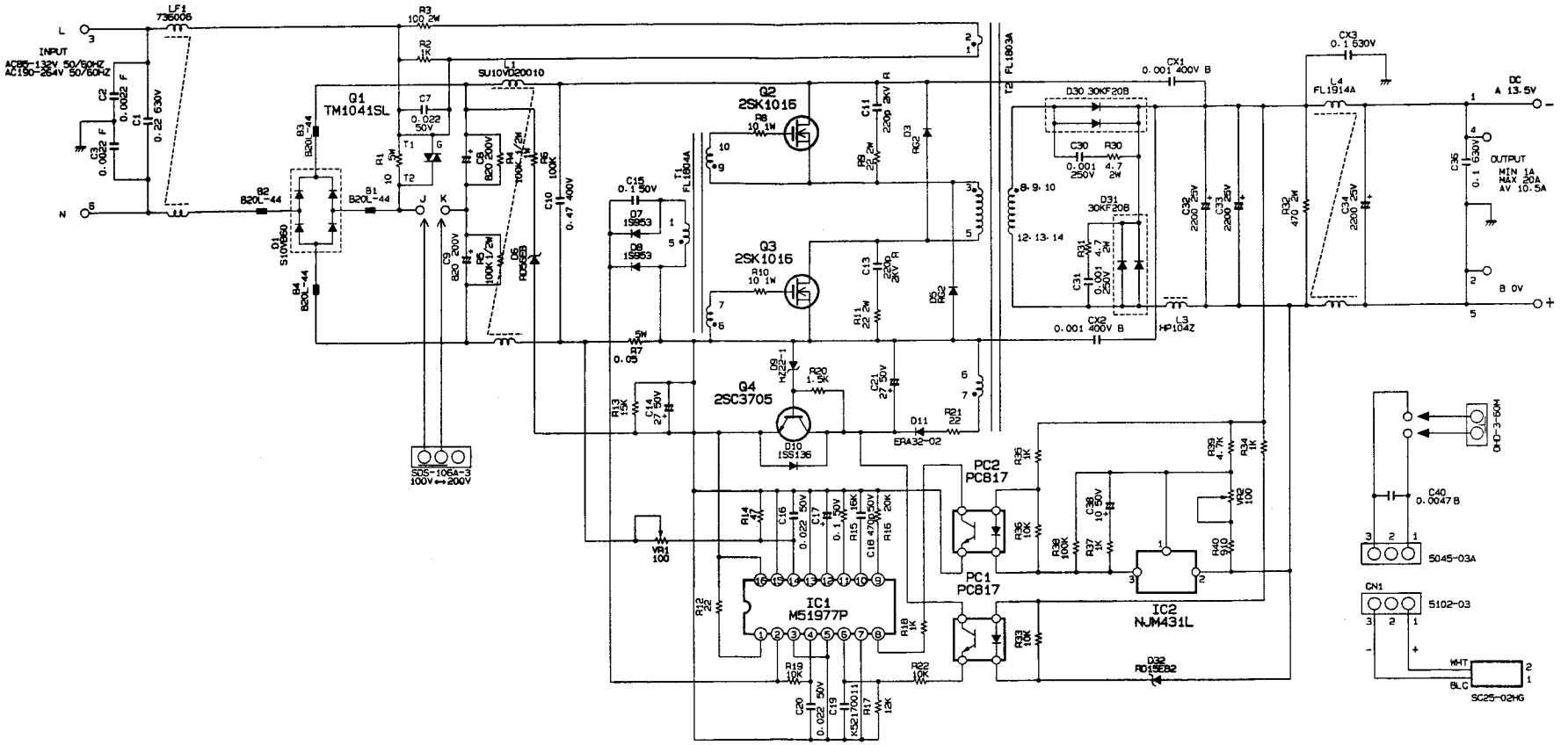

NOTE:
RESISTOR VALUES ARE IN Ω, 1/6W ;
CAPACITOR VALUES ARE IN μF, 50V ;
INDUCTOR VALUES ARE IN H ;
COILES VALUES ARE IN H ;
UNLESS OTHERWISE NOTED.

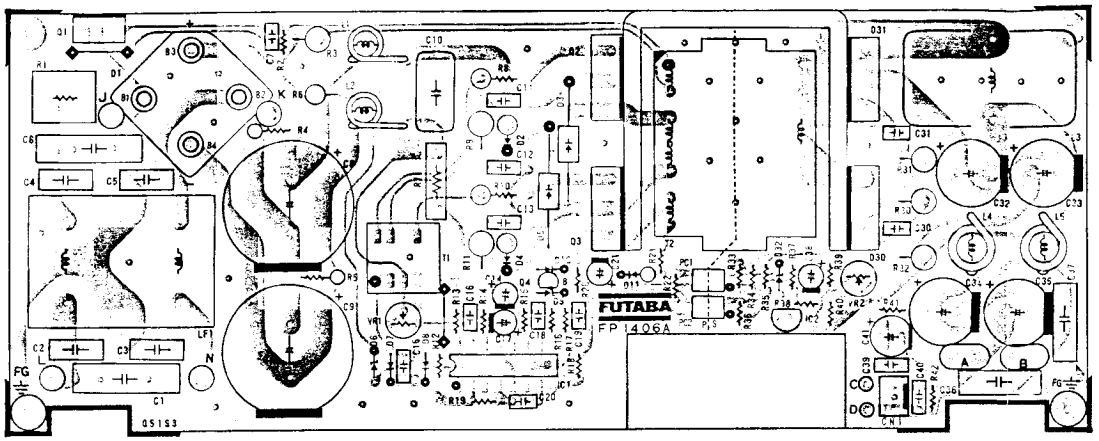

("component" side)

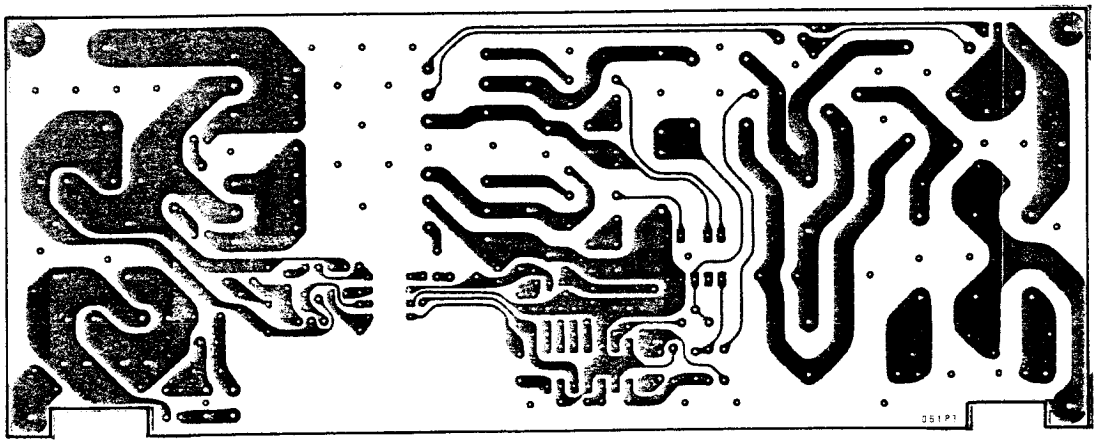

("solder" side)

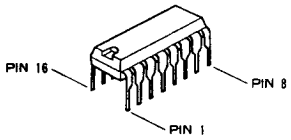

M51977P
(IC0001)

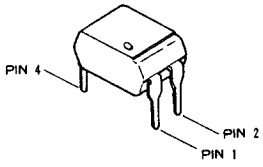

PC817
(PC0001, 0002)

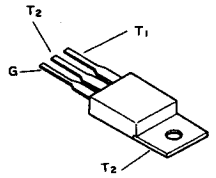

TM1041SL
(Q0001)

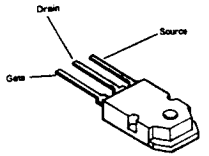

2SK1016
(Q0002, 0003)

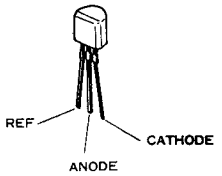

NJM431L
(IC0002)

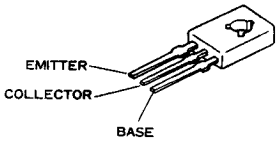

2SC3705
(Q0004)

NJM431L (TO-92) CIRCUIT DIAGRAM

REF.	YAESU P/N	DESCRIPTION	MFGR'S DESIG	VALUE	WV	TOL.	VERS.
		*** PS UNIT ***					
B 0001	L9190071	FERITE BEADS	B20L-44				
B 0002	L9190071	FERITE BEADS	B20L-44				
B 0003	L9190071	FERITE BEADS	B20L-44				
B 0004	L9190071	FERITE BEADS	B20L-44				
C 0001	K52280006	FILM CAP.	MMH224K630	0.22uF	630V		
C 0002	K13269003	CERAMIC CAP.	DE7100F222MVA1-KC	0.0022uF		F	
C 0003	K13269003	CERAMIC CAP.	DE7100F222MVA1-KC	0.0022uF		F	
C 0007	K52170008	FILM CAP.	AMZ223K50	0.22uF	50V		
C 0008	K40239004	AL. ELECTRO. CAP.	CEAWF2D821M20	820uF	200V		
C 0009	K40239004	AL. ELECTRO. CAP.	CEAWF2D821M20	820uF	200V		
C 0010	K52260001	FILM CAP.	ECQE4474KF	0.47uF	400V		
C 0011	K10339001	CERAMIC CAP.	DE5077R221K2K	220pF	2KV	R	
C 0013	K10339001	CERAMIC CAP.	DE5077R221K2K	220pF	2KV	R	
C 0014	K40179051	AL. ELECTRO. CAP.	ECEA1HFE270	27uF	50V		
C 0015	K52170009	FILM CAP.	AMZ104K50	0.1uF	50V		
C 0016	K52170008	FILM CAP.	AMZ223K50	0.022uF	50V		
C 0017	K40179054	AL. ELECTRO. CAP.	CEUSM1HR10	0.1uF	50V		
C 0018	K52170010	FILM CAP.	AMZ471K50	470pF	50V		
C 0019	K52170011	FILM CAP.	AMZ473K50	0.047uF	50V		
C 0020	K52170008	FILM CAP.	AMZ223K50	0.022uF	50V		
C 0021	K40179051	AL. ELECTRO. CAP.	ECEA1HFE270	27uF	50V		
C 0030	K52240005	FILM CAP.	AMZ102K250	0.001uF	250V		
C 0031	K52240005	FILM CAP.	AMZ102K250	0.001uF	250V		
C 0032	K40149038	AL. ELECTRO. CAP.	ECA1EFQ222L	2200uF	25V		
C 0033	K40149038	AL. ELECTRO. CAP.	ECA1EFQ222L	2200uF	25V		
C 0034	K40149038	AL. ELECTRO. CAP.	ECA1EFQ222L	2200uF	25V		
C 0036	K52280007	FILM CAP.	MMH104K630	0.1uF	630V		
C 0038	K40179053	AL. ELECTRO. CAP.	CEUSM1H100	10uF	50V		
C 0040	K10179038	CERAMIC CAP.	DD108B472K50	0.0047uF	50V	B	
CN0001	P0090219	CONNECTOR	5045-03A				
CX0001	K10269002	CERAMIC CAP.	DE7090B102KVA1-KC	0.001uF	400V	B	
CX0002	K10269002	CERAMIC CAP.	DE7090B102KVA1-KC	0.001uF	400V	B	
CX0003	K52280008	FILM CAP.	MMH103K630	0.01uF	630V		
D 0001	G2090501	DIODE	S10VB60				
D 0003	G2090502	DIODE	RG2				
D 0005	G2090502	DIODE	RG2				
D 0006	G2090503	DIODE	RD56EB				
D 0007	G2009530	DIODE	1S953				
D 0008	G2009530	DIODE	1S953				
D 0009	G2090455	DIODE	HZ22-1				
D 0010	G2090504	DIODE	1SS136				
D 0011	G2090505	DIODE	ERA32-02				
D 0030	G2090506	DIODE	30KF20B				
D 0031	G2090506	DIODE	30KF20B				
D 0032	G2090507	DIODE	RD15EB2				
IC0001	G1091275	IC	M51977P				
IC0002	G1091276	IC	NJM431L				
L 0001	S8100251	RFC	SU10VD20010				

Power Supply (PS) Unit

REF.	YAESU P/N	DESCRIPTION	MFGR'S DESIG	VALUE	WV	TOL.	VERS.
L 0003	S8100205	RFC	HP104Z				
L 0004	S8100252	RFC	FL1914A				
LF0001	S8100201	LINE FILTER	736006				
PC0001	G0090006	PHOTO COUPLER	PC817				
PC0002	G0090006	PHOTO COUPLER	PC817				
Q 0001	G3090096	TRIAC	TM1041SL				
Q 0002	G3810160	FET	2SK1016				
Q 0003	G3810160	FET	2SK1016				
Q 0004	G3337050	TRANSISTOR	2SC3705				
R 0001	J31379001	FUSE RES.	A53K10J 10	10	5W		
R 0002	J01225102	CARBON FILM RES.	RD16PJ102	1K	1/6W		
R 0003	J22335101	METAL FILM RES.	ERG-2SJ101	100	2W		
R 0004	J01275104	CARBON FILM RES.	RD12TJ104	100K	1/2W		
R 0005	J01275104	CARBON FILM RES.	RD12TJ104	100K	1/2W		
R 0006	J22305104	METAL FILM RES.	RSU1-100K J	100K	1W		
R 0007	J31379002	CEMENT RES.	MPC75-0.05 K	0.05	5W		
R 0008	J22305100	METAL FILM RES.	ERG-1SJ100 10	10	1W		
R 0009	J22335220	METAL FILM RES.	ERG-2SJ220	22	2W		
R 0010	J22305100	METAL FILM RES.	ERG-1SJ100 10	10	1W		
R 0011	J22335220	METAL FILM RES.	ERG-2SJ220	22	2W		
R 0012	J01225220	CARBON FILM RES.	RD16PJ220	22	1/6W		
R 0013	J01225153	CARBON FILM RES.	RD16PJ153	15K	1/6W		
R 0014	J01225470	CARBON FILM RES.	RD16PJ470	47	1/6W		
R 0015	J01225163	CARBON FILM RES.	RD16PJ163	16K	1/6W		
R 0016	J01225203	CARBON FILM RES.	RD16PJ203	20K	1/6W		
R 0017	J01225123	CARBON FILM RES.	RD16PJ123	12K	1/6W		
R 0018	J01225102	CARBON FILM RES.	RD16PJ102	1K	1/6W		
R 0019	J01225103	CARBON FILM RES.	RD16PJ103	10K	1/6W		
R 0020	J01225152	CARBON FILM RES.	RD16PJ152	1.5K	1/6W		
R 0021	J01225220	CARBON FILM RES.	RD16PJ220	22	1/6W		
R 0022	J01225103	CARBON FILM RES.	RD16PJ103	10K	1/6W		
R 0030	J22335479	METAL FILM RES.	ERX-2SJ4R7	4.7	2W		
R 0031	J22335479	METAL FILM RES.	ERX-2SJ4R7	4.7	2W		
R 0032	J22339007	METAL FILM RES.	ERG-2SJ471	470	2W		
R 0033	J01225103	CARBON FILM RES.	RD16PJ103	10K	1/6W		
R 0034	J01225102	CARBON FILM RES.	RD16PJ102	1K	1/6W		
R 0035	J01225102	CARBON FILM RES.	RD16PJ102	1K	1/6W		
R 0036	J01225103	CARBON FILM RES.	RD16PJ103	10K	1/6W		
R 0037	J01225102	CARBON FILM RES.	RD16PJ102	1K	1/6W		
R 0038	J01225104	CARBON FILM RES.	RD16PJ104	100K	1/6W		
R 0039	J01225472	CARBON FILM RES.	RD16PJ472	4.7K	1/6W		
R 0040	J01225911	CARBON FILM RES.	RD16PJ911	910	1/6W		
T 0001	S8100202	DRIVER TRANS.	FL1804A				
T 0002	S8100203	CONVERTER TRANS.	FL1803A				
VR0001	S8100207	POT.	EVN-38C-A00-B12	100			
VR0002	S8100207	POT.	EVN-38C-A00-B12	100			

Mechanical Details

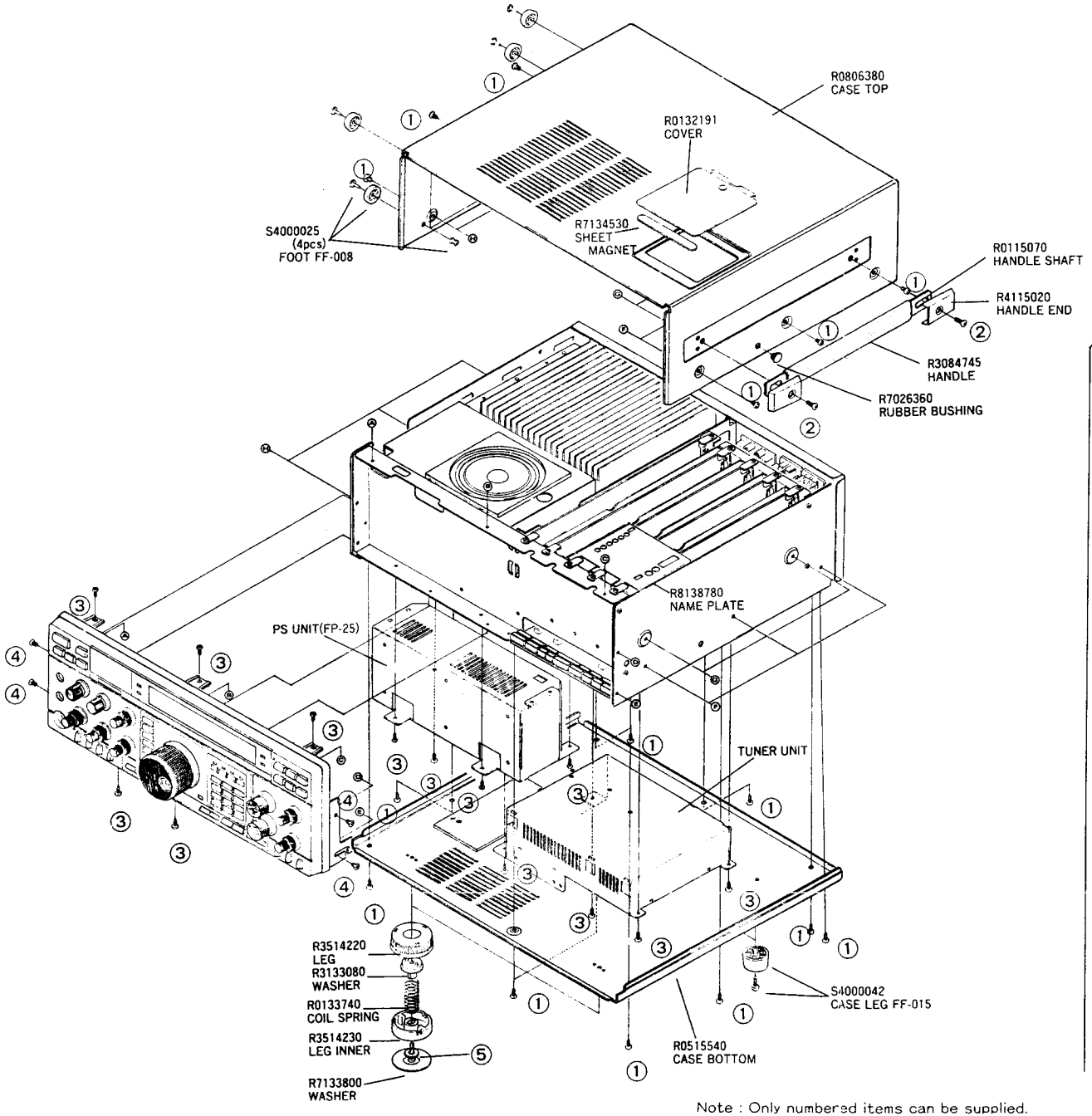

SCREW LIST			
Ref No.	YAESU P/N	Description	Qty.
①	U20404007	BINDING HEAD SCREW M4×4B	16
②	U31410007	OVAL HEAD SCREW M4×10B	2
③	U24305001	TAPTITE SCREW M3×5	13
④	U46308201	TAPPING SCREW M3×8	4
⑤	U22416007	SEMS SCREW HM4×16B	2

Packaging

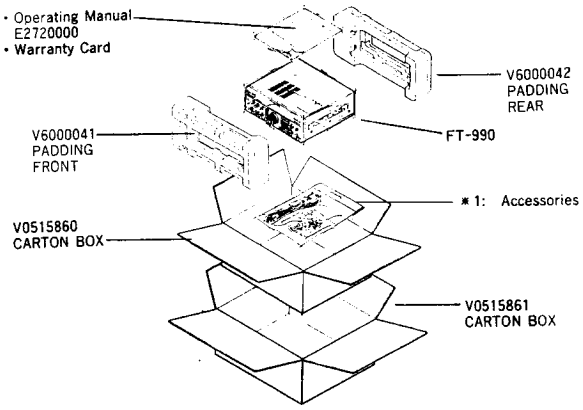

✱1: Accessories
- 1/2-inch, 3-contact Plug S-H3603 (P0090008)
- 1/4-inch, 2-contact Plug C107 (P0090034)
- RCA Plug T-1447 (P0090544)
- 4-pin DIN Plug E4-701B-00 (P0090724)
- 5-pin DIN Plug E5-701B-00 (P0090725)
- 8-pin DIN Plug E8G-701B-00 (P0090816)
- AC Cords

T9013280	117V 2W, 220V 2W	VOL. 21, 41
T9013282	117V 3W (UL)	VOL. 22
T9013283	234V 3WP	VOL. 54
T9013285	220V 3W (EU), 234V 3W (EU)	VOL. 43, 53

- Fuses

Q0000006	4A	VOL. 21, 22
Q0000039	8A	VOL. 41, 43, 53, 54

Note : Only numbered items can be supplied.

Exploded View (Tuner Unit)

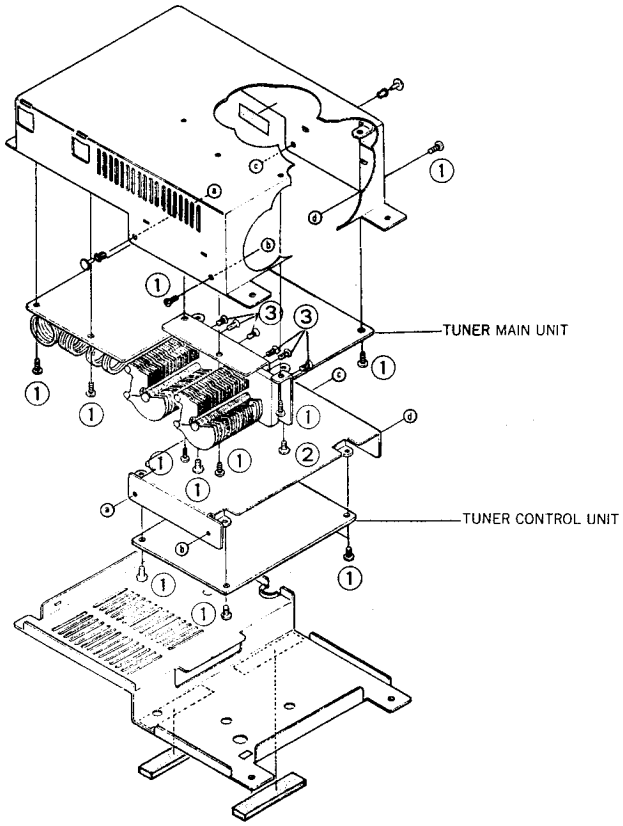

SCREW LIST			
Ref No.	YAESU P/N	Description	Qty.
①	U24305001	TAPTITE SCREW M3×5	15
②	U24308001	TAPTITE SCREW M3×8	1
③	U30306001	FLAT HEAD SCREW M3×6	6

Exploded View (PS Unit)

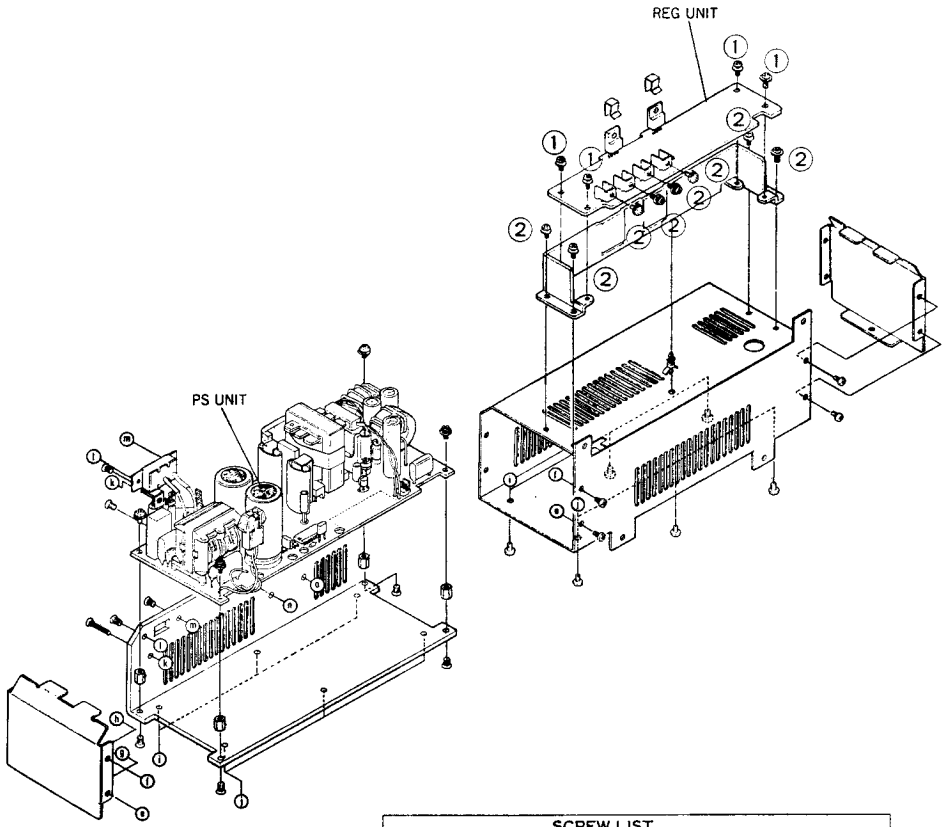

SCREW LIST			
Ref No.	YAESU P/ N	Description	Qty.
①	U24305001	TAPTITE SCREW M3×5	4
②	U03306001	SEMS SCREW ASM3×6	8

Note : Only numbered items can be supplied.

Exploded View (Front Panel Assembly)

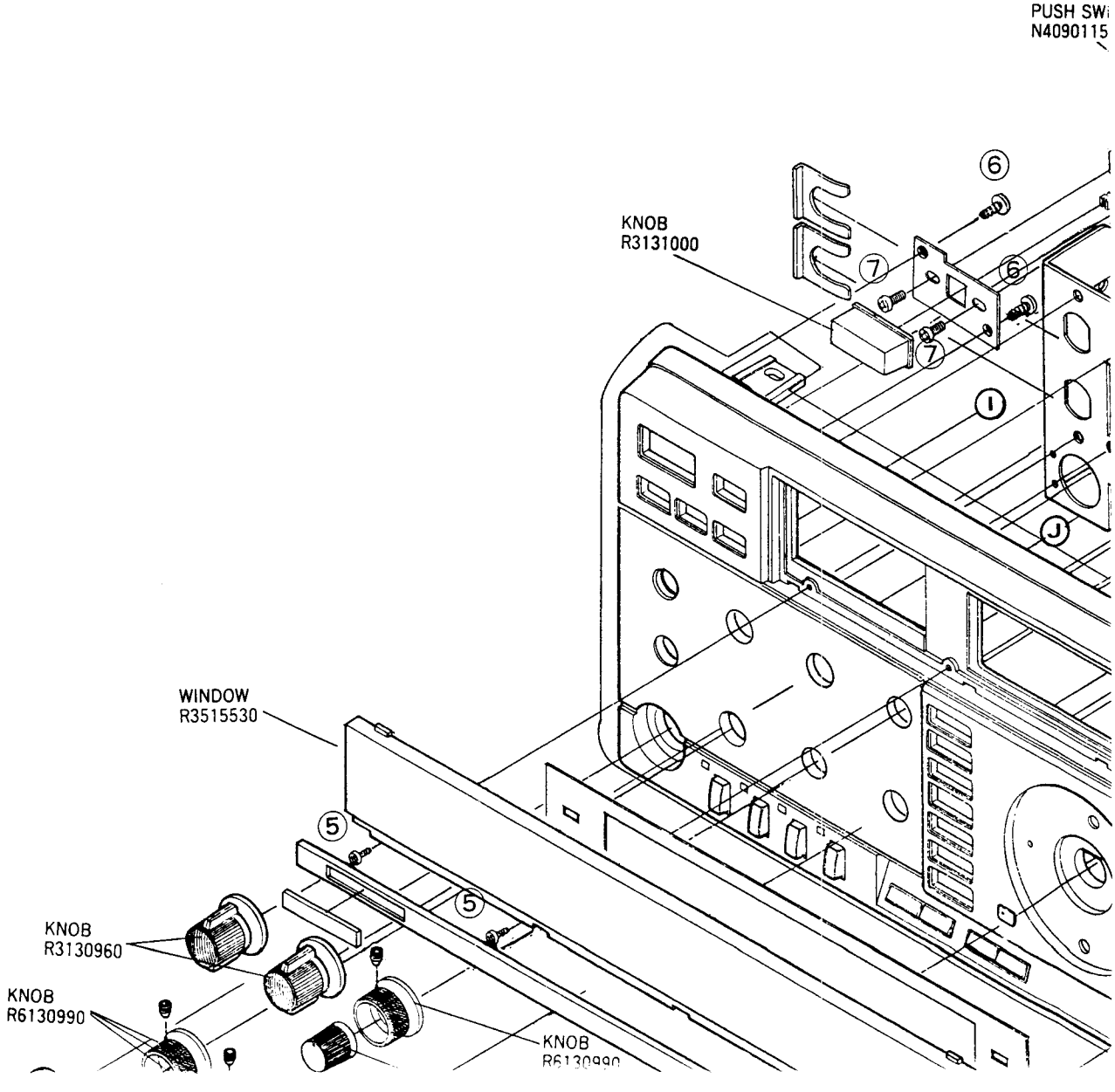

ıel Assembly)

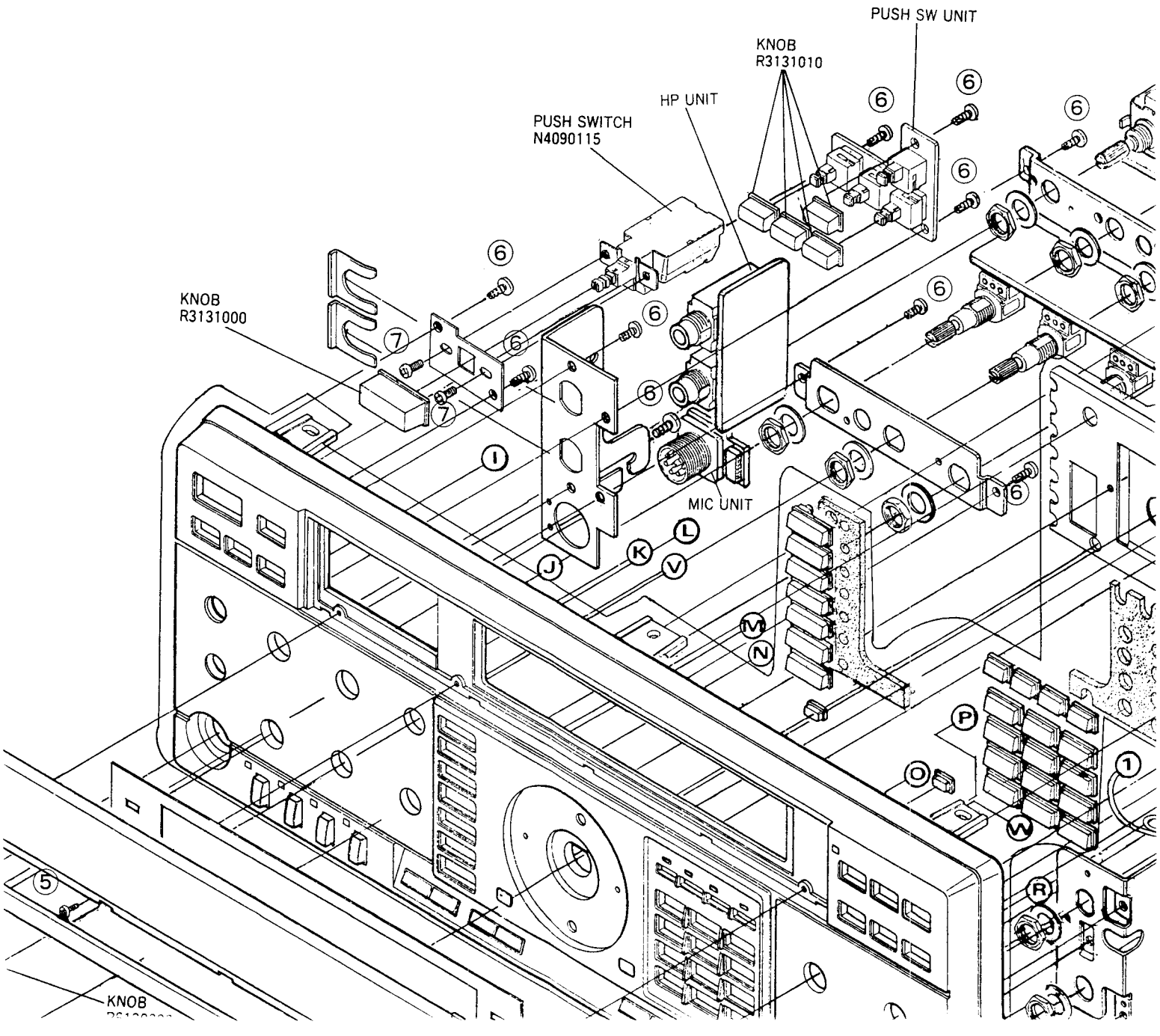

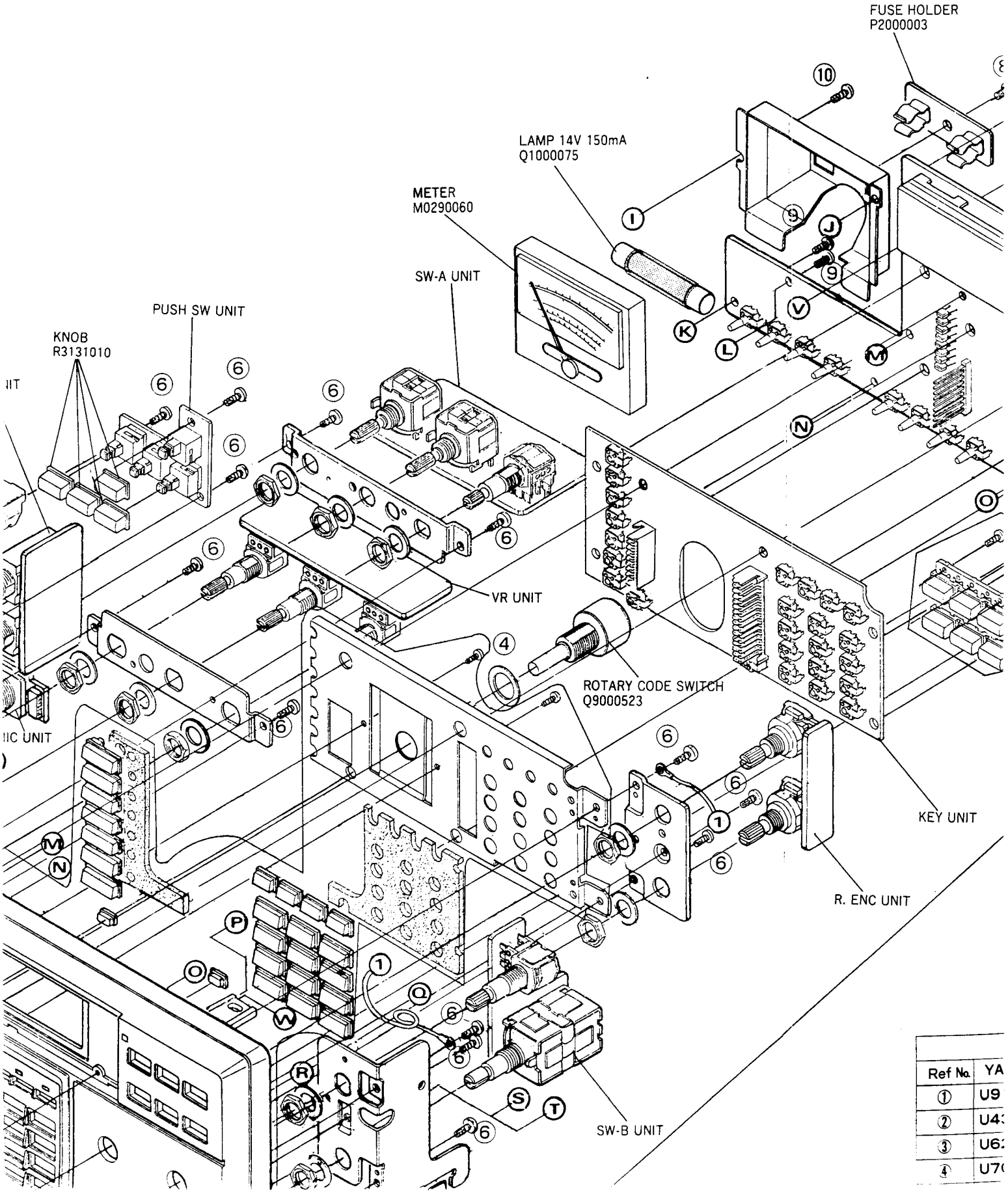

Ref No.	YA
①	U9
②	U4
③	U6
④	U7

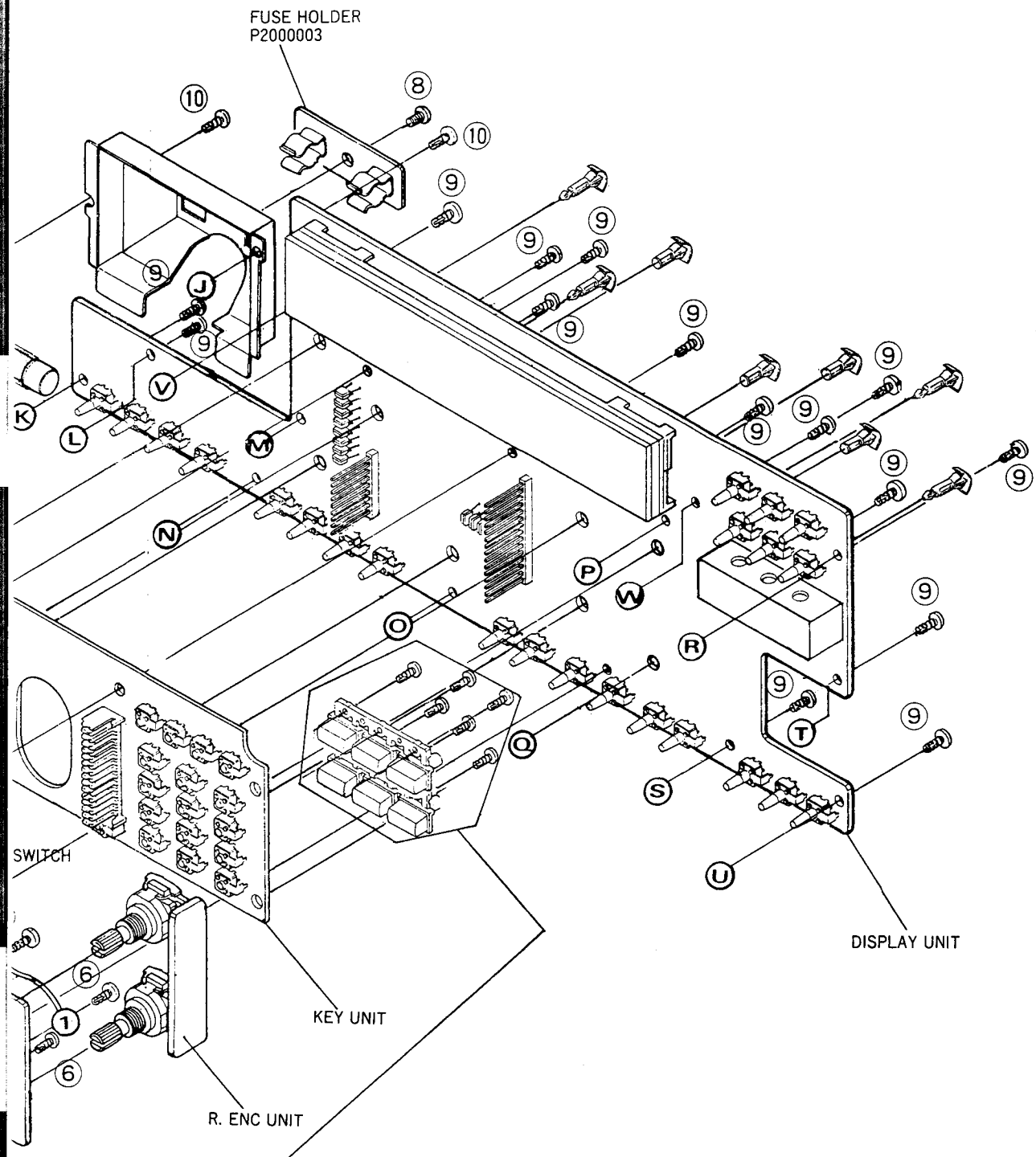

SCREW LIST			
Ref No.	YAESU P/N	Description	Qty.
①	U91406020	HEX SOCKET SET SCREW M4×0.7×6	1
②	U43310001	TAPTITE SCREW M3×10	3
③	U62012001	VOLUME NUT M12×14×2	1
④	U70012001	PLAIN WASHER FW12	2
	U43106001	TAPTITE SCREW M2×6	3

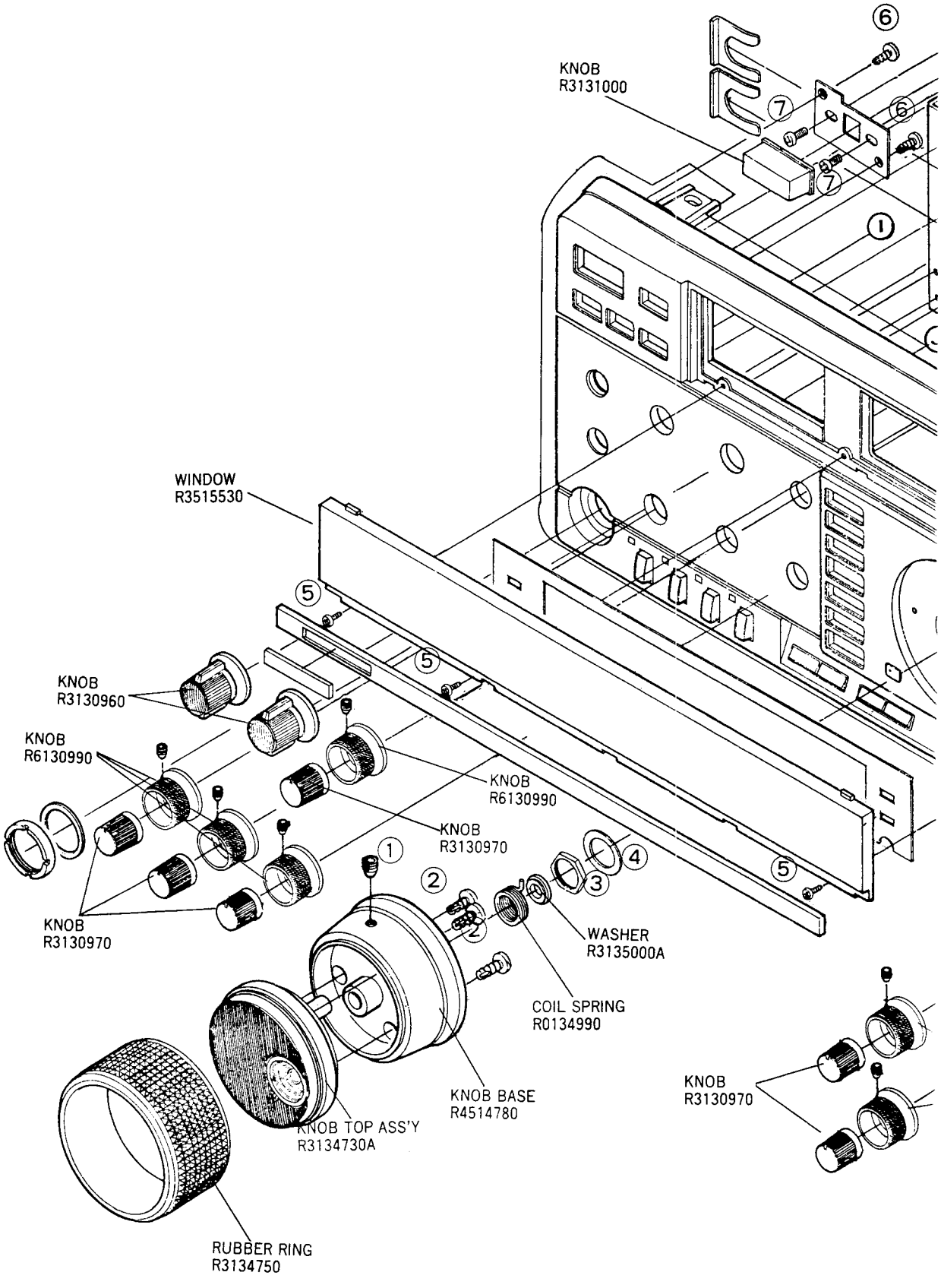
KNOB
R3131000
WINDOW
R3515530
KNOB
R3130960
KNOB
R6130990
KNOB
R6130990
KNOB
R3130970
KNOB
R3130970
WASHER
R3135000A
COIL SPRING
R0134990
KNOB BASE
R4514780
KNOB TOP ASS'Y
R3134730A
RUBBER RING
R3134750
KNOB
R3130970

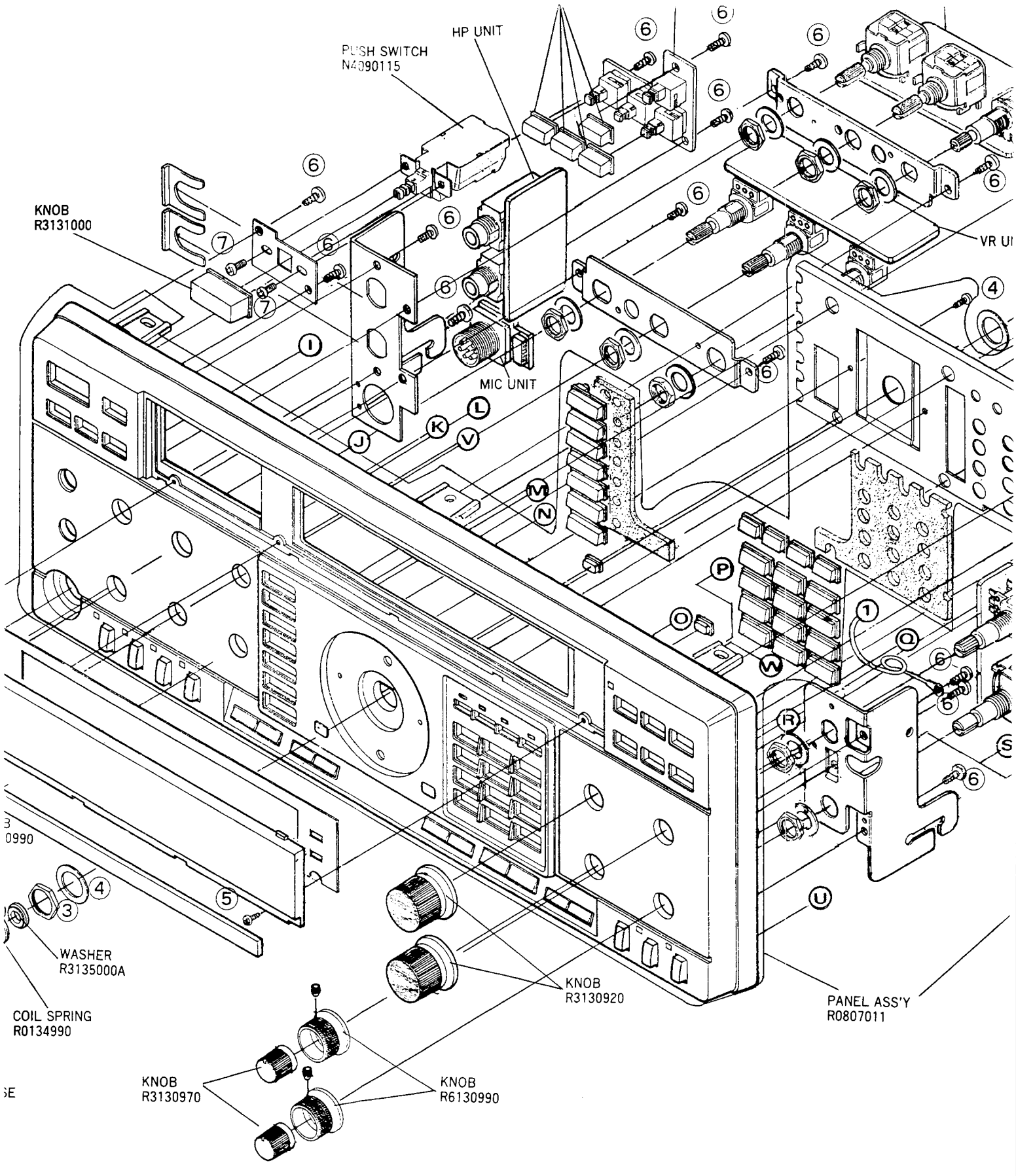
HP UNIT
PUSH SWITCH
N4090115
KNOB
R3131000
MIC UNIT
VR U
WASHER
R3135000A
COIL SPRING
R0134990
KNOB
R3130920
PANEL ASS'Y
R0807011
KNOB
R3130970
KNOB
R6130990

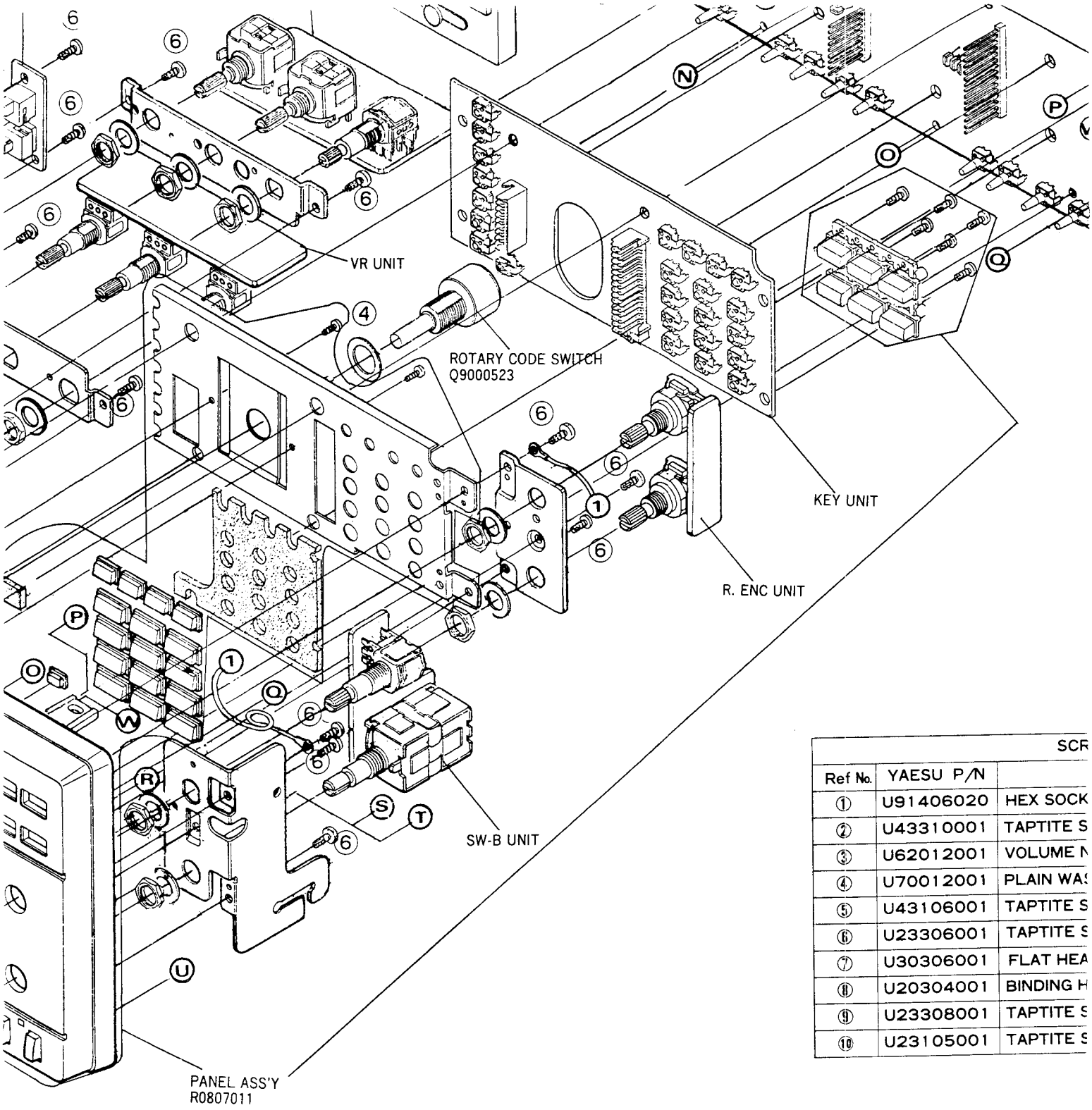

		SCR
Ref No.	YAESU P/N	
①	U91406020	HEX SOCK
②	U43310001	TAPTITE S
③	U62012001	VOLUME N
④	U70012001	PLAIN WA
⑤	U43106001	TAPTITE S
⑥	U23306001	TAPTITE S
⑦	U30306001	FLAT HEA
⑧	U20304001	BINDING H
⑨	U23308001	TAPTITE S
⑩	U23105001	TAPTITE S

Note : Only numbered items can be supplied.

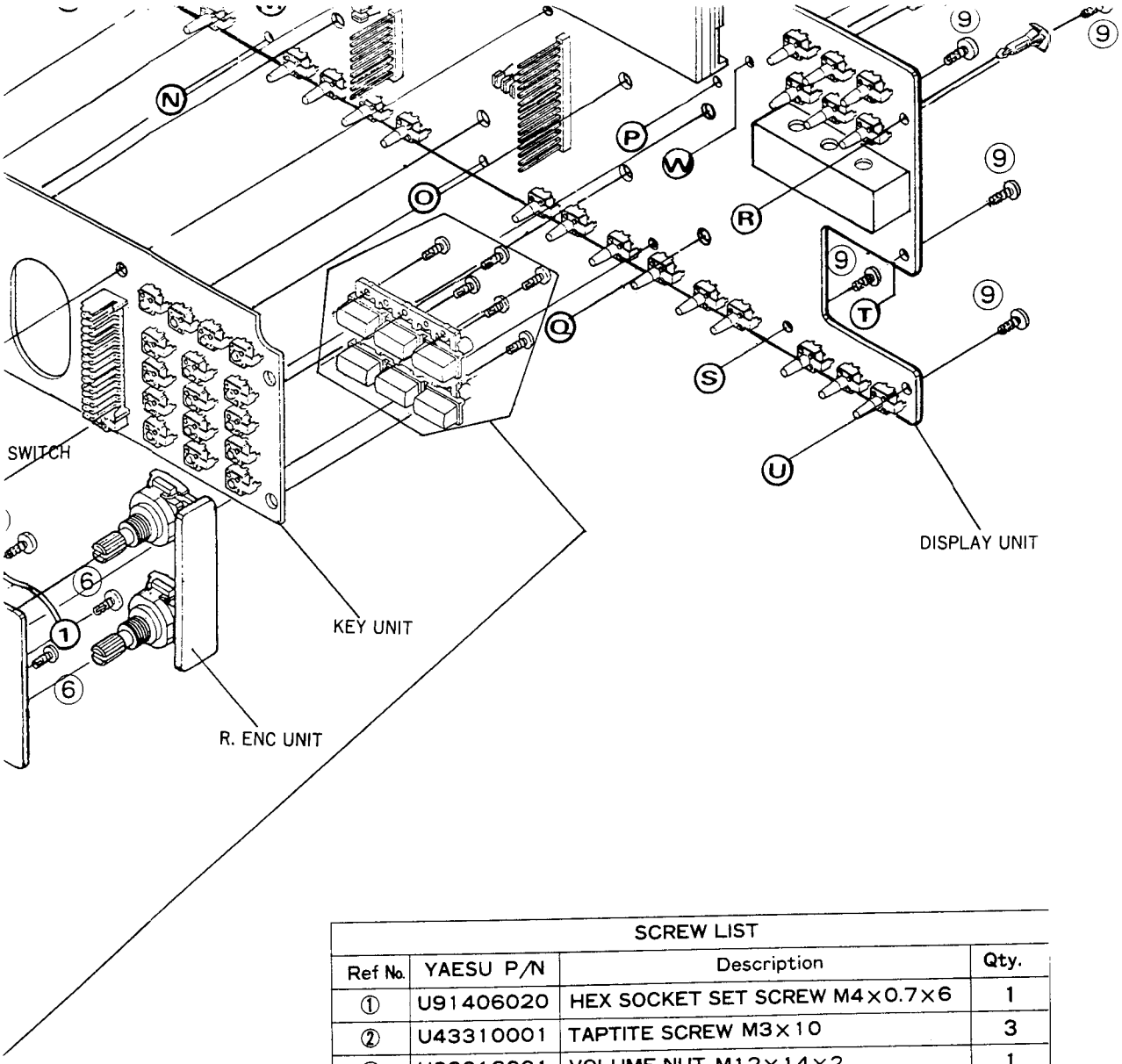

SCREW LIST			
Ref No.	YAESU P/N	Description	Qty.
①	U91406020	HEX SOCKET SET SCREW M4×0.7×6	1
②	U43310001	TAPTITE SCREW M3×10	3
③	U62012001	VOLUME NUT M12×14×2	1
④	U70012001	PLAIN WASHER FW12	2
⑤	U43106001	TAPTITE SCREW M2×6	3
⑥	U23306001	TAPTITE SCREW M3×6	17
⑦	U30306001	FLAT HEAD SCREW M3×6	2
⑧	U20304001	BINDING HEAD SCREW M3×4	1
⑨	U23308001	TAPTITE SCREW M3×8	15
⑩	U23105001	TAPTITE SCREW M2×5	2

y numbered items can be supplied.

Exploded View (Chassis Assembly)

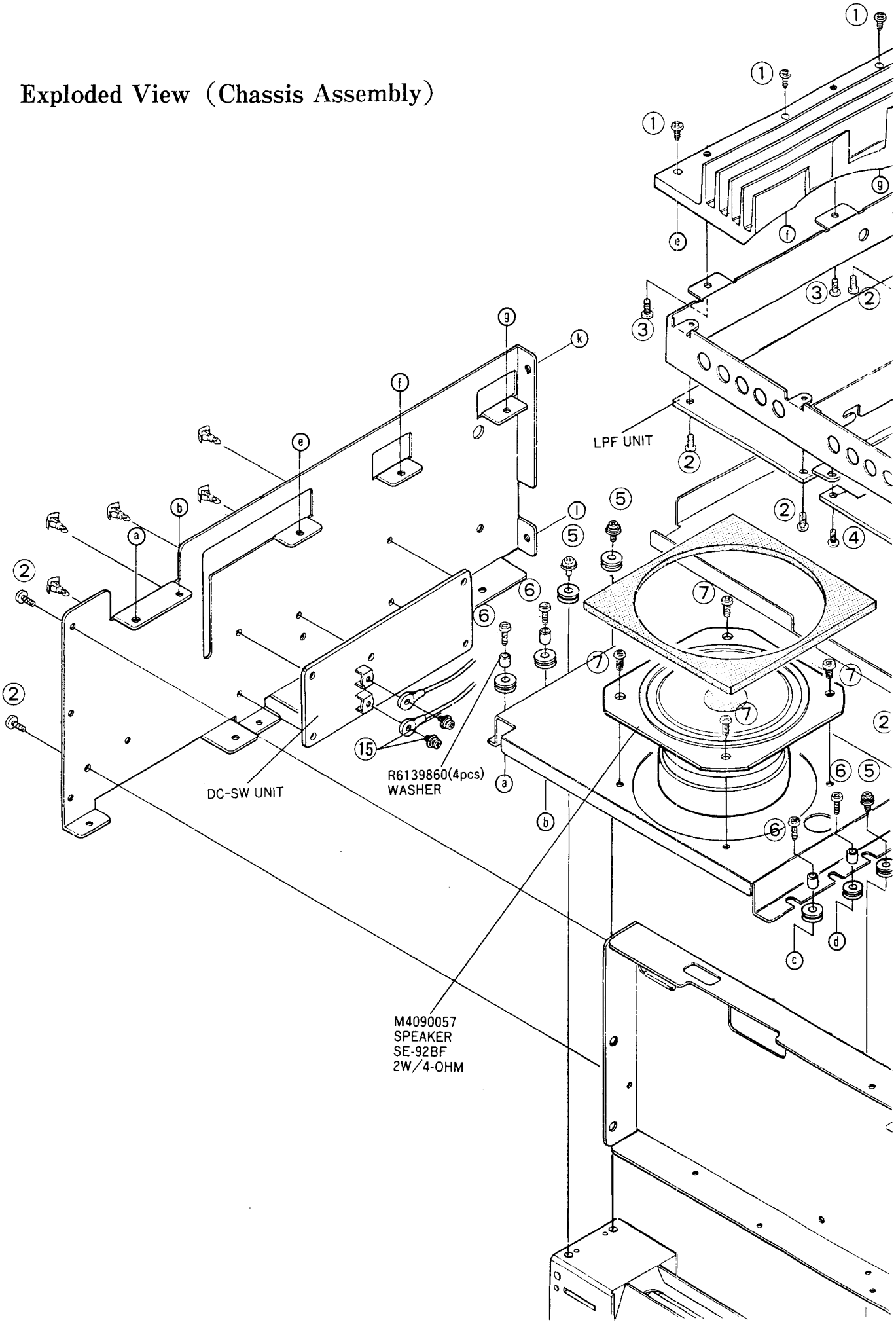

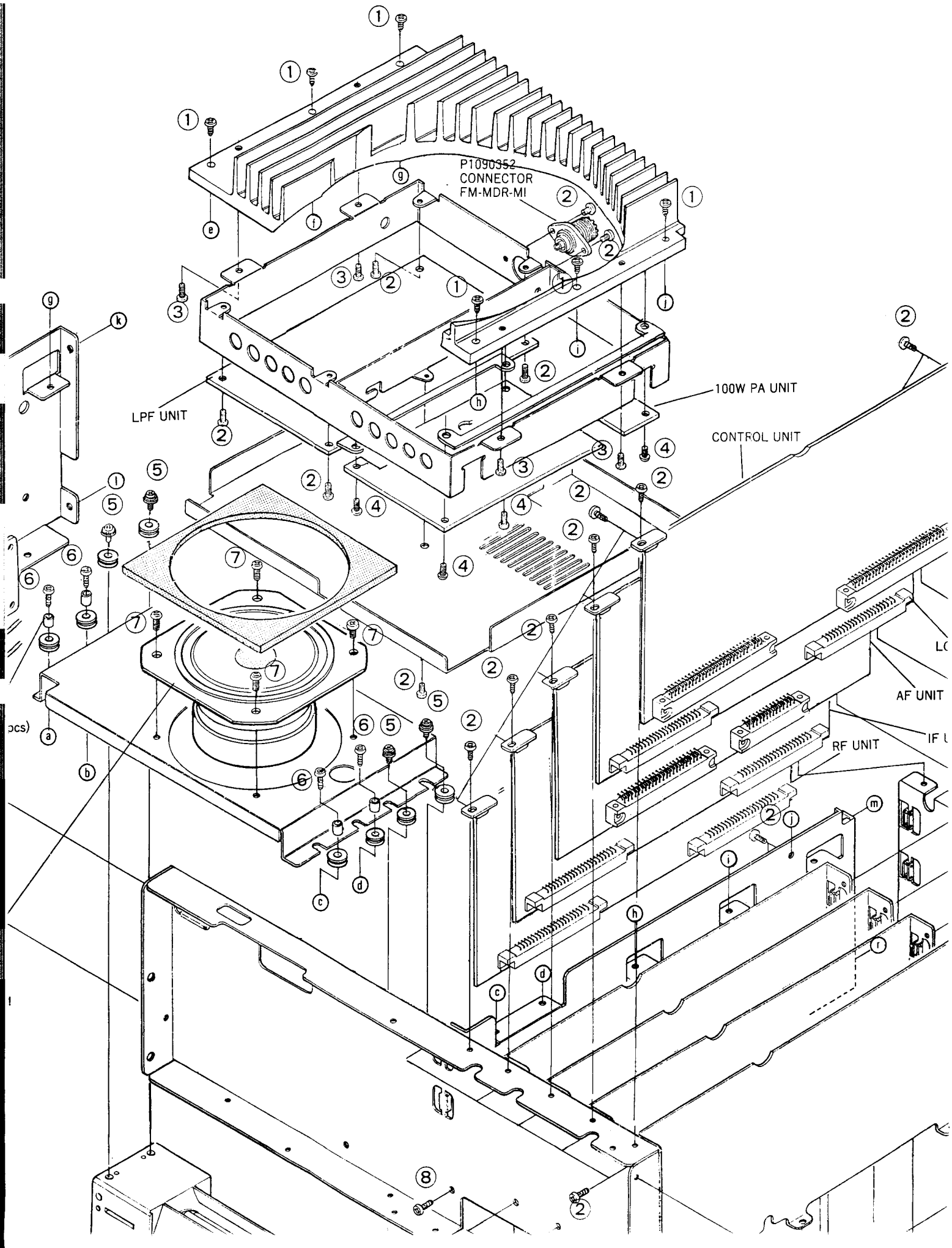
P1090352
CONNECTOR
FM-MDR-MI
LPF UNIT
100W PA UNIT
CONTROL UNIT
AF UNIT
RF UNIT

	*1	
117V 2W	8A Q0000039	10 QO
117V 3W (UL)	8A Q0000039	10 QO
220V 2W	4A Q0000006	5A QO
220V 3W (EU)	4A Q0000006	5A QO
234V 3W (EU)	4A Q0000006	5A QO
234V 3WP	4A Q0000006	5A QO

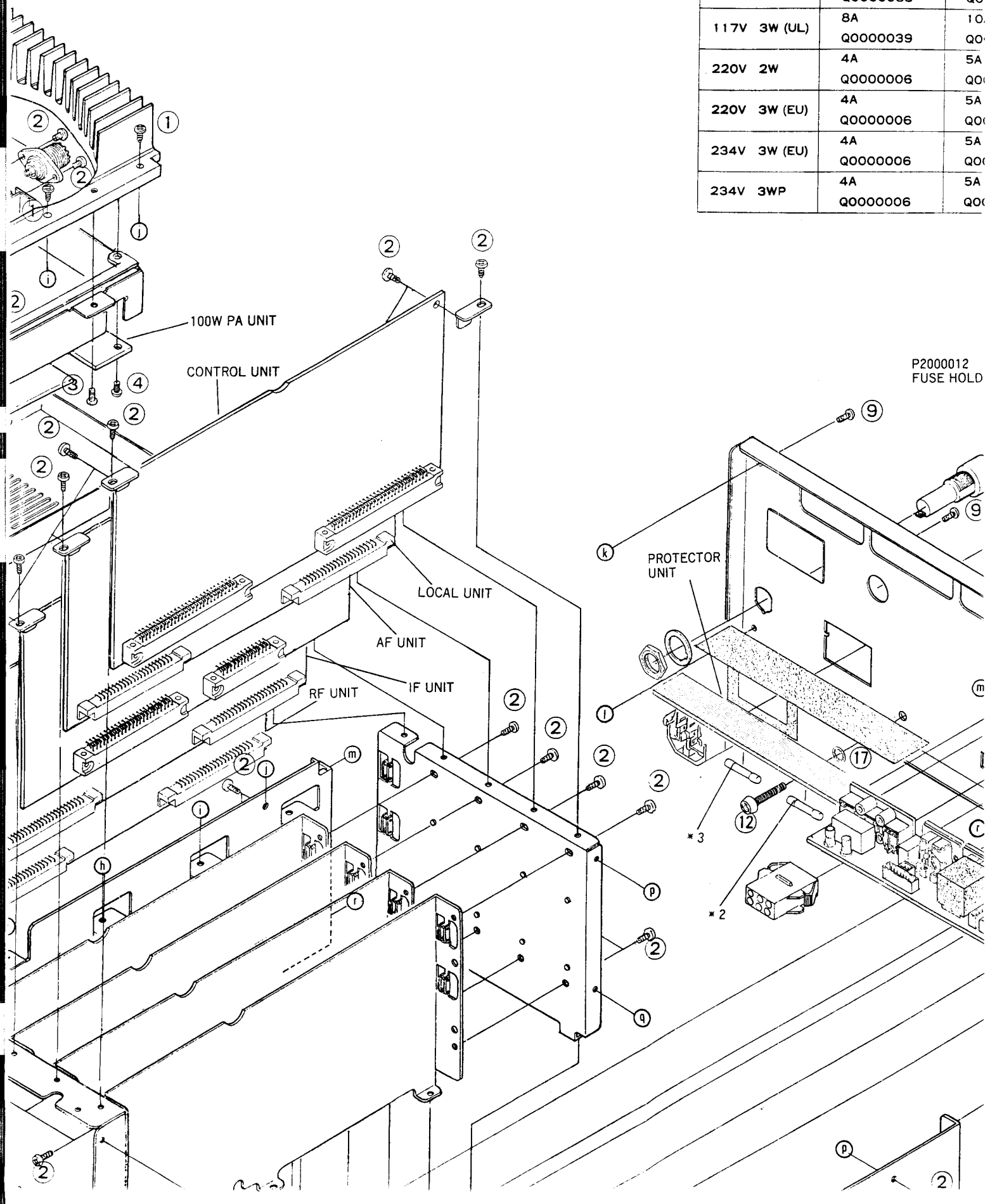

	＊1	＊2, 3	VOL.
117V 2W	8A Q0000039	10A MF-51 Q0000041	21
117V 3W (UL)	8A Q0000039	10A MF-51 Q0000041	22
220V 2W	4A Q0000006	5A MF-51 Q0000027	41
220V 3W (EU)	4A Q0000006	5A MF-51 Q0000027	43
234V 3W (EU)	4A Q0000006	5A MF-51 Q0000027	53
234V 3WP	4A Q0000006	5A MF-51 Q0000027	54

SCREW LIST			
Ref No.	YAESU P/N	Description	Qty.
①	U24310001	TAPTITE SCREW M3×10	6
②	U24305001	TAPTITE SCREW M3×5	65
③	U30308001	BINDING HEAD SCREW M3×6	4
④	U20308001	BINDING HEAD SCREW M3×8	4
⑤	U04206001	SEMS SCREW HSM2.6×6	4
⑥	U24308001	TAPTITE SCREW M3×8	4
⑦	U20306001	FLAT HEAD SCREW M3×8	4
⑧	U40304201	TAPPING SCREW 3×4	1
⑨	U24305007	TAPTITE SCREW M3×5B	6
⑩	U23308007	TAPTITE SCREW M3×8B	2
⑪	U00308007	PAN HEAD SCREW M3×8B	7
⑫	U00520002	PAN HEAD SCREW M5×20NI	1
⑬	U70012001	PLAIN WASHER FW12	1
⑭	U62012001	VOLUME NUT 12×14×2	1
⑮	U03306001	SEMS SCREW ASM3×6	2
⑯	U65500102	WING NUT N5NI	1
⑰	U73005002	TOOTHED LOCK WASHER IW5NI	2
⑱	U70005002	PLAIN WASHER FW5NI	2
⑲	U66500002	FLANGE NUT N5NI	1

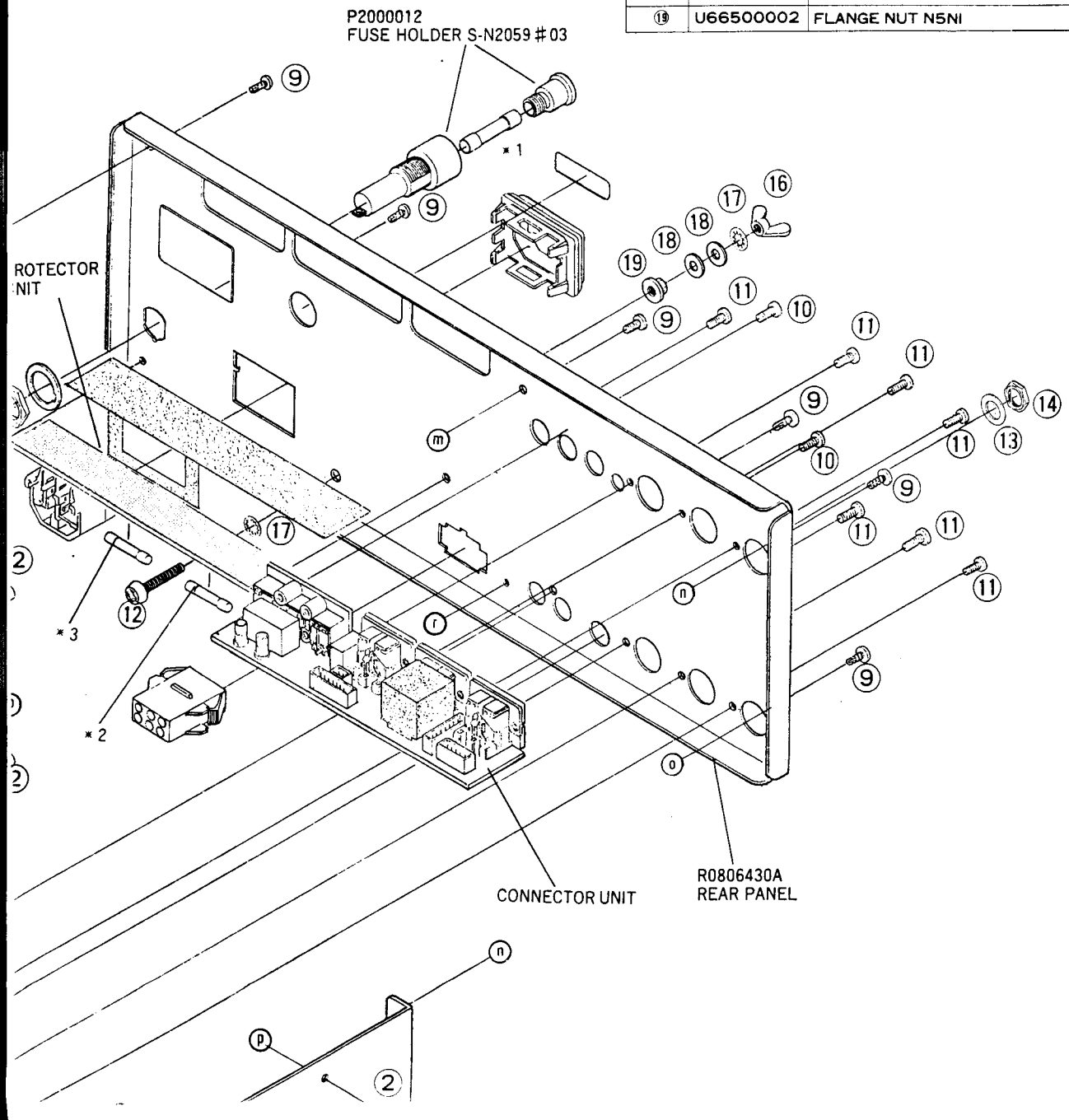

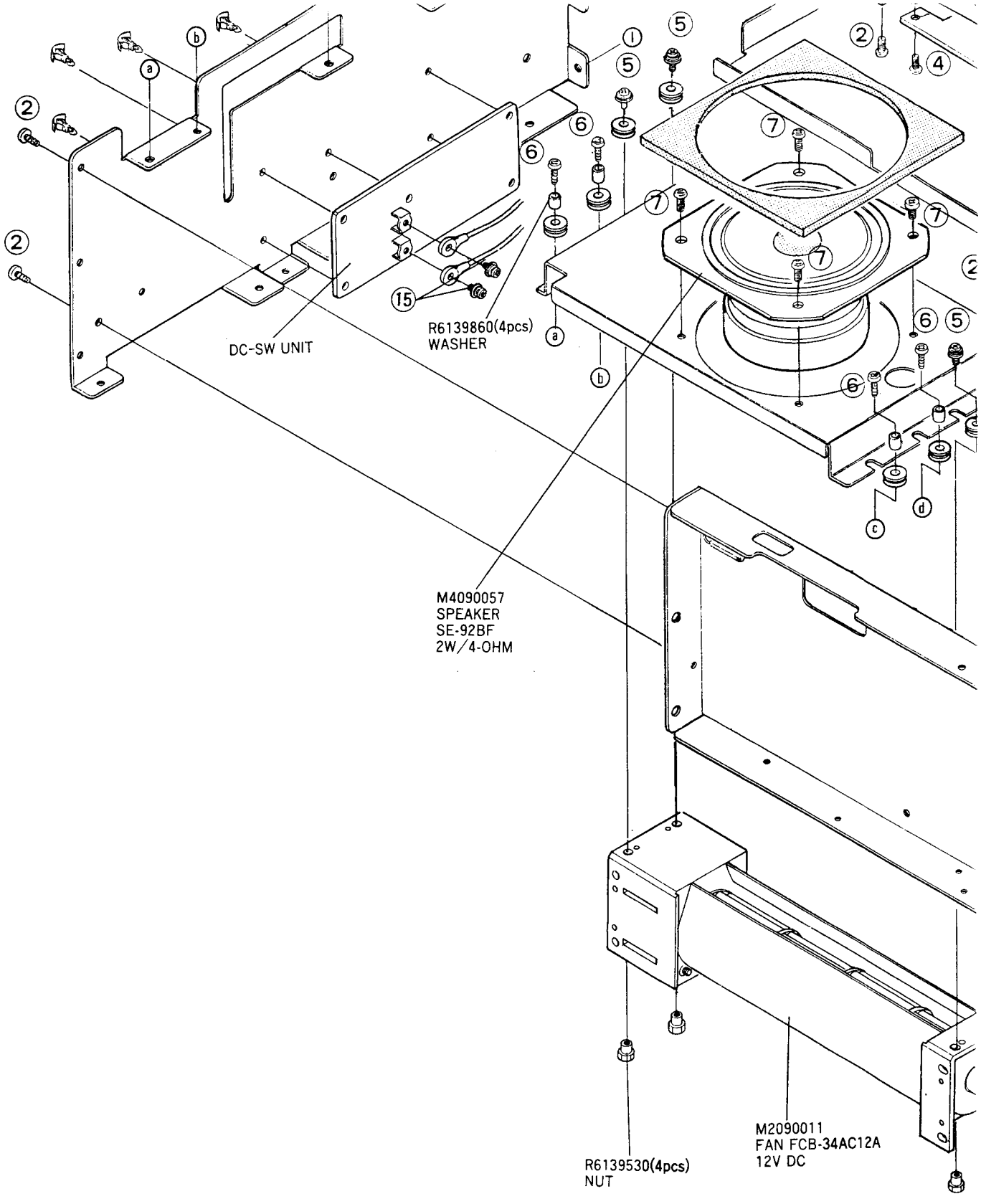
DC-SW UNIT
R6139860(4pcs)
WASHER
M4090057
SPEAKER
SE-92BF
2W/4-OHM
R6139530(4pcs)
NUT
M2090011
FAN FCB-34AC12A
12V DC

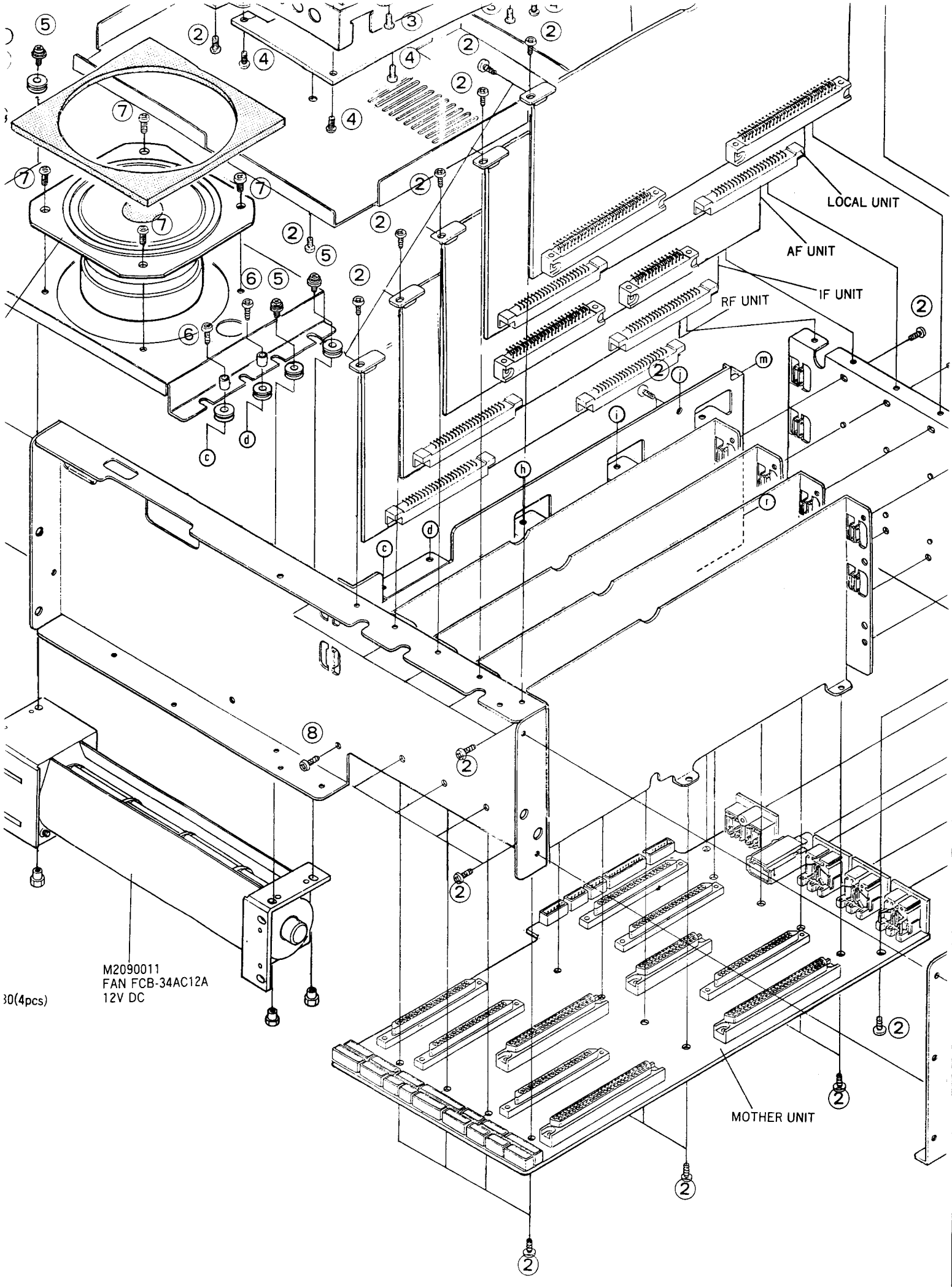
LOCAL UNIT
AF UNIT
IF UNIT
RF UNIT
MOTHER UNIT
M2090011
FAN FCB-34AC12A
12V DC
30(4pcs)

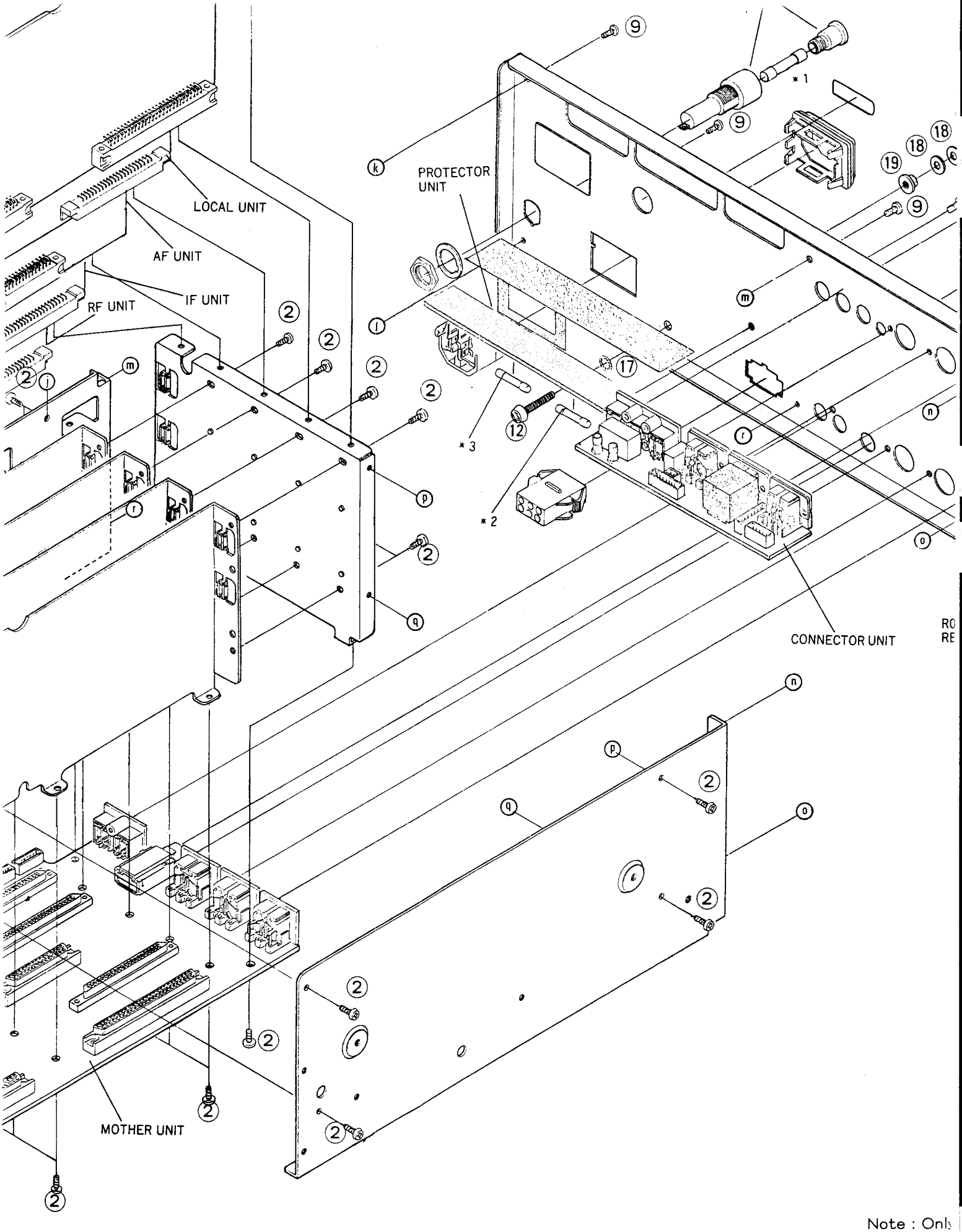
LOCAL UNIT
AF UNIT
IF UNIT
RF UNIT
PROTECTOR UNIT
CONNECTOR UNIT
MOTHER UNIT
*1
*2
*3

Note : Only

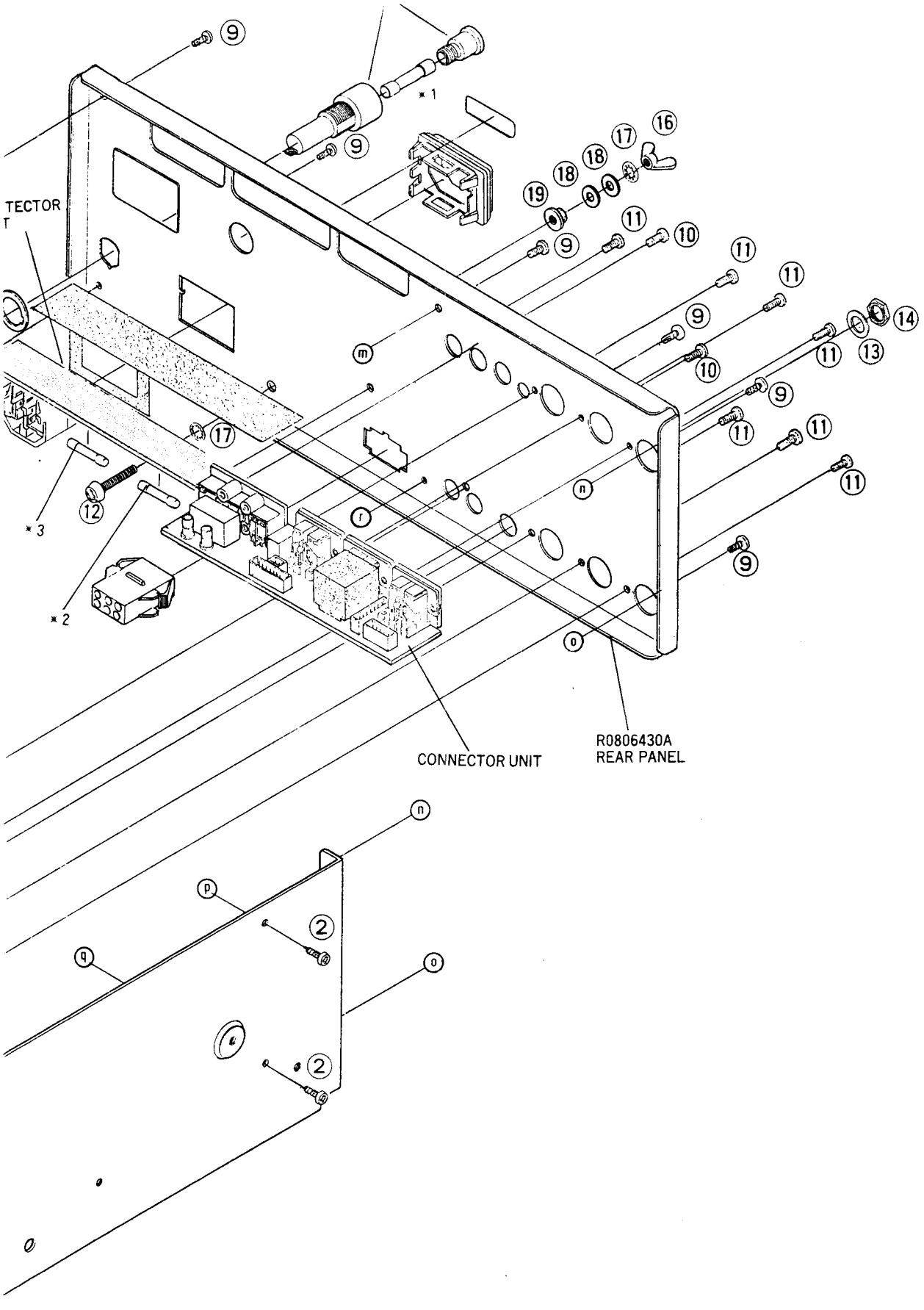

Note : Only numbered items can be supplied.