FT-817
Circuit Diagram

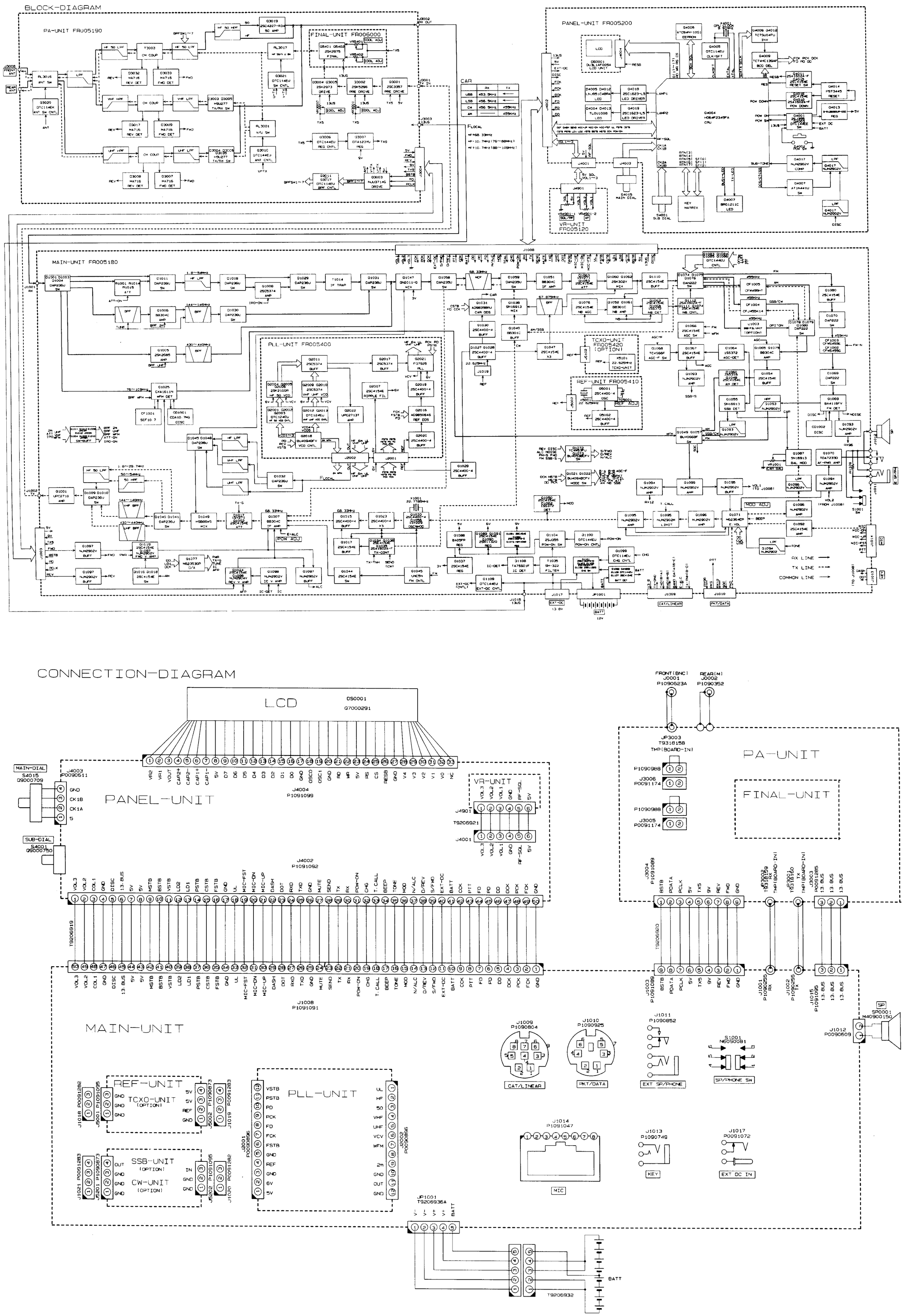

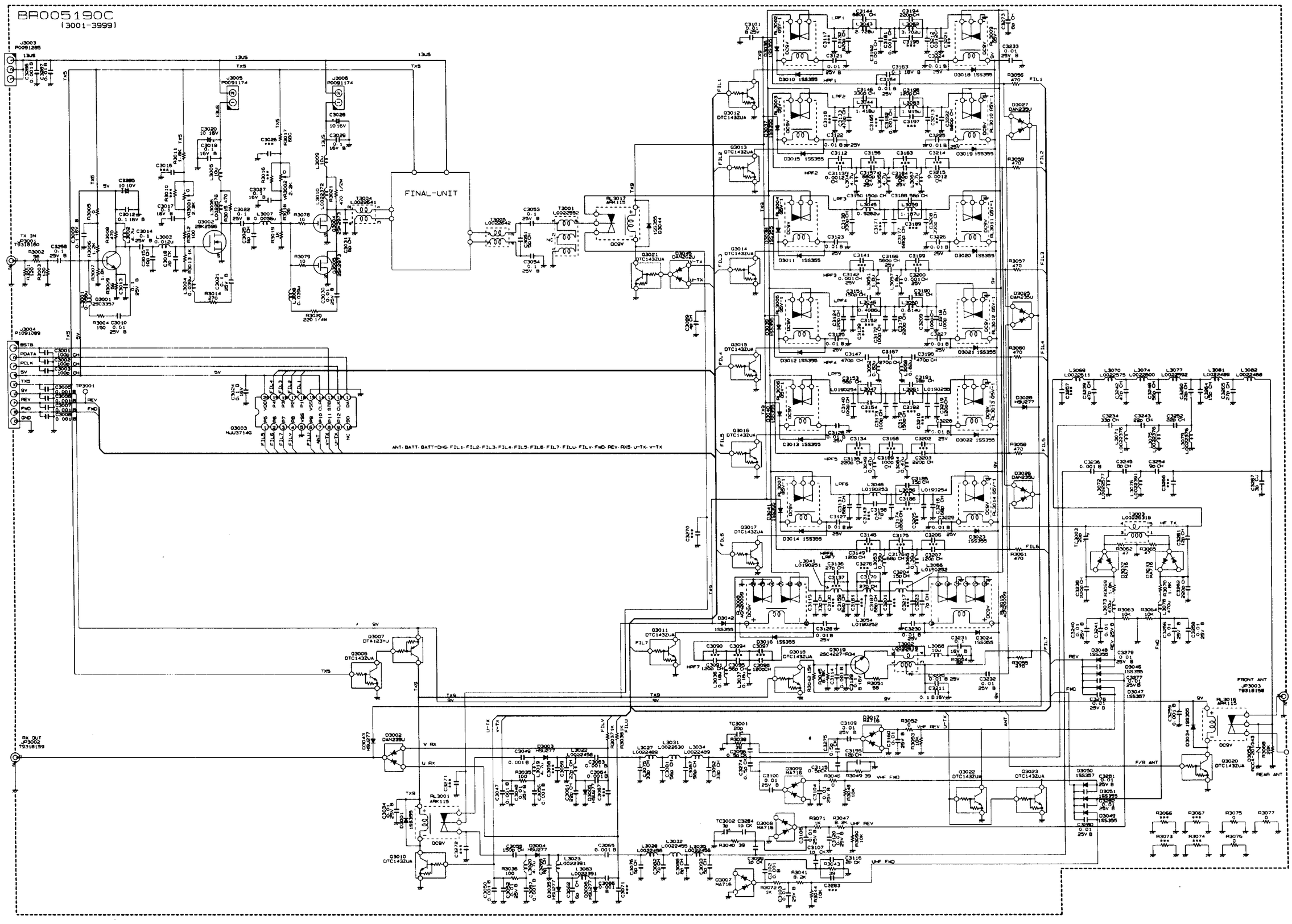
BR005190C
(3001-3999)
FINAL-UNIT
ANT: BATT: BATT-CHG: FIL1: FIL2: FIL3: FIL4: FIL5: FIL6: FIL7: FILU: FILV: FWD: REV: RX5: U-TX: V-TX
TX IN
RX OUT
FRONT ANT
REAR ANT
F/R ANT
VHF REV
VHF FWD
UHF REV
UHF FWD

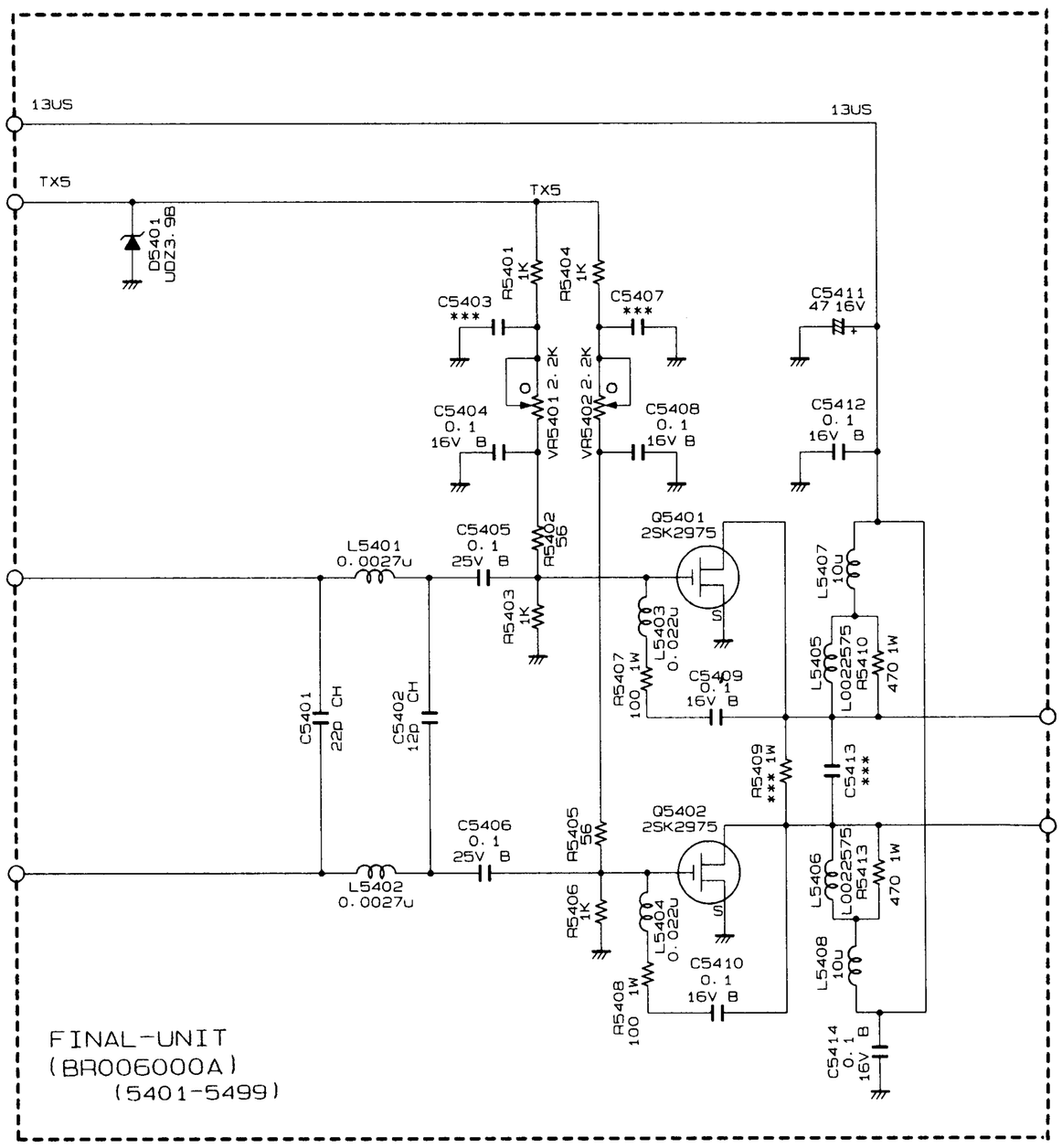
13US
TX5
D5401
UDZ3.9B
R5401 1K
R5404 1K
C5403 ***
C5407 ***
C5411 47 16V
VR5401 2.2K
VR5402 2.2K
C5404 0.1 16V B
C5408 0.1 16V B
C5412 0.1 16V B
L5401 0.0027u
C5405 0.1 25V B
R5402 56
Q5401 2SK2975
L5407 10u
R5403 1K
L5403 0.022u
R5407 100 1W
C5409 0.1 16V B
L5405 L0022575
R5410 470 1W
C5401 22p CH
C5402 12p CH
R5409 *** 1W
C5413 ***
C5406 0.1 25V B
R5405 56
Q5402 2SK2975
L5402 0.0027u
R5406 1K
L5404 0.022u
L5406 L0022575
R5413 470 1W
C5410 0.1 16V B
R5408 100 1W
L5408 10u
C5414 0.1 16V B
FINAL-UNIT
(BR006000A)
(5401-5499)

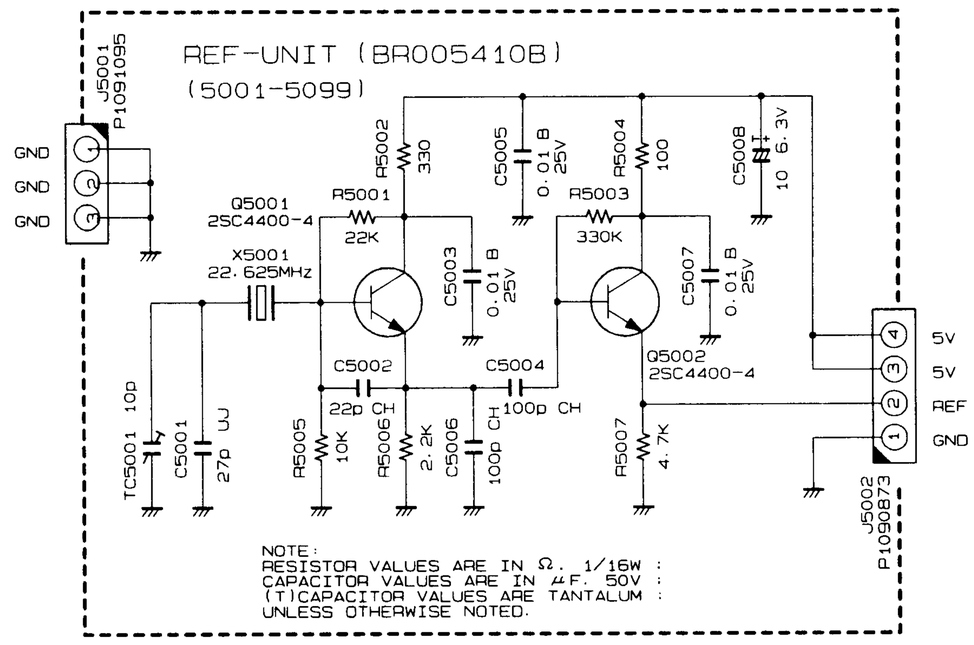
REF-UNIT (BR005410B)
(5001-5099)
J5001 P1091095
GND
GND
GND
R5002 330
C5005 0.01 B 25V
R5004 100
C5008 10 6.3V
Q5001 2SC4400-4
R5001 22K
R5003 330K
X5001 22.625MHz
C5003 0.01 B 25V
C5007 0.01 B 25V
Q5002 2SC4400-4
C5002 22p CH
C5004 100p CH
TC5001 10p
C5001 27p UJ
R5005 10K
R5006 2.2K
C5006 100p CH
R5007 4.7K
5V
5V
REF
GND
J5002 P1090873
NOTE:
RESISTOR VALUES ARE IN Ω. 1/16W :
CAPACITOR VALUES ARE IN μF. 50V :
(T)CAPACITOR VALUES ARE TANTALUM :
UNLESS OTHERWISE NOTED.

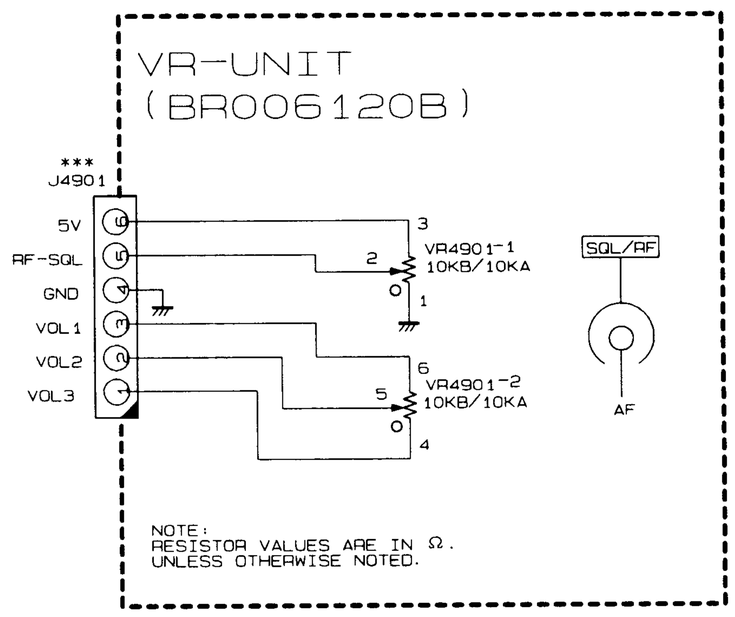
VR-UNIT
(BR006120B)
*** J4901
5V
RF-SQL
GND
VOL1
VOL2
VOL3
VR4901-1 10KB/10KA
VR4901-2 10KB/10KA
SQL/RF
AF
NOTE:
RESISTOR VALUES ARE IN Ω.
UNLESS OTHERWISE NOTED.

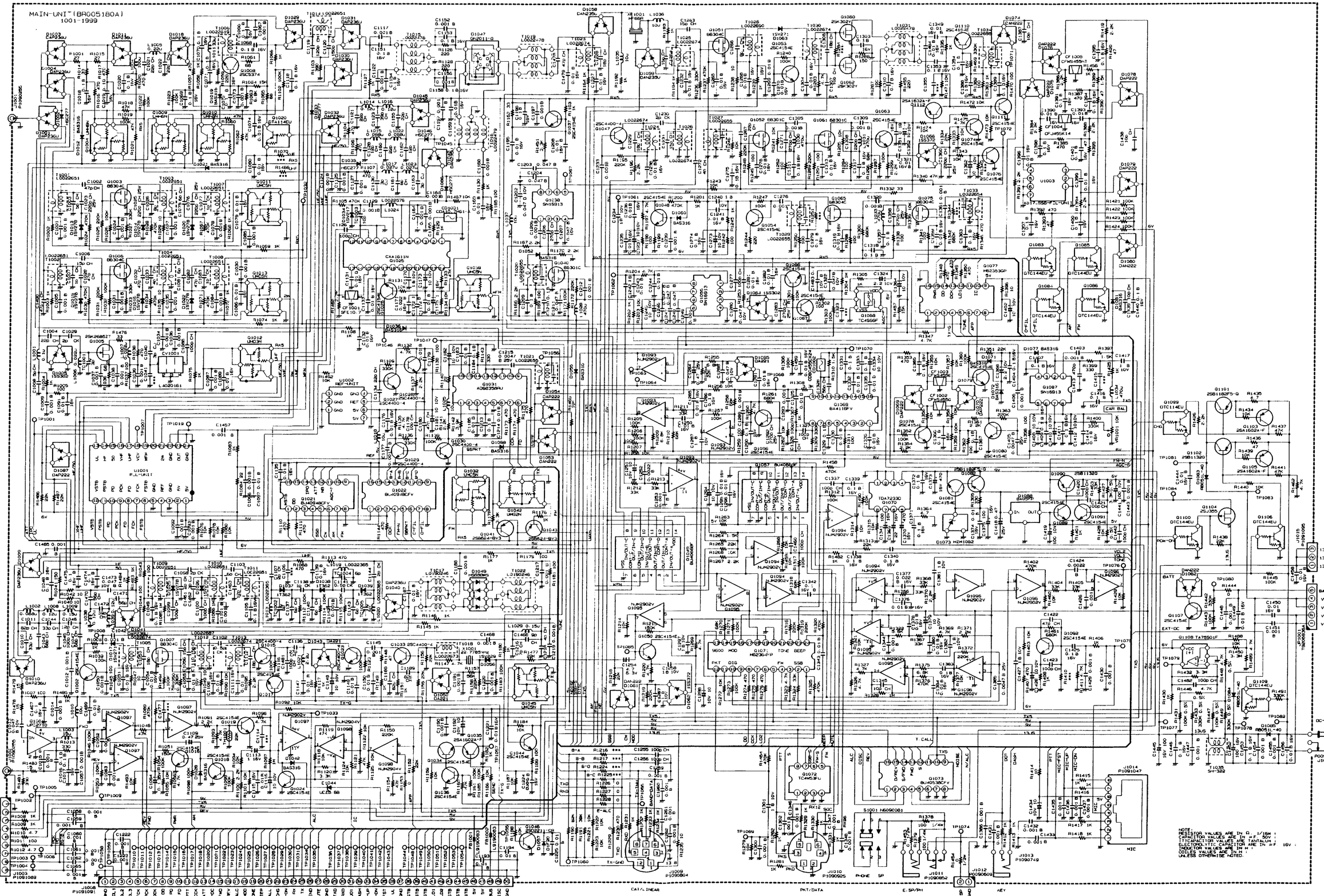
MAIN-UNIT (BR005180A)
1001-1999
CAT/LINEAR
PKT/DATA
E.SP/PH
KEY
MIC
NOTE
RESISTOR VALUES ARE IN Ω, 1/16W
CAPACITOR VALUES ARE IN μF, 50V
(TT)CAPACITOR VALUES ARE TANTALUM
ELECTROLYTIC CAPACITOR ARE IN μF, 16V
INDUCTOR VALUES ARE IN H
COILS VALUES ARE IN H
UNLESS OTHERWISE NOTED.

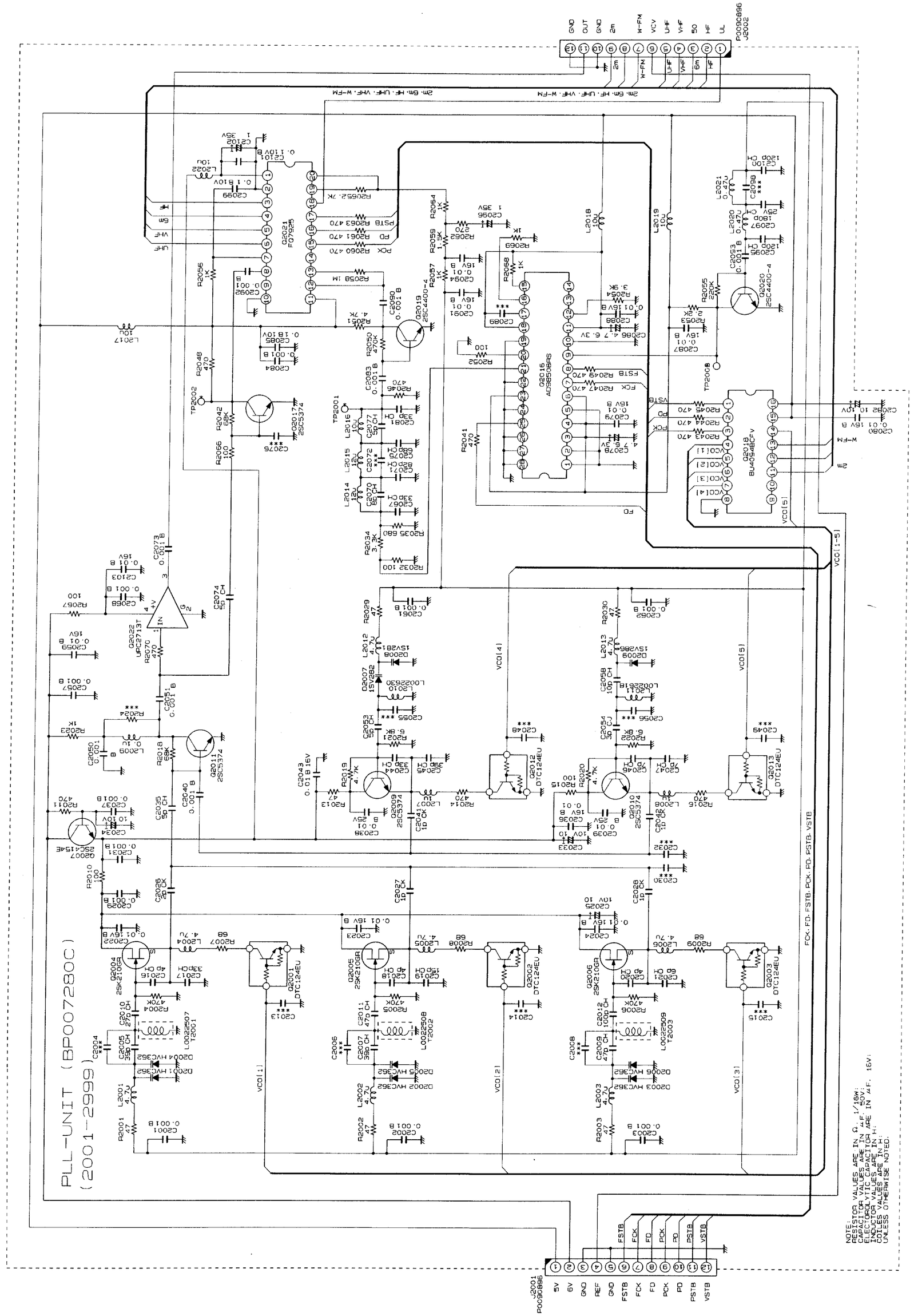
PLL-UNIT (BP007280C)
(2001-2999)
NOTE:
RESISTOR VALUES ARE IN Ω 1/16W;
CAPACITOR VALUES ARE IN μF 16V;
ELECTROLYTIC CAPACITOR ARE IN μF 16V;
INDUCTOR VALUES ARE IN μH;
UNLESS OTHERWISE NOTED.

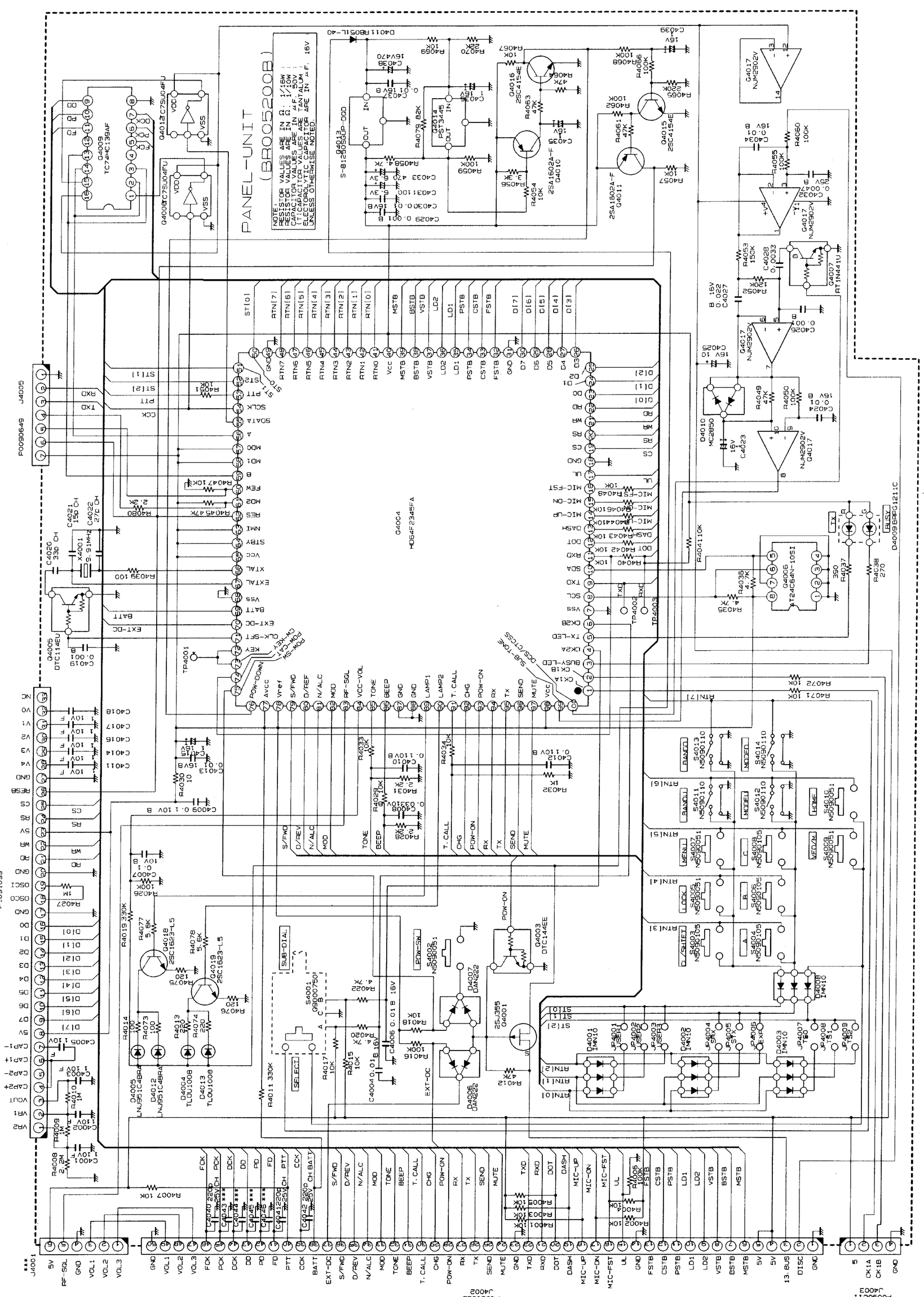
PANEL-UNIT
(BR005200B)
NOTES: UNLESS OTHERWISE NOTED
TO LCD
TO MAIN-UNIT