FT-2700RH TECHNICAL SUPPLEMENT

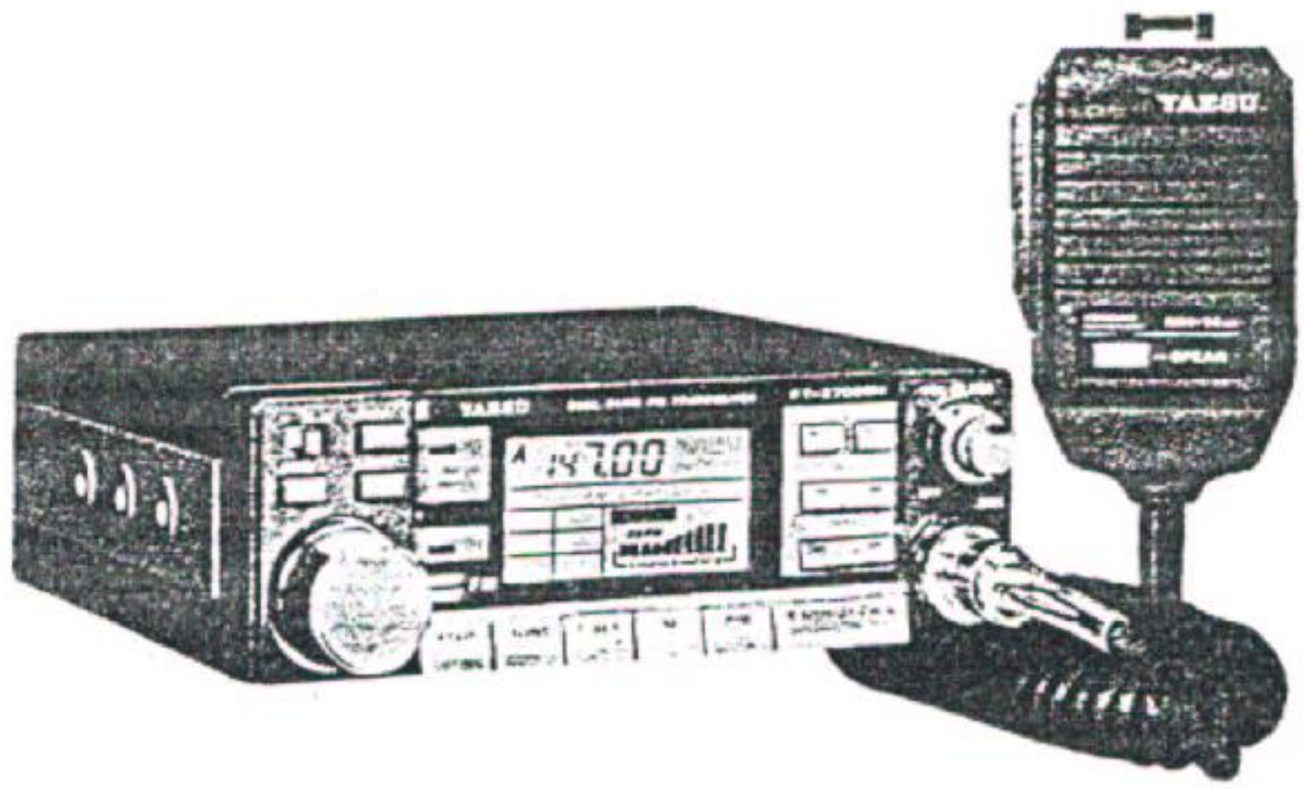

This manual is intended to serve as a supplement to the FT-2700RH Operating Manual. Detailed information regarding functions, specifications, options and operation has been provided in the Operating Manual, and is not reprinted herein. Therefore, this supplement is not intended to serve as an independent reference, but to be used in conjunction with the information provided in the Operating Manual.

Because of the compactness and complexity of the double-sided glass-epoxy circuit boards used in the FT-2700RH, four layout diagrams are provided for each board. Each side of the board is identified by the type of the majority of components installed on that side. In most cases one side has only chip components, and the other has either a mixture of both chip and lead components (trimmers, coils, electrolytic capacitors, packaged ICs, etc.), or lead components only. The two "obverse" views depict the board as it is seen when viewed directly with the eye, while the two "reverse" views depict the unseen side of the board as it would appear if one were to peer through the board from the other side without seeing the components and tracks on the near side.

While we believe the technical information in this manual is correct, Yaesu assumes no liability for damage that may occur as a result of typographical or other errors that may be present. Your cooperation in pointing out any inconsistencies in the technical information would be appreciated.

Yaesu Musen reserves the right to make changes in the circuitry of this transceiver, in the interest of technological improvement, without notification of the owners.

CHIP COMPONENT INFORMATION

While chip components are generally more reliable and enduring than lead components, they are much more difficult to replace. The chip placement robots at the factory set the components into place on a small spot of resin adhesive before soldering, and this adhesive provides rigid mechanical support for the component indepently of the solder joints. Once the resin has been cured there is no way to remove it. Therefore, to remove a chip component, it is necessary to first remove all of the solder at each connection and then forcefully break the adhesive bond. This must be done very carefully, both to avoid overheating the board and lifting tracks when desoldering, and to avoid damaging the board or underlying tracks when breaking off the component. Removed components should never be reused, as they are bound to be unreliable after removal.

In spite of the following information on labelling, some chip components may have no markings at all (especially resistors and capacitors, indicated with asterisks "*" below). In this case, to identify the component, refer to the part location in the layout diagrams, note the location number, and then refer to the Parts List to determine the value or nomenclature and type.

Bipolar Transistors

Part(Location)No.	Nomenclature	Marking
Q1022, 1023, 1024, 1025, 1026, 1027, 2020, 2023, 4005, 4006	2SA1162GR	SG
Q1002, 1006, 1007, 2006, 3010	2SC2619B	FB
Q3003, 3004, 3005, 3007	2SC2620B	QB
Q1008, 1011, 1012, 1013, 1014, 1015, 1016, 1017, 1018, 1028, 1029, 1030, 1031, 1032, 1033, 1035, 1038, 1039, 1041, 1042, 2007, 2008, 2015, 2017, 2018, 2019, 2022, 2024, 3011, 3012, 4003, 4004, 4007	2SC2712GR/Y	LG/LY
Q3001, 3002	2SC3356	R22

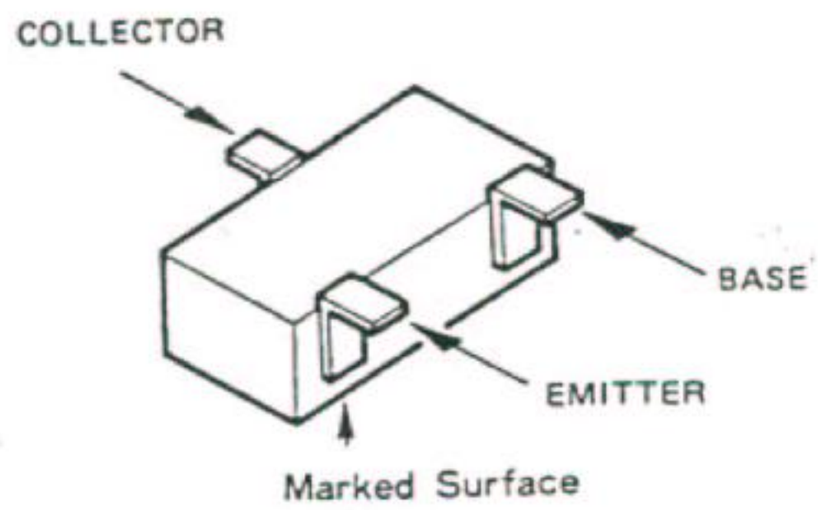

Example : Nomen. Code

S G

h_{FE} Rank

Dual Diodes

Part(Location)No.	Nomenclature	Marking
D4002	1SS184	B3

Example : Nomen. Code (1SS182–1SS184)

B 3

V_R Rating (80V)

B1 = 1SS182 (30V)
B2 = 1SS183 (50V)
B3 = 1SS184 (80V)

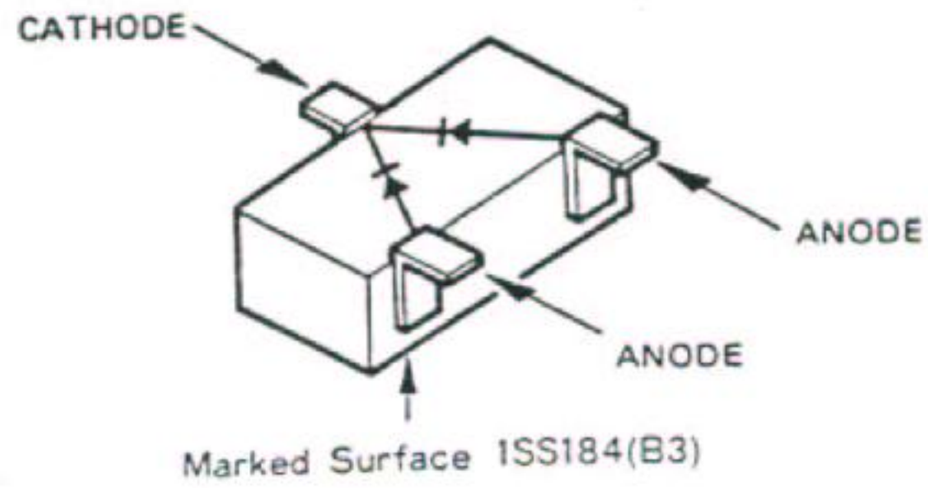

Resistors

Type RMC1/10W

Mark* A1 ..... Z6

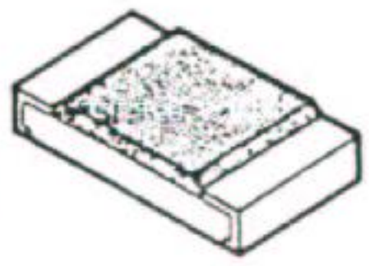

A1

Value code

A	1.0	N	3.3
B	1.1	P	3.6
C	1.2	Q	3.9
D	1.3	R	4.3
E	1.5	S	4.7
F	1.6	T	5.1
G	1.8	U	5.6
H	2.0	V	6.2
J	2.2	W	6.8
K	2.4	X	7.5
L	2.7	Y	8.2
M	3.0	Z	9.1

Multiplier code

0	1
1	10^1
2	10^2
3	10^3
4	10^4
5	10^5
6	10^6

Examples :

A1 = 10Ω

J3 = 2.2kΩ

S4 = 47kΩ

Jumper (0Ω) Chip

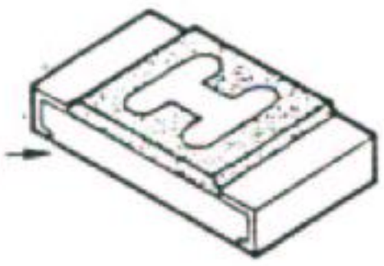

Ceramic Capacitors

Types: C2012
C3216

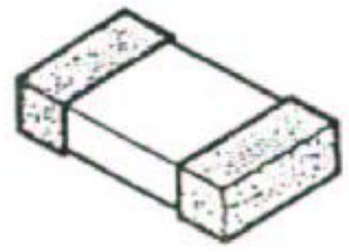

Mark* C3216 C2012

Bar

A5 A5

Value code

A	1.0	M	3.0	Y	8.2
B	1.1	N	3.3	Z	9.1
C	1.2	P	3.6	a	2.5
D	1.3	Q	3.9	b	3.5
E	1.5	R	4.3	d	4.0
F	1.6	S	4.7	e	4.5
G	1.8	T	5.1	f	5.0
H	2.0	U	5.6	m	6.0
J	2.2	V	6.2	n	7.0
K	2.4	W	6.8	t	8.0
L	2.7	X	7.5	y	9.0

Multiplier code

0	1
1	10^1
2	10^2
3	10^3
4	10^4
5	10^5
6	10^6
7	—
8	10^{-2}
9	10^{-1}

C3216 types use a bar marking for either thermal coefficient or tolereance ranking.(according to capacitors value range) as below.

SL ····· No bar

Temperture Compensating Types (low values)

NPO(CH)	N150(PH)	N220(RH)	N330(SH)	N470(TH)	N750(UJ)

Tantalum Capacitor

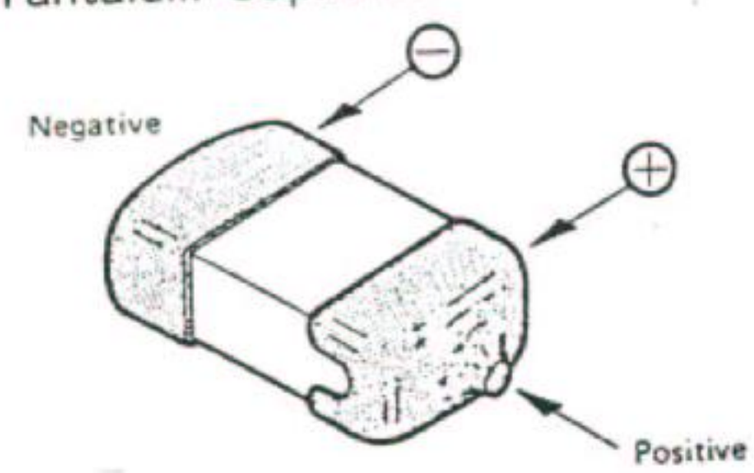

Dielectric Constant (Hi K) types (high value)

B	D

F ····· No bar

Cap. Tolerance

B = 10%

D = 20%

F = +80%/−20%

Examples : A1 10pF NPO

J3 0.0022μF D

A3 0.001μF B

SEMICONDUCTOR CROSS-REFERENCE

PART LOCATION No.	ORIGINAL NOMENCLATURE (MARKING) AND PART NUMBER	REPLACEMENT NOMENCLATURE (MARKING) AND PART NUMBER		
Q1022,1023,1024,1025,1026,1027,2020, 2023,4005,4006	2SA1162GR(SG) G3111620G	2SA812F/G(M6/M7) G3108120F/G	2SA1052C/D(MC/MD) G3110520C/D	2SA1179F/G(M6/M7) G3111790F/G
Q1002,1006,1007,2006,3010	2SC2619B(FB) G3326190B	2SC1009A(FA3/FA4) G3310090A		
Q3003,3005,3007	2SC2620B(QB) G3326200B	2SC2223(F12/F13) G3322230		
Q1008,1011,1012,1014,1015,1017,1018, 1028,1029,1030,1031,1032,1033,1035, 1038,1039,1041,1042,2007,2008,2015, 2017,2018,2019,2022,2024,3011,3012, 4003,4004,4007	2SC2712GR/Y(LG/LY) G3327120G/Y	2SC1623F/G(L6/L7) G3316230F/G	2SC2462C/D(LC/LD) G3324620C/D	2SC2812F/G(L6/L7) G3328120F/G
Q3001,3002	2SC3356(R22) G3333560	2SC2734 G3327340		
D4002	1SS184(B3) G2070009	1S2838(A6) G2070018	DCB015TA(A6) G2070012	

※ Use original types only for Q1013, Q1016 and Q3004

VHF UNIT (obverse view of "mixed component" side)

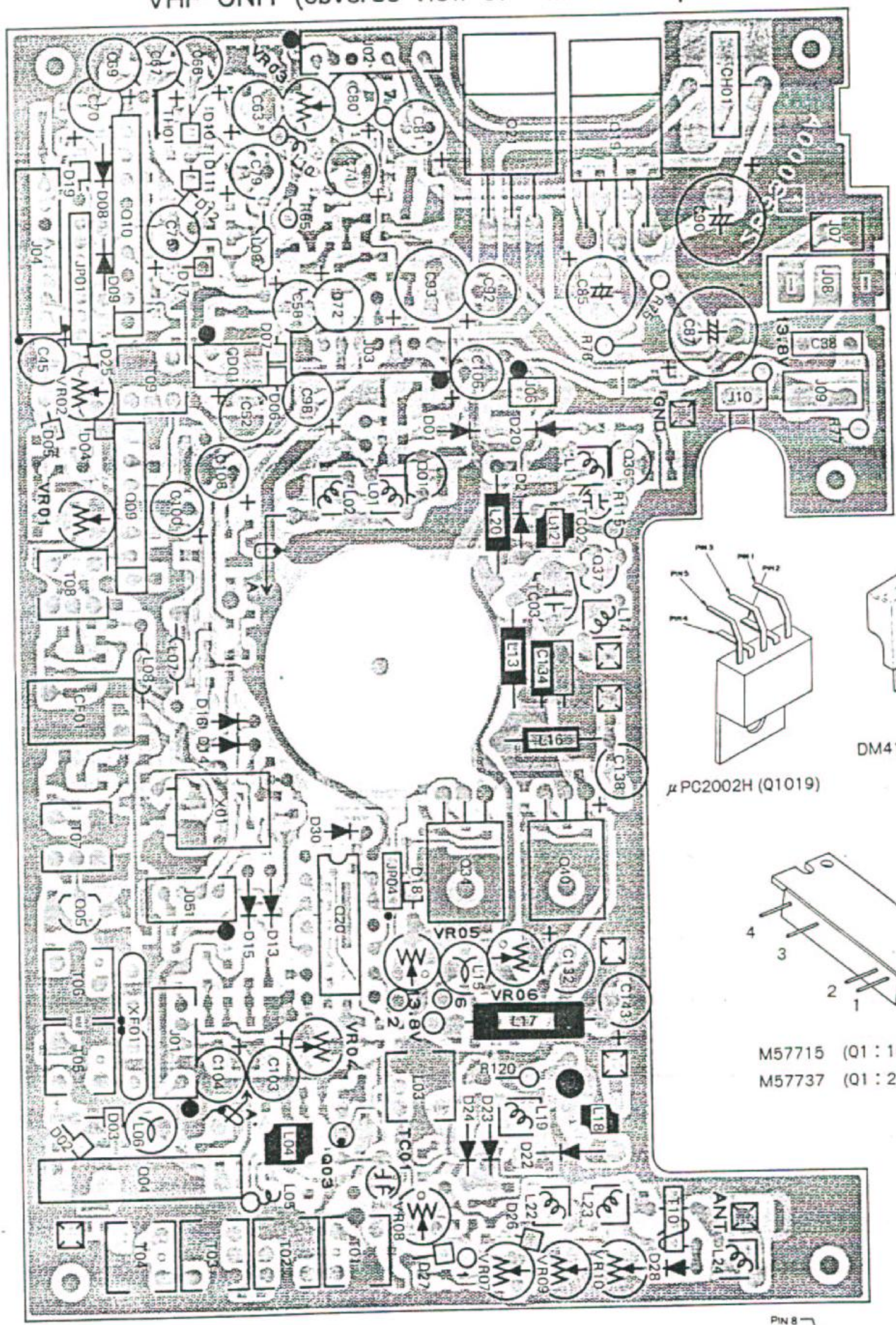

VHF UNIT (reverse view of "chip-only" side)

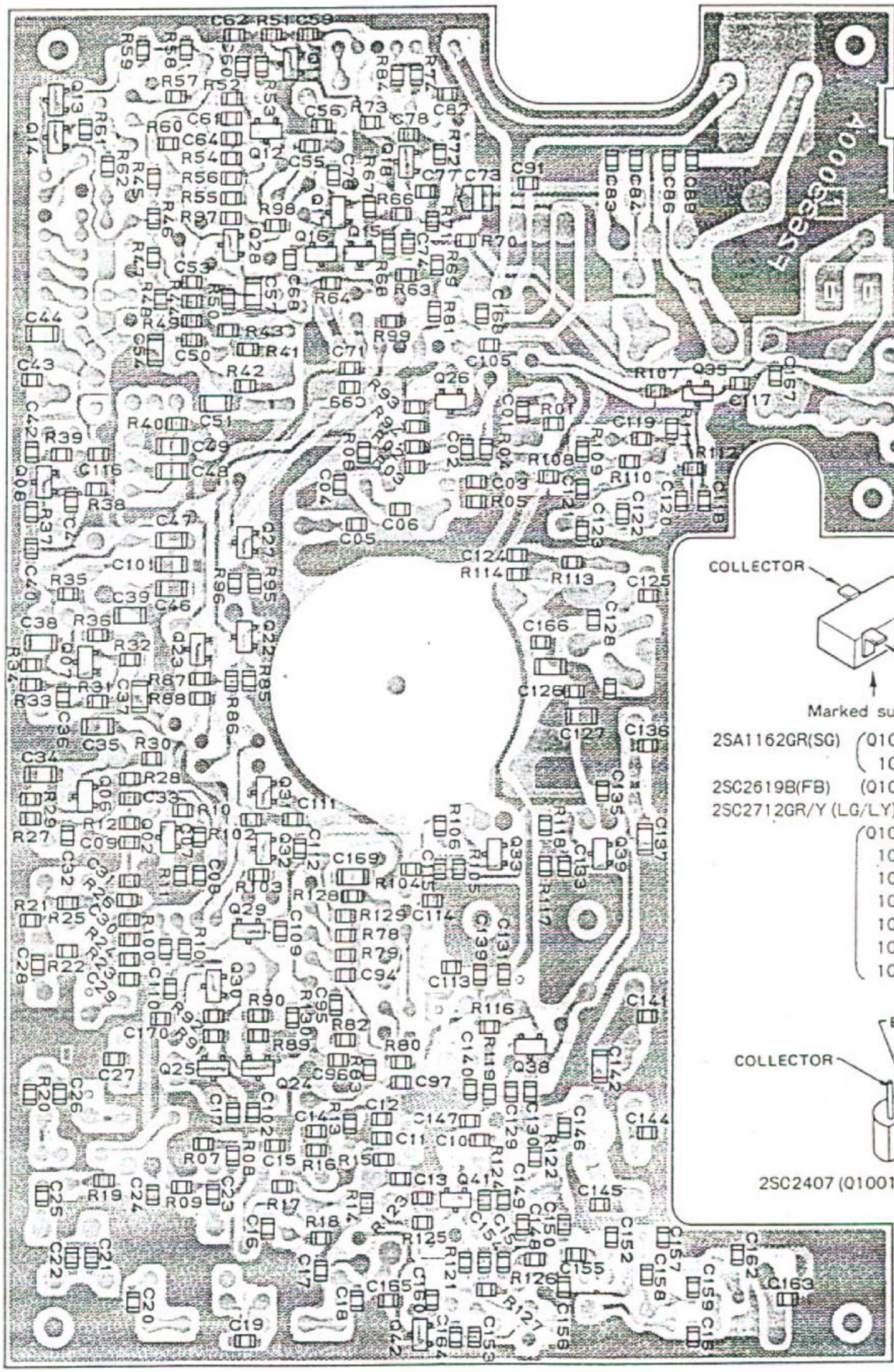

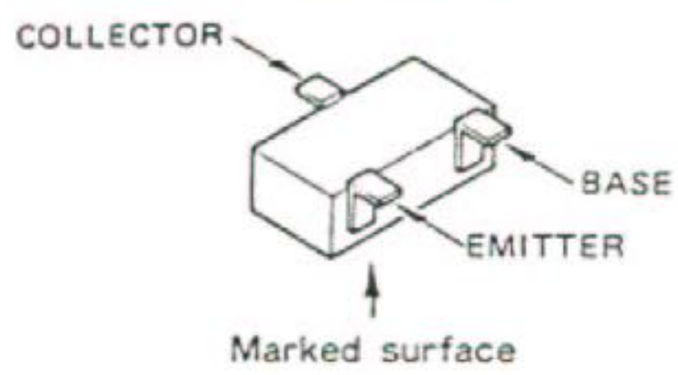

2SA1162GR(SG) (Q1022,1023,1024, 1025,1026,1027)
2SC2619B(FB) (Q1002,1006,1007)
2SC2712GR/Y (LG/LY) (Q1008,1011,1012 1013,1014,1015, 1016,1017,1018, 1028,1029,1030, 1031,1032,1033, 1035,1038,1039, 1041,1042)

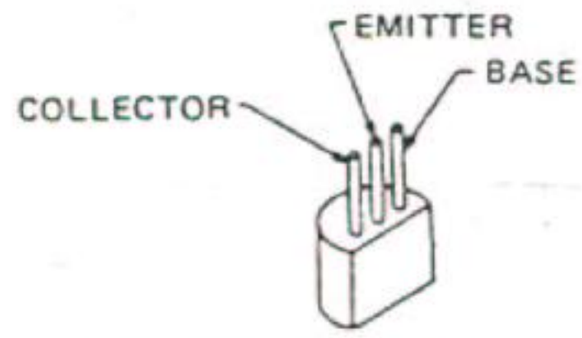

2SC2407 (Q1001, 1036)

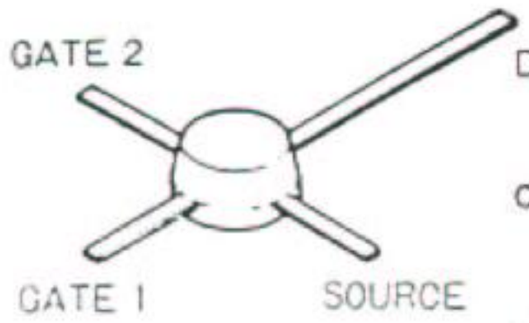

3SK74L (Q1003)

2SA715C (Q1034, 1040)

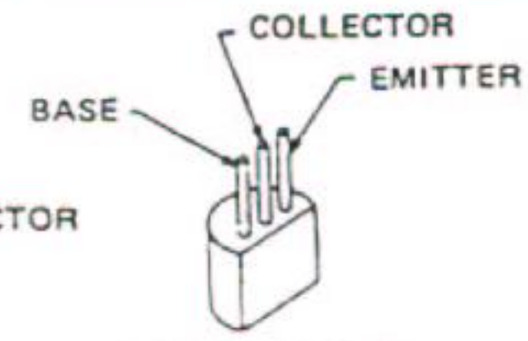

2SC535B (Q1005)

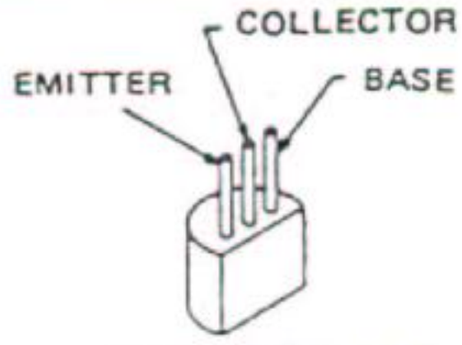

2SC2538 (Q1037)

VHF UNIT (obverse view of "chip-only" side)

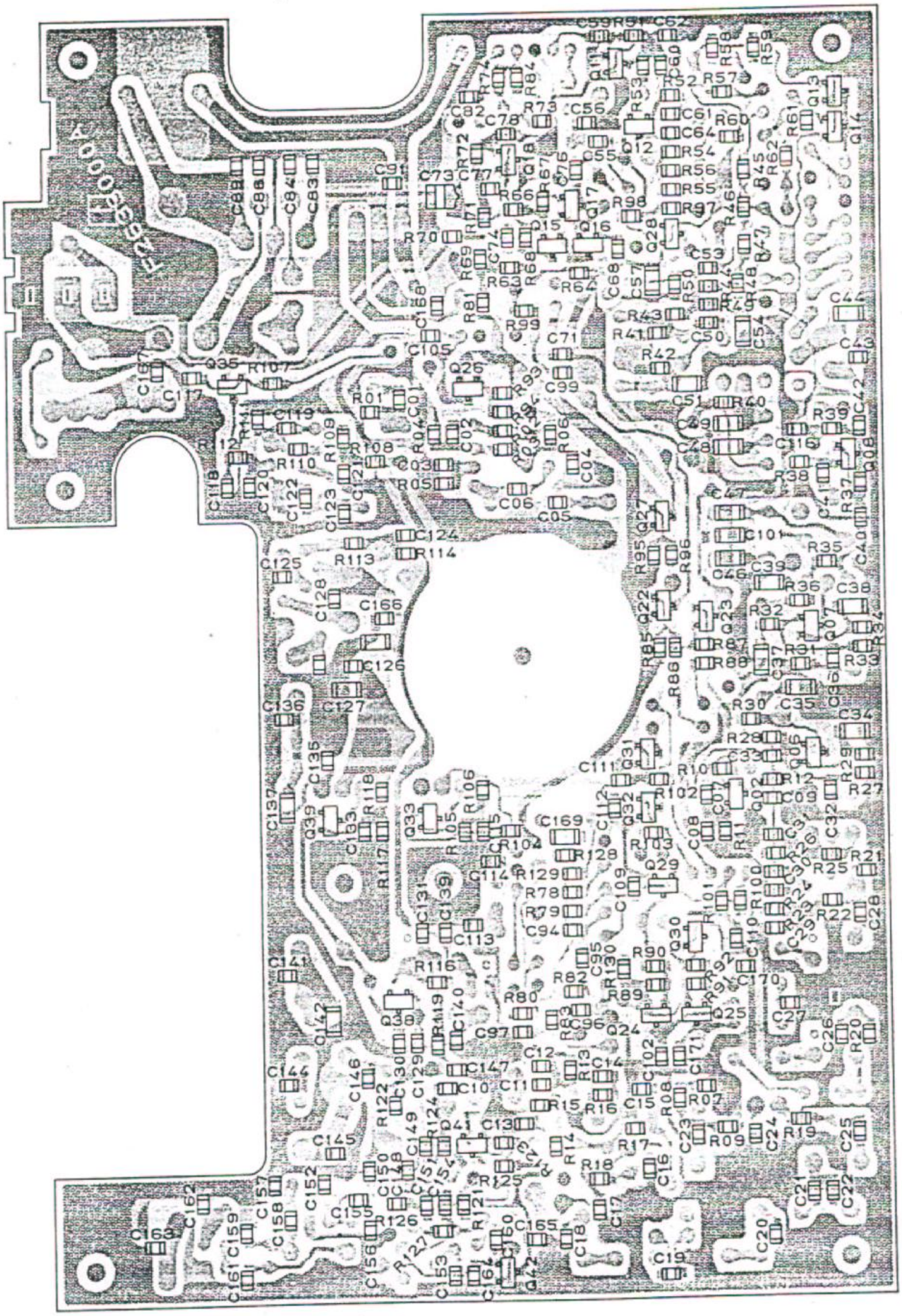

VHF UNIT (reverse view of "mixed component" side)

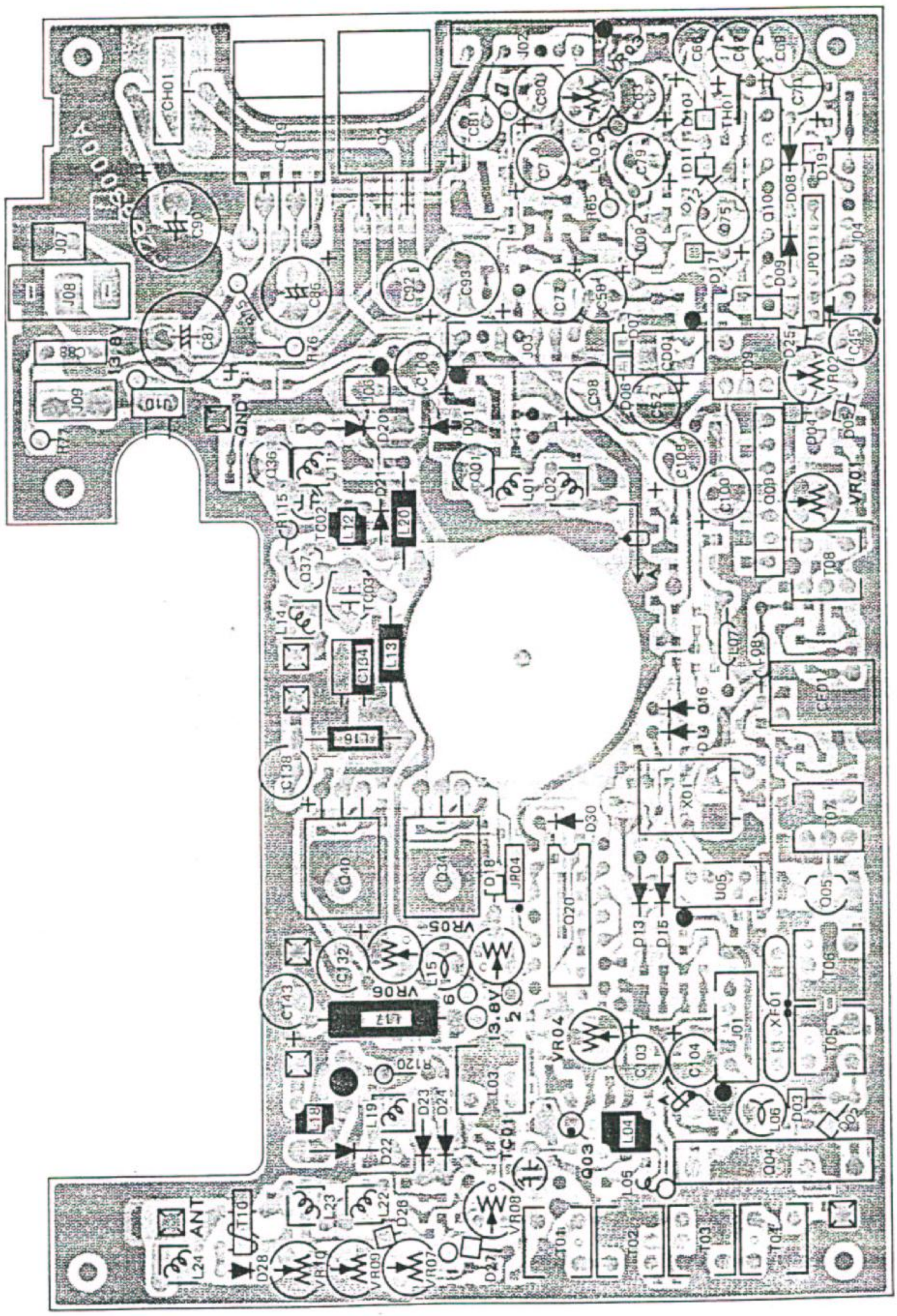

UHF UNIT (obverse view of "mixed component" side)

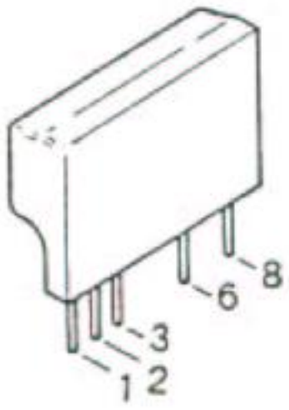

DM411EL (Q2011)

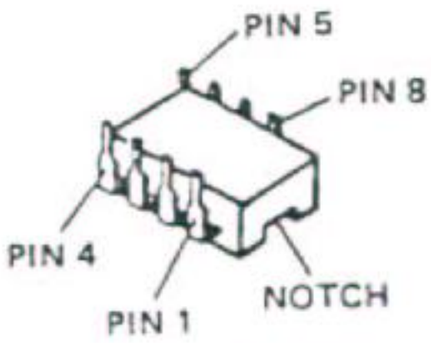

μPB571C (Q2004)

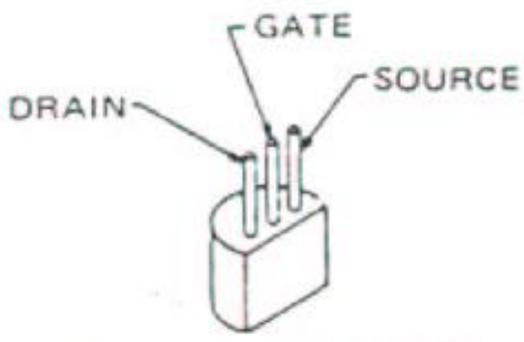

2SK125 (Q2001,2010)

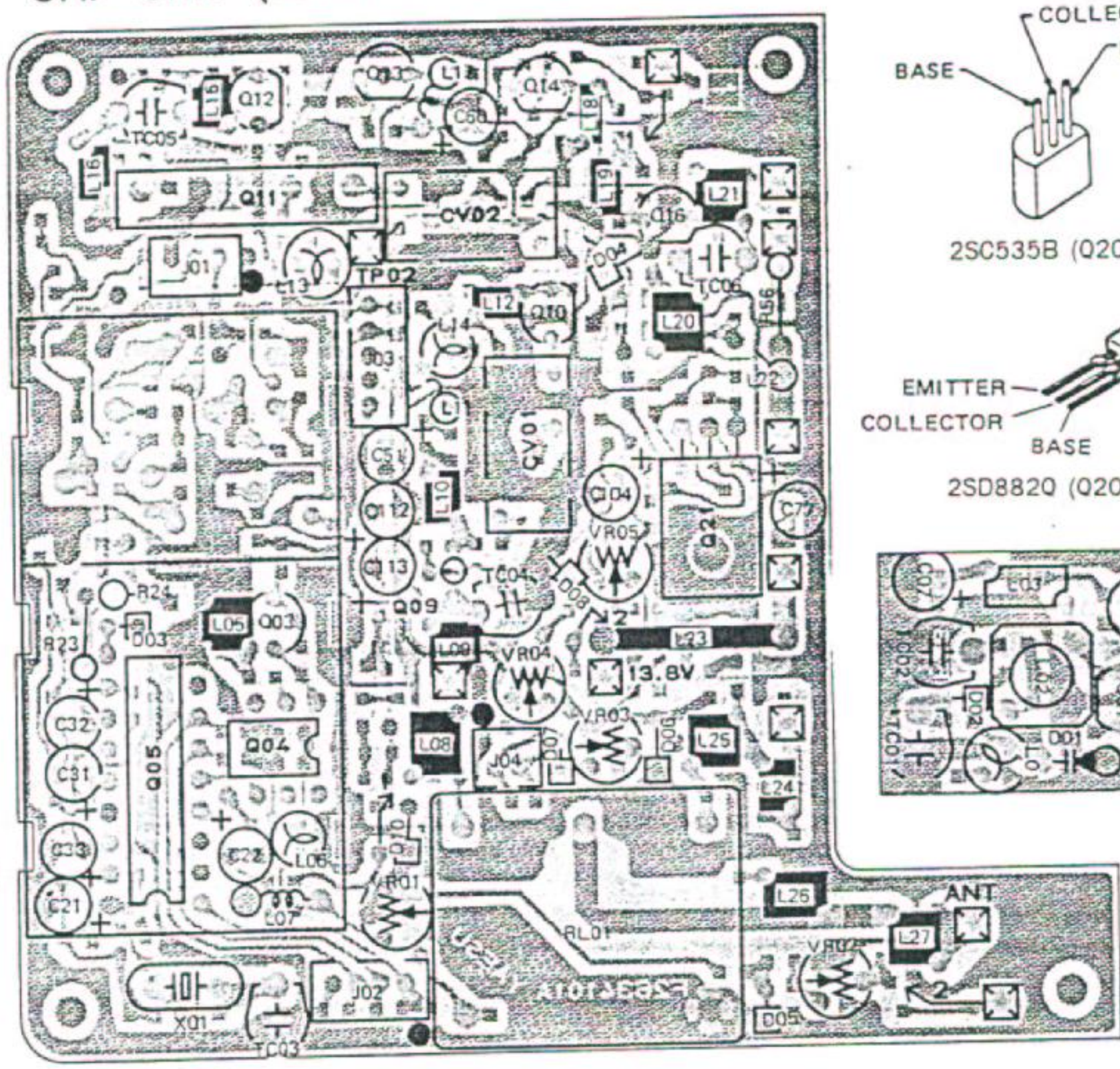

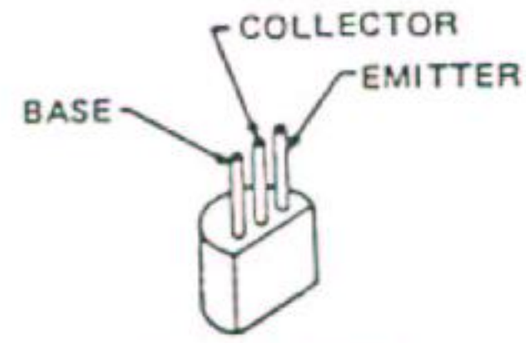

2SC535B (Q2012)

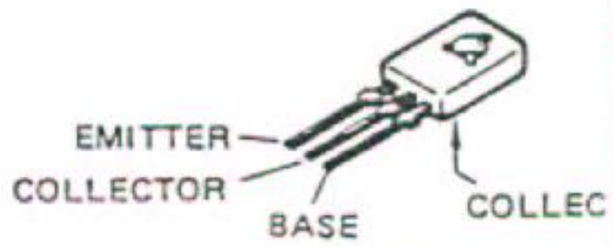

2SD8820 (Q2021)

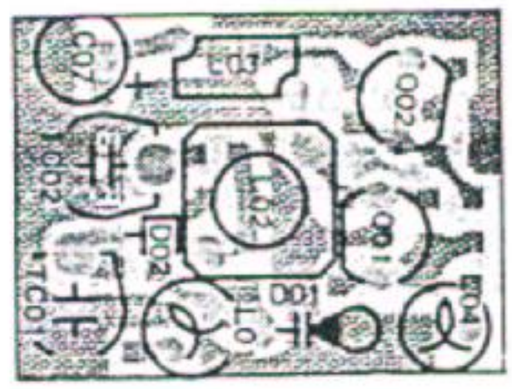

UHF UNIT (reverse view of "chip-only" side)

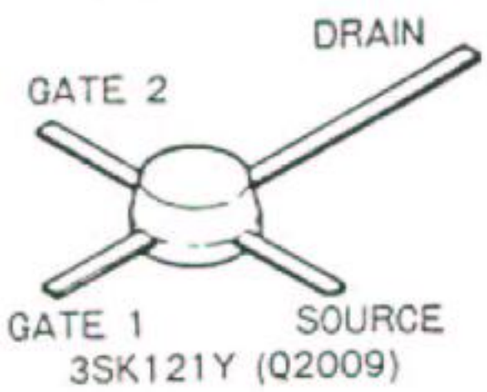

3SK121Y (Q2009)

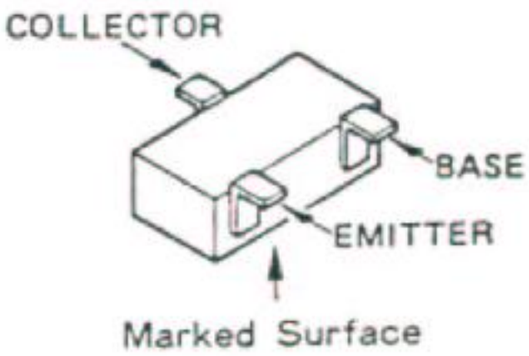

2SA1162GR (SG)
(Q2020,2023)
2SC2619B (FB) (Q2006)
2SC2712GR/Y (LG/LY)
(Q2007,2008,2015,
2017,2018,2019,
2022,2024)

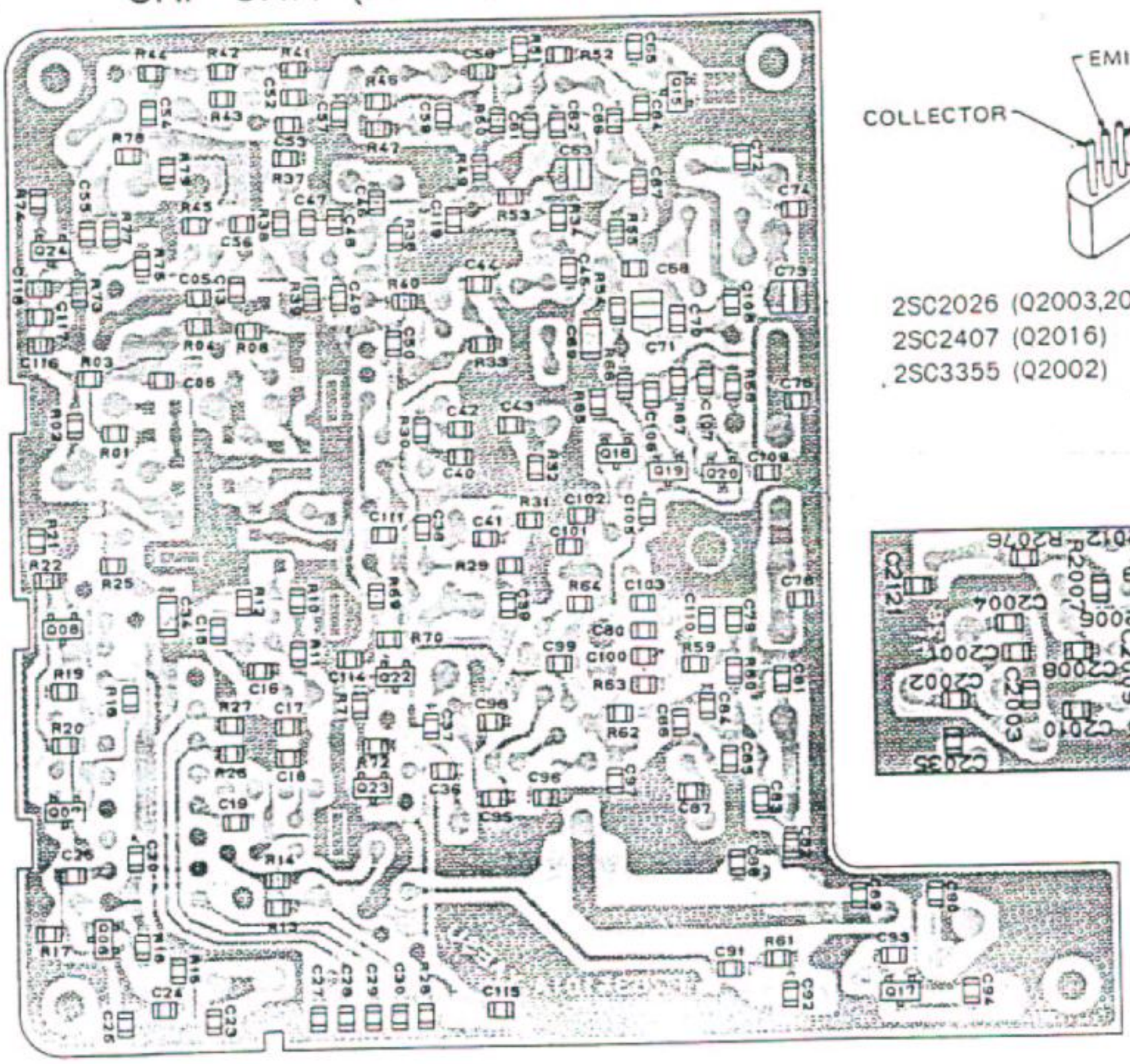

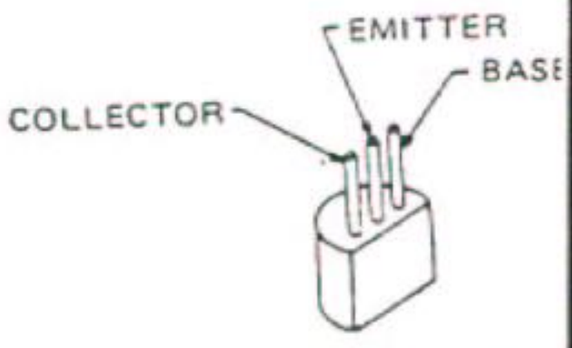

2SC2026 (Q2003,2013,2014)
2SC2407 (Q2016)
2SC3355 (Q2002)

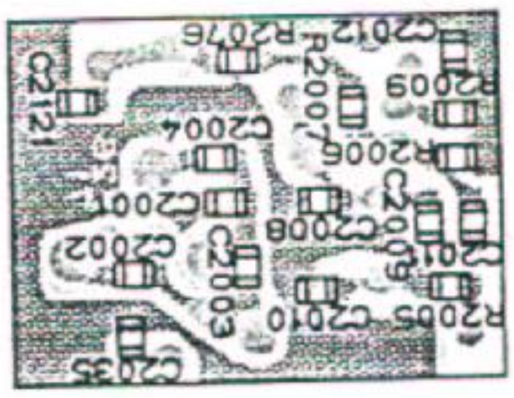

UHF UNIT (obverse view of "chip-only" side)

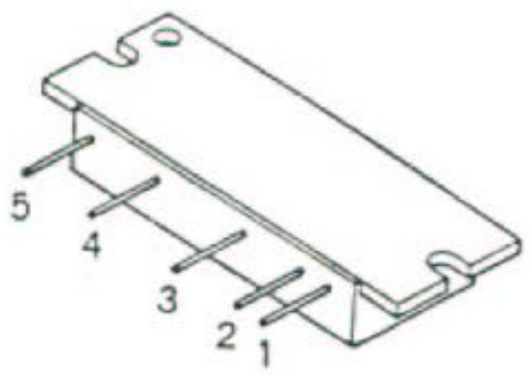

M57704M (Q2 : 10W)
M57729 (Q2 : 25W)

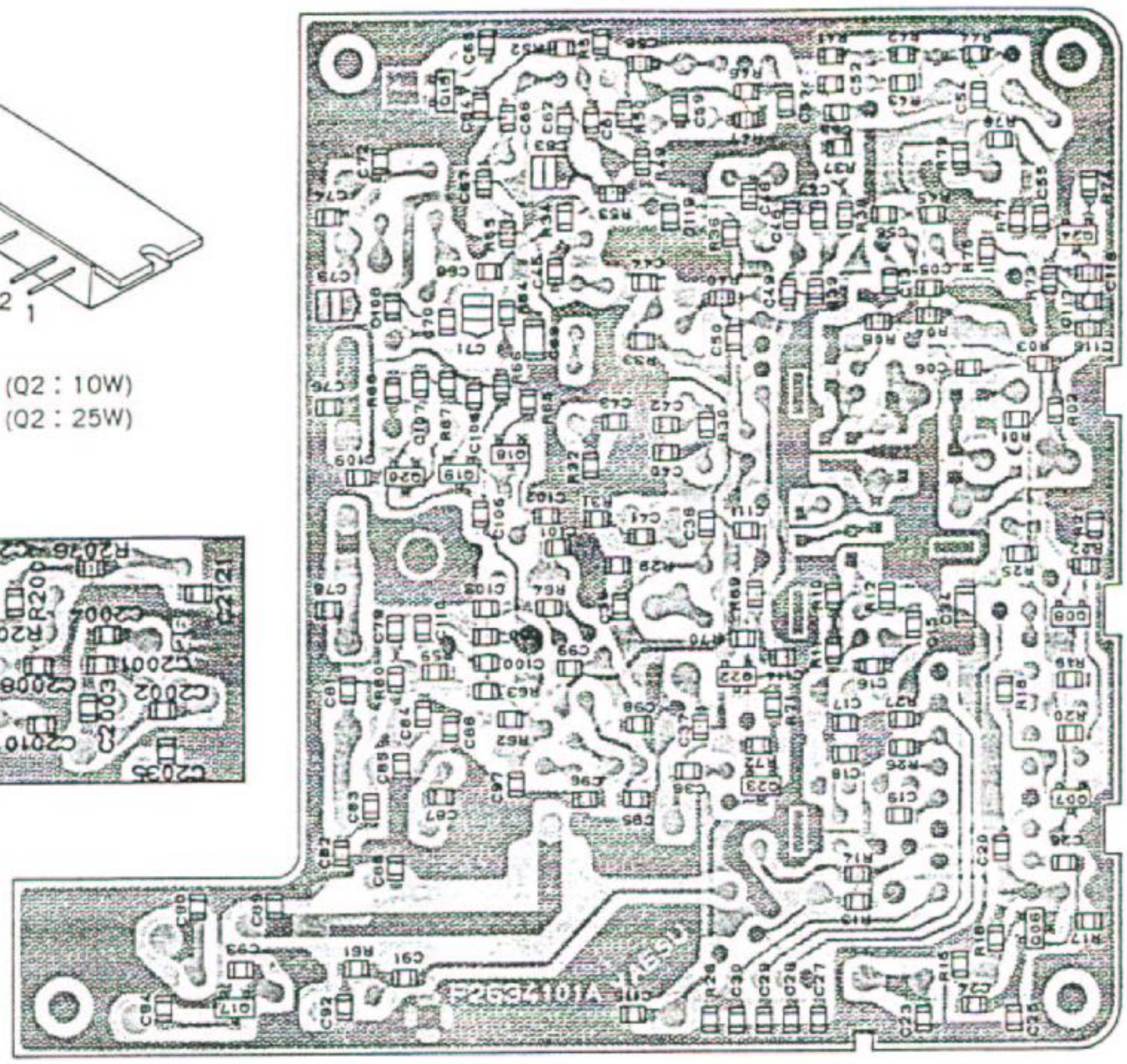

UHF UNIT (reverse view of "mixed component" side)

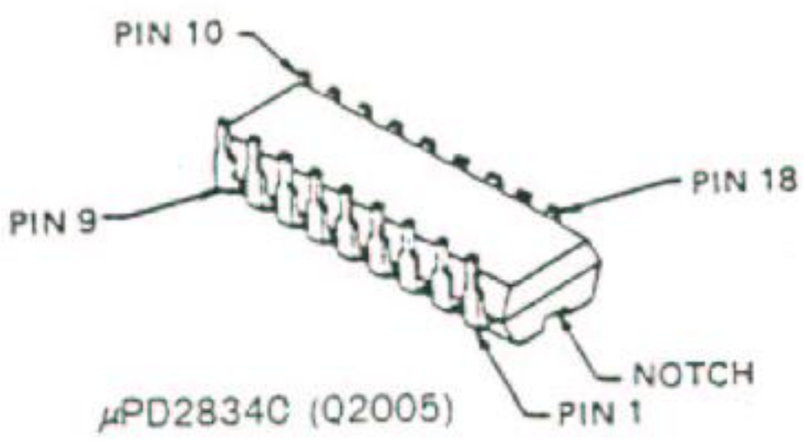

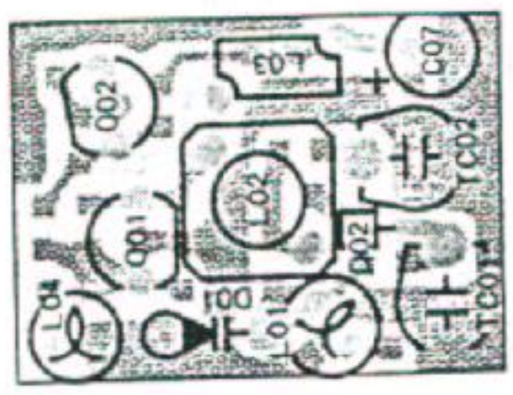

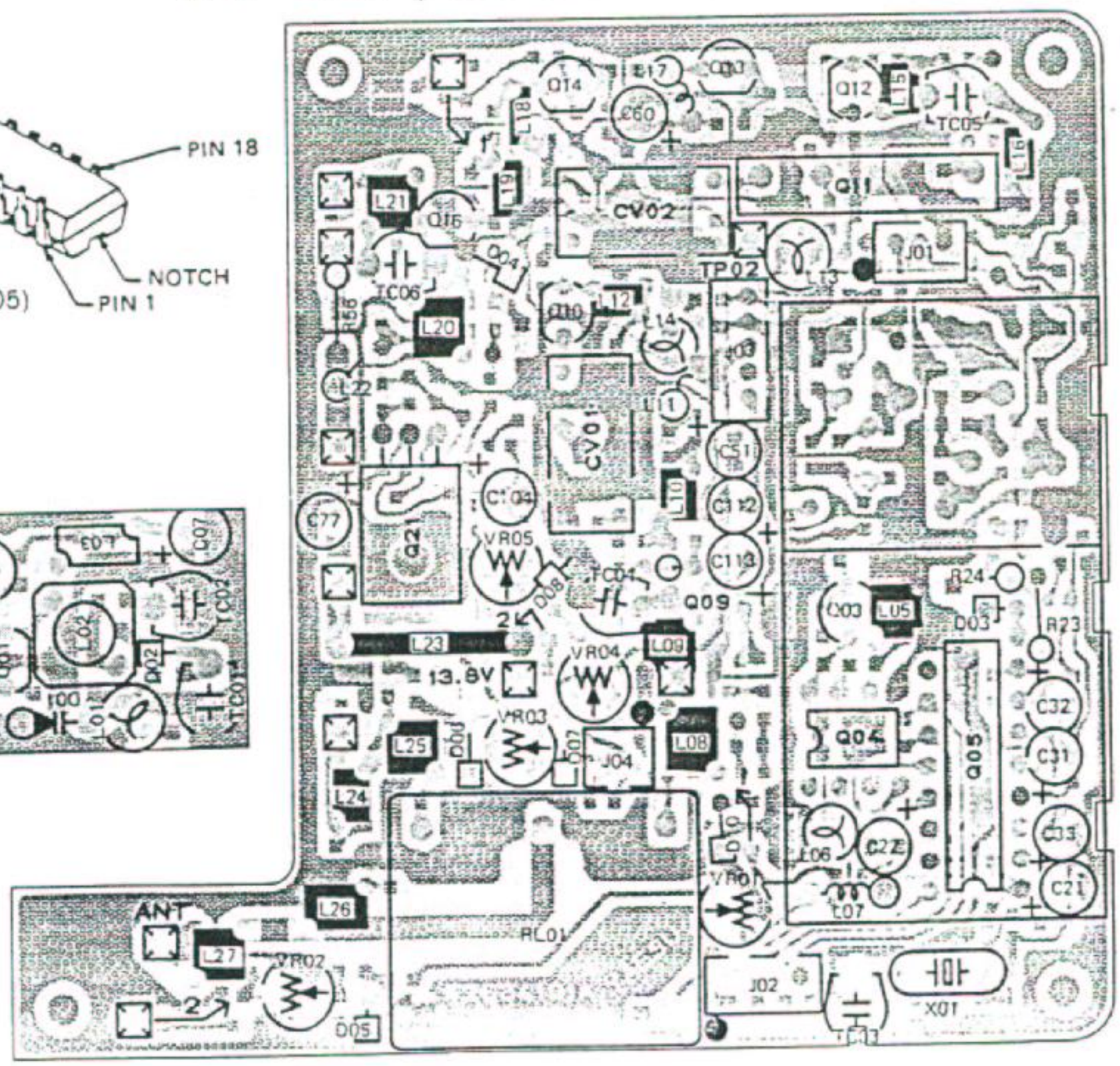

PLL UNIT (obverse view of "mixed component" side)

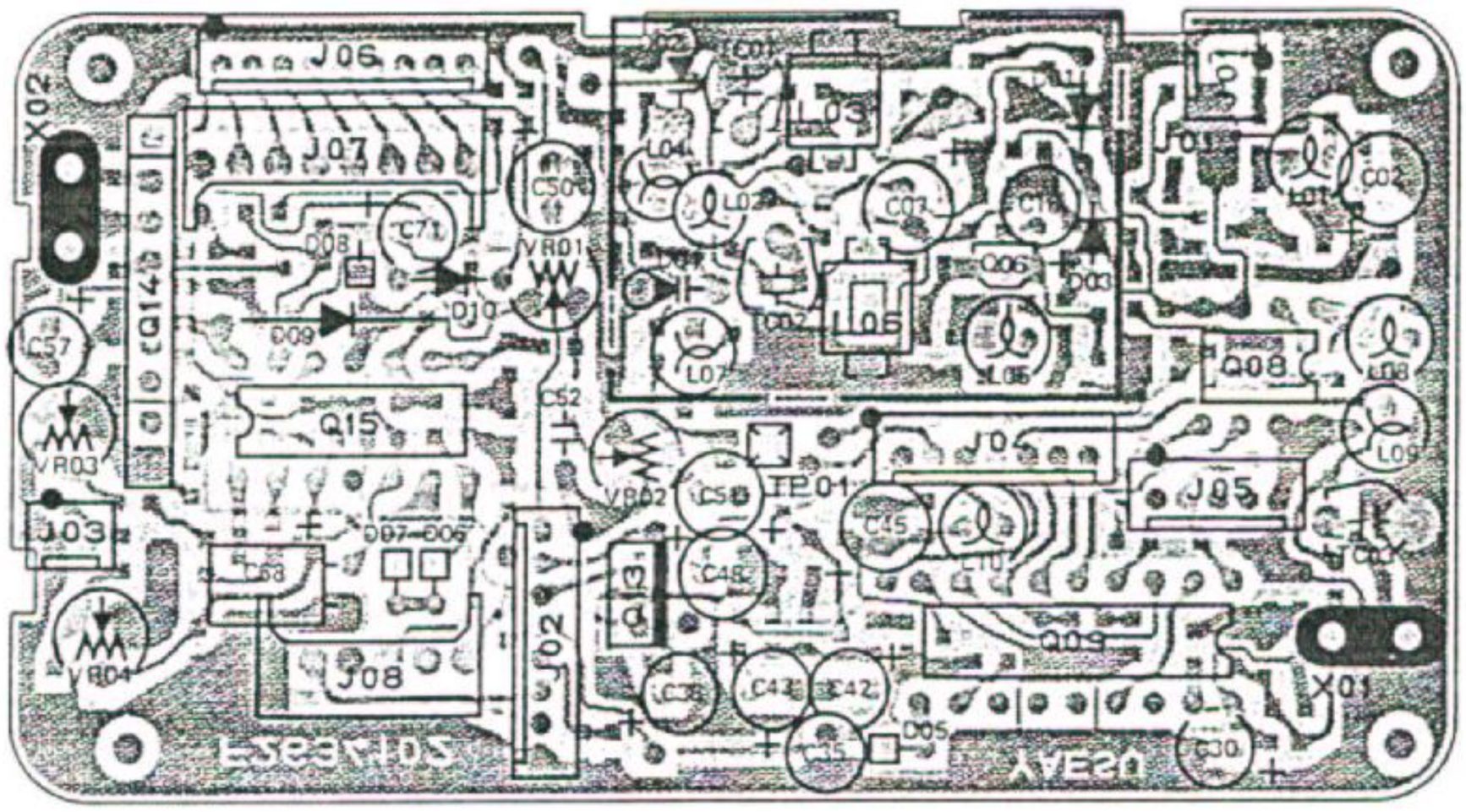

PLL UNIT (reverse view of "chip-only" side)

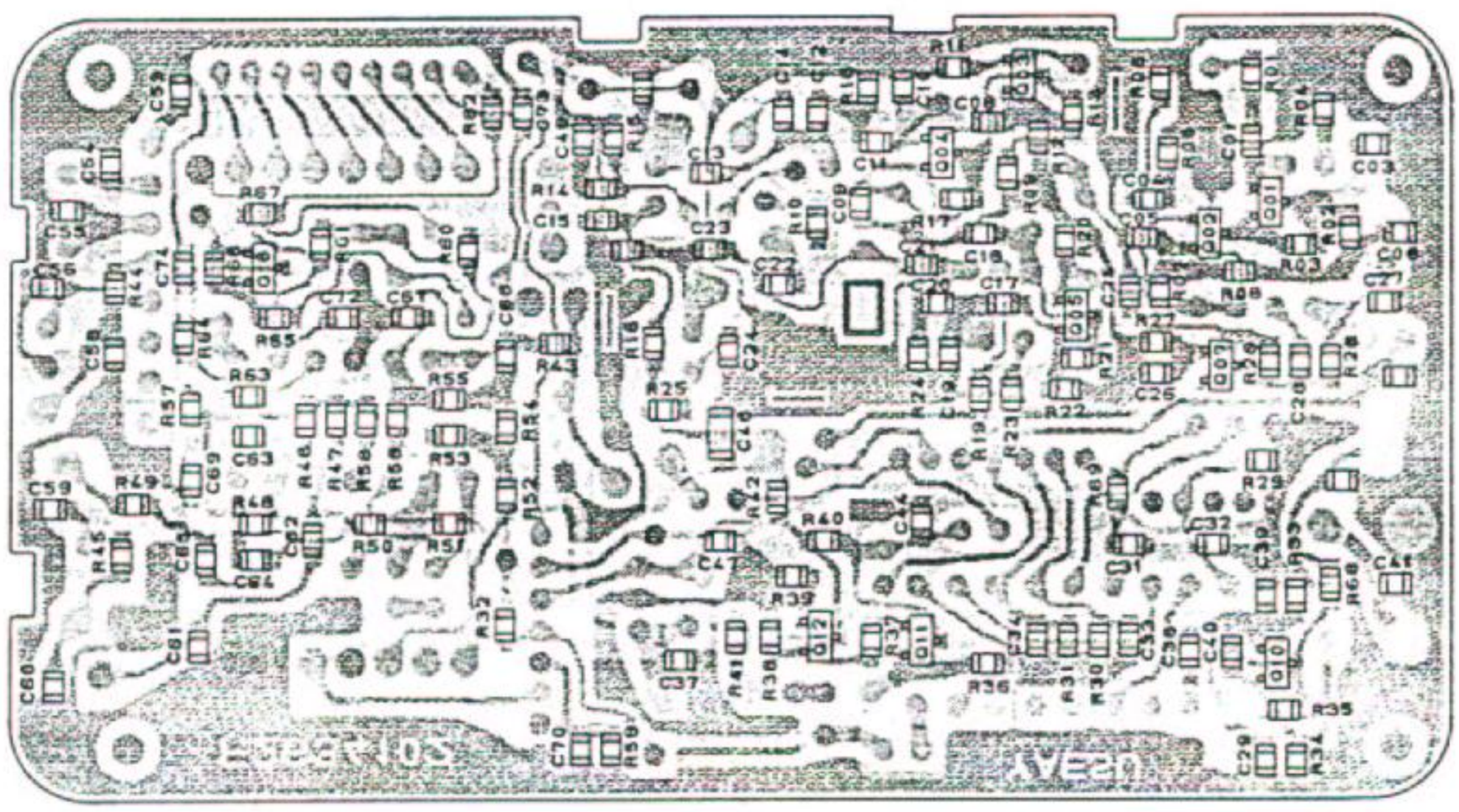

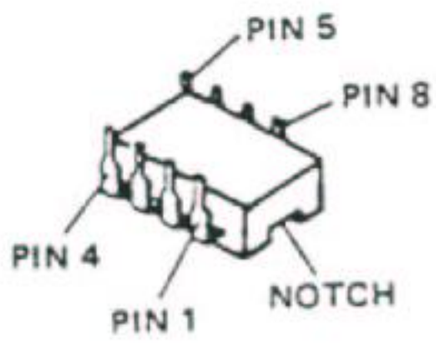

μPB555C (Q3008)

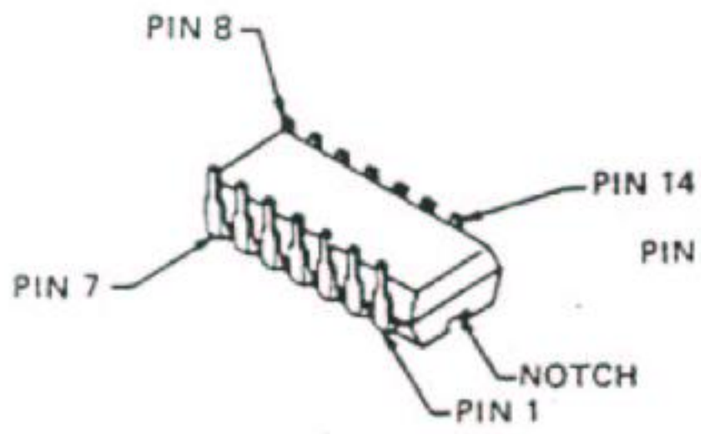

MLM2902P (Q3015)

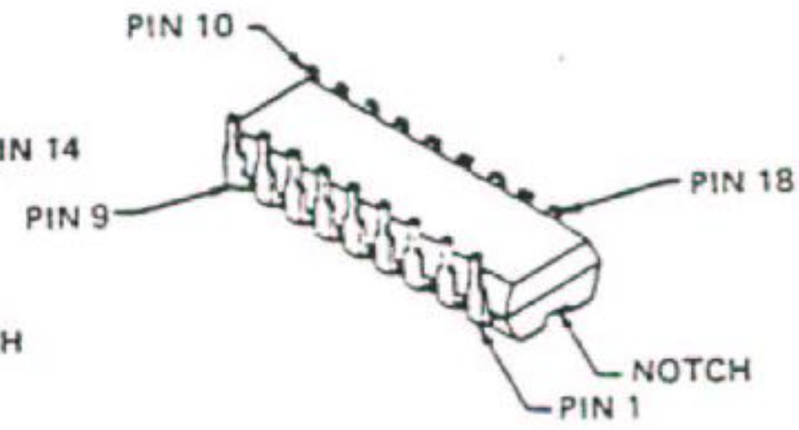

μPD2834 (Q3009)

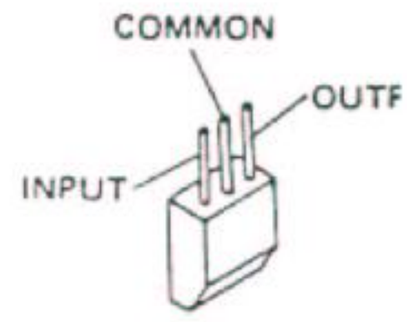

μPC78L05 (Q3013)

PLL UNIT (obverse view of "chip-only" side)

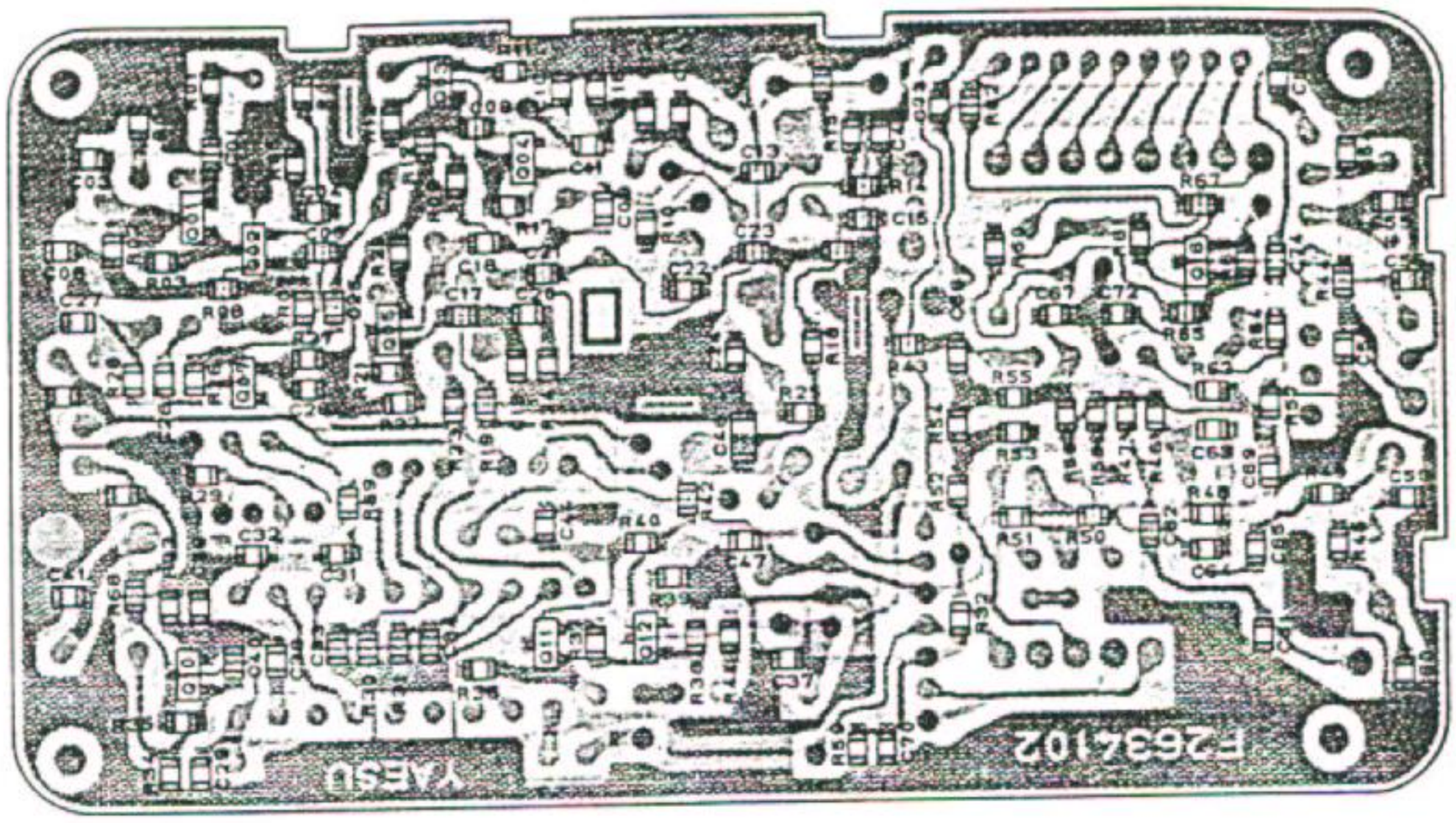

PLL UNIT (reverse view of "mixed component" side)

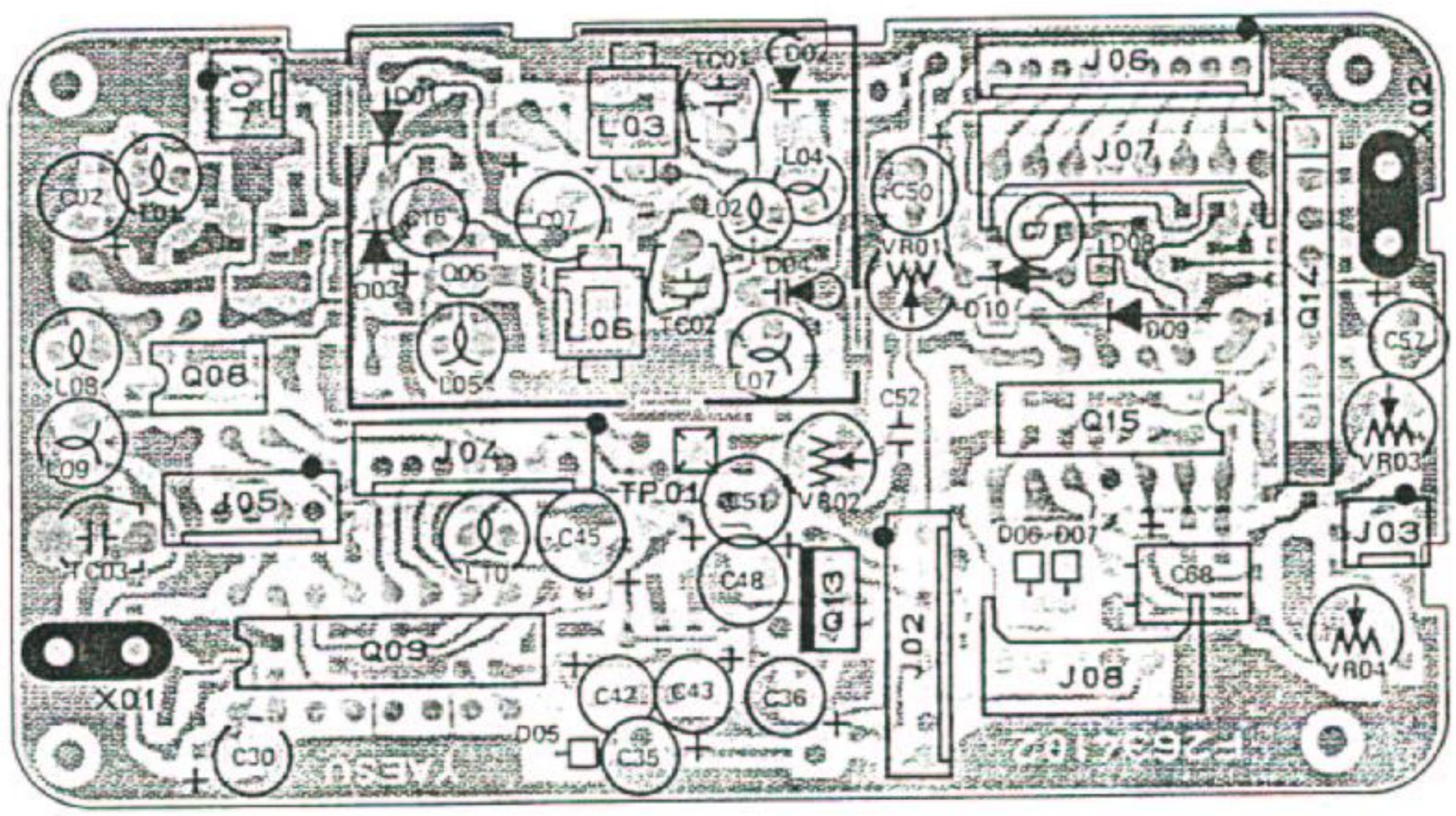

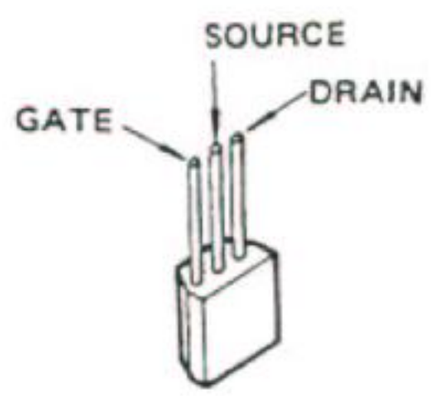

2SK192A-GR (Q3006)

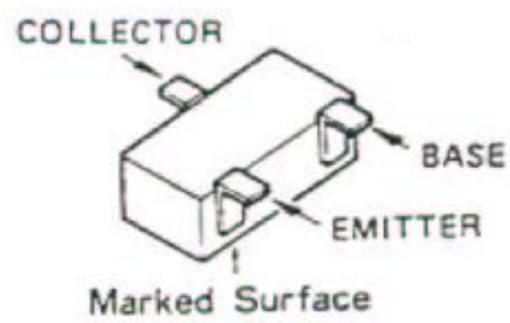

2SC2619B(FB) (Q3010)
2SC2620B(QB) (Q3003,3004,3005,3007)
2SC2712GR Y(LG LY) (Q3011,3012)
2SC3356 R22 Q3001,3002

CONTROL UNIT (obverse view of "switch" side)

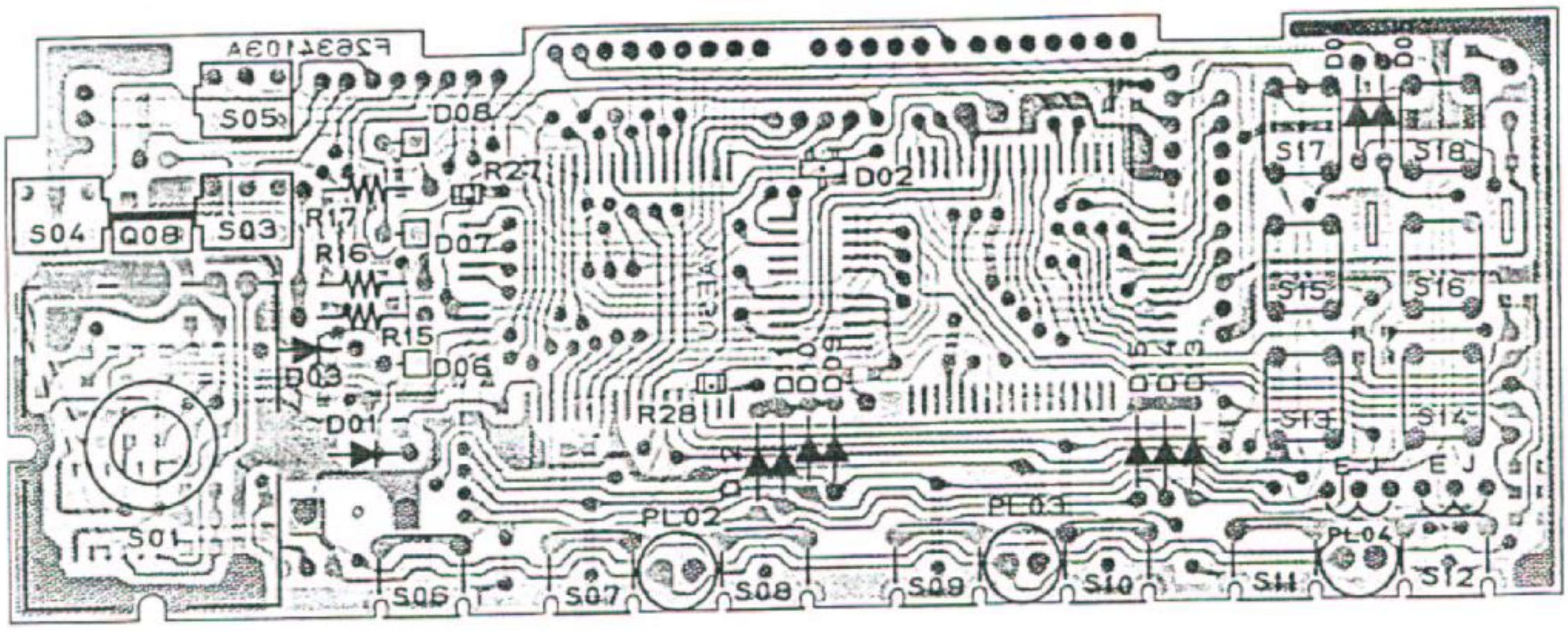

CONTROL UNIT (reverse view of "IC" side)

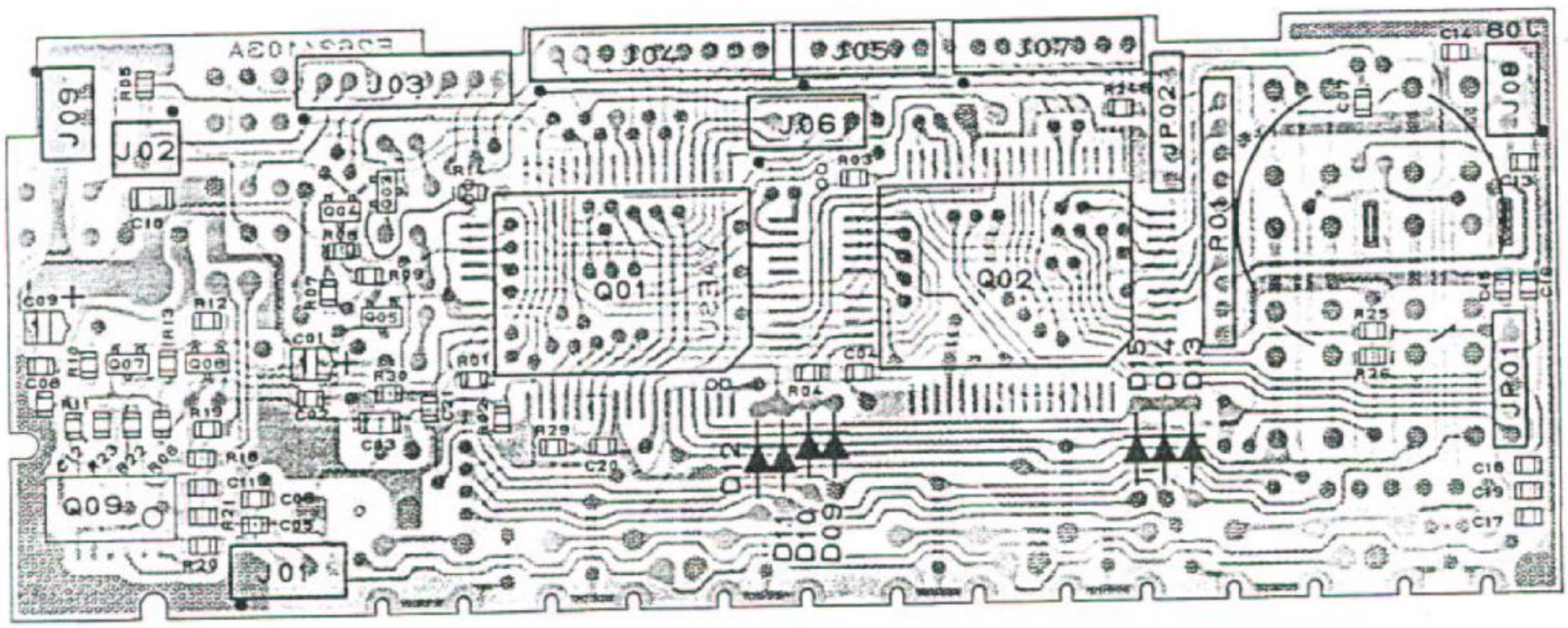

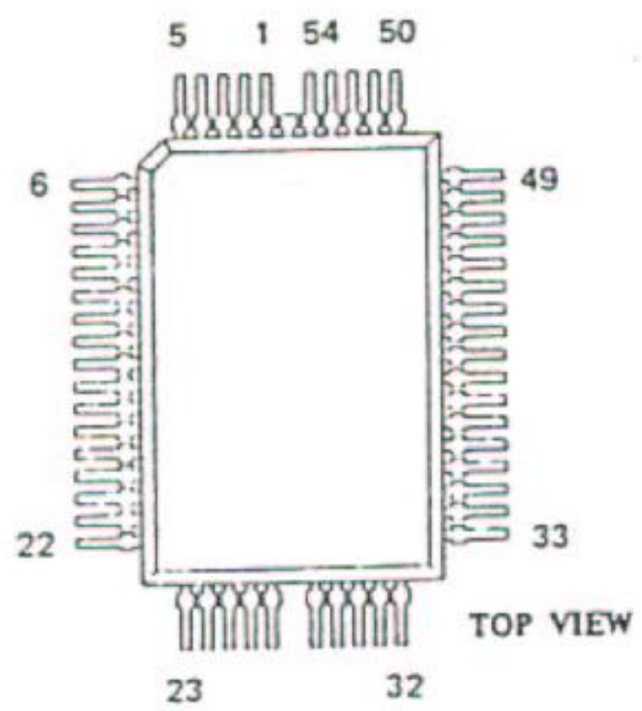

HD44750F11 (Q4002)
HD44868A03 (Q4001)

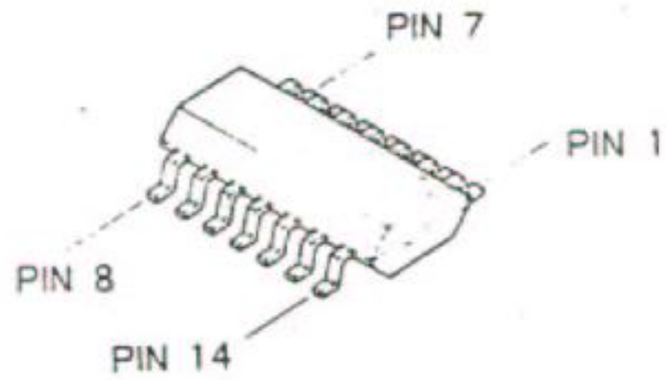

μPD4069UBG (Q4009)

CONTROL UNIT (obverse view of "IC" side)

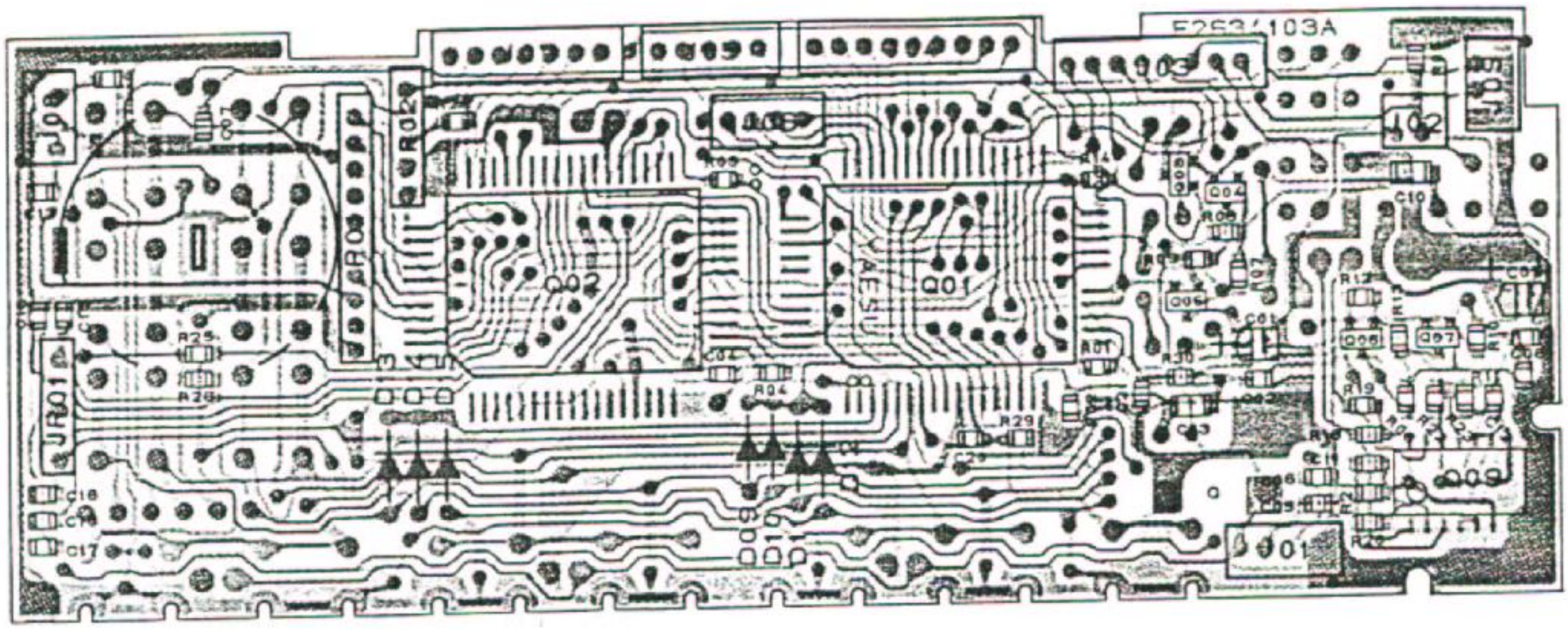

CONTROL UNIT (reverse view of "switch" side)

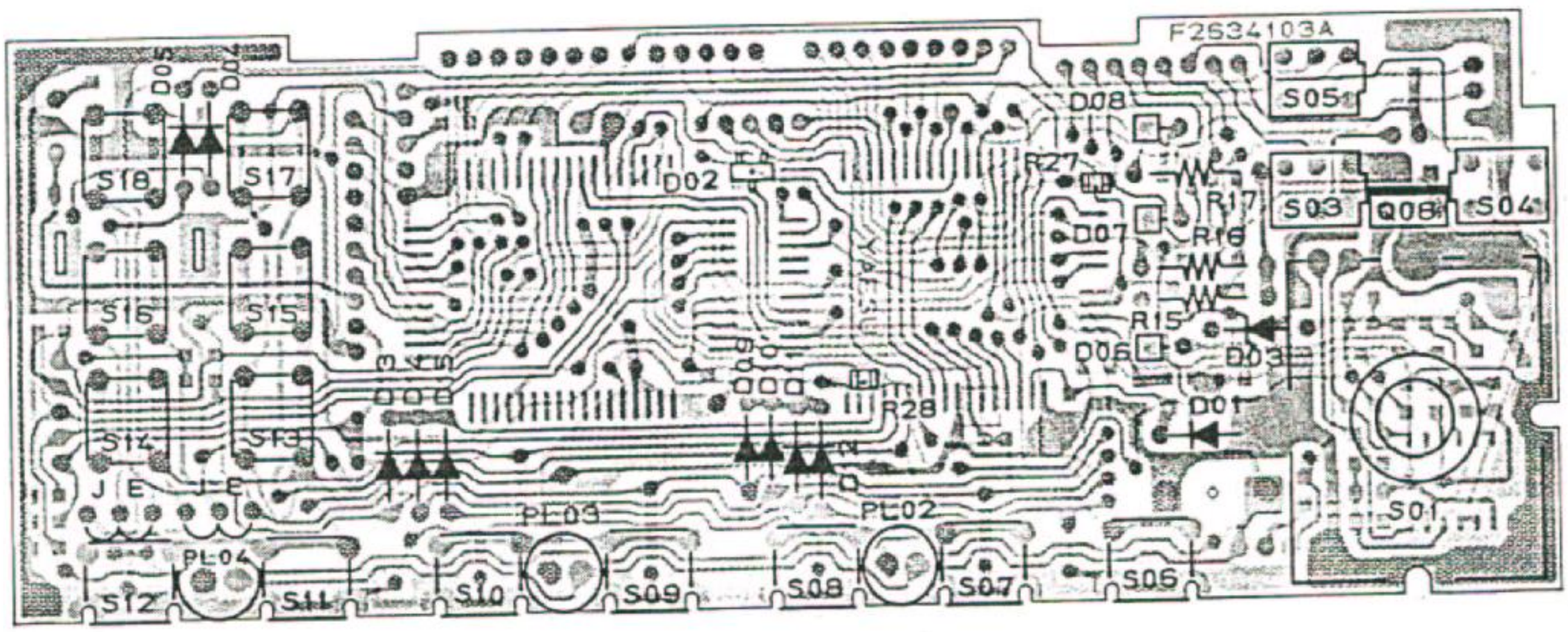

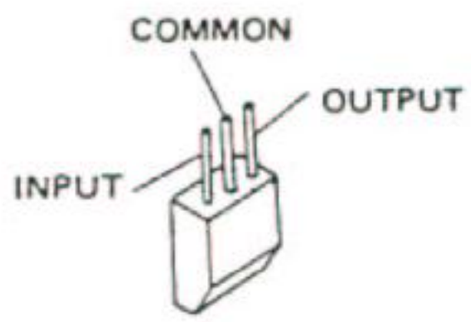

μPC78L05 (Q4008)

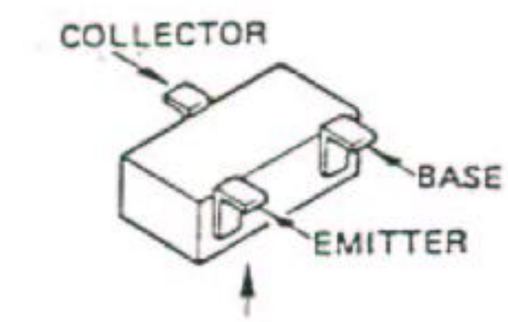

Marked Surface

2SA1162GR(SG) (Q4005,4006)
2SC2712GR/Y(LG/LY)
(Q4003,4004,4007)

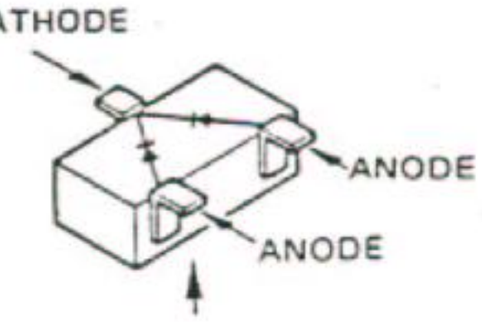

Marked Surface

1SS184(B3) (D4002)

SW(A)UNIT

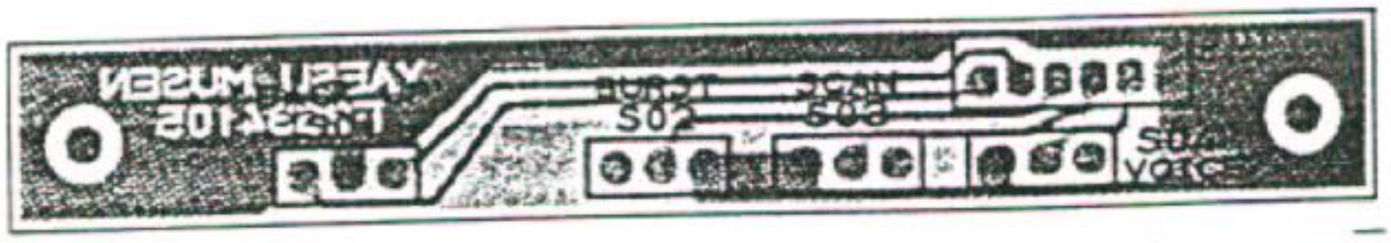

(obverse view of "component" side)

(reverse view of "component" side)

SW(B)UNIT

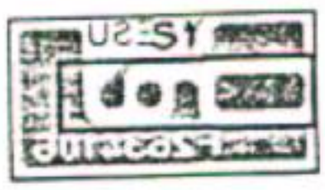

(obverse view of "component" side)

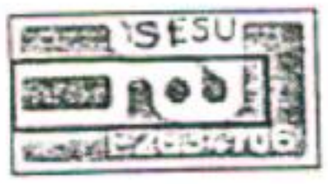

(reverse view of "component" side)

FTS-8 TONE SQUELCH UNIT

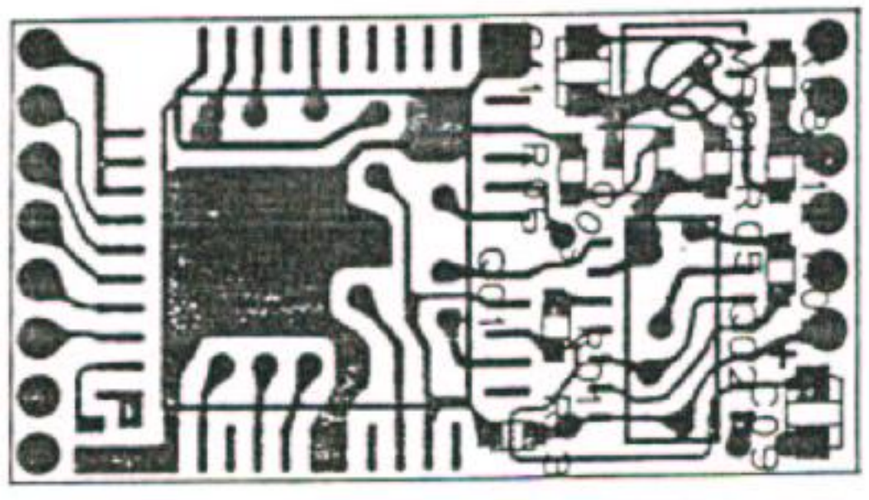

(obverse view of "IC" side)

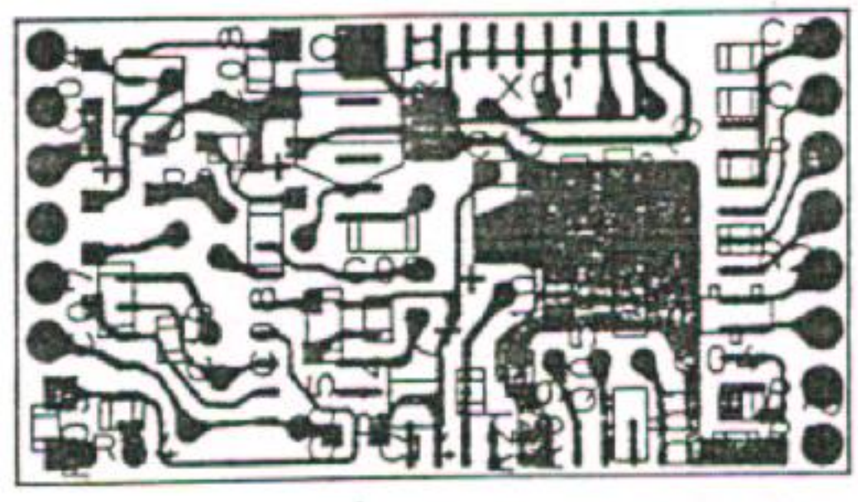

(obverse view of "crystal" side)

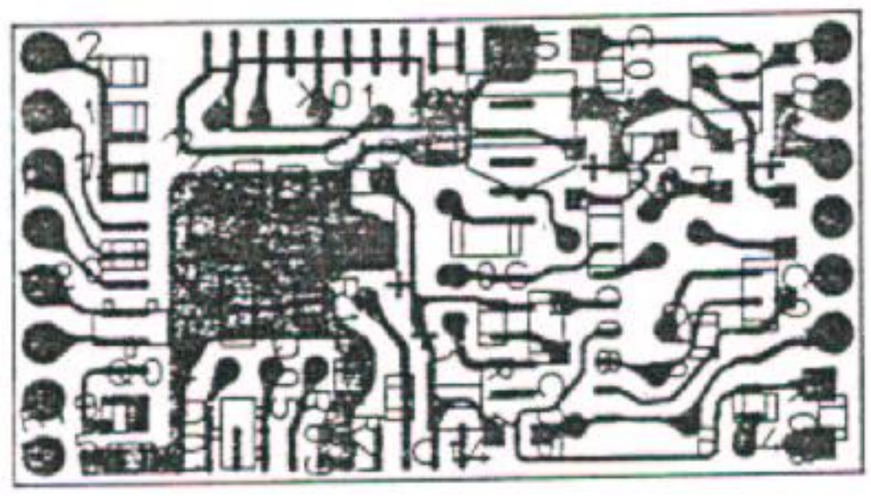

(reverse view of "crystal" side)

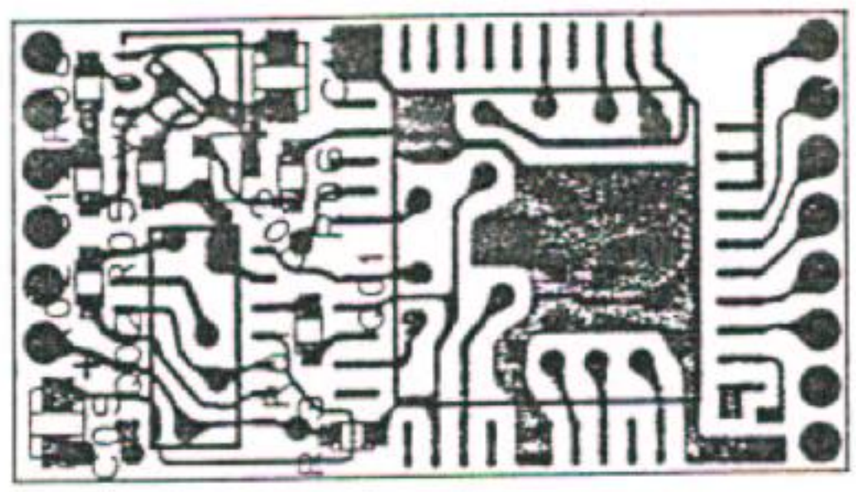

(reverse view of "IC" side)

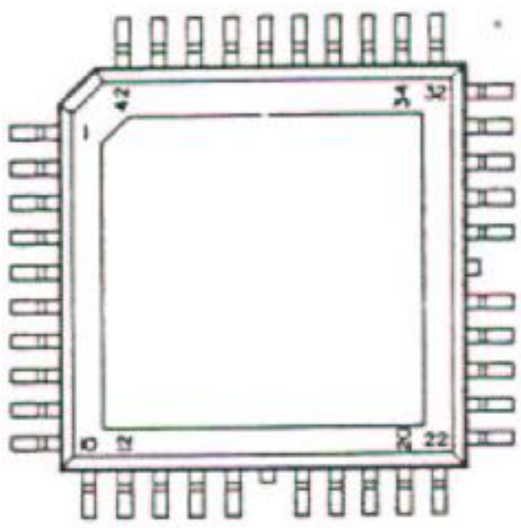

MN6520 (Q1)

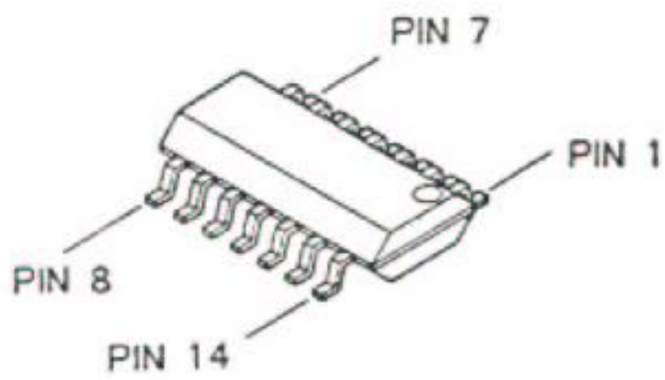

μPD4066BG (Q2)

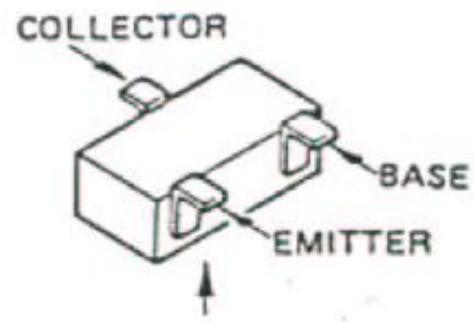

Marked Surface
2SC2712Y/GR (LY/LG) (Q3,4,5)

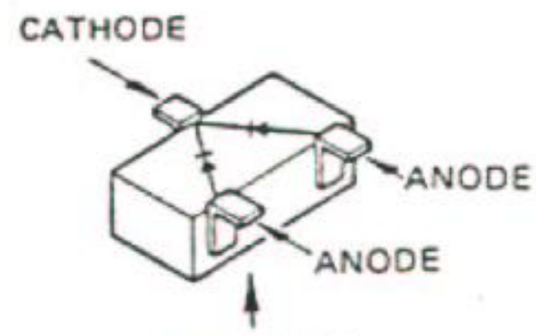

Marked Surface
1SS184 (B3) (D1)

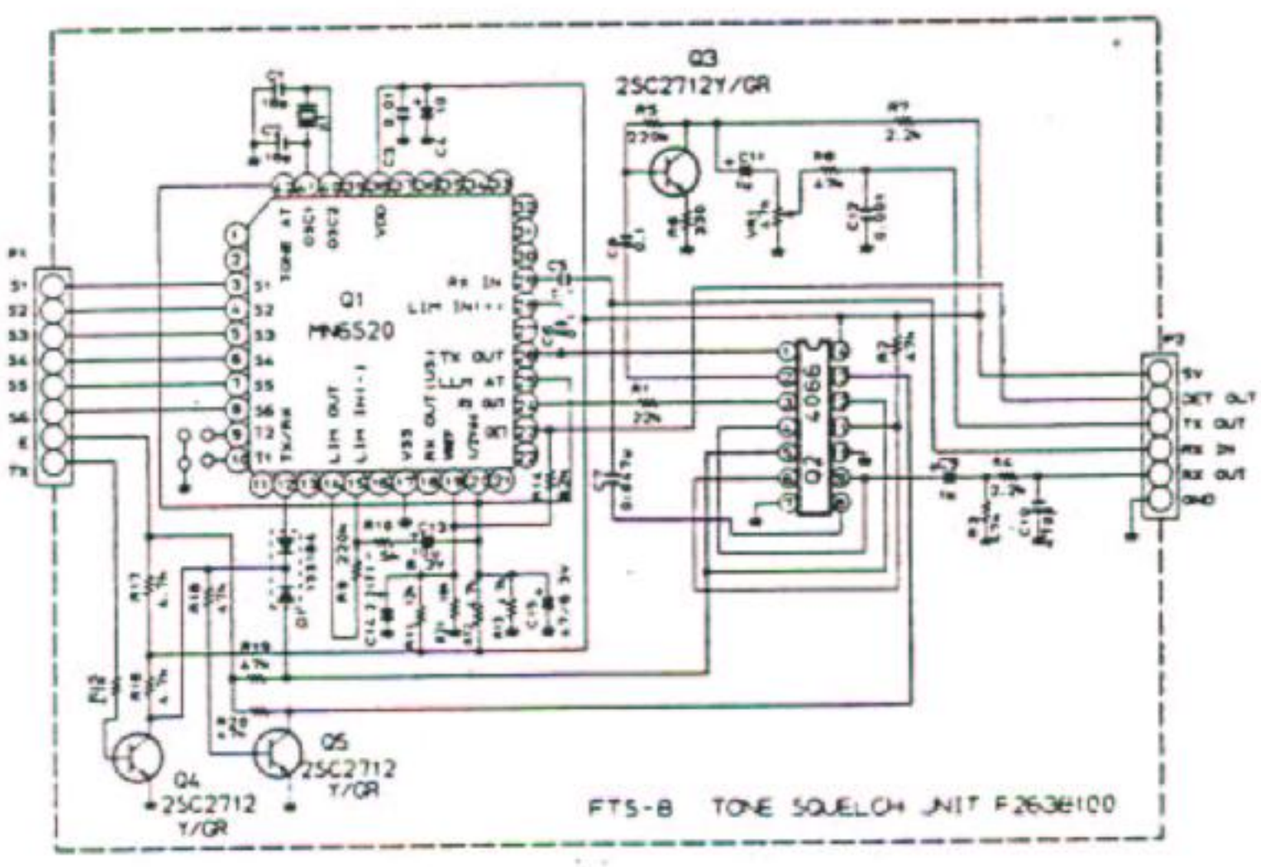

The high reliability of the chip components and robot assembly used for the FT-2700RH make it unlikely that this transceiver will ever require repair or realignment after it has left the factory. However, if damage does occur and some parts subsequently be replaced, realignment may be required afterwards. In the event of a sudden problem during normal operation, do not attempt realignment. Such problems are usually caused by the failure of a component, which must located and replaced before realignment.

Because of the extremely compact circuitry and dual-microprocessor design of this transceiver, we recommend that servicing be attempted only by authorized Yaesu service technicians who are experienced with the circuitry and fully equipped for repair and alignment. Therefore, if a fault is suspected, contact the dealer from whom the transceiver was purchased for instructions regarding repair. Authorized Yaesu service technicians realign all circuits and make complete performance checks to ensure compliance with factory specifications after replacing any faulty components.

Those who do undertake any of the following alignments are cautioned to proceed at their own risk. Yaesu must reserve the right to change circuits and alignment procedures in the interest of improved performance, without notifying owners.

Under no circumstances should any alignment be attempted unless the normal function and operation of the transceiver are clearly understood, the cause of the malfunction has been clearly pinpointed and any faulty components replaced, and the need for realignment determined to be absolutelynecessary.

The following test equipment (and thorough familiarity with its correct use) is necessary for complete realignment. Correction of problems caused by misalignment resulting from use of improper test equipment is not covered under the warranty policy.

In those procedures so indicated, a 50-ohm dummy load that is non-reactive up to 450 MHz must be used. Correct alignment is not possible with an antenna.

Alignment Precautions

Correct alignment requires that the ambient temperature be the same as that of the transceiver and test equipment, and that this temperature be held constant between 20 and 30 degrees C (68 to 86 degrees F). When the transceiver is brought into the shop it should be allowed at least 2 hours for thermal equalization before alignment.

Alignments must not be made unless the oscillator shields and circuit boards are firmly affixed in place. Also, the frequency counter must be thoroughly warmed up before beginning.

Supply voltage during alignment must be held constant at 13.8V DC, except where specifically indicated otherwise. Use a well regulated, adjustable power supply capable of at least 8A continuous load. The DC ammeter should be connected in series with the supply.

Alignment Equipment

DC voltmeter (at least 20-kilohms/volt impedance)

DC Ammeter (10A)

AF millivoltmeter

450 MHz standard signal generator (SSG) with calibrated level and modulation (see note below)

AF signal generator

SINAD meter (SINADDER)

FM linear detecter (deviation meter)

CM coupler (directional coupler)

RF wattmeter (50W, ±5% @ 450MHz)

50-ohm non-reactive (@450 MHz) dummy load

Frequency counter (100Hz resolution at 450MHz)

Oscilloscope

Note: SSG levels referred to in the alignment procedure are based on 0dBu=0.5uV.

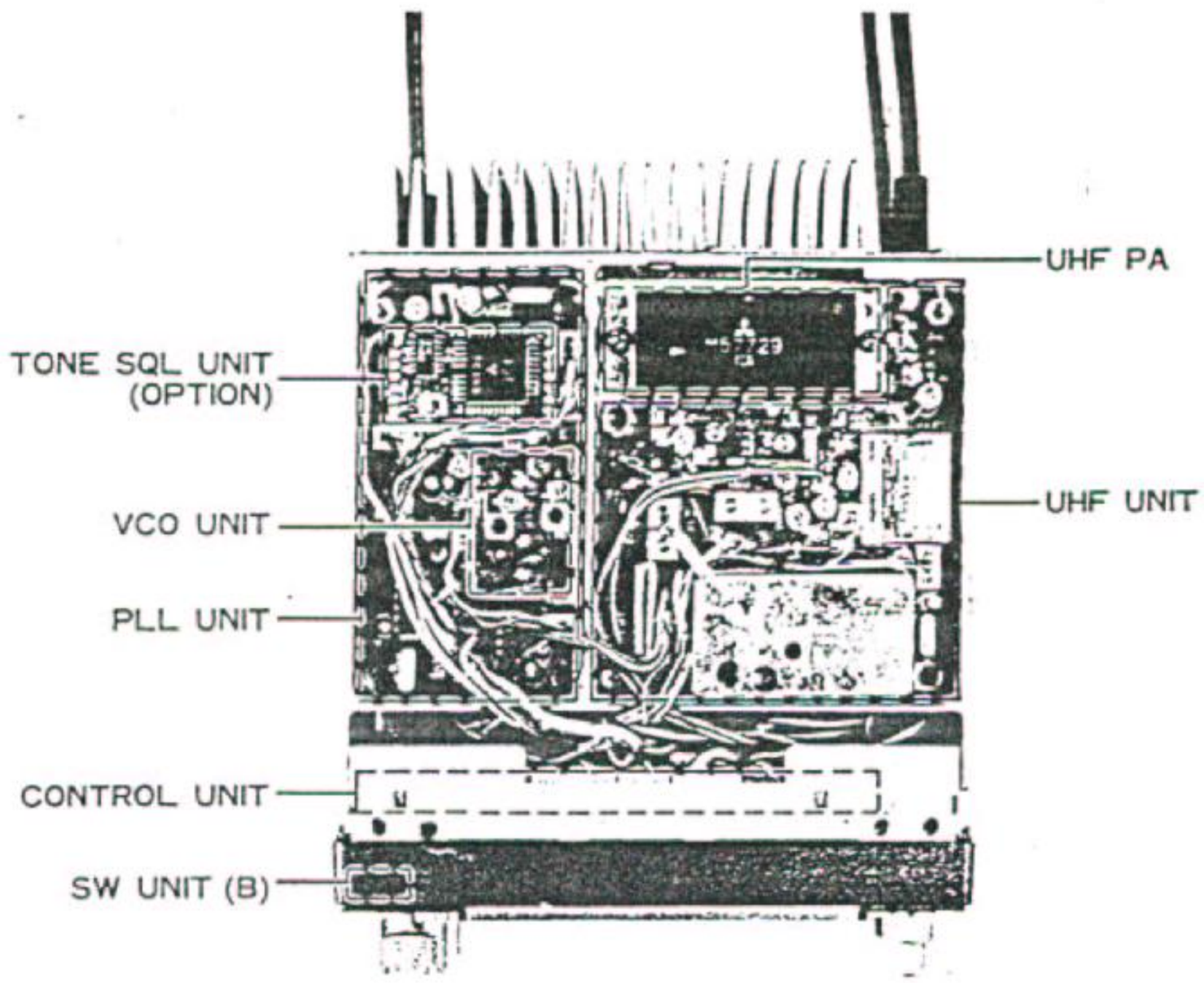

TOP VIEW

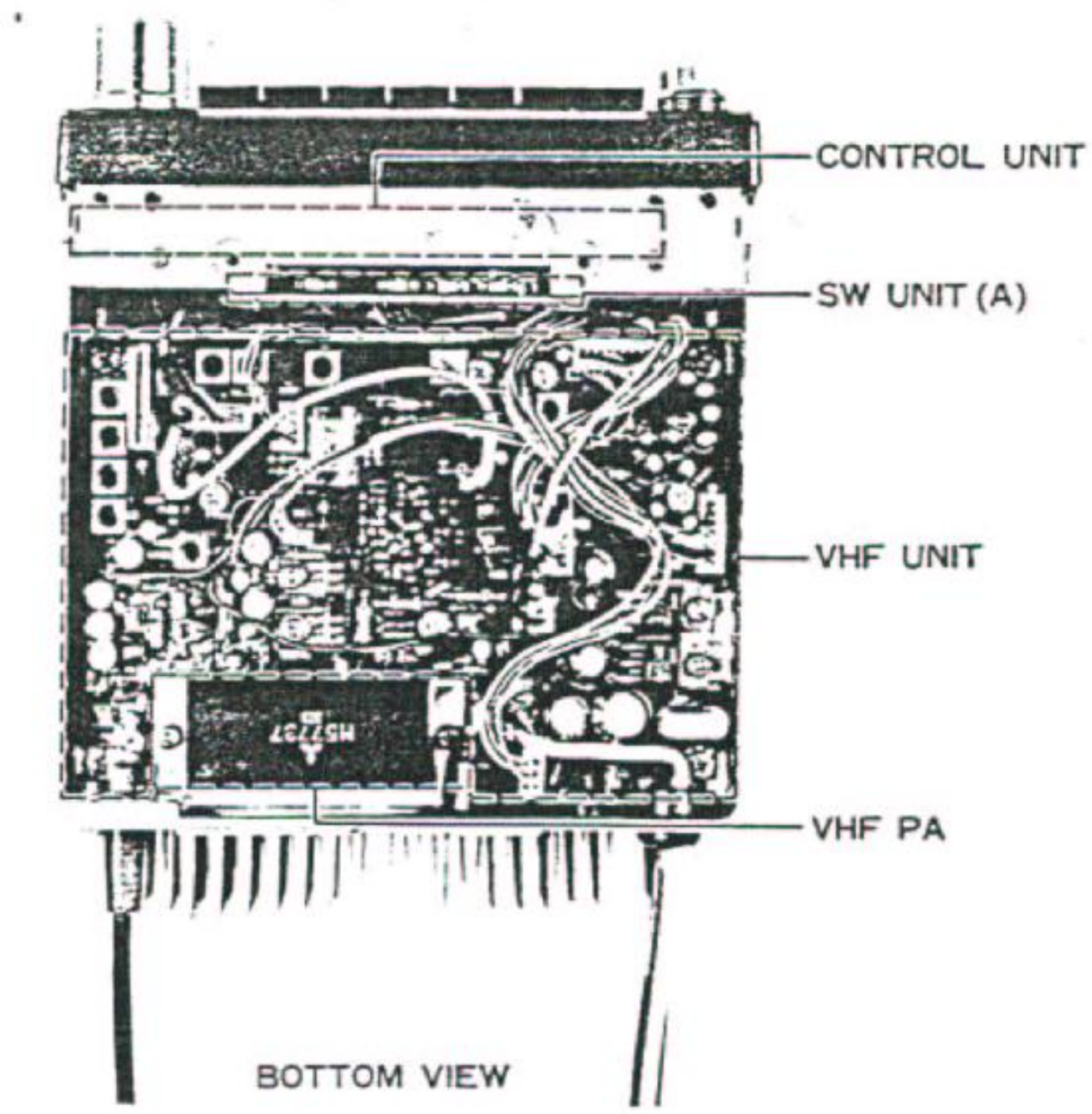

BOTTOM VIEW

PLL Unit (VHF)

VCV

1. With the dummy load connected to the VHF ANT connector, connect the DC voltmeter (10V scale) to TP3001.
2. Tune the transceiver to the top of the VHF band (for the model being aligned), close the PTT line and adjust TC3001 for 3.5V (or 6.5V for version G) while transmitting. Return to receive, and adjust TC3002 for the same voltage. Now retune the transceiver to the bottom of the band, and check for at least 1.2V on the meter, in transmit and receive.

VHF Unit - Transmitter Circuits

With the wattmeter and dummy load connected to the VHF ANT connector, close the PTT line when making all adjustments.

Interstage Coupling and CM Coupler

1. Connect the DC voltmeter (3V scale) to the cathode of D1028 (located on the small tab of the VHF Unit near the antenna terminal post).
2. With the transceiver tuned to the center of the VHF band, adjust TC1002 and then TC1003 for maximum power output on the wattmeter.
3. Adjust VR1010 (near D1028) for minimum indication on the voltmeter (less than 0.7V with 28W or more output).

VERSION	CENTER FREQUENCY (MHz)	
	VHF	UHF
A	146	445
B	145	435
C	146	435
D	145	435
E	146	435
G	149	435

Automatic Power Control (APC)

At the center of the band, adjust VR1006 for 25W output on the wattmeter when the LOW switch is undepressed, and then press the LOW switch and adjust VR1008 for 3W output.

PO Meter

After aligning the APC as above, adjust VR1007 so that just three segments of the S-meter show during low power transmission, and all segments show during high power transmission.

Automatic Final Protection (AFP)

With a DC Ammeter (10A scale) connected in series with the power supply, set the transceiver for high power, and remove all connections from the VHF ANT connector. Now close the PTT line and adjust VR1009, if necessary, for 4A maximum on the Ammeter.

If it was necessary to adjust the AFP circuit, repeat the APC, PO Meter and AFP procedures.

Frequency Calibration

With the frequency counter coupled to the VHF output and the transceiver tuned to the center of the band, close the PTT line and adjust TC3003 on the PLL Unit for the center frequency ±100 Hz on the counter.

Modulator Deviation

1. With the test equipment connected as shown below, set the audio generator for 25mV output at 1 kHz, and adjust VR3001 on the PLL Unit for ±4.5 kHz deviation.
2. Reduce the generator level to 2.5mV, and adjust VR3004 on the PLL Unit for ±3 kHz deviation.

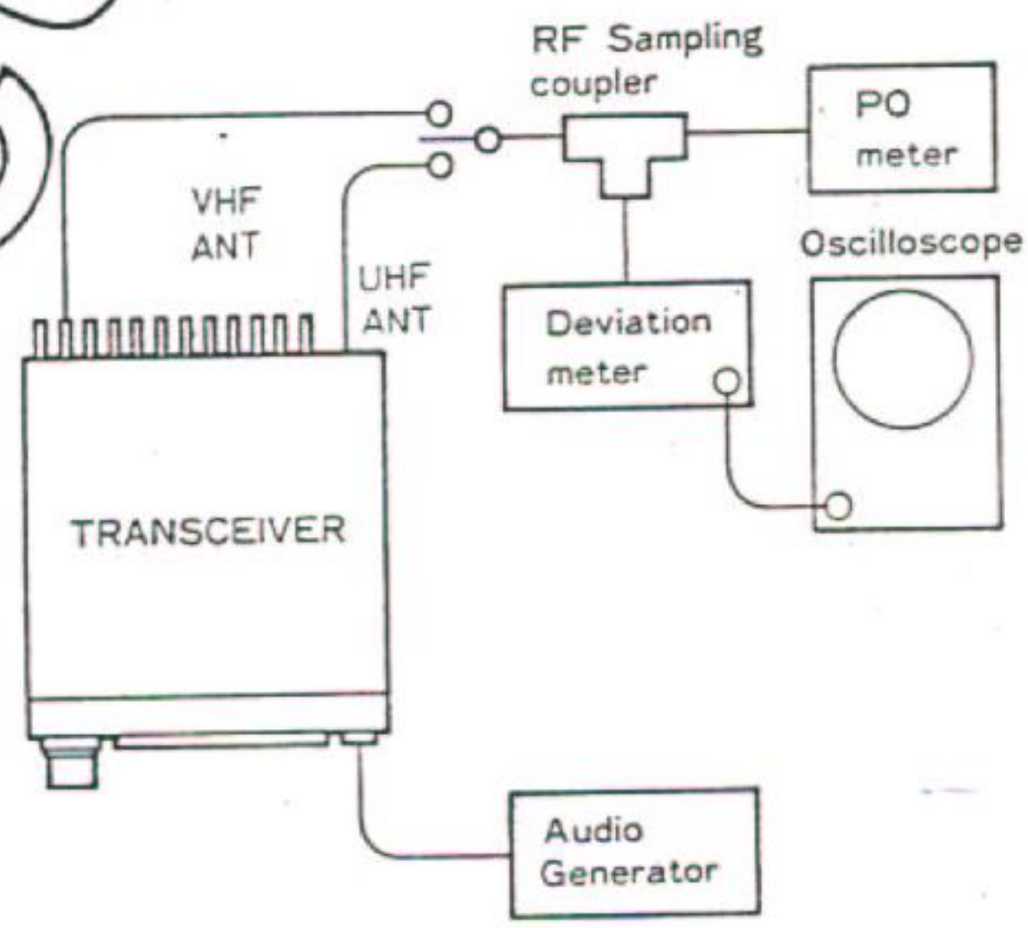

Auto Sales

VHF Unit - Receiver Circuits

RF and IF Resonant Circuits

1. Connect the SSG to the VHF ANT connector, and set for ±3.5 kHz deviation of a 1 kHz tone at the low band edge of the transceiver. Tune the transceiver to the same frequency, and adjust trimmer cap TC1001 and coils T1001 – T1008, in order, for maximum indication on the S-meter (set the SSG level as necessary to keep reading on scale).

2. Disconnect the SSG from the ANT connector and adjust transformer T1009 for maximum noise output.

3. Connect the SINADDER across the speaker terminals, and reconnect the SSG, with the same output as in step 1. Adjust transformers T1005 – T1007 for maximum SINAD.

4. Retune the transceiver and SSG to the high band edge, and adjust T1002 – T1004 for maximum S-meter indication.

S-meter Calibration

Tune the transceiver and SSG to band center, and set the SSG for 20dBu output of the same signal as used in the previous part. Adjust VR1002 so that all S-meter segments are just on.

DIM Brightness

Connect the DC voltmeter (15V scale) to pin 5 of jack J1004 on the VHF Unit, press the DIM button, and adjust VR1005 for 10V on the meter.

Beeper Volume

Adjust VR1004 to set the volume of the beeper as desired. This is normally set for maximum volume at the factory.

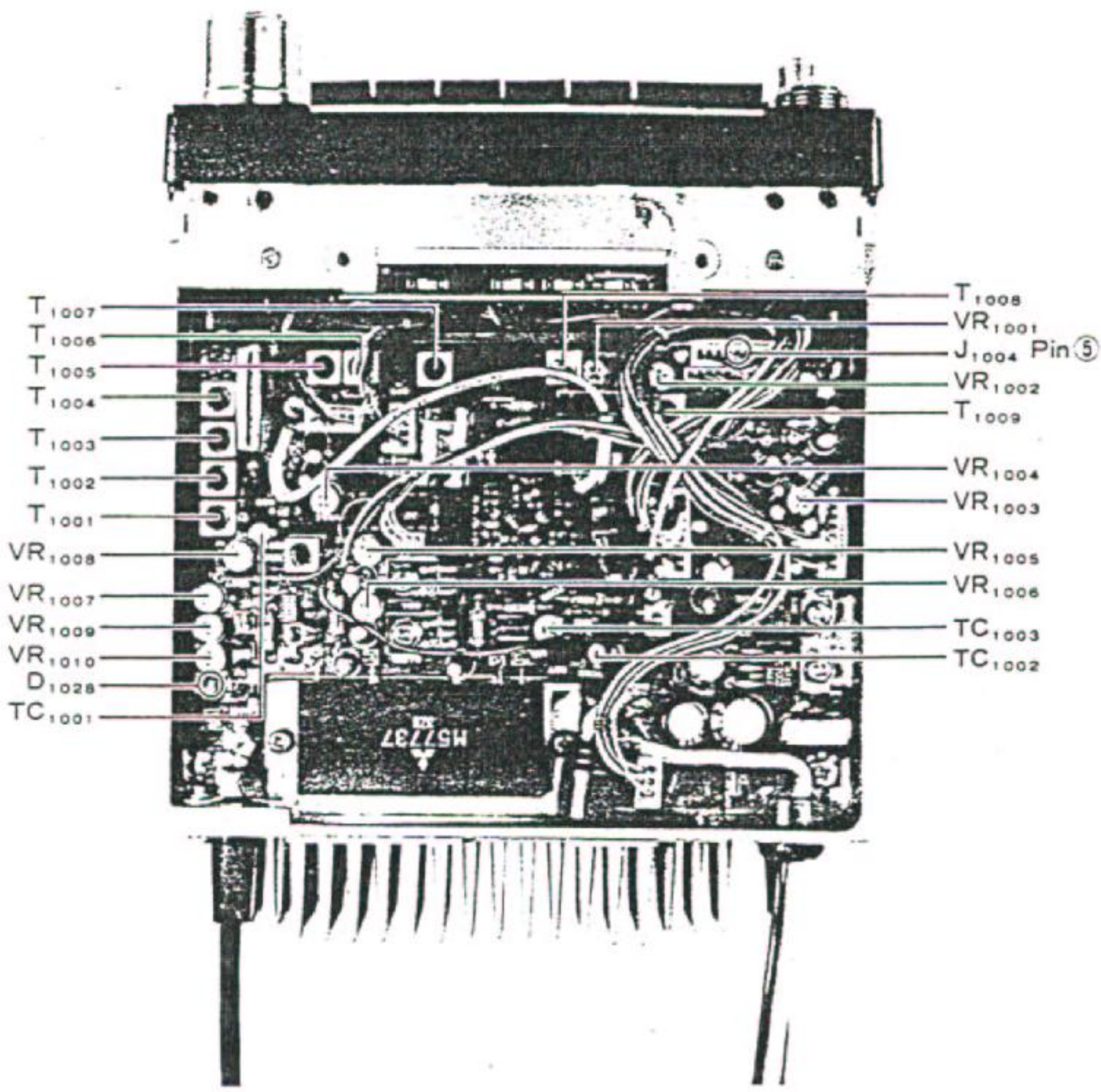

VHF UNIT Alignment Points

UHF Unit

UHF VCV

1. With the dummy load connected to the UHF ANT connector, connect the DC voltmeter (10V scale) to TP2001.

2. Tune the transceiver to the top of the UHF band (for the model being aligned), close the PTT line and adjust TC2002 for 6.0V while transmitting. Return to receive, and adjust TC3001 for the same voltage. Now retune the transceiver to the bottom of the band, and check for at least 1.5V on the meter in transmit, and at least 1.2V in receive.

UHF Unit - Transmitter Circuits

With the wattmeter and dummy load connected to the UHF ANT connector, close the PTT line when making all adjustments.

Interstage Coupling and CM Coupler

1. With the transceiver tuned to the center of the UHF band (see chart in previous section), adjust TC2006 for maximum power output on the wattmeter.

2. Connect the DC voltmeter (3V scale) to the center (wiper) of VR2002 (located on the small tab of the UHF Unit near the antenna terminal post). Rotate VR2002 fully clockwise, and then adjust VR2001 for minimum indication on the voltmeter.

UHF Automatic Power Control (APC)

At the center of the band, adjust VR2005 for 25W output on the wattmeter when the LOW switch is undepressed, and then press the LOW switch and adjust VR2004 for 3W output.

UHF PO Meter

After aligning the APC as above, adjust VR2003 so that just three segments of the S-meter show during low power transmission, and all segments show during high power transmission.

UHF Automatic Final Protection (AFP)

With a DC Ammeter (10A scale) connected in series with the power supply, set the transceiver for high power, and remove all connections from the UHF ANT connector. Now close the PTT line and adjust VR2002, if necessary, for 4A maximum on the Ammeter.

Repeat the UHF APC, PO Meter and AFP procedures.

Frequency Calibration

With the frequency counter coupled to the UHF output and the transceiver tuned to the center of the band, close the PTT line and adjust TC2003 for the center frequency ±100 Hz on the counter.

Modulator Deviation

With the test equipment connected as shown in the VHF section, set the audio generator for 25mV output at 1 kHz, and adjust VR3002 on the PLL Unit for ±4.5 kHz deviation.

UHF Unit - Receiver Circuits

RF and IF Resonant Circuits

1. Connect the SSG to the UHF ANT connector, and set for ±3.5 kHz deviation of a 1 kHz tone at the center of the band. Tune the transceiver to the same frequency, and adjust trimmer capacitors TC2004 and TC2005, and cavity resonators CV2001 and CV2002 for maximum indication on the S-meter (set the SSG level as necessary to keep reading on scale).

2. Connect the SINADDER across the speaker terminals, and readjust trimmers TC2004 and TC2005 for maximum SINAD.

3. Retune the transceiver and SSG to the low and then the high band edges, and slightly readjust CV2002 for maximum S-meter indication.

SAMPLE

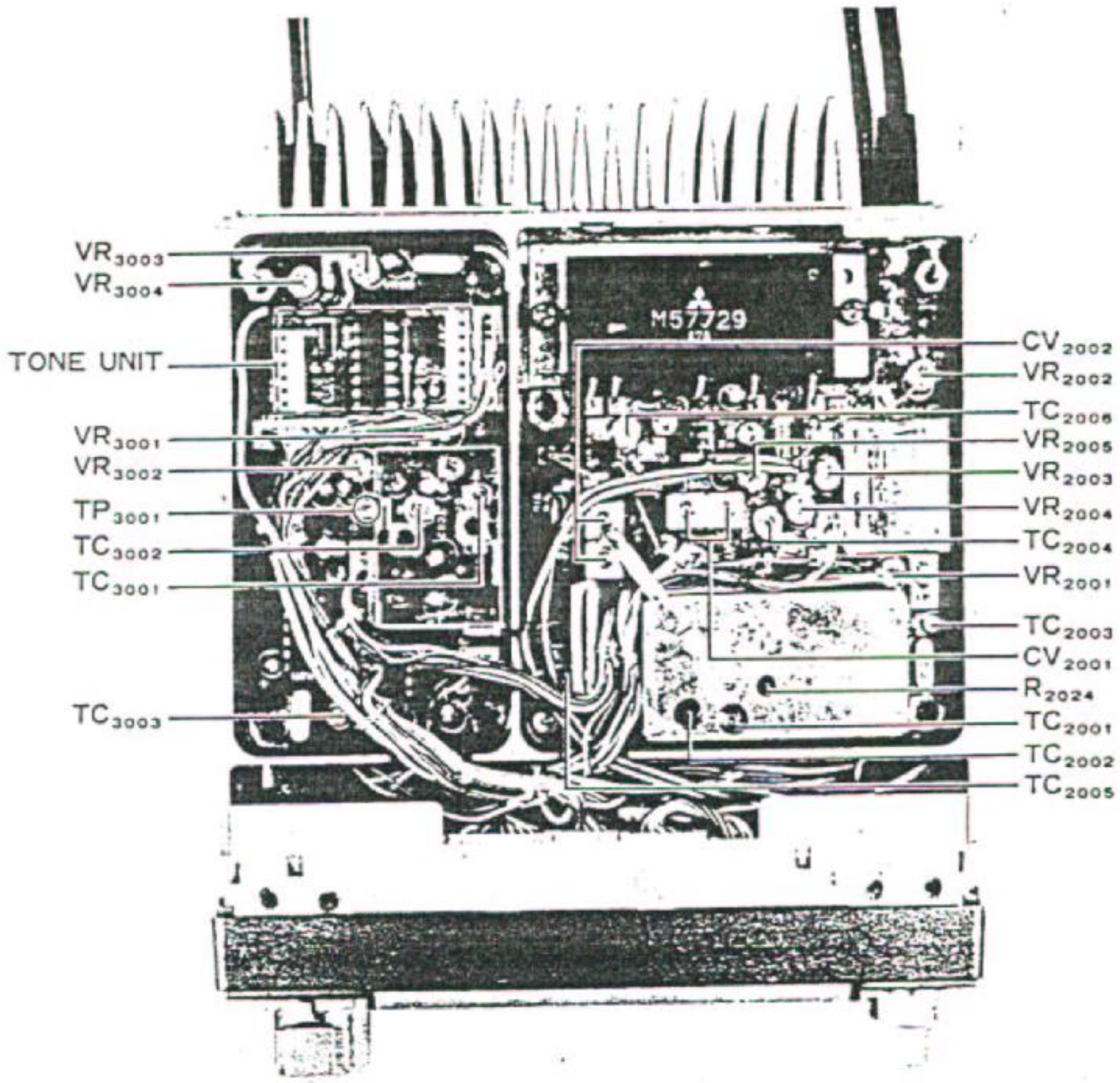

PLL UNIT, UHF UNIT Alignment Points

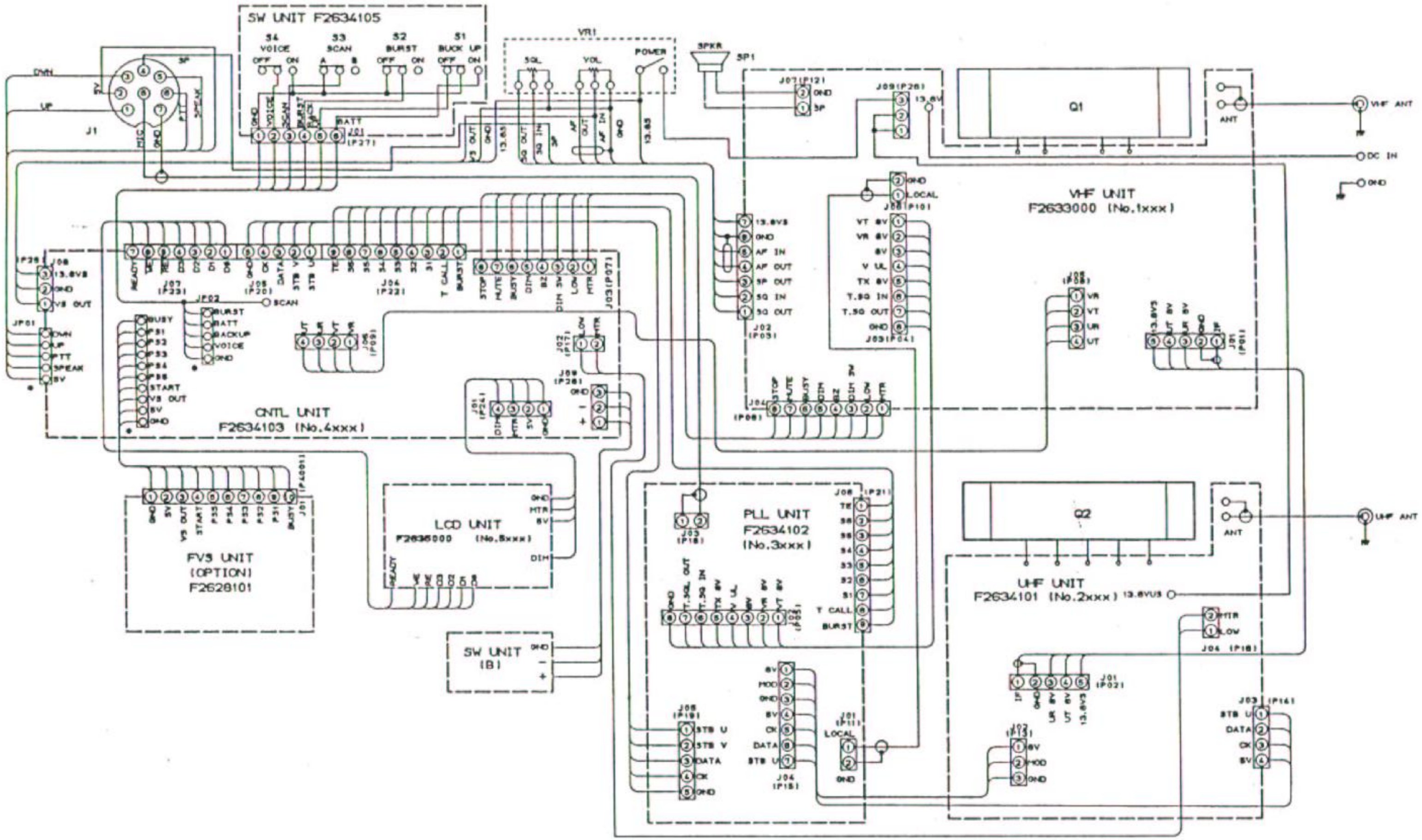

FT-2700R
CONNECTION DIAGRAM

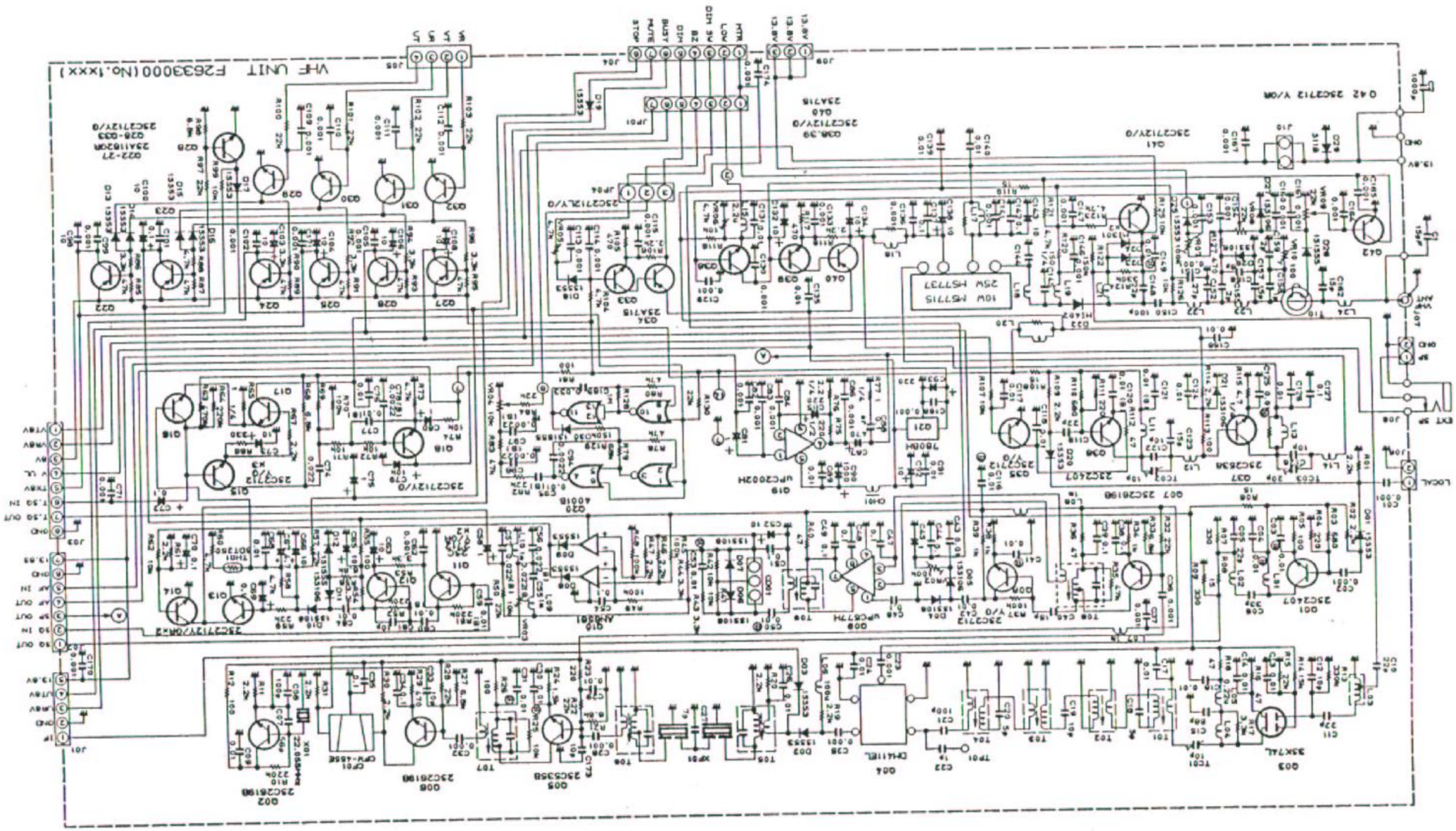

C144	5p	22p
C145	15p	

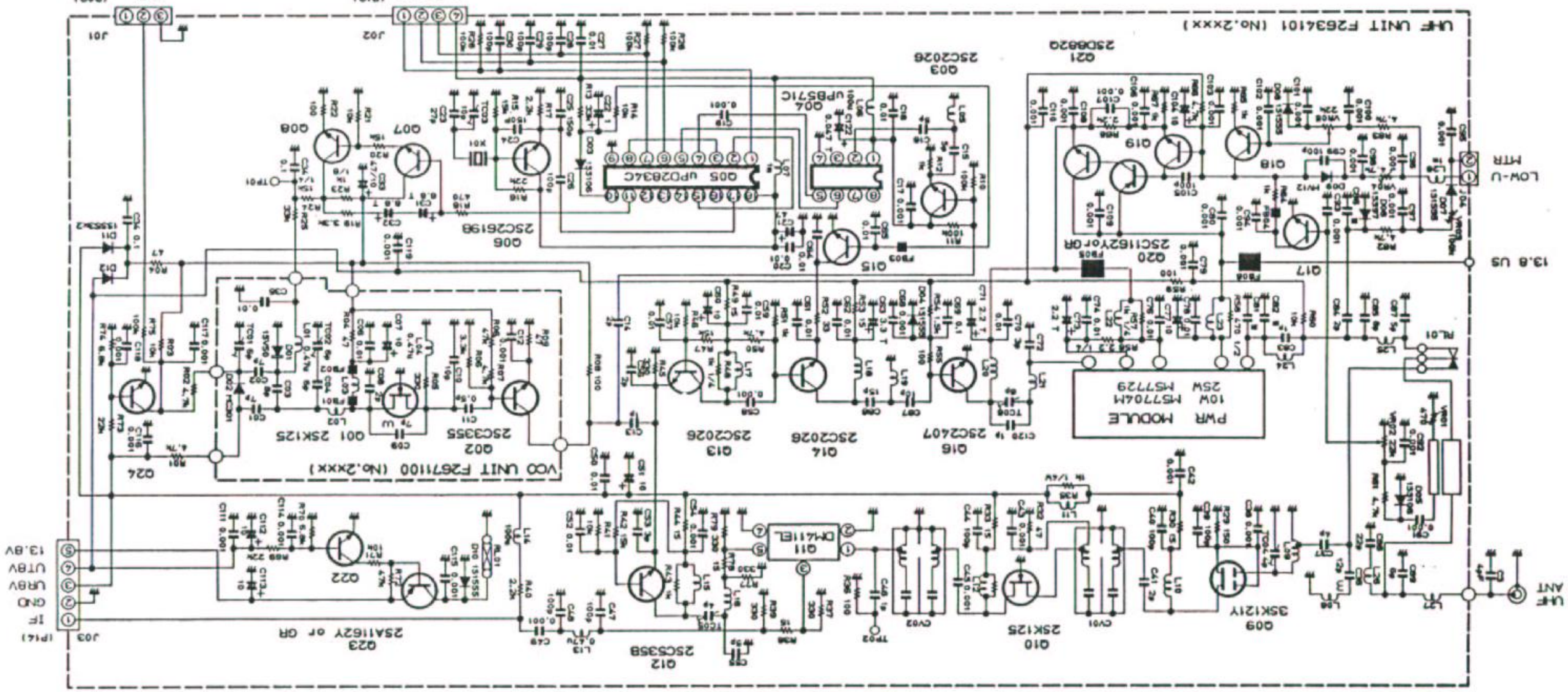
UHF UNIT F2634101 (No.2xxx)
VCO UNIT F2671100 (No.2xxx)
PWR MODULE
10W M5771O4M
25W M5771Z9
Q01 2SK125
Q02 2SC3355
Q03 2SC2026
Q04 UPB571C
Q05 UPD2834C
Q06 2SC2619B
Q07
Q08
Q09 3SK121Y
Q10 2SK125
Q11 DM4116L
Q12 2SC535B
Q13 2SC2026
Q14 2SC2026
Q15
Q16 2SC2407
Q17
Q18
Q19
Q20 2SC1162Y or GR
Q21 2SD882Q
Q22
Q23 2SA1162Y or GR
Q24
Q07 Q08 Q15
Q17 Q18 Q19
Q22 Q24
2SC2712Y or GR
CB1 CB2 CB6
10W 3p — 5p
25W 5p 5p 8p
LOW-U MTR
13.8 US
UHF ANT
13.8V
UTBV
URBV
GND
IF
5V
DATA
STB
GND
VCC

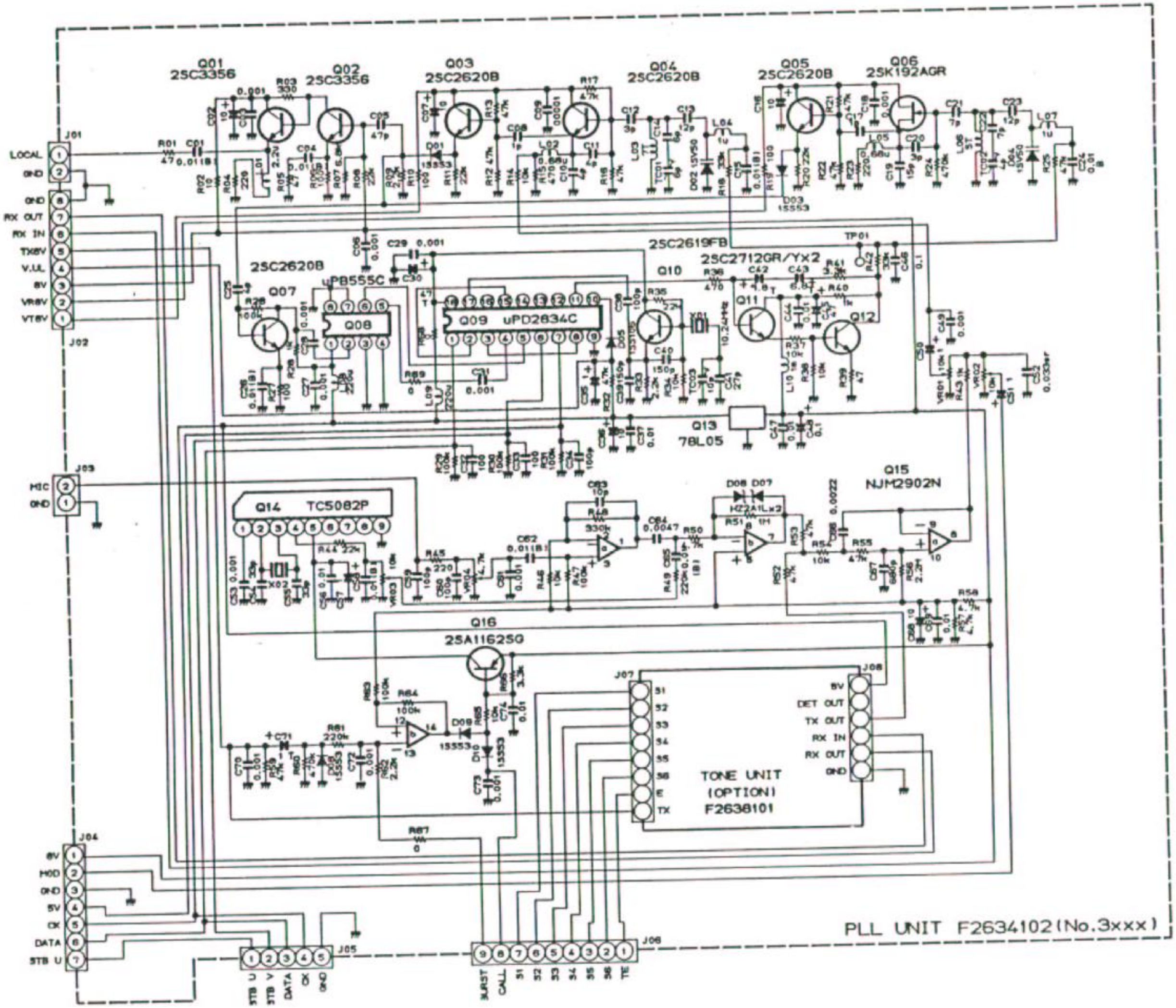
Q01 2SC3356
Q02 2SC3356
Q03 2SC2620B
Q04 2SC2620B
Q05 2SC2620B
Q06 2SK192AGR
Q07 2SC2620B
Q08 μPB555C
Q09 μPD2634C
Q10 2SC2619FB
Q11 2SC2712GR/YX2
Q12
Q13 78L05
Q14 TC5082P
Q15 NJM2902N
Q16 2SA1162SG
J01
LOCAL
GND
RX OUT
RX IN
TX8V
V.UL
8V
VR8V
VT8V
J02
J03
MIC
J04
8V
MOD
5V
CK
DATA
STB U
J05
STB U
STB V
DATA
CK
GND
J06
BURST
CALL
S1
S2
S3
S4
S5
S6
TE
J07
J08
DET OUT
TX OUT
TONE UNIT
(OPTION)
F2638101
PLL UNIT F2634102(No.3xxx)

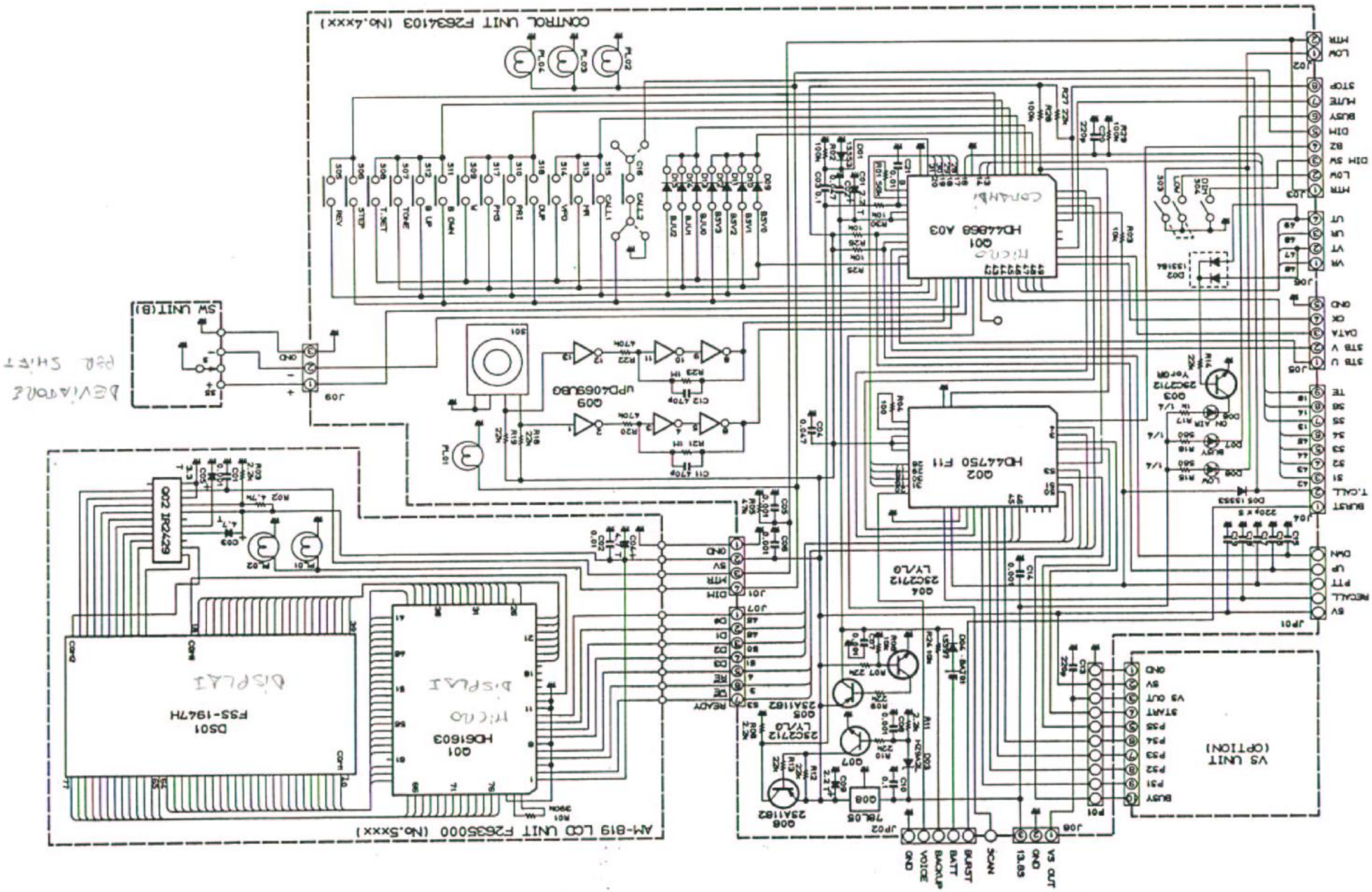
CONTROL UNIT F26341O3 (No.4xxx)
AM-819 LCD UNIT F2635000 (No.5xxx)
SW UNIT(B)
VS UNIT (OPTION)
DEVIATION PCB SHIFT
Q01 HD44868 A03
Q02 HD44750 F11
Q03 2SC2712 Y or GR
Q04 2SC2712 LY/LG
Q05 2SA1182
Q06 2SA1182
Q07 2SC2712 LY/LG
Q08 78L05
Q09 UPD4069UBG
Q01 HD61603
DS01 FSS-1947H
IC02 IRC429
PL01
PL02
PL03
PL04
JP01
JP02
J01
J02
J03
J04
J05
J06
J07
J08
J09
J10
P01
MIC
SCAN
BURST
BATT
BACKUP
VOICE
GND
13.8S
V3 OUT
DISPLAY
HICAO

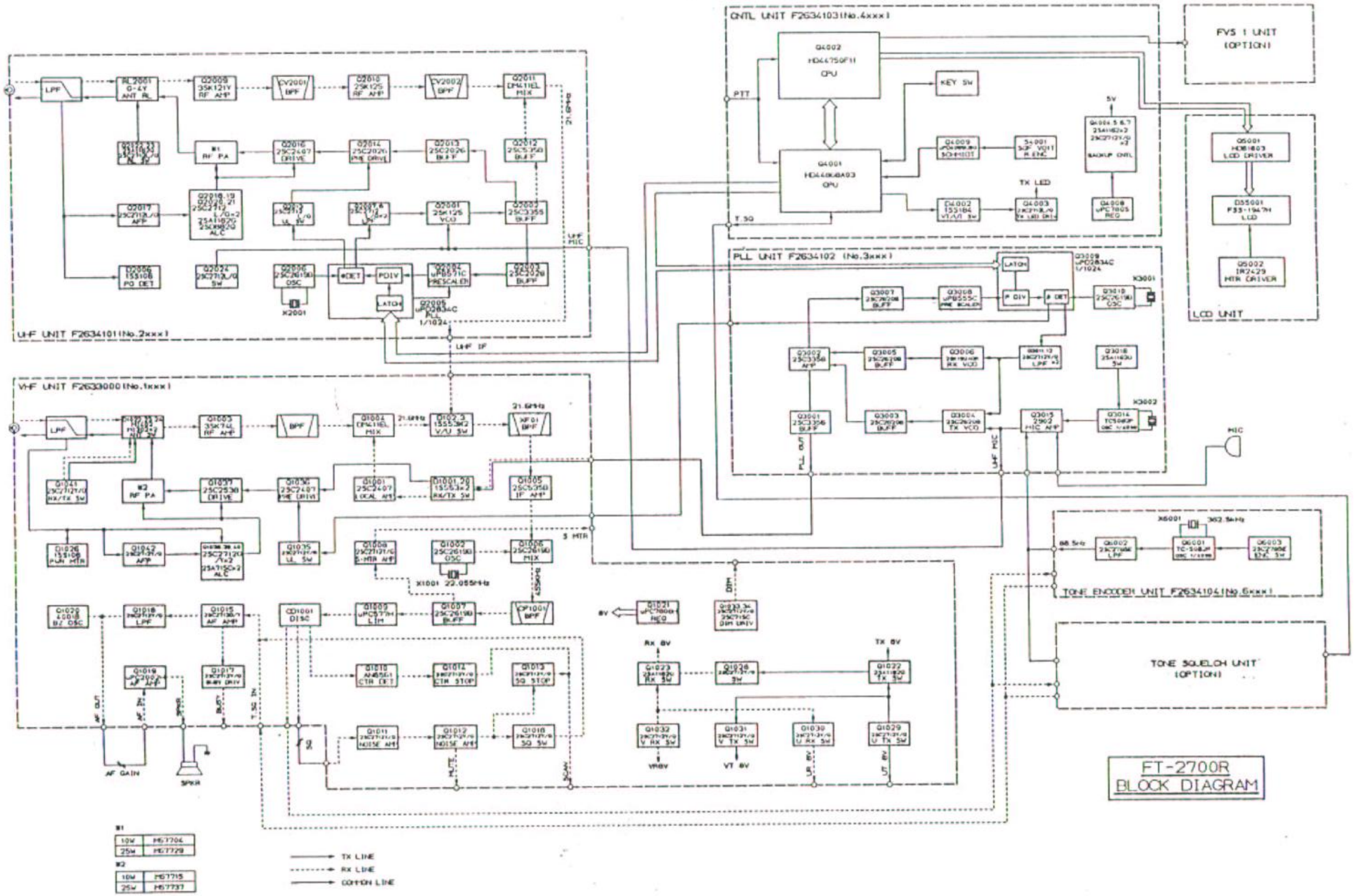

FT-2700R
BLOCK DIAGRAM

FT-2700RH PARTS LIST

MAIN CHASSIS

Symbol No.	Part No.	Name & Description
		POWER MODULES
Q1 (10W)	G1090251	M57715
Q1 (25W)	G1090509	M57737
Q2 (10W)	G1090225	M57704M
Q2 (25W)	G1090622	M57729
		POTENTIOMETER
VR1	J62800057	K12B1004-5N1211
		CAPACITORS
C3	K02172040	Ceramic 50WV 4pF CH (DD104CH040C50)
C1	K02175150	" " 15pF " (DD104CH150J50)
C2	K40129021	Electrolytic 16WV 1000μF (16R102S 13x16)
		RECEPTACLES
	P0090384	FM214-8SSPY MIC
P1 (with wire)	T9204774B	VHF ANT (Type M)
P2 (")	T9204687C	NJ58UNS W/RG-58/U UHF ANT (Type N)
P2 (")	T9204774B	UHF ANT (Type M)
	T9204868	DC POWER
		SPEAKER
SP1	M4090047	SS-77KYH
		KNOBS
	R3503500	24S MAIN
	R3107020	10S VOL
	R3107030	24WN SQL
	R3107100	- S +
	R3107040	REV, DIM, LOW
	R3107050	PMS, DUP
	R3107060	CALL, MR-VFO
	R3503570	STEP
	R3503571	TONE
	R3503572	T SET
	R3503573	M
	R3503574	PRI
	R3503590	MHz U/D

SWITCH A UNIT

Symbol No.	Part No.	Name & Description
	F2634105A	Printed Circuit Board
	C026345A	PCB with Components
		SWITCHES
S1–S4	N6090051	SSS-212
		CONNECTOR
J1	P0090414	S6B-PH

SWITCH B UNIT

Symbol No.	Part No.	Name & Description
	F2634106	Printed Circuit Board
	C026346A	PCB with Components
		SWITCH
S5	N6090042	SSS-313

VHF UNIT

Symbol No.	Part No.	Name & Description
	F2633000A	Printed Circuit Board
		PCB with Components
		w/o Power module
	C026330A	10W model
	C026330B	25W model
		ICs
Q1009	G1090072	μPC577H
Q1010	G1090500	AN6561
Q1019	G1090164	μPC2002H
Q1020	G1090027	MC14001BCP
Q1021	G1090294	μPC7808H
		FET
Q1003	G4800740L	2SK74L
		DBM MODULE
Q1004	Q9000288	DM411EL
		TRANSISTORS
Q1034, 1040	G3107150C	2SA715C
Q1022–1027	G3111620G	2SA1162GR (SG)
Q1005	G3305350B	2SC535B
Q1001, 1036	G3324070	2SC2407
Q1037	G3325380	2SC2538
Q1002, 1006, 1007	G3326190B	2SC2619B (FB)
Q1008, 1011, 1012, 1014–1018, 1028–1033, 1035, 1038 1039, 1041, 1042	G3327120Y /G	2SC2712Y/GR (LY/LG)
		DIODES
D1001–1003, 1008, 1009, 1013–1017 1019, 1020, 1025, 1031	G2090027	Si 1SS53
D1012, 1018, 1021 1028, 1030, 1032	G2015550	" 1S1555
D1029	G2090232	" S11B
D1023, 1024	G2090033	PIN M1301
D1022	G2090017	" MI402
D1004, 1005, 1026, 1027	G2090244	Schottky 1SS106
D1006, 1007, 1010, 1011	G2001880F	Ge 1S188FM
		CRYSTAL
X1001	H0102608	HC-49/T 22.055MHz
		CRYSTAL FILTER
XF1001	H1102087	21P15BU
		CERAMIC FILTER
CF1001	H3900200	CFW-455E
		CERAMIC DISCRIMINATOR
CD1001	H7900010	455D
		THERMISTOR
TH1001	G9090001	SDT-250S

*: 25W ▲: 10W

		RESISTORS			
R1065, 1077	J02245010	Carbon Film 1/4W SJ	1Ω		
R1076	J02245229	" " " "	2.2Ω		
R1115	J02245479	" " " "	4.7Ω		
R1120	J02245151	" " " "	150Ω		
R1126	J01215103	" " 1/8W TJ	10kΩ		
R1075	J10276221	" Composition 1/2W	220ΩGK		
R1006, 1008, 1108, 1119, 1129	J24205150	Chip RMC-1/10T-150J	15Ω		
R1016, 1018, 1036, 1040, 1112	J24205470	" " 470J	47Ω		
R1005, 1012, 1026 1055, 1081, 1113	J24205101	" " 101J	100Ω		
R1004, 1023, 1111	J24205221	" " 221J	220Ω		
R1007, 1009, 1066	J24205331	" " 331J	330Ω		
R1029, 1034, 1105, 1117, 1127	J24205471	" " 471J	470Ω		
R1002, 1110	J24205681	" " 681J	680Ω		
R1038, 1039	J24205102	" " 102J	1kΩ		
R1024, 1058	J24205152	" " 152J	1.5kΩ		
R1001, 1002, 1011, 1019, 1020, 1030, 1031, 1046, 1047, 1061, 1067, 1098, 1106, 1109, 1114, 1118	J24205222	" " 222J	2.2kΩ		
R1017, 1043, 1044, 1053, 1054, 1086, 1088, 1090, 1092, 1094, 1096	J24205332	" " 332J	3.3kΩ		
R1060, 1073, 1104, 1121, 1123	J24205472	" " 472J	4.7kΩ		
R1021, 1027, 1033, 1056, 1068	J24205682	" " 682J	6.8kΩ		
R1025, 1041, 1042, 1062, 1071, 1072, 1074, 1099, 1107, 1116, 1125	J24205103	" " 103J	10kΩ		
R1014	J24205153	" " 153J	15kΩ		
R1015, 1022, 1028, 1032, 1050, 1057, 1082, 1084, 1097, 1100–1103, 1130	J24205223	" " 223J	22kΩ		
R1035, 1078, 1080, 1083, 1085, 1087, 1089, 1091, 1093, 1095	J24205473	" " 473J	47kΩ		
R1037, 1045, 1048, 1049, 1069, 1070	J24205104	" " 104J	100kΩ		
R1122	J24205154	" " 154J	150kΩ		
R1010, 1051, 1052, 1064, 1068	J24205224	" " 224J	220kΩ		
R1013, 1124	J24205334	" " 334J	330kΩ		
R1063	J24205474	" " 474J	470kΩ		
R1128	J24205105	" " 105J	1MΩ		

		POTENTIOMETERS	
VR1010	J51745101	H0651A005-100B	100ΩB
VR1001	J51745102	H0651A007-1KB	1kΩB
VR1005, 1006	J51745472	H0651A011-4.7KB	4.7kΩB
VR1003, 1004	J51745103	H0651A013-10KB	10kΩB
VR1008, 1009	J51745223	H0651A015-22KB	22kΩB
VR1002, 1007	J51745104	H0651A020-100KB	100kΩB
		CAPACITORS	
C1173	K02173100	Ceramic 50WV 10pF CH (DD104CH100D50)	
C1163	K02175150	" " 15pF (DD104B102K50)	
C1022, 1158	K22170202	Chip 50WV 1pF CH (C2012CH1H010CFA)	
C1155, 1159	K22170203	" " 2pF " (C2012CH1H020CFA)	
C1018, 1020, 1144▲	K22170206	" " 5pF " (C2012CH1H050CFA)	
C1027	K22170208	" " 7pF " (C2012CH1H070DFA)	
C1156	K22170209	" " 8pF " (C2012CH1H080DFA)	
C1012, 1019, 1033, 1061, 1122, 1128,	K22170211	" " 10pF " C2012CH1H100DFA)	
C1040, 1123, 1145▲, 1157, 1162	K22170215	" " 15pF " (C2012CH1H150JFA)	
C1005, 1010, 1011, 1119, 1145,*1148	K22170219	" " 22pF " (C2012CH1H220JFA)	
C1152	K22170221	" " 27pF " (C2012CH1H270JFA)	
C1006	K22170223	" " 33pF " (C2012CH1H330JFA)	
C1007	K22170229	" " 56pF " (C2012CH1H560JFA)	
C1015	K22170231	" " 68pF " (C2012CH1H680JFA)	
C1008, 1021, 1150	K22170235	" " 100pF " (C2012CH1H101JFA)	
C1001, 1002, 1023, 1025, 1028, 1032, 1036, 1062, 1071, 1082–1084, 1086, 1099, 1102, 1005, 1109–1115, 1129, 1130, 1133, 1136, 1141, 1146, 1147, 1151, 1153, 1154, 1160, 1161, 1164, 1165, 1167, 1168, 1170, 1171	K22170805	" " 0.001μF B (C2012B1H102MFA)	
C1078, 1094, 1096 1097	K22170809	" " 0.0022μF B (C2012B1H222MFA)	
C1003, 1004, 1030, 1031, 1041, 1050, 1053, 1059, 1060, 1064, 1077, 1095, 1116, 1120, 1121, 1125, 1149	K22170817	" " 0.01μF " (C2012B1H103MFA)	
C1009, 1013, 1014, 1016, 1017, 1024, 1026, 1029, 1042, 1043, 1068, 1076, 1089, 1091, 1117, 1118, 1124, 1126, 1131, 1135, 1139 1140, 1166	K22171004	" " 0.01μF B (C2012F1H103ZFA)	

*: 25W ▲: 10W

C1055, 1056, 1074	K22140807	" 25WV 0.022μF B (C2012B1E223MFA)
C1057, 1169	K22141901	" " 0.033μF D (C3216D1E333MFA)
C1034, 1035, 1037–1039, 1044, 1046–1049, 1051, 1054 1101, 1127, 1137 1142	K22141904	" " 0.1μF D (C3216D1E104MFA)
C1174	K10176102	Ceramic 50WV 0.001μF B (DD104B102K50)
C1088	K19149025	Semiconductor Ceramic 0.1μF (UAT10X104K-L45AE)
C1070, 1072	K40179002	Electrolytic 50WV 0.1μF (ECE-A1HK 0R1)
C1045, 1058, 1075 1080, 1081, 1092	K40179001	" " 1μF (ECE-A1HK010)
C1066, 1067	K40169005	" 35WV 4.7μF (ECE-A1VK4R7)
C1052, 1063, 1065 1079, 1098, 1100, 1103, 1104, 1106, 1108, 1132, 1134, 1138, 1143	K40129012	" 16WV 10μF (ECE-A1CK100)
C1085, 1093	K40109007	" 10WV 220μF (10RE220)
C1087	K40129031	" 16WV 470μF (16RC470)
C1090	K40129021	" " 1000μF (16R102S)
C1073	K72080002	Tantalum 6.3WV 4.7μF (F950J475MA1)
		TRIMMER CAPACITORS
TC1001, 1002	K91000101	ECR-GA010D30 10 pF
TC1003	K91000029	ECV-1ZW20X53T 20 pF
		INDUCTORS
L1001, 1002, 1011	L0020678	
L1003	L0021455	
L1004	L0020724	
L1012	L0020852	
L1013, 1016, 1020	L1020469	
L1014, 1022–1024	L0020679	
L1017	L1020663	
L1018	L0021359	
L1019	L0021458	
L1021	L0021457	
L1005	L1190188	LAL03NA-R22M 0.22μH
L1006	L1190016	FL5H-101K 100μH
L1007–1010	L1190189	LAL03NA-102K 1 mH
CH1001	L2030067	FR14/7/52001F
		TRANSFORMERS
T1001–1004	L0020345	
T1005–1007	L0021456	
T1008	L0021468	
T1009	L0021469	
T1010	L0020335A	

		CONNECTORS
J1001	P0090372	5703-05-CPB
J1002	P0090374	5703-07CPB
J1003-1004	P0090375	5703-08CPB
J1005	P0090371	5703-04CPB
J1006	P0090369	5703-02CPB
J1007	P0090429	3022-02A
J1009	P0090352	3022-03A
J1010	P0090351	3094-02A
J1008	P1090350	S-G8035
JP1001 (with wire)	T9204866	(JP1004, 1005)
JP1002 (")	T94262111	
JP1003 (")	T94448101	
		TERMINAL POSTS
	Q5000016	TP-E
	R7066320	Fiber washer
PLL UNIT		
Symbol No.	Part No.	Name & Description
	F2634102A	Printed Circuit Board
		PCB with components
	C026342A	5kHz steps, 1800Hz Tone Burst
	C026342K	5kHz steps, 1750Hz Tone Burst
	C026342D	12.5kHz steps, 1750Hz Tone Burst
	C026342T	10kHz steps, w/o Tone Burst
		ICs
Q3008	G1090470	μPB555C
Q3009	G1090610	μPD2834C
Q3013	G1090084	μPC78L05
Q3014	G1090239	TC5082P
Q3015	G1090220	MLM2902P
		FET
Q3006	G3801921G	2SK192AGR
		TRANSISTORS
Q3016	G3111620G	2SA1162GR (SG)
Q3010	G3326190B	2SC2619B (FB)
Q3003–3005, 3007	G3326200B	2SC2620B (HB)
Q3011, 3012	G3327120Y /G	2SC2712Y/GR (LY/LG)
Q3001, 3002	G3333560	2SC3356 (R22)
		DIODES
D3001, 3003, 3008–3010	G2090027	Si 1SS53
D3002, 3004	G2090023	Varactor 1SV50
D3005	G2090244	Schottky 1SS106
D3006, 3007	G2090307	Zener HZ2ALL
		CRYSTALS
X3001 (5kHz steps)	H0102585	HC-18/T 5.12MHz
X3001 (10kHz steps)	H0102587	" 10.24MHz
X3001 (12.5kHz steps)	H0102586	" 12.8MHz
X3002 (1750Hz tone)	H0101982	" 7.3728MHz
X3002 (1800Hz ")	H0101983	" 7.168MHz

		RESISTORS	
R3067-3069	J24205000	Chip RMC 1/10T-000J (Jumper)	0Ω
R3001, 3005, 3039	J24205470	" " 470J	47Ω
R3002, 3006, 3010 3019, 3027	J24205101	" " 101J	100Ω
R3004, 3023, 3045	J24205221	" " 221J	220Ω
R3003	J24205331	" " 331J	330Ω
R3015, 3036	J24205471	" " 471J	470Ω
R3028, 3040, 3043	J24205102	" " 102J	1kΩ
R3009, 3033, 3062	J24205222	" " 222J	2.2kΩ
R3041, 3066	J24205332	" " 332J	3.3kΩ
R3050, 3057, 3058	J24205472	" " 472J	4.7kΩ
R3007	J24205682	" " 682J	6.8kΩ
R3014, 3034, 3038 3046, 3054, 3065	J24205103	" " 103J	10kΩ
R3037, 3042(○,△)	J24205153	" " 153J	15kΩ
R3008, 3011, 3020, 3035, 3044	J24205223	223J	22kΩ
R3018, 3025, 3042(•)	J24205333	" " 333J	33kΩ
R3012, 3013, 3016, 3017, 3021, 3022, 3032, 3052, 3053, 3055, 3059	J24205473	" " 473J	47kΩ
R3026, 3029–3031, 3047, 3063, 3064	J24205104	" " 104J	100kΩ
R3049, 3061	J24205224	" " 224J	220kΩ
R3048	J24205334	" " 334J	330kΩ
R3024, 3060	J24205474	" " 474J	470kΩ
R3051	J24205105	" " 105J	1MΩ
R3056	J24205225	" " 225J	22MΩ
		POTENTIOMETERS	
VR3004	J51745472	H0651A011-4.7kB	4.7kΩB
VR3001–3003	J51745103	H0651A013-10kB	10kΩB
		CAPACITORS	
C3008, 3017	K22170202	Chip 50WV (C2012CH1H010CFA)	1pF CH
C3012, 3020	K22170304	" " (C2012UJ1H030CFA)	3pF UJ
C3011, 3014, 3025	K22170205	" " (C2012CH1H040CFA)	4pF CH
	K22170207	" " (C2012CH1H060DFA)	6PF "
C3022	K22170208	" " (C2012CH1H070DFA)	7pF "
C3021, 3063	K22170211	" " (C2012CH1H100DFA)	10pF "
C3013	K22170213	" " (C2012CH1H120JFA)	12pF "
C3019	K22170313	" " (C2012UJ1H120JFA)	12pF UJ
C3010	K22170315	" " (C2012UJ1H150TFA)	15pF UJ
C3023	K22170217	" " (C2012CH1H180JFA)	18pF CH
C3041	K22170221	" " (C2012CH1H270JFA)	27pF "
C3054, 3055	K22170223	" " (C2012CH1H330JFA)	33pF "
C3005	K22170227	" " (C2012CH1H470JFA)	47pF "
C3032–3034, 3038 3059, 3060	K22170235	" " (C2012CH1H101JFA)	100pF "
C3039, 3040	K22170239	" " (C2012CH1H151JFA)	150pF "
C3067	K22170803	" " (C2012B1H681MFA)	680pF B
C3003, 3006, 3009, 3018, 3027–3029, 3031, 3049, 3053, 3061, 3072, 3073	K22170805	" " (C2012B1H102MFA)	0.001μF "
C3066	K22170809	" " (C2012B1H222MFA)	0.0022μF "
C3062, 3064	K22170813	" " (C2012B1H472MFA)	0.0047μF "
C3001, 3015, 3024, 3026, 3070	K22170817	" " (C2012B1H103MFA)	0.01μF "
C3004, 3037, 3044, 3047, 3056, 3058, 3065, 3069, 3074	K22171004	" " (C2012F1H103ZFA)	0.01μF F
C3046	K22141904	" 25WV (C3216D1E104MFA)	0.1μF D
C3052	K19149019	Semiconductor Ceramic (UAT08 x 333K-L45AE)	0.033μF
C3048	K40179002	Electrolytic 50WV (ECE-A1HK0R1)	0.1μF
C3035, 3050, 3051 3057	K40179001	" " (ECE-A1HK010)	1μF
C3002, 3007, 3016 3036, 3068	K40129012	" 16WV (ECE-A1CK100)	10μF
C3045	K40109002	" 10WV (10RE47)	47μF
C3071	K70140007	Tantalum 25WV (489D105x0025A1)	1μF
C3042, 3043	K70120007	" 16WV (489D685x0016C1)	6.8μF
C3030	K70100005	" 10WV (489D476x0010D1)	47μF
		TRIMMER CAPACITORS	
TC3001,3002	K91000059	ECV-1ZW04x53T	4 pF
TC3003	K91000028	ECV-1ZW10x53T	10 pF
		INDUCTORS	
L3003,3006	L0020359A		
L3001	L1190008	FL4H-2R2M	2.2μH
L3002,3005	L1190004	FL4H-R68M	0.68μH
L3004,3007	L1190005	FL4H-1R0M	1μH
L3008,3009	L1190024	FL5H-221K	220μH
L3010	L1190017	FL5H-102K	1 mH
		TERMINAL POSTS	
	Q5000016	TP-E	
		CONNECTORS	
J3001, 3003	P0090369	5703-02CPB	
J3002	P0090375	5703-08CPB	
J3004	P0090374	5703-07CPB	

•: (A.D.E) 5 kHz steps △: (F) 10 kHz steps ○: B.C.G 12.5 kHz steps

J3005	P0090372	5703-05CPB
J3006	P0090376	5703-09CPB
J3007	P1090250	3024-08CH
J3008	P1090419	3024-06CH
	R0106540	Shield Case
	R0106620	" (Rear)
UHF UNIT		
Symbol No.	Part No.	Name & Description
	F2634101A	Printed Circuit Board
		PCB with components (w/VCO UNIT)
	C026341C	12.5kHz steps, 10W
	C026341D	12.5kHz steps, 25W
	C026341A	10kHz steps, 10W
	C026341B	10kHz steps, 25W
★★★★★ VCO		UNIT ★★★★★
	F2671100	VCO UNIT PCB
		ICs
Q2004	G1090498	μPB571C
Q2005	G1090610	μPD2834C
		FETs
Q2001*, 2010	G3801250	2SK125
Q2009	G4801210Y	3SK121Y
		DBM MODULE
Q2011	Q9000288	DM411EL
		TRANSISTORS
Q2020	G3111620Y /G	2SA1162Y/GR (SY/SG)
Q2012	G3305350B	2SC535B
Q2003, 2013, 2014	G3320260	2SC2026
Q2016	G3324070	2SC2407
Q2006	G3326190B	2SC2619B (FB)
Q2007, 2008, 2015, 2017–2019, 2022, 2024	G3327120Y /G	2SC2712Y/GR (LY/LG)
Q2002*	G3333550	2SC3355
Q2021	G3408820Q	2SD882Q
		DIODE
D2004, 2007, 2008–2012	G2015550	Si 1S1555
D2002*	G2090044	" MC301
D2006	G2090118	Schottky 1SS97
D2003, 2005	G2090244	Schottky 1SS106
D2001*	G2090023	Varactor 1SV50
		CRYSTAL
X2001 (10kHz steps)	H0102609	HC-18/T 10.24MHz
X2001 (12.5kHz steps)	H0102610	" 12.8MHz
		CAVITIES
CV2001, 2002	Q90000114	CV-441B
		RESISTORS
R2056	J02245229	Carbon Film 1/4W 2.2Ω SJ
R2080	J01215471	" 1/8W 470Ω TJ
R2023	J01215102	" 1/4W 1kΩ SJ
R2024	J02245153	" 1/4W 15kΩ SJ

R2030, 2033, 2038, 2049, 2044, 2053, 2078	J24205150 J24205150	Chip RMC 1/10T-150J 15Ω
R2052	J24205330	" " 330J 33Ω
R2004, 2009*, 2032	J24205470	" " 470J 47Ω
R2008, 2022, 2036, 2055, 2059	J24205101	" " 101J 100Ω
R2029	J24205151	" " 151J 150Ω
R2005*, 2037, 2039 2045, 2077, 2079	J24205331	" " 331J 330Ω
R2018	J24205471	471J 470Ω
R2012, 2043, 2051 2064, 2065, 2067	J24205102	" " 102J 1kΩ
R2054	J24205152	" " 152J 1.5kΩ
R2017, 2040, 2068	J24205222	" " 222J 2.2kΩ
R2006*, 2019	J24205332	" " 332J 3.3kΩ
R2001, 2002, 2007*, 2050, 2061–2063 2066, 2076*	J24205472	" " 472J 4.7kΩ
R2070, 2074	J24205682	682J 6.8kΩ
R2003, 2014, 2021, 2041, 2046, 2060, 2071	J24205103	" " 103J 10kΩ
R2015, 2020, 2042, 2047	J24205153	" " 153J 15kΩ
R2016, 2069, 2073	J24205223	" " 223J 22kΩ
R2013, 2025	J24205333	" " 333J 33kΩ
R2072	J24205473	" " 473J 47kΩ
R2010, 2011, 2026–2028, 2075	J24205104	" " 104J 100kΩ
		POTENTIOMETERS
VR2001	J51745471	H0651A005-470B 470ΩB
VR2004	J51745472	H0651A011-4.7KB 4.7kΩB
VR2002, 2005	J51745223	H0651A015-22KB 22kΩB
VR2003	J51745104	H0651A019-100KB 100kΩB
		CAPACITORS
C2083▲, 2120	K02179001	Ceramic 50WV 1pF CH (DD104CK010C50)
C2014	K02172020	" " 2pF " (DD104CK020C50)
C2011*	K22170201	Chip 50WV 0.5pF CH (C2012CH1H0R5CFA)
C2013, 2046, 2083*	K22170202	" " 1pF " (2012CH1H010CFA)
C2041, 2045, 2056, 2084	K22170203	" " 2pF " (C2012CH1H020CFA)
C2088*	K22170303	" " 2pF UJ (C2012UJ1H020CFA)
C2036, 2053, 2081▲	K22170204	" " 3pF CH (C2012CH1H030CFA)
C2037	K22170205	" " 4pF " (C2012CH1H040CFA)
C2015, 2016, 2055 2066, 2081* 2082*, 2086▲	K22170206	" " 5pF " (C2012CH1H050CFA)
C2004*, 2087, 2089	K22170207	" " 6pF " (C2012CH1H060DFA)
C2001*, 2002*, 2009*	K22170208	" " 7pF " (C2012CH1H070DFA)
C2003*, 2085, 2086*	K2217209	" " 8pF (C2012CH1H080DFA) "
C2067	K22170211	" " 10pF " (C2012CH1H100DFA)
C2010*, 2072	K22170311	" " 10pF UJ (C2012UJ1H100DFA)

Marked * components on the VCO UNIT

C2088	K22170219	" " 15pF CH (C2012CH1H220JFA)
C2023	K22170223	" " 33pF CH (C2012CH1H330JFA)
C2026, 2038–2030, 2039, 2040, 2044, 2047, 2048, 2099, 2105	K22170235	" " 100pF " (C2012CH1H101JFA)
C2024, 2025	K22170239	" " 150pF " (C2012CH1H151JFA)
C2012*, 2017, 2019 2042, 2043, 2049, 2054, 2058, 2068, 2079–2091–2098, 2100–2103, 2106–2111, 2114–2119 2119	K22170805	" " 0.001μF B (C2012B1H102MFA)
C2005, 2006, 2018, 2020, 2027, 2035*, 2038, 2050, 2052, 2057, 2059, 2061, 2062, 2064, 2065, 2070, 2074, 2076, 2078, 2080	K44170817	" " " 0.01μF (C2012B1H103MFA)
C2034, 2069	K22141904	" 25WV D 0.1μF (C3216D1E104MFA)
C2022	K40179001	Electrolytic 50WV 1μF (ECE-A1HK010)
C2051, 2060, 2077, 2014, 2112, 2113	K40129012	" 16WV 10μF (ECE-A1CK100)
C2033	K40109002	" 10WV 47μF (10RE47)
C2071, 2073	K72120002	Tantalum 16WV 2.2μF (F951C225MA1)
C2063	K72100002	" 10WV 3.3μF (F951A335MA1)
C2031, 2032	K70120007	" 16WV 6.8μF (48PD685x0016C1)
C2021	K70100003	10WV 10μF (489D106x0010B1)
C2007*	K70100005	" " 47μF (489D476x0010D1)
C2122	K70160001	" 35WV 0.047μF (MDST473F)
		TRIMMER CAPACITORS
TC2004, 2005	K91000059	ECV-1ZW04x53T 4pF
TC2001*, 2002*, 2006	K91000055	ECV-1ZW06x53T 6pF
TC2003	K91000028	ECV-1ZW10x53T 10pF
		INDUCTORS
L2002*	L0190121	
L2003*	L0021520	
L2005, 2015, 2018	L0020852	
L2026	L0020342	
L2009	L0021262	
L2008, 2010	L0020678	
L2011, 2016, 2017, 2019, 2021, 2022, 2024	L1020673	
L2023	L1020663	
L2012, 2025, 2027	L0021359	
L2001*, 2004*	L1190092	FL4HR47M 0.47μH
L2006, 2014	L1190016	FL5H101K 100μH
L2007, 2028	L1190189	LAL03NA102K 1mH

		FERRITE BEADS
	L9190001	Ri3x3x1
	L9190012	FBH 5/1.7/7-1801F
		RELAY
RL2001	M1190044	G4Y-152P
		CONNECTORS
J2001	P0090370	5703-03CPB
J2002	P0090371	5703-04CPB
J2003	P0090372	5703-05CPB
		TERMINAL POSTS
	Q5000016	TP-E
	Q5000026	TP-F
	Q5000049	TP-J
	R0106510	Shield Case
	R0106520	Shield Cover
	R0106530	" (Rear)

CONTROL UNIT

Symbol No.	Part No.	Name & Description
	F2634103A	Printed Circuit Board
	C026343A	PCB with Components w/o Battery (BAT4001)
		ICs
Q4001	G1090623	HD44868 A03
Q4002	G1090619	HD44750 F11
Q4008	G1090084	μPC78L05
Q4009	G1090584	μPD4069UBG
		TRANSISTORS
Q4005, 4006	G3111620Y/G	2SA1162Y/GR (SY/SG)
Q4003, 4004, 4007	G3327120Y/G	2SC2712Y/GR (LY/LG)
		DIODES
D4001, 4005, 4009–4015	G2090027	Si 1SS53
D4002	G2070009	" 1SS184 (B3)
D4003	G2090183	Zener HZ9A2L
D4004	G2090118	Schottky 1SS97
D4006, 4007	G2090115	LED LN317GP
D4008	G2090114	" LN217RP
		LAMP
	Q1000058	M1075-8-4

*: 25W ▲: 10W

		RESISTORS
R4015, 4016	J01245561	Carbon Film 1/4W 560Ω TJ
R4017	J01245102	" " 1kΩ "
R4006	J24205222	Chip RMC 1/10-222J 2.2kΩ
R4003, 4008, 4011, 4024–4026	J24205103	" " 103J 10kΩ
R4007, 4009, 4010, 4012–4014, 4018, 4019, 4027	J24205223	" " 223J 22kΩ
R4005, 4030	J24205473	" " 473J 47kΩ
R4001	J24205563	" " 563J 56kΩ
R4002, 4004, 4028, 4029	J24205104	" " 104J 100kΩ
R4020, 4022	J24205474	" " 474J 470kΩ
R4021, 4023	J24205105	" " 105J 1MΩ
		CAPACITORS
C4013, 4015–4020	K22170243	Chip " 220pF CH (C2012CH1H221JFA)
C4011, 4012	K22170801	" " 470pF B (C2012B1H471MFA)
C4005–4008, 4014	K22170805	" " 0.001μF " (C2012B1H102MFA)
C4021	K22170817	" " 0.01μF B (C2012B1H103MFA)
C4002, 4004	K22171008	" " 0.047μF F (C2012F1H473ZFA)
C4003, 4010	K22141904	" 25WV 0.1μF D (C3216D1E104KFA)
C4001, 4009	K72120002	Tantalum 16WV 2.2μF (F951C225MA1)
		CONNECTORS
J4002	P0090369	5703-02CPB
J4003	P0090375	5703-08CPB
J4004	P0090376	5703-09CPB
J4005	P0090372	5703-05CPB
J4006	P0090371	5703-04CPB
J4007	P0090374	5703-07CPB
J4008, 4009	P0090370	5703-03CPB
JP4001 (with wire)	T9204857	
JP4002 (")	T9204856	
P4001 (")	T9204841	
		SWITCHES
S4001	Q90000290	SGFV01T009
S4003, 4004	N4090085	SPH221A LOW, DIM
S4005	N4090094	SPH222A REV
S4006–4018	N4090051	KHH10902 STEP, TONE, ETC.
		BATTERY
BAT4001	Q9000106	CR2025

DISPLAY UNIT

Symbol No.	Part No.	Name & Description
		LCD ASSY
	Q9000291	AM-819
	R7071980	Cusion

		CONNECTOR
P5001 (with wire)	T9204864	
P5002 (")	T9204865	

88.5 Hz TONE ENCODER UNIT (Version F)

Symbol No.	Part No.	Name & Description
	F2634104	Printed Circuit Board
	C026344A	PCB with Components
		IC
Q6001	G1090239	TC5082P
		TRANSISTORS
Q6002, 6003	G3327850E	2SC2785E
		CERAMIC RESONATOR
CO6001	H7900200	CSB361.5MT
		RESISTORS
R6007	J00215101	Carbon film 1/8W 100Ω VJ
R6006	J00215222	" " 2.2kΩ "
R6009	J00215103	" " 10kΩ "
R6001, 6004, 6008	J00215473	" " 47kΩ "
R6005	J00215683	" " 68kΩ "
R6002, 6003	J00215104	" " 100kΩ "
		POTENTIOMETER
VR6001	J51745104	H0651A019-100KB 100kΩB
		CAPACITORS
C6002, 6003	K00175101	Ceramic 50WV 100pF SL (DD105SL101J50V)
C6001, 6005, 6008	K19149013	" " 0.01μF (UAT05x103K-L05AE)
C6007	K19149023	" " 0.068μF (UAT10x683K-L45AE)
C6010	K70167104	Tantalum 35WV 0.1μF (CS15E1V0R1M)
	K70167474	" " 0.47μF (CS15E1VR47M)
C6006	K70127225	" 16WV 2.2μF (CS15E1C2R2M)
C6004	K70120002	" " 10μF (489D106x0016C1)
		CONNECTORS
P6001	P0090352	3022-03A
P6002	P0090069	3022-06A

ENCODER DUMMY UNIT (Versions A, X, B & C)

Symbol No.	Part No.	Name & Description
	F2634104A	Printed Circuit Board
	C026344B	PCB with Components
		RESISTOR
R6501	J01215473	Carbon Film 1/8W 47kΩ TJ
		CONNECTORS
P6501	P0090352	3022-03A
P6502	P0090069	3022-06A

ACCESSORIES

Symbol No.	Part No.	Name & Description
		*Optional same models
		MICROPHONE
	M3090047	MH-14A8*
	M3090049	MH-15A8 (w/DTMF)*
		DC POWER CORD
	T9015605	FT-2700R (10W)
	T9015610	FT-2700RH(25W)
		SPARE FUSE
	Q0000005	5A (10W)
	Q0000007	10A (25W)
		EXT SPEAKER PLUG
	P0090034	C-107
	D6000041	WIRE STAND STAND-2
		MOBILE MOUNT BRACKET ASSY
	D6000039	MMB-27 (w/mounting screws)

FTS-8 TONE SQUELCH UNIT (D3000333) OPTION

Symbol No.	Part No.	Name & Description
	F2638101	Printed Circuit Board
		ICs
Q1	G1090577	MN6520
Q2	G1090602	μPD4066BG
		TRANSISTORS
Q3-5	G3327120Y /G	2SC2712Y/GR (LY/LG)
		DIODE
D1	G2070009	1SS184 (B3)
		CRYSTAL
X1	H0102571	MS41F 4.194304 MHz
		RESISTORS
R6	J24205331	Chip RMC1/10T 331J 330Ω
R10	J24205152	" " 152J 1.5kΩ
R4,7	J24205222	" " 222J 2.2kΩ
R12, 13, 16, 17	J24205472	" " 472J 4.7kΩ
R21	J24205103	" " 103J 10kΩ
R11	J24205123	" " 123J 12kΩ
R1	J24205223	" " 223J 22kΩ
R2, 3, 8, 15, 18–20	J24205473	" " 473J 47kΩ
R14	J24205823	" " 823J 82kΩ
R5, 9	J24205224	" " 224J 220kΩ
		POTENTIOMETER
VR1	J51750473	H0423A047-47KB 47kΩ
		CAPACITORS
C1, 2	K22170211	Chip 50WV 18pF CH (C2012CH1H180JFA)
C10	K22170801	" " 470pF E (C2012B1H471MFA)
C12	K22170805	" " 0.001μF B (C2012B1H102MFA)
C3	K22171004	0.01μF F (C2012F1H103ZFA)
C7	K22141902	" 25WV 0.047μF D (C3216D1E473MFA)
C5, 6, 8	K22141904	" " 0.1μF " (C3216d1E104MFA)
C9	K72100001	Tantalum 10WV 1μF " (F951A105MA1)
C14	K72120002	" 16WV 2.2μF " (F951C225MA1)
C4, 13	K72080003	" 6.3WV 10μF (F950J106MC1)
C15	K72080006	" " 47μF (F950J476MG1)
		CONNECTORS
P1	P0090092	3022-08A
P2	P0090069	3022-06A

FVS-1 VOICE SYNTHESIZER UNIT (D3000371) OPTION

Symbol No.	Part No.	Name & Description
	F2628101	Printed Circuit Board
		ICs
	G1090620	HD61887C45
Q2	G1090626	LA6358M
		TRANSISTOR
Q2	G3111620Y /G	2SA1162Y/GR
		CERAMIC RESONATOR
CO1	H7900210	CSB800A
		RESISTORS
R2	J24205470	Chip RMC1/10T 470J 47Ω
R3	J24205471	" " 471J 470Ω
R5	J24205332	" " 332J 3.3kΩ
R6, 9–11	J24205123	" " 123J 12kΩ
R7, 8, 12–14	J24205153	" " 153J 15kΩ
R4	J24205334	" " 334J 330kΩ
R1	J24205105	" " 105J 1MΩ
		POTENTIOMETER
VR1	J51750103	H0423A043-10KB 10kΩB
		CAPACITORS
C1, 2	K22170235	Chip 50WV 100pF CH (C2012CH1H101JFA)
C9, 11	K2217805	" " 0.001μF B (C2012B1H102MFA)
C7	K22170811	" " 0.0033μF B (C2012B1H332MFA)
C8	K22170813	" " 0.0047μF B (C2012B1H472MFA)
C5-10	K22170817	" " 0.01μF B (C2012B1H103MFA)
C3, 6, 12	K72160001	Tantalum 35WV 0.1μF (F951V104MA1)
C4	K72080003	" 6.3WV 10μF (F950J106MC1)
		SWITCH
S1	N6090051	SS212
		CONNECTOR
J1	P0090377	5703-10CPB