FT-23R

TECHNICAL SUPPLEMENT

YAESU MUSEN CO., LTD.
C.P.O. BOX 1500, TOKYO, JAPAN
YAESU U.S.A.
17210 Edwards Rd., Cerritos, California 90701, U.S.A.
YAESU EUROPE B.V.
Snipweg 3. 1118AA Schiphol, The Netherlands

Eatly and late models can be listinguished by the location of the clone switch, as shown below.

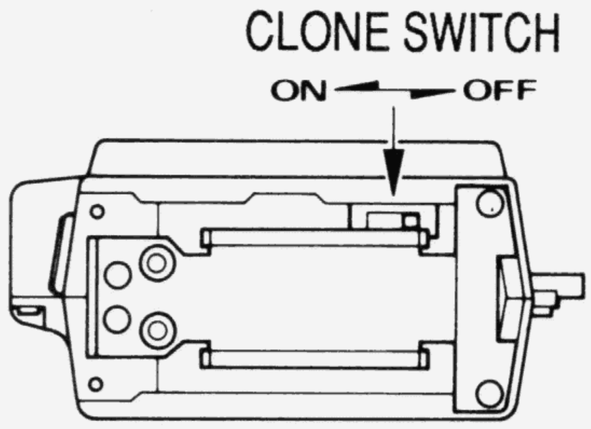

Early Model

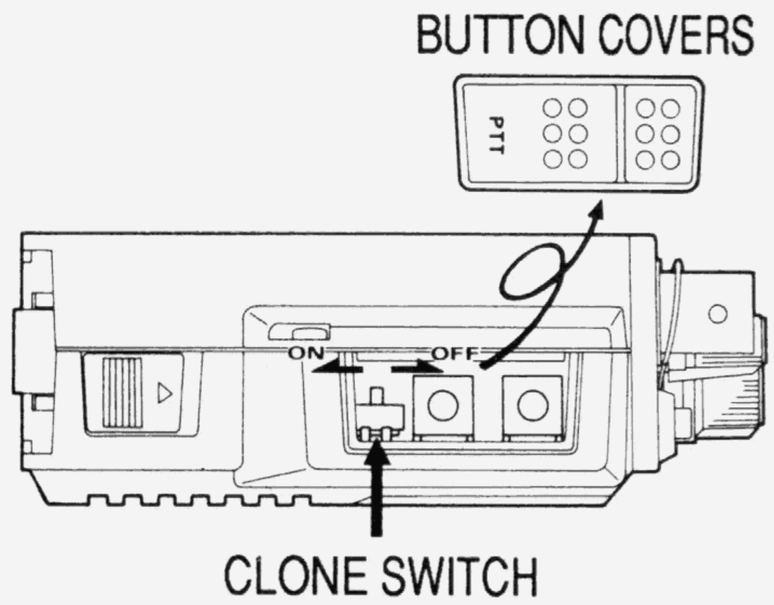

Late Model

Early Model FT-23R

CONTENTS

MOTHER BOARD · · ·

MOTHER BOARD

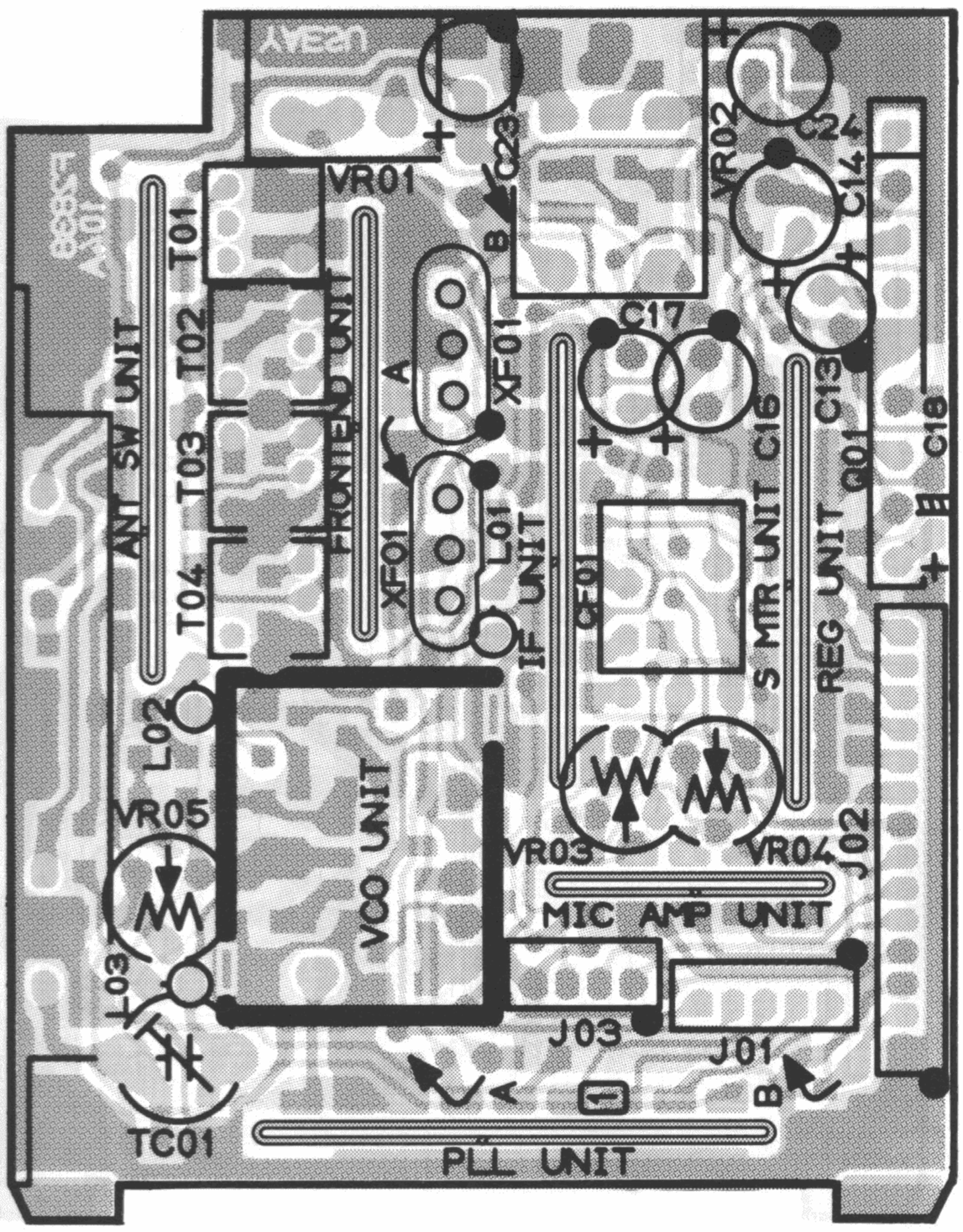

(obverse view of "component" side)

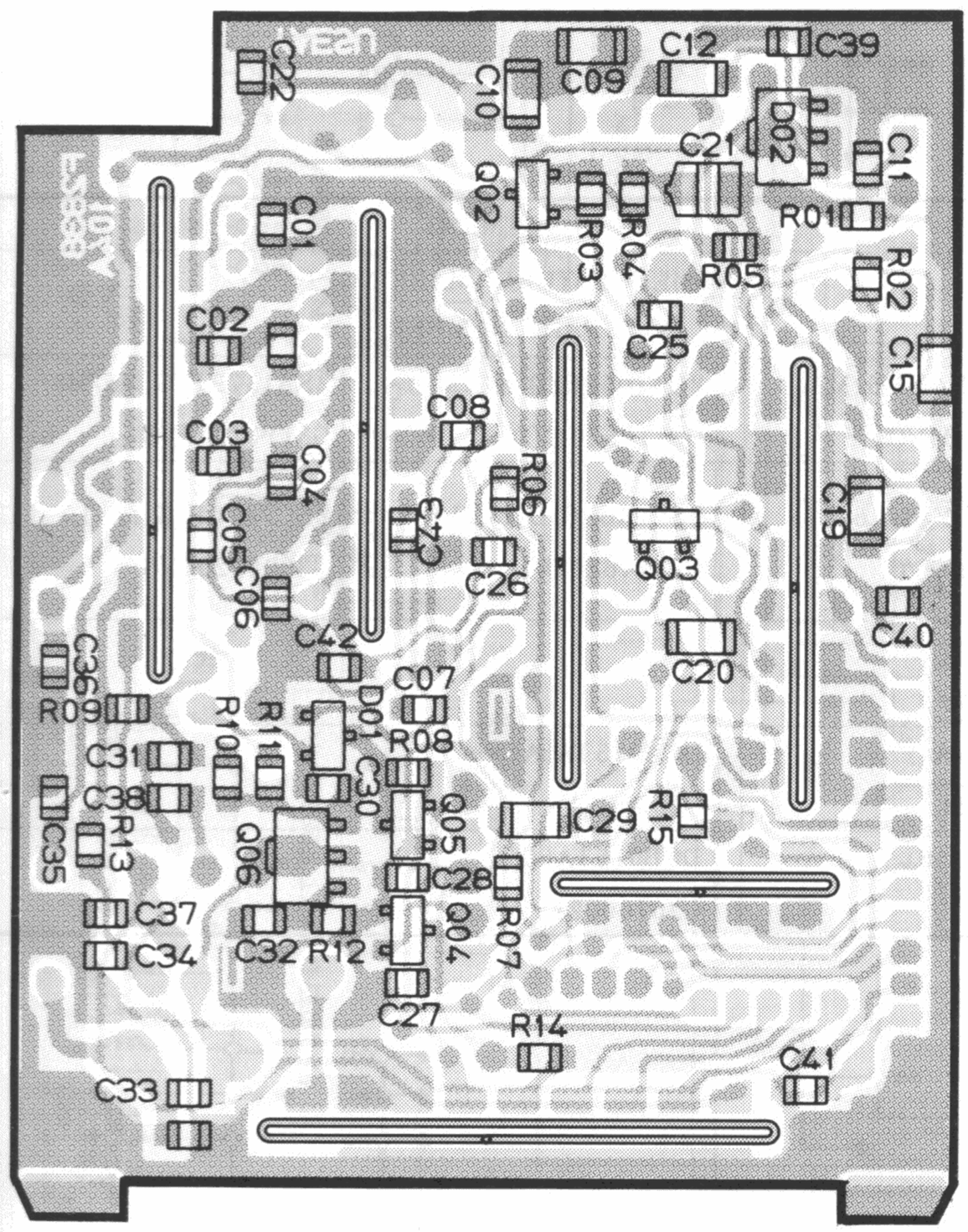

(reverse view of "chip-only" side)

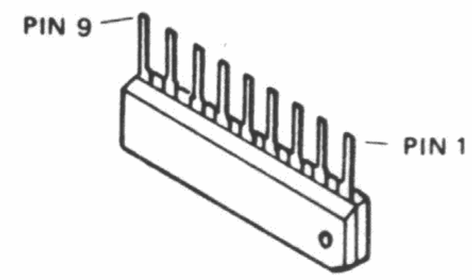

LA4145 (Q101)

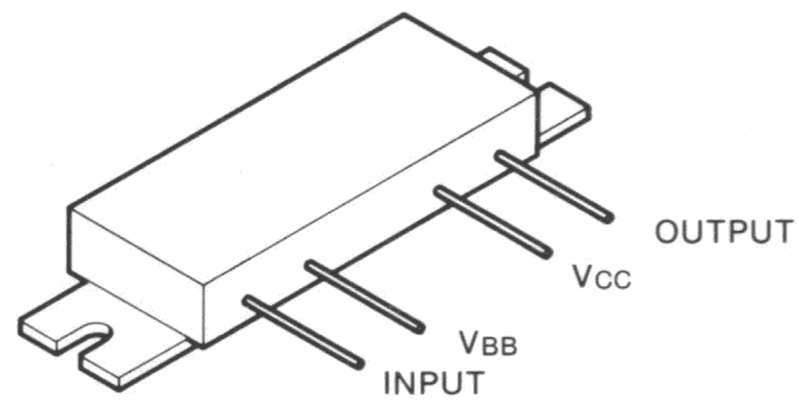

M57796MA (Q107)

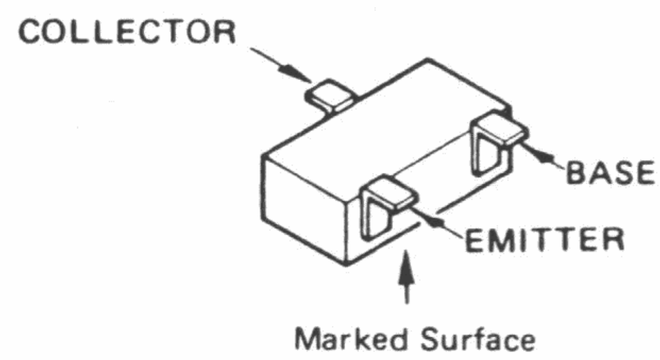

2SA1162GR	(SG)	: (Q102)
2SC2712GR	(LG)	: (Q103)
2SC3356	(R22)	: (Q105)
FA1A4M	(L33)	: (Q104)

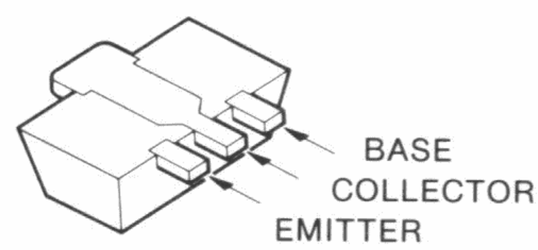

2SC2954 (Q106)

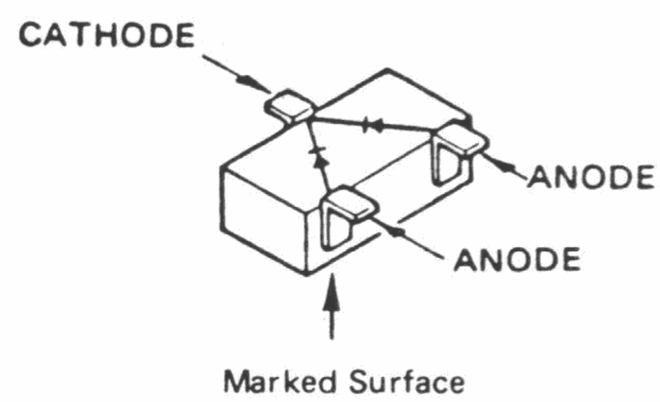

1SS184 (B3) : (D101)

MOTHER BOARD

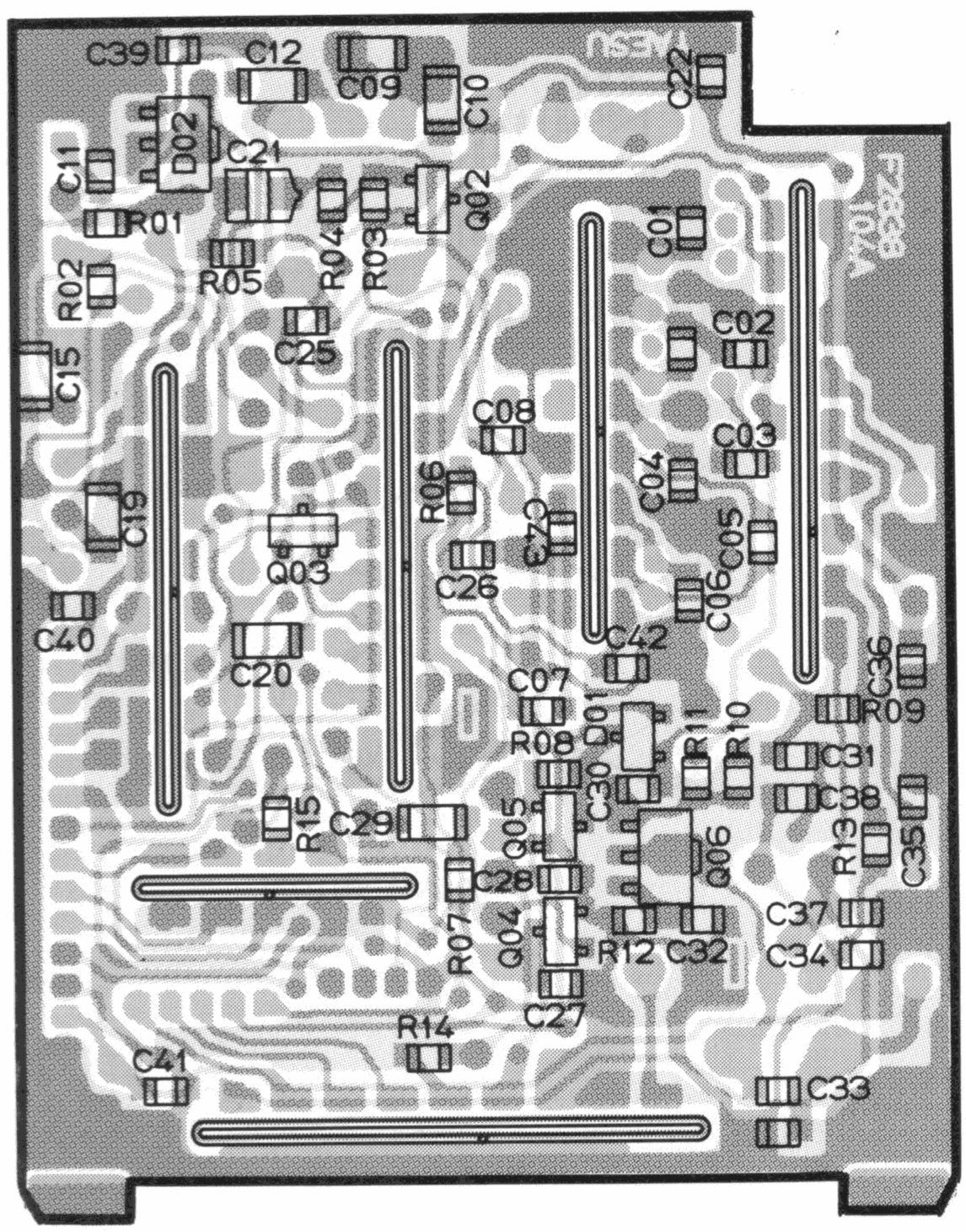

(obverse view of "chip-only" side)

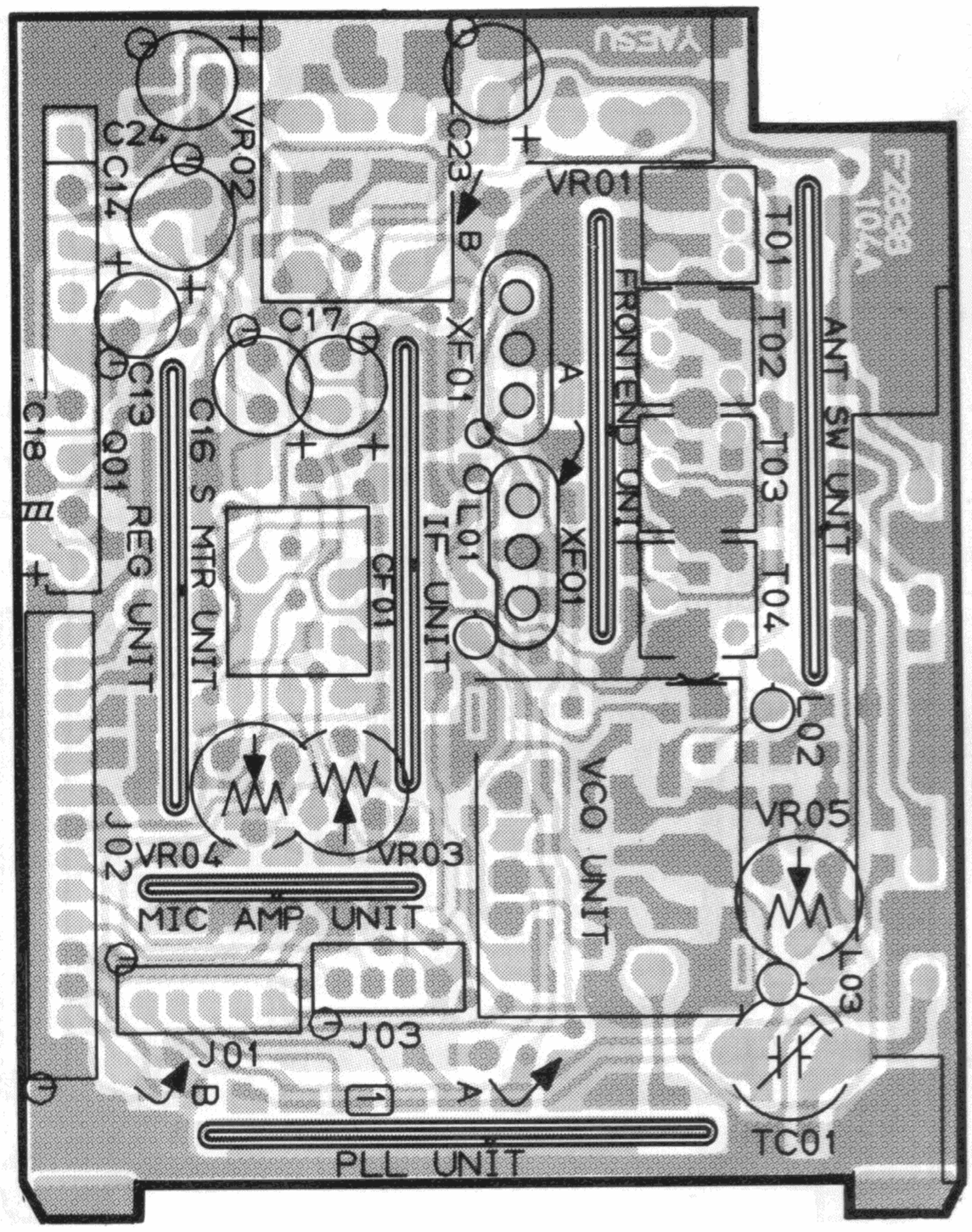

(reverse view of "component" side)

CHIP SEMICONDUCTOR CROSS-REFFERENCE

PART LOCATION NO.	ORIGINAL	REPLACEMENT		
	NOMENCLATURE (MARKING) AND PART NUMBER	NOMENCLATURE (MARKING) AND PART NUMBER		
Q102,605,606,607,1002,1012	2SA1162GR(SG) G3111620G	2SA812F/G(M6/M7) G3108120F/G	2SA1052C/D(MC/MD) G3110520C/D	2SA1179F/G(M6/M7) G3111790F/G
Q103,602,603,608,801,802,902, 903,904,1003,1004,1005,1006, 1010	2SC2712GR/BL(LG/LL) G3327120G/B	2SC1623F/G(L6/L7) G3316230F/G	2SC2462C/D(LC/LD) G3324620D/D	2SC2812F/G(L6/L7) G3328120F/G
Q701	M5224FP G1090726	LA6324M G1090559		
D1001,1002	1SS181(A3) G2070001	MC2836(A4) G2070024	DCA015TA(A4) G2070014	
D603,1007,1008	1SS184(B3) G2070009	MC2838(A6) G2070018	DCB015TA(A6) G20700021	

※ Semiconductors not listed above may be replaced only with original types.

MOTHER BOARD

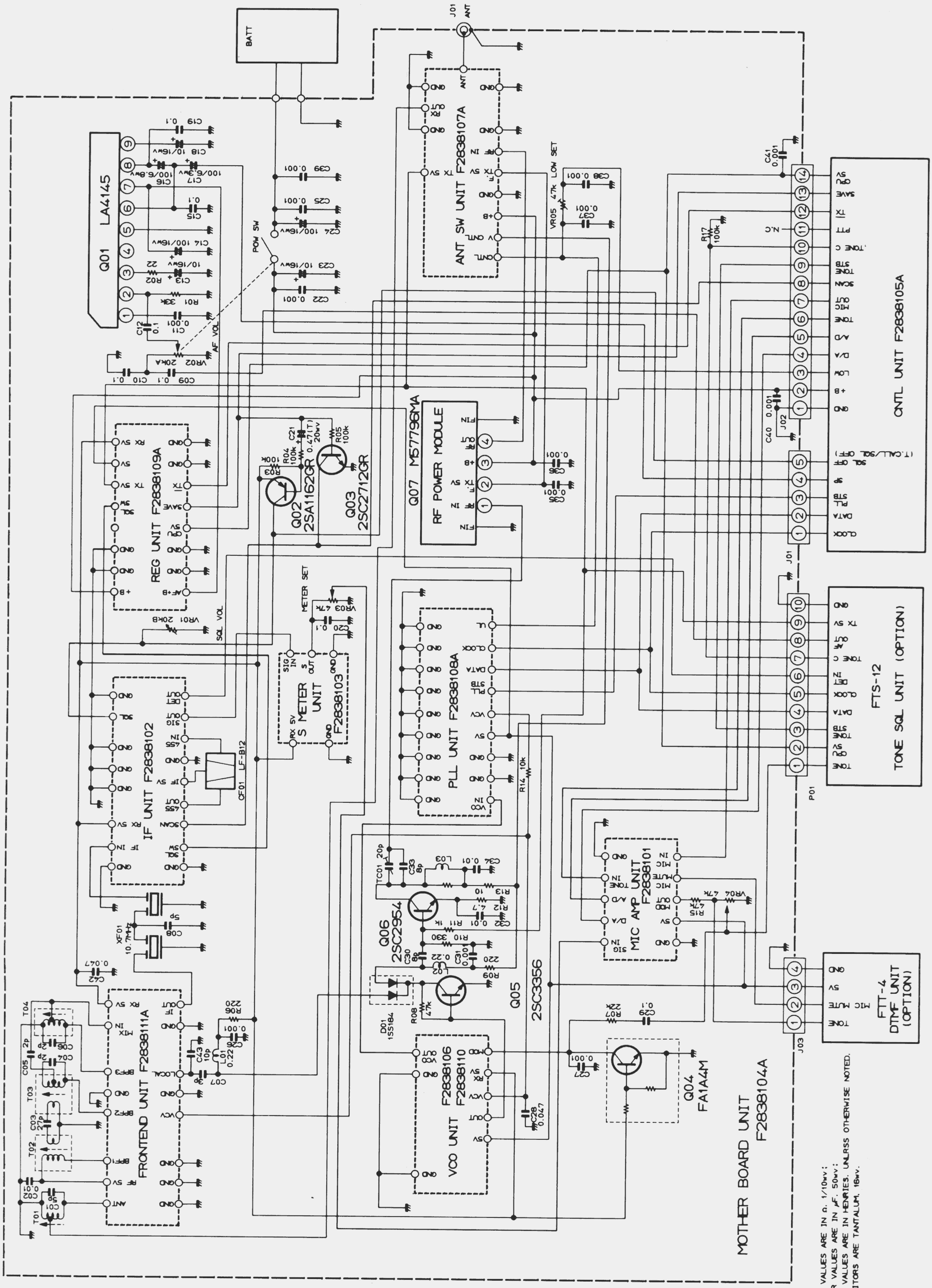

FRONTEND UNIT

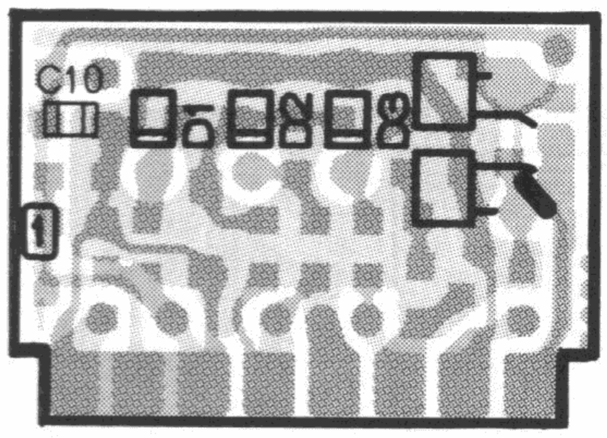

(obverse view of "diode" side)

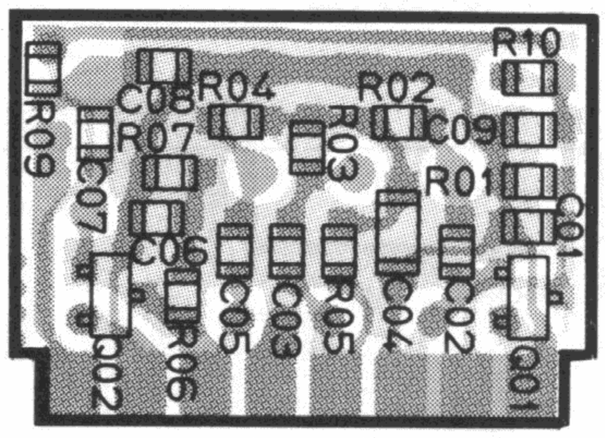

(obverse view of "FET" side)

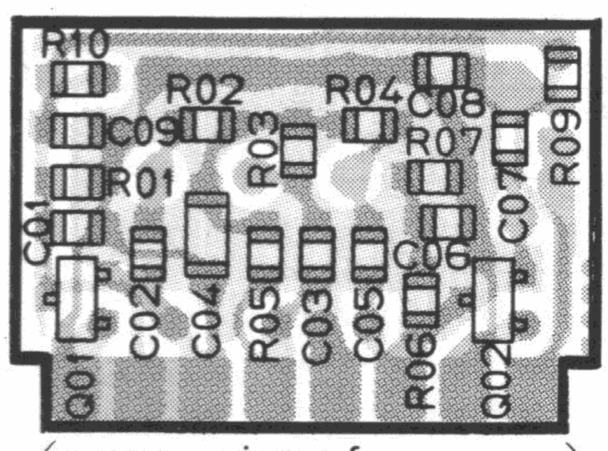

(reverse view of "FET" side)

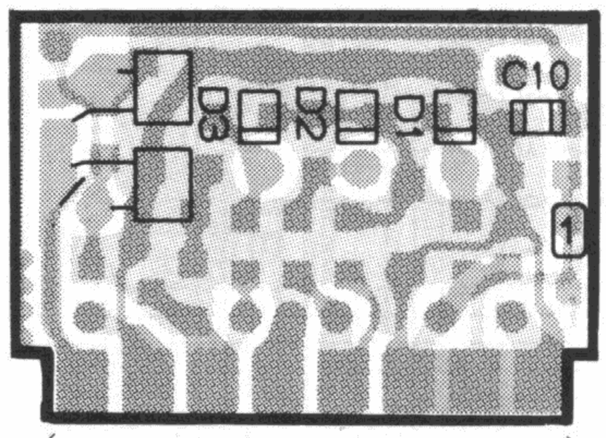

(reverse view of "diode" side)

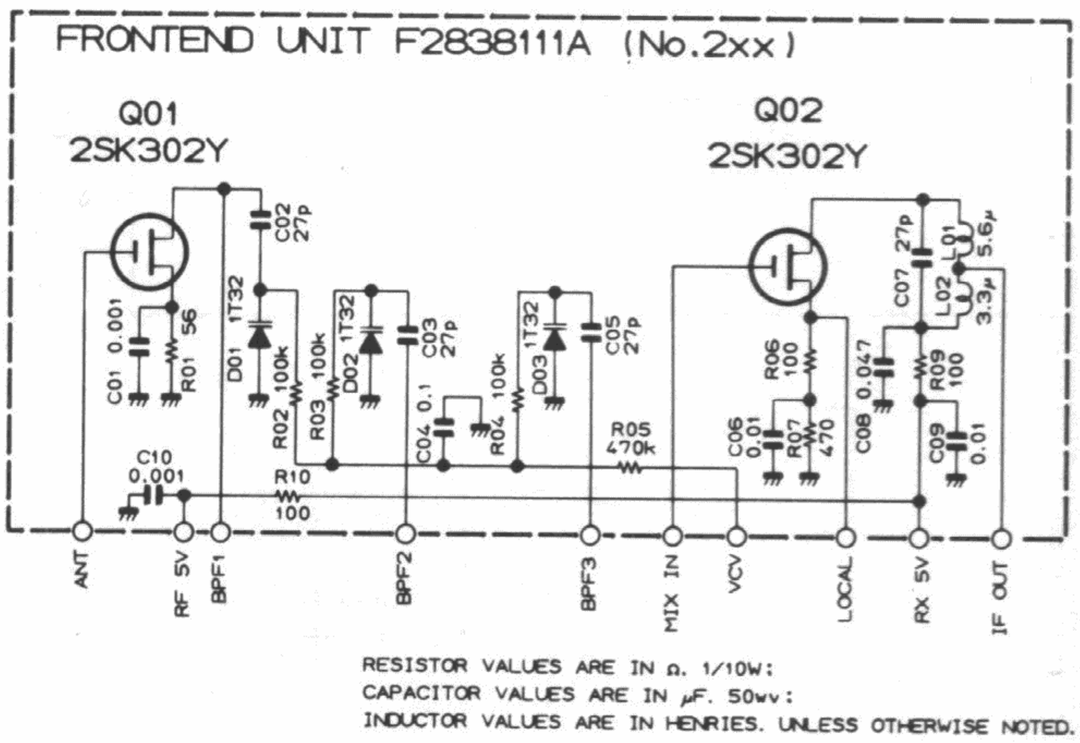

RESISTOR VALUES ARE IN Ω. 1/10W:
CAPACITOR VALUES ARE IN μF. 50wv:
INDUCTOR VALUES ARE IN HENRIES. UNLESS OTHERWISE NOTED.

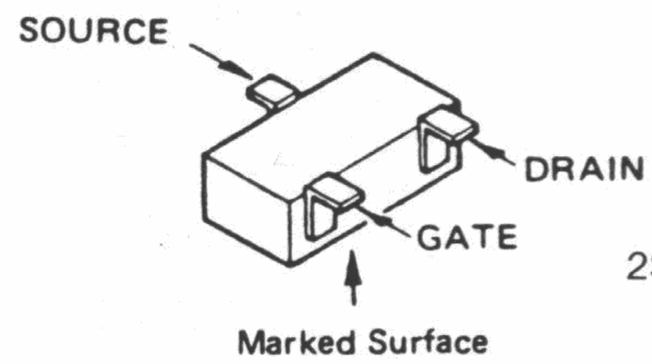

2SK302Y (TY)
(Q201,202)

IF UNIT

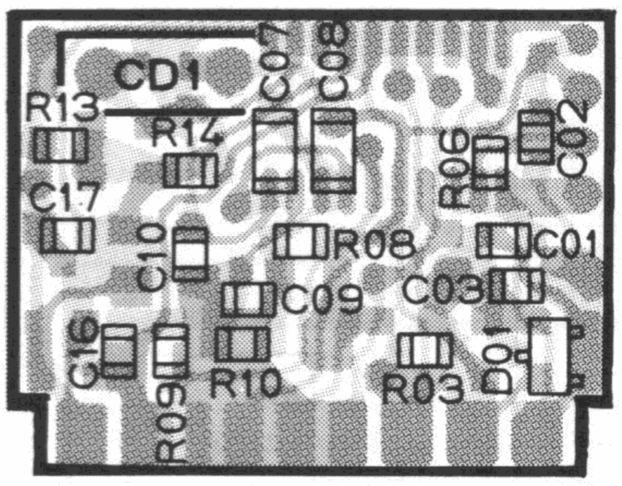

(obverse view of "mixed-component" side)

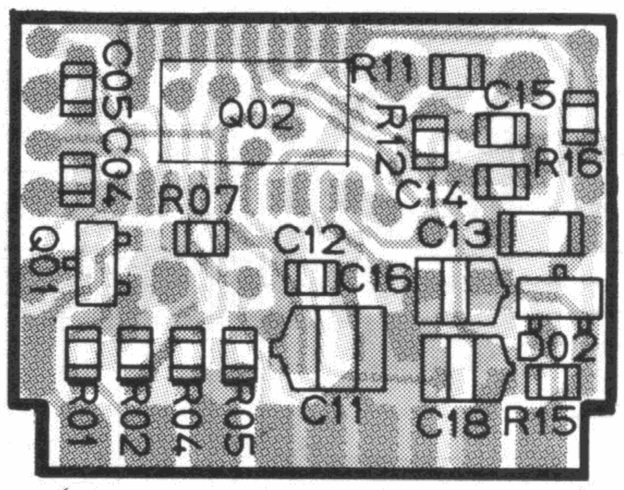

(obverse view of "chip-only" side)

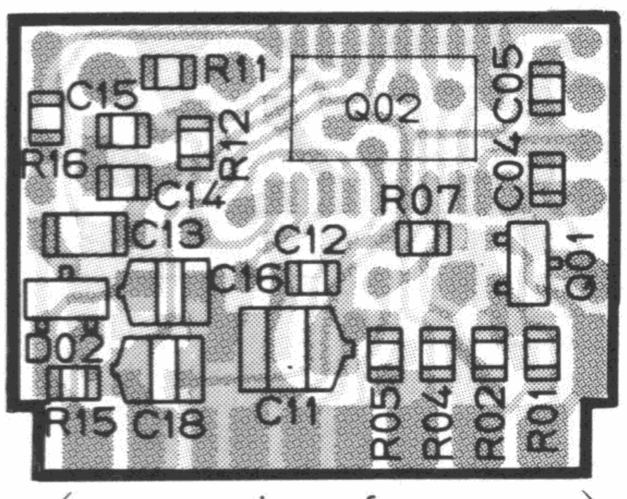

(reverse view of "chip-only" side)

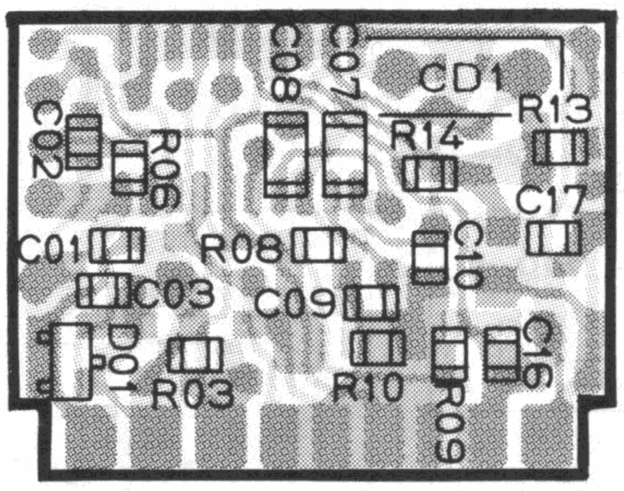

(reverse view of "mixed-component" side)

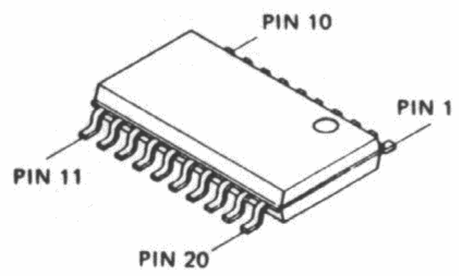

TK10420M (Q302)

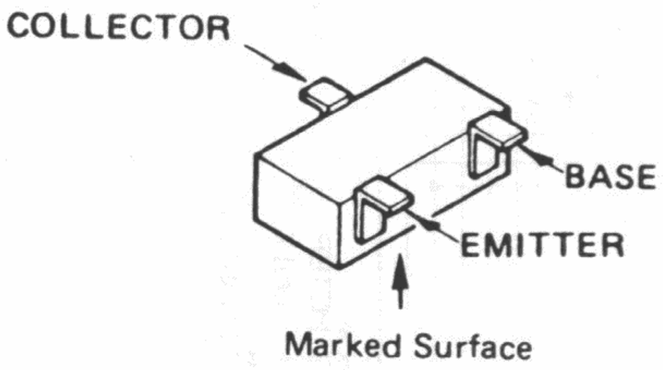

2SC2620B (QB)
(Q301)

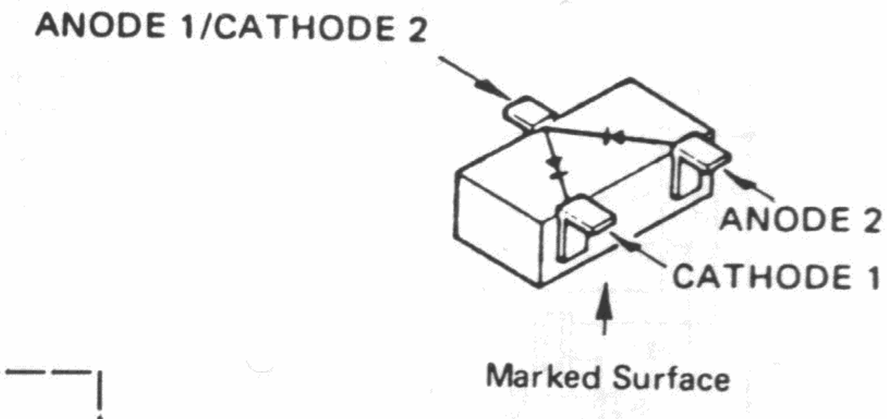

1SS226 (C3)
(D301,302)

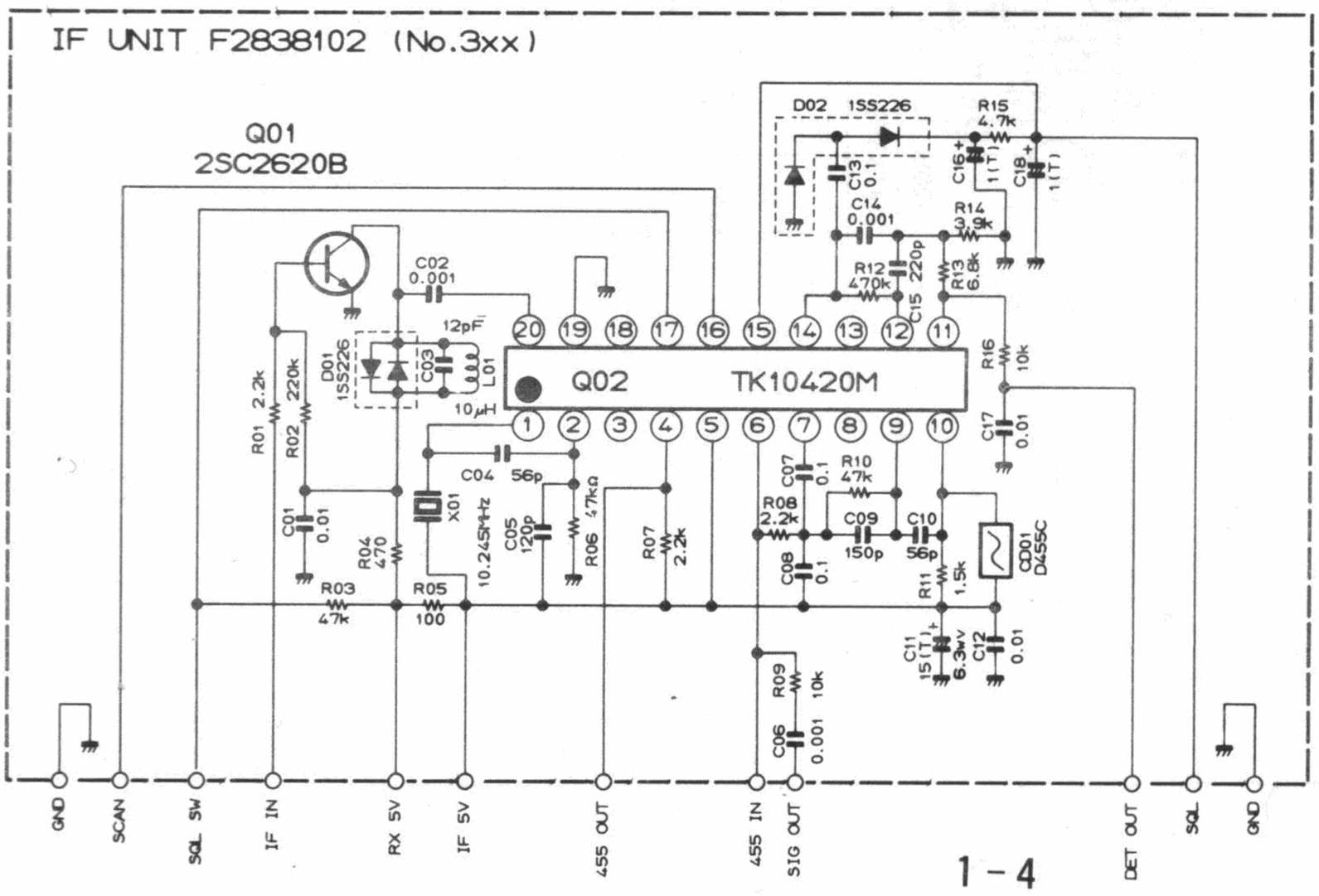

RESISTOR VALUES ARE IN Ω. 1/10W:
CAPACITOR VALUES ARE IN μF. 50wv:
INDUCTOR VALUES ARE IN HENRIES. UNLESS OTHERWISE NOTED.
(T)CAPACITORS ARE TANTALUM. 10wv.

PLL UNIT

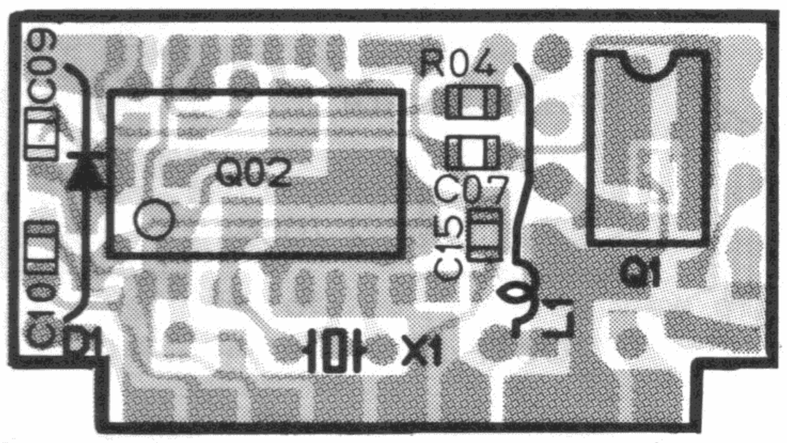

(obverse view of "mixed-component" side)

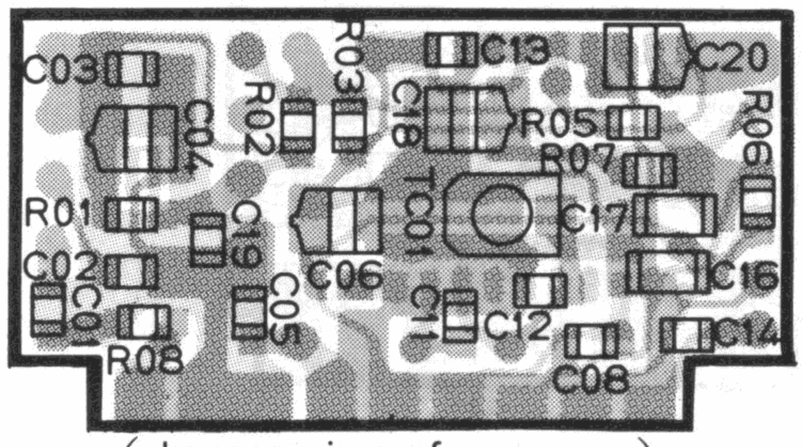

(obverse view of "chip-only" side)

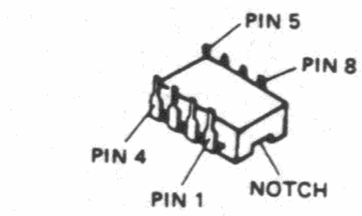

MC12017P (Q401)

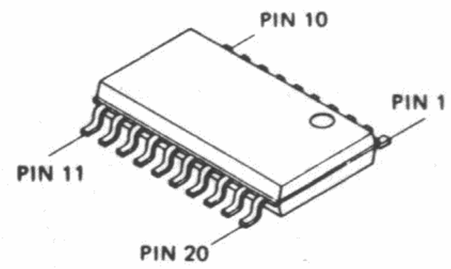

JLC1007P (Q402)

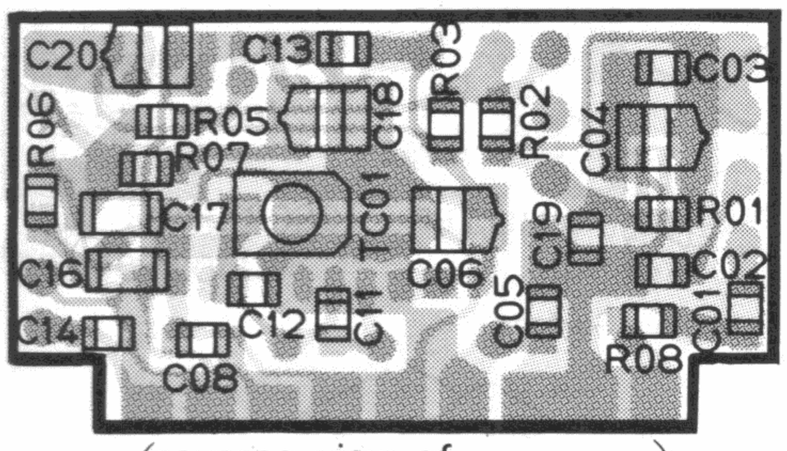

(reverse view of "chip-only" side)

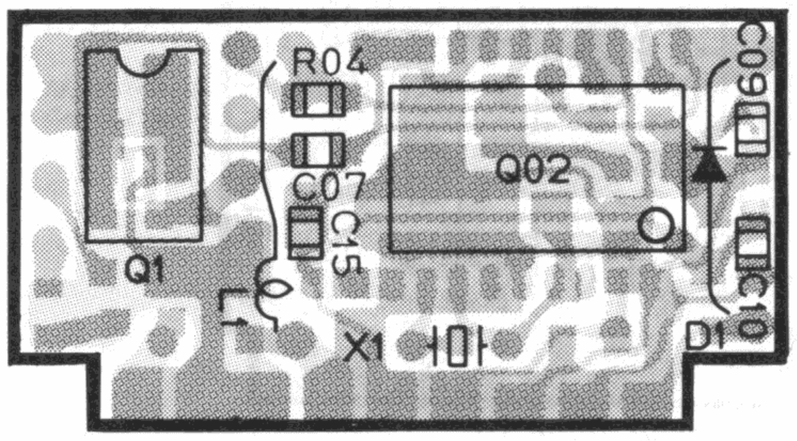

(reverse view of "mixed-component" side)

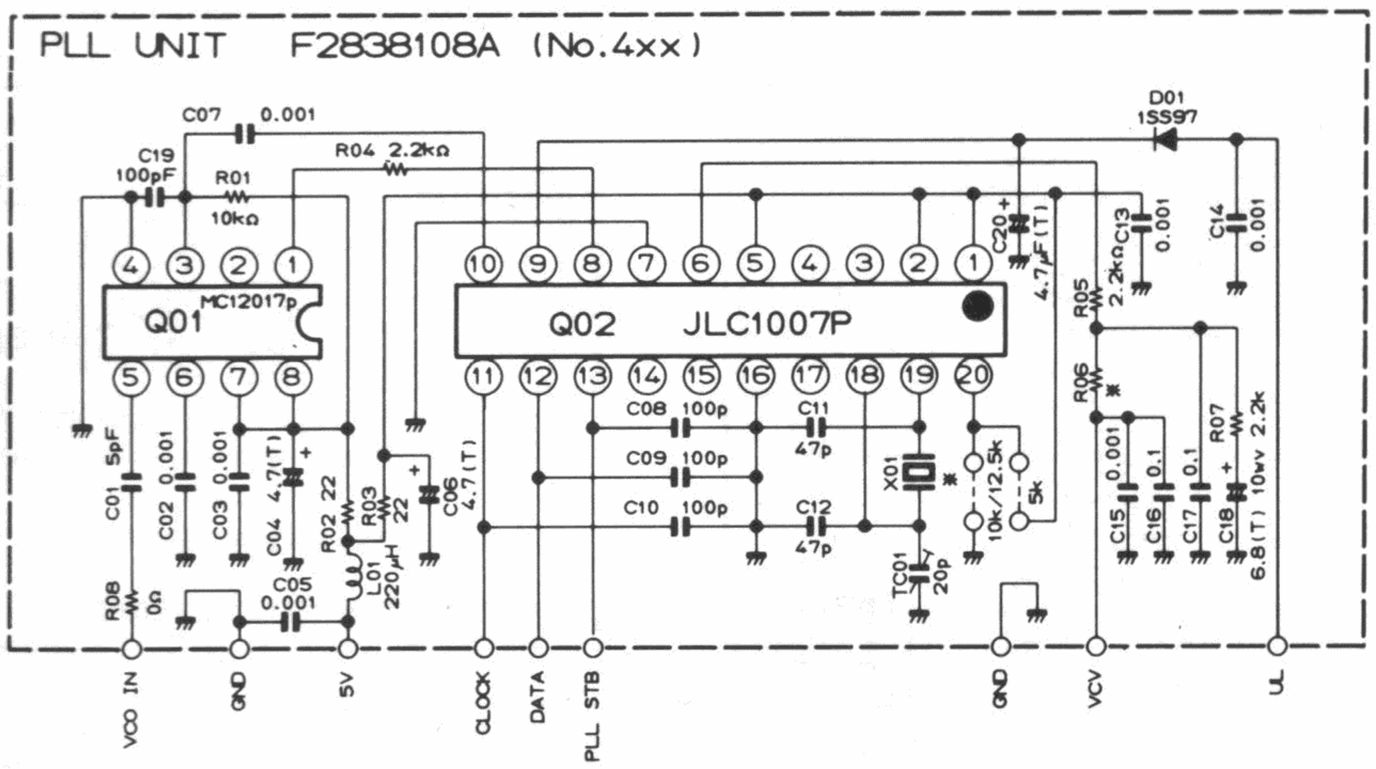

R06	15kΩ= 5kHz 10kΩ= 10kHz STEP 4.7kΩ=12.5kHz STEP
X01	10.24MHz=5kHz STEP 12.8MHz=12.5kHz STEP

RESISTOR VALUES ARE IN Ω. 1/10W:
CAPACITOR VALUES ARE IN μF. 50wv:
INDUCTOR VALUES ARE IN HENRIES. UNLESS OTHERWISE NOTED.
(T)CAPACITORS ARE TANTALUM. 6.3wv.

VCO UNIT

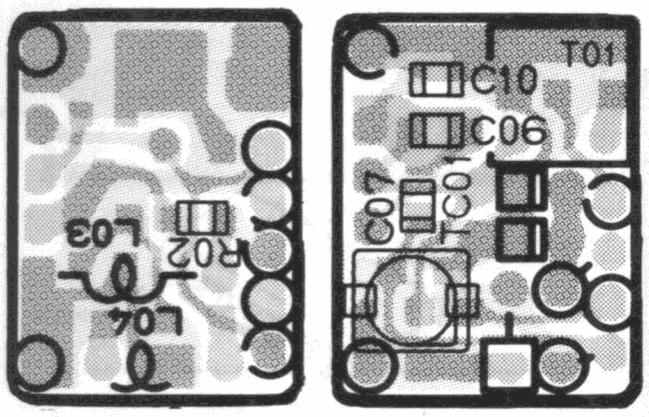

(obverse view of "mixed-component" side)

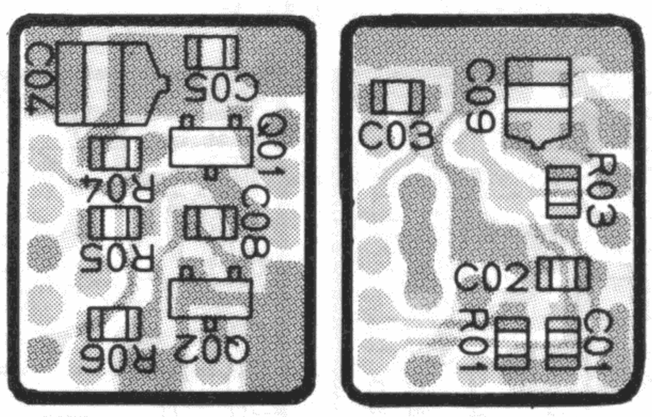

(obverse view of "chip-only" side)

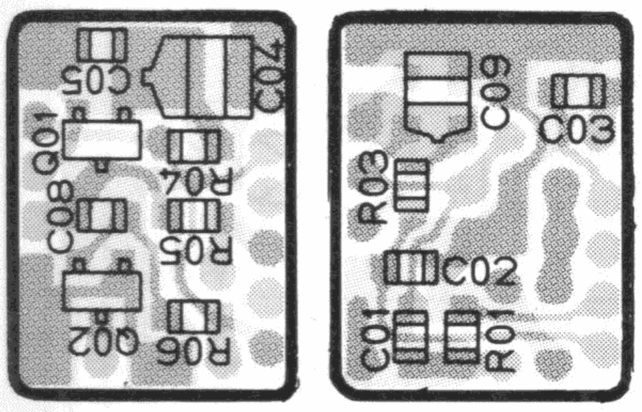

(reverse view of "chip-only" side)

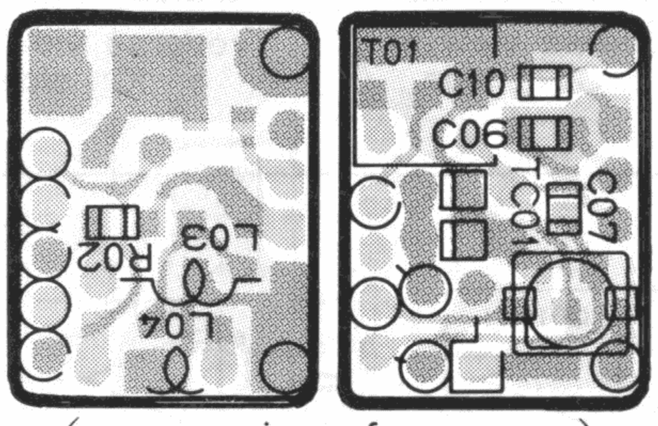

(reverse view of "mixed-component" side)

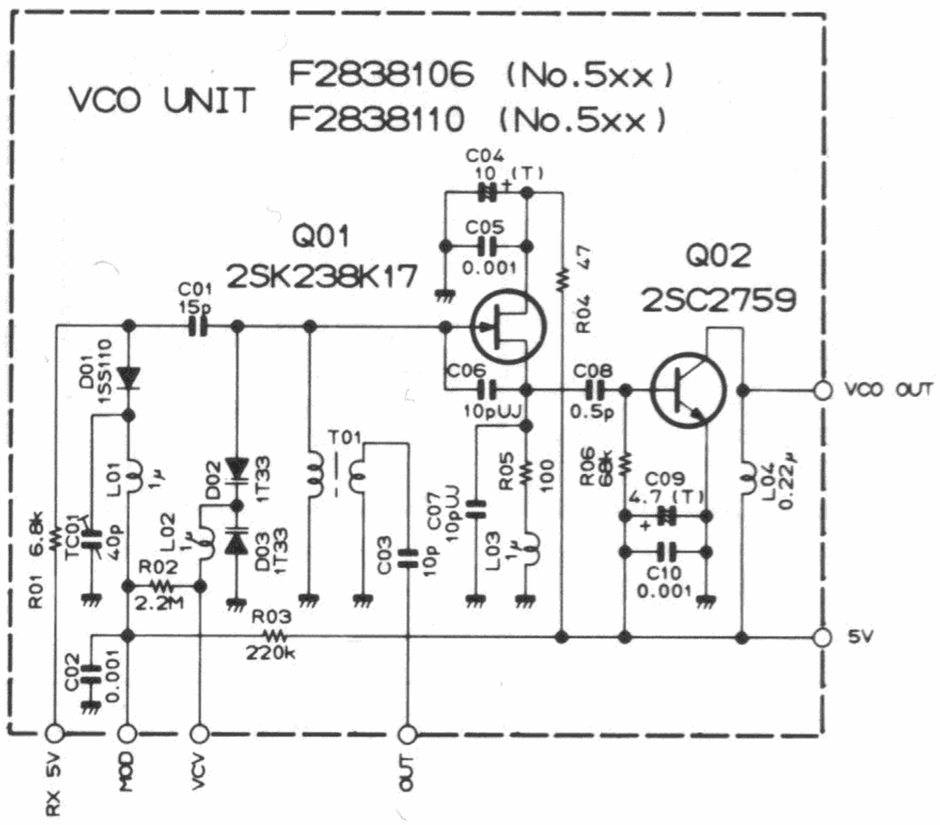

RESISTOR VALUES ARE IN Ω. 1/10w:
CAPACITOR VALUES ARE IN μF. 50wv:
UNLESS OTHERWISE NOTED.
(T)CAPACITORS ARE TANTALUM. 6.3wv.

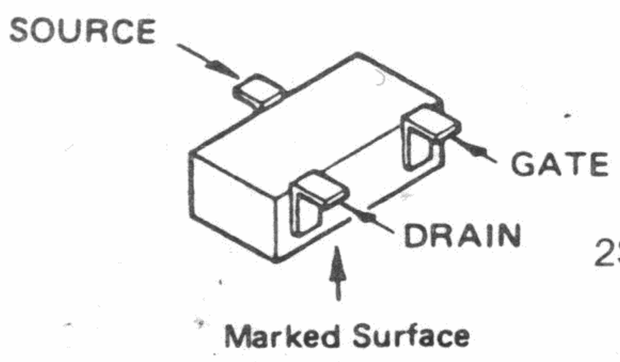

2SK238 (K17) : (Q501)

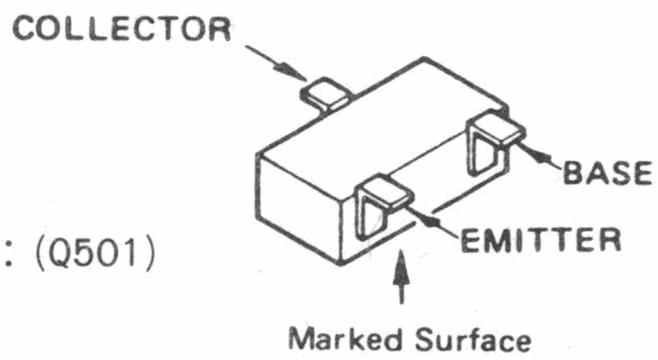

2SC2759 (U22) : (Q502)

REG UNIT

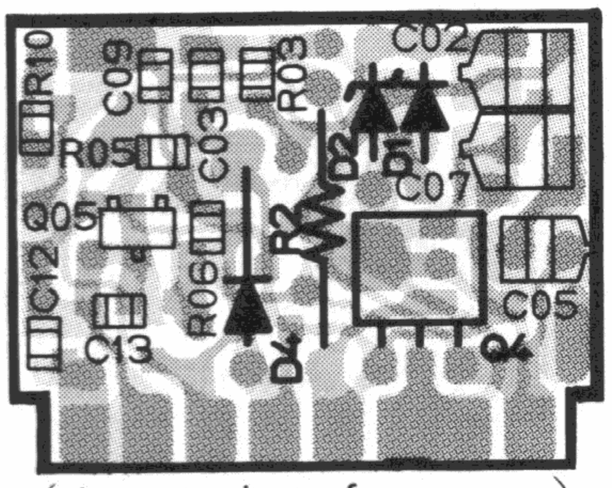

(obverse view of "mixed-component" side)

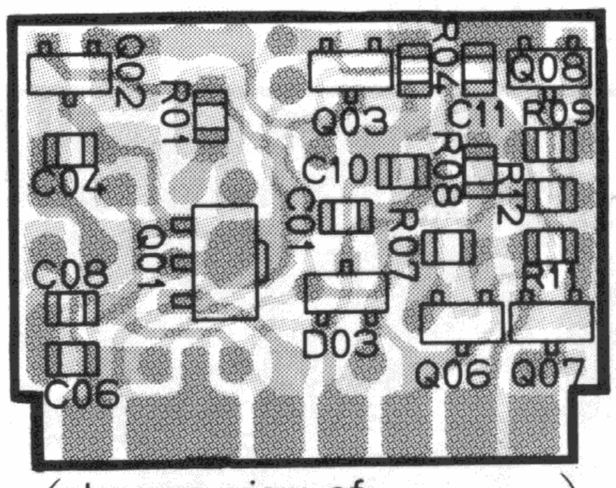

(obverse view of "chip-only" side)

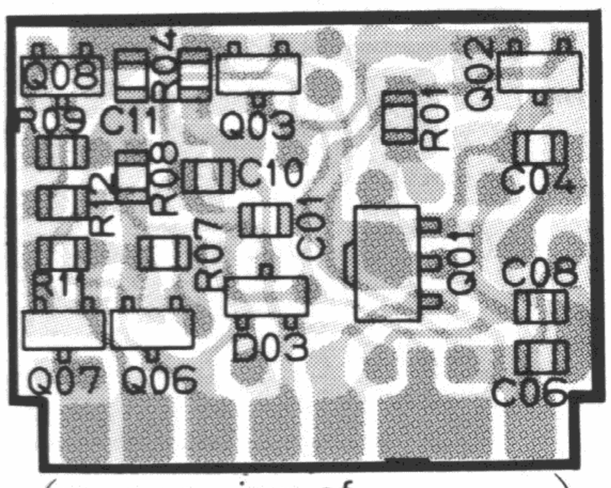

(reverse view of "chip-only" side)

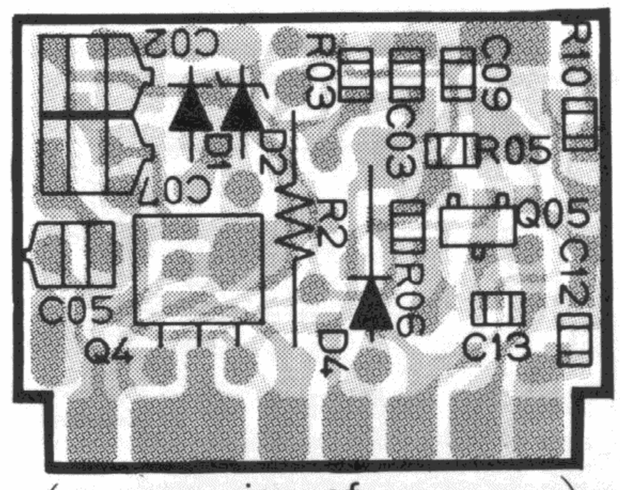

(reverse view of "mixed-component" side)

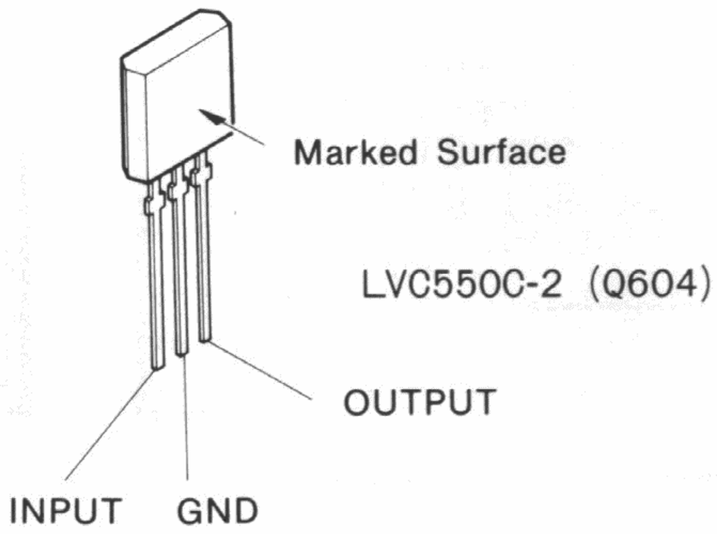

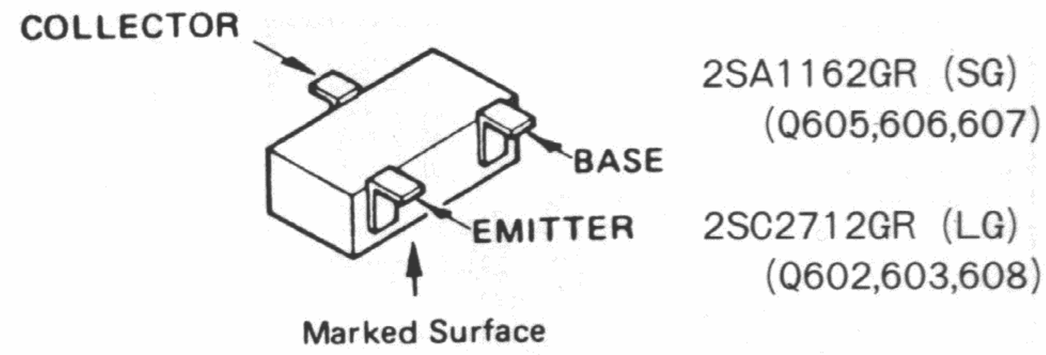

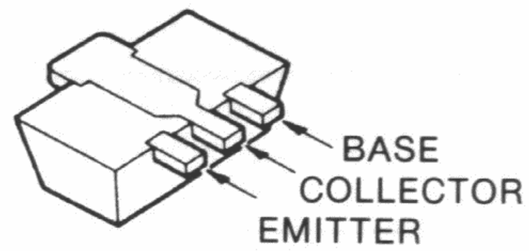

2SB799 (Q601)

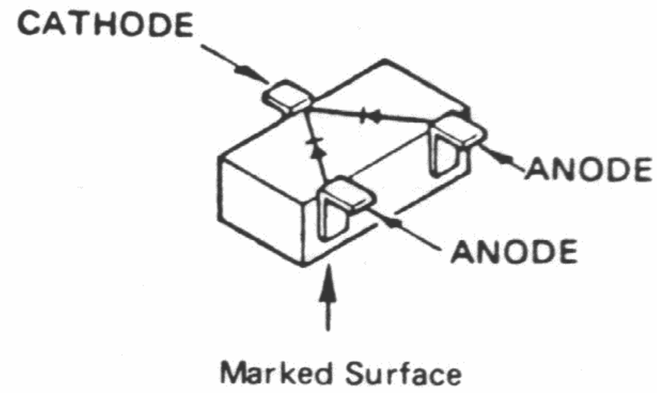

1SS184 (B3) : (D603)

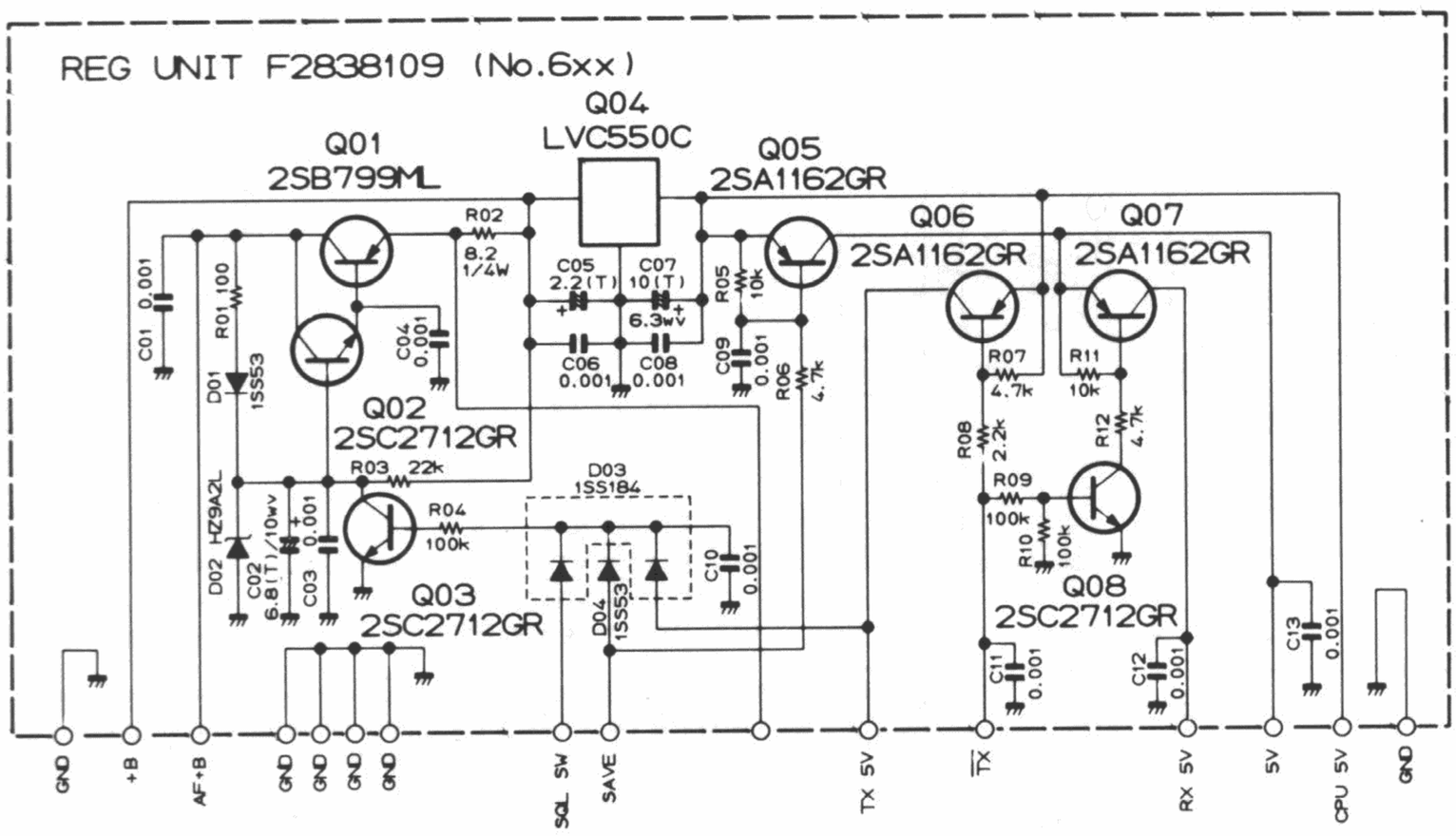

RESISTOR VALUES ARE IN Ω. 1/10W:
CAPACITOR VALUES ARE IN μF. 50wv:
UNLESS OTHERWISE NOTED.
(T)CAPACITORS ARE TANTALUM. 16wv.

MIC AMP UNIT

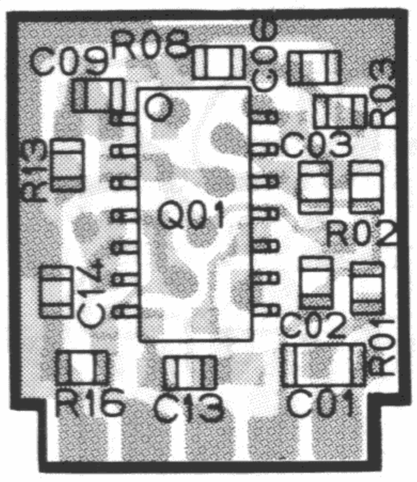

(obverse view of "IC" side)

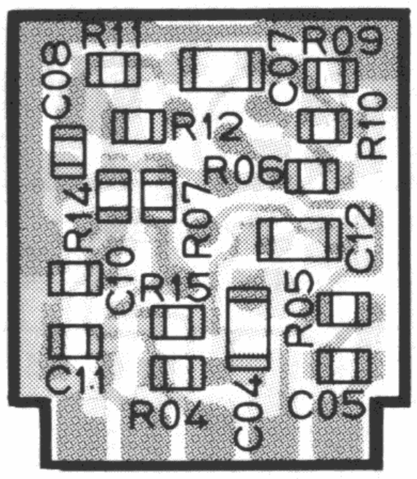

(reverse view of "C-R" side)

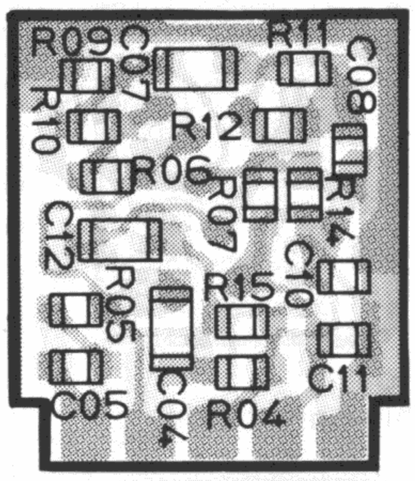

(obverse view of "C-R" side)

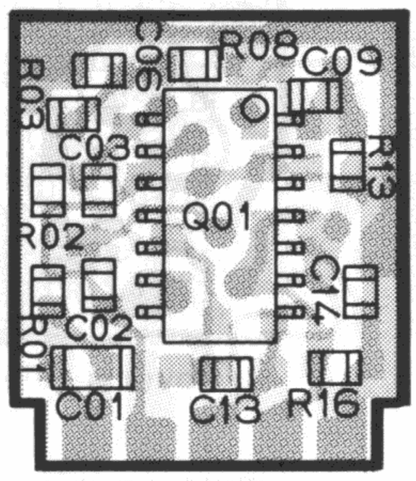

(reverse view of "IC" side)

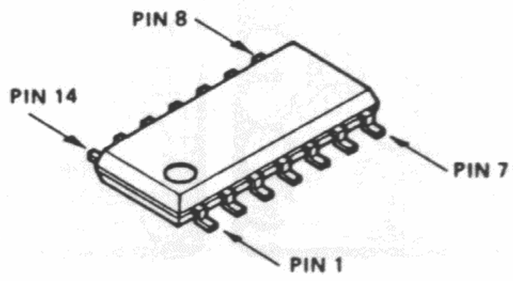

M5224FP (Q701)

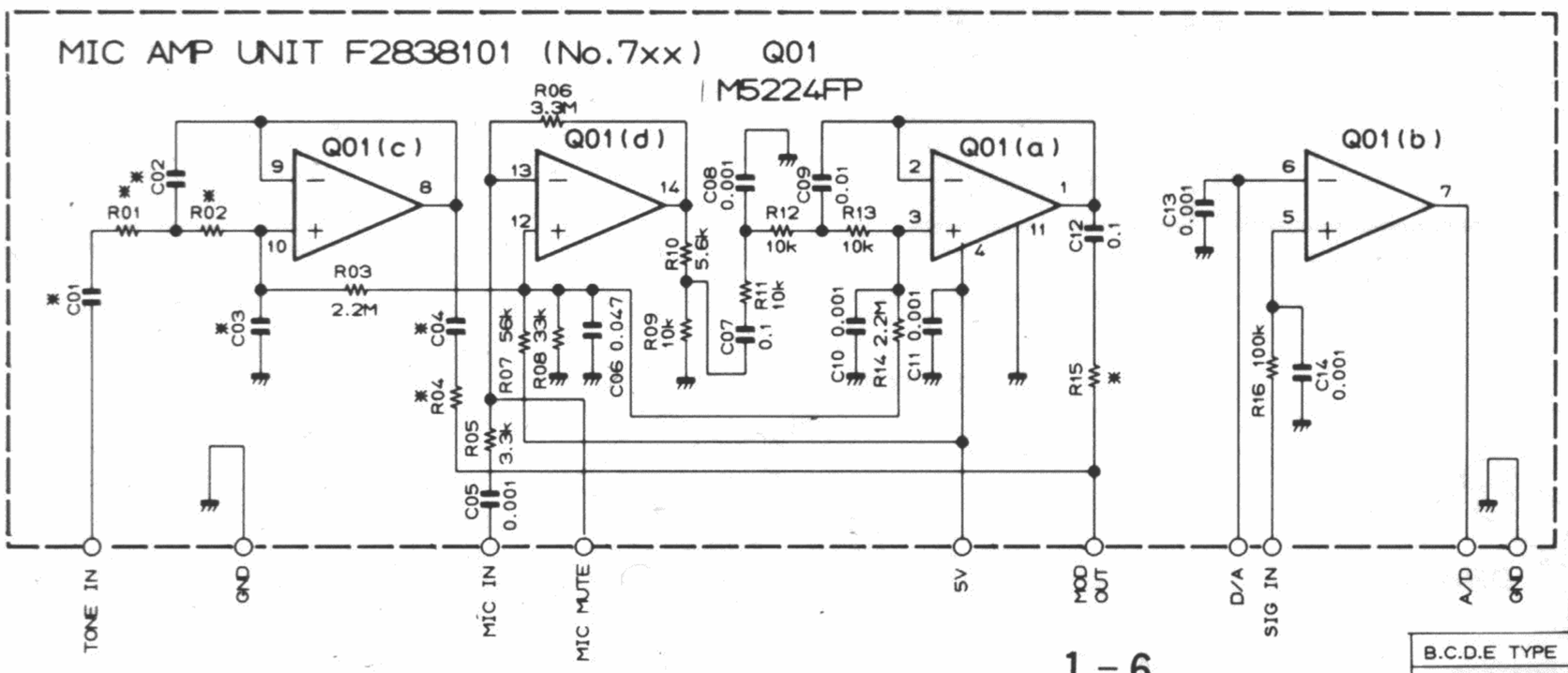

RESISTOR VALUES ARE IN Ω. 1/10W:
CAPACITOR VALUES ARE IN μF. 50wv:
UNLESS OTHERWISE NOTED.

	C01	C02	C03	C04	R01	R02	R04	R15
B.C.D.E TYPE	0.1	0.01	0.0022	0.1	10k	10k	22k	22k
A.F TYPE	—	—	0.01	—	—	—	—	22k

S METER UNIT

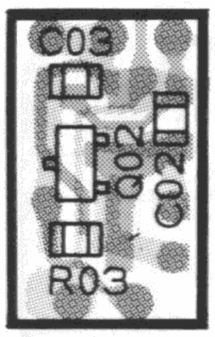

(obverse view of "top" side)

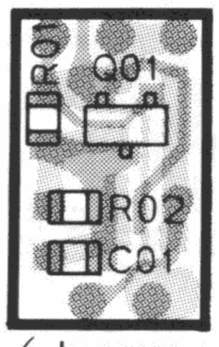

(obverse view of "bottom" side)

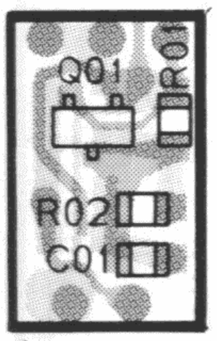

(reverse view of "bottom" side)

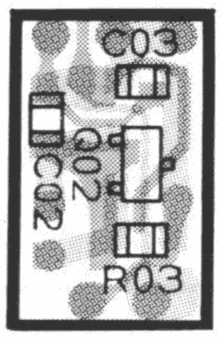

(reverse view of "top" side)

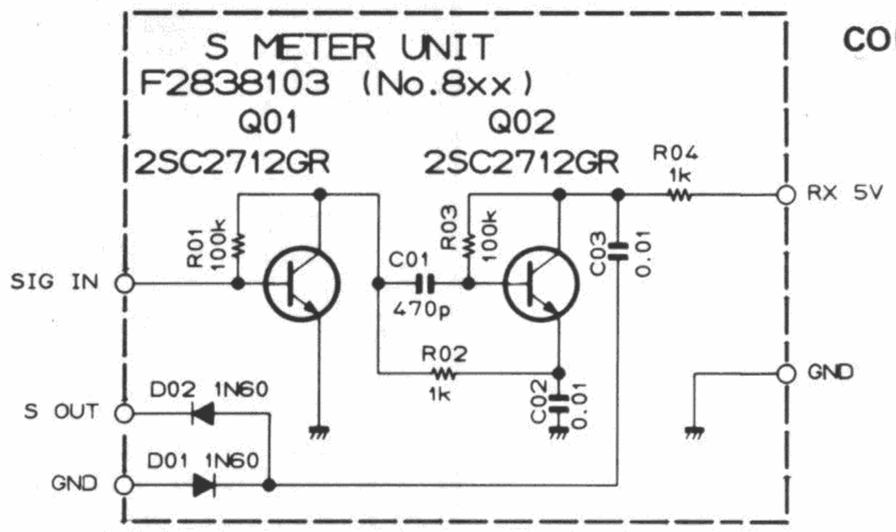

RESISTOR VALUES ARE IN Ω, 1/10W:
CAPACITOR VALUES ARE IN μF, 50wv:
UNLESS OTHERWISE NOTED.

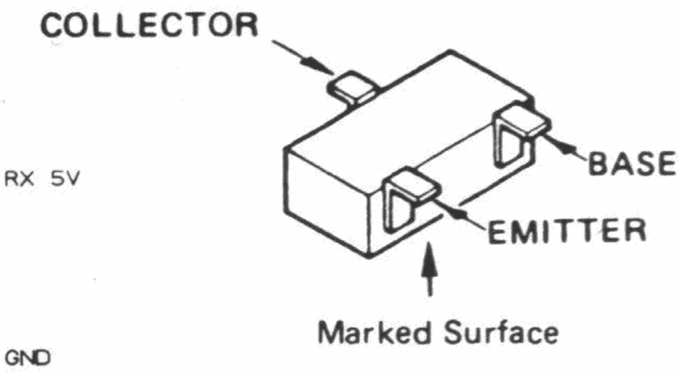

2SC2712GR (LG)
(Q801,802)

ANT SW UNIT

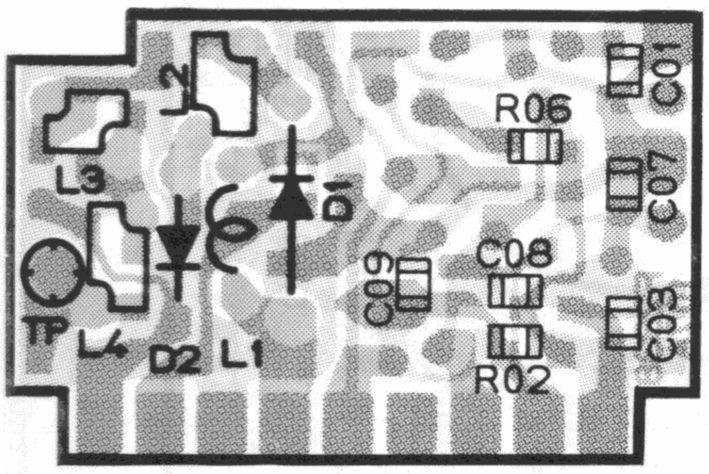

(obverse view of "mixed-component" side)

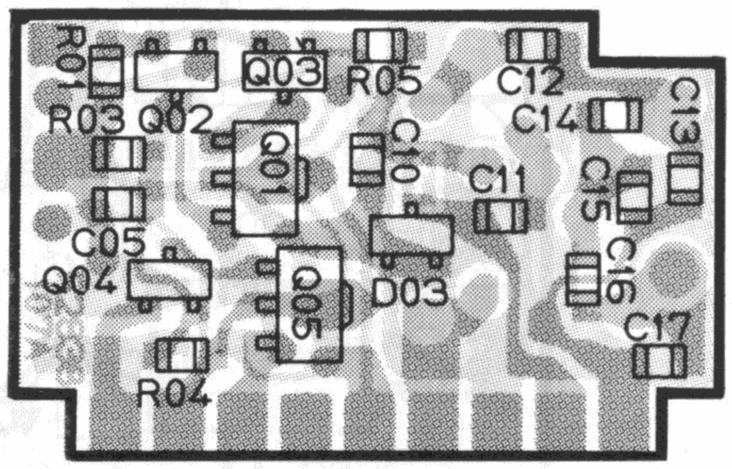

(obverse view of "chip-only" side)

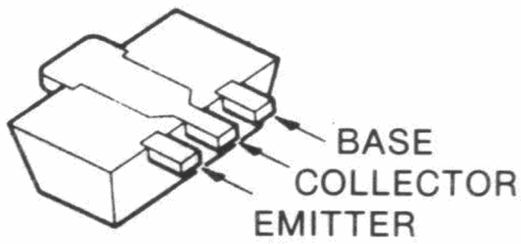

2SB799 (Q901,905)

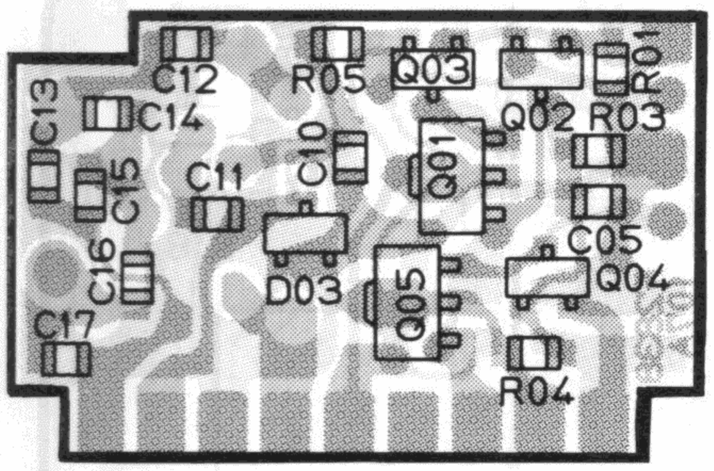

(reverse view of "chip-only" side)

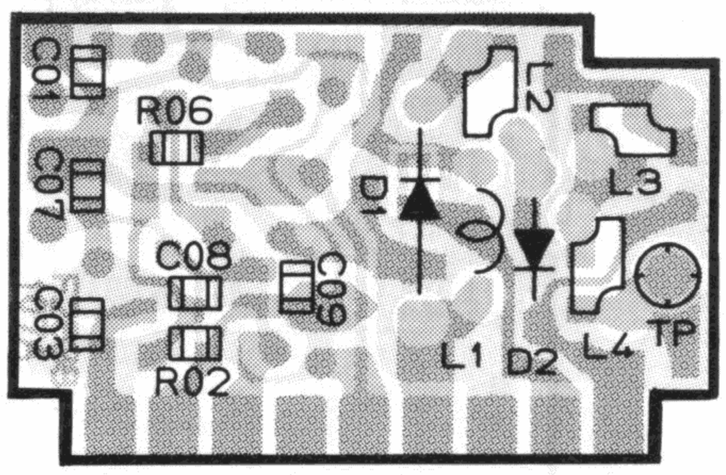

(reverse view of "mixed-component" side)

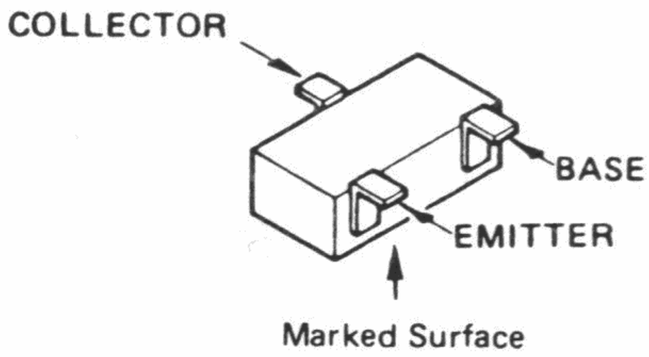

2SC2712GR (LG)
(Q902,903,904)

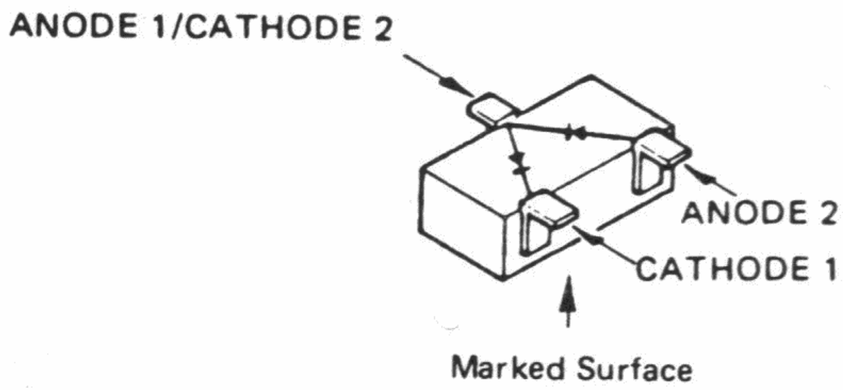

1SS226 (C3) : (D903)

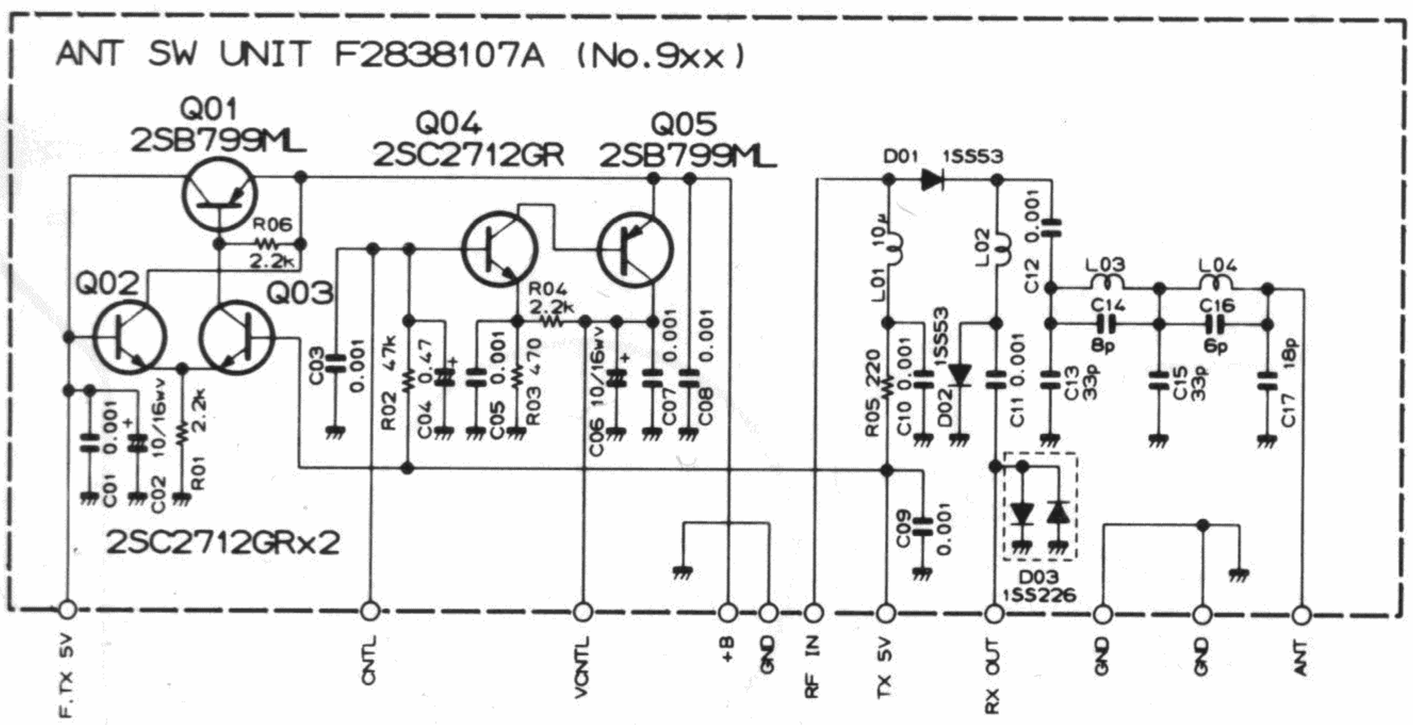

RESISTOR VALUES ARE IN Ω, 1/10W:
CAPACITOR VALUES ARE IN μF, 50wv:
INDUCTOR VALUES ARE IN HENRIES, UNLESS OTHERWISE NOTED.

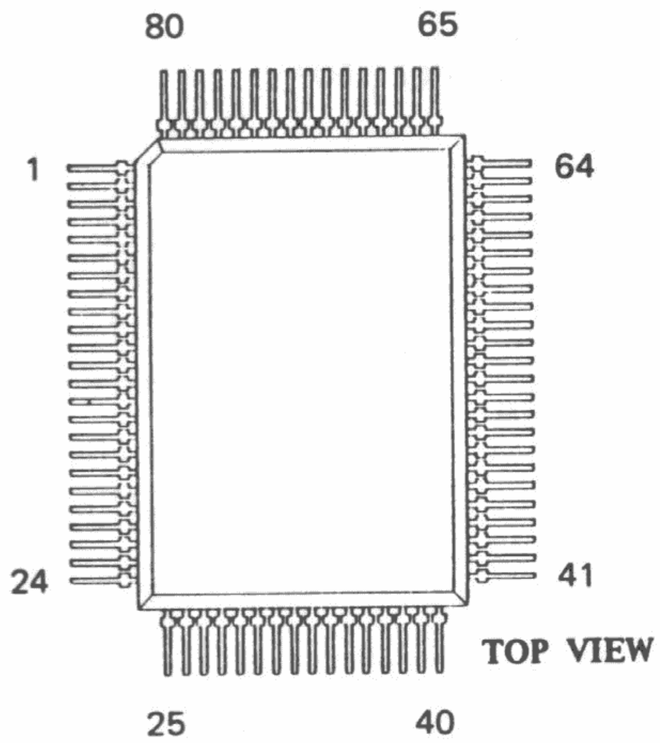

HD613901A51 (Q1001)

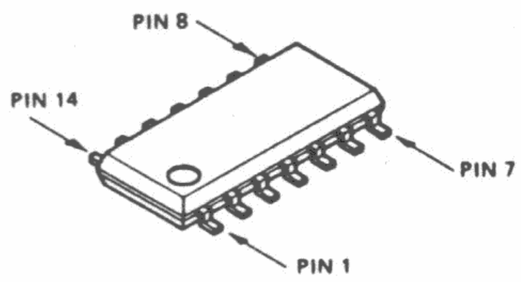

μPD4066BG (Q1008)
μPD4001BG (Q1009)

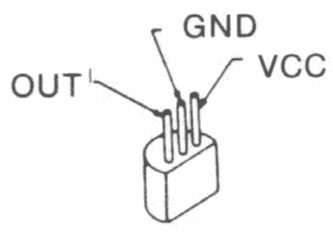

PST523G (Q1007)

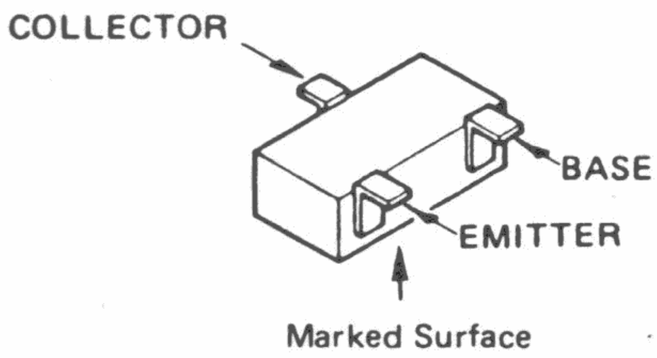

2SA1162GR (SG) : (Q1002,1012)
2SC2712GR (LG) : (Q1003,1004 1005,1006 1010)
FA1A4M (L33) : (Q1011,1013)

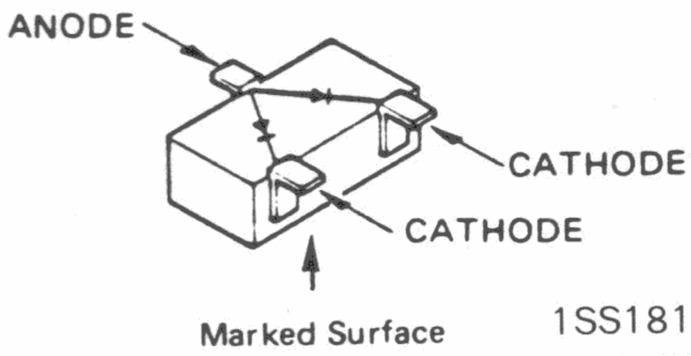

1SS181 (A3) : (D1001,1002,1008)

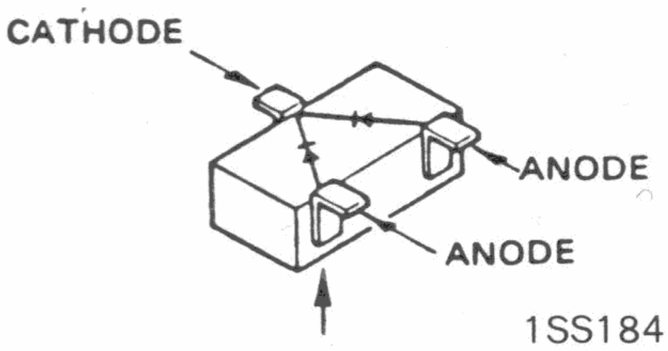

1SS184 (B3) : (D1007)
SLM-23VMW (D1006) (LED)

CNTL UNIT

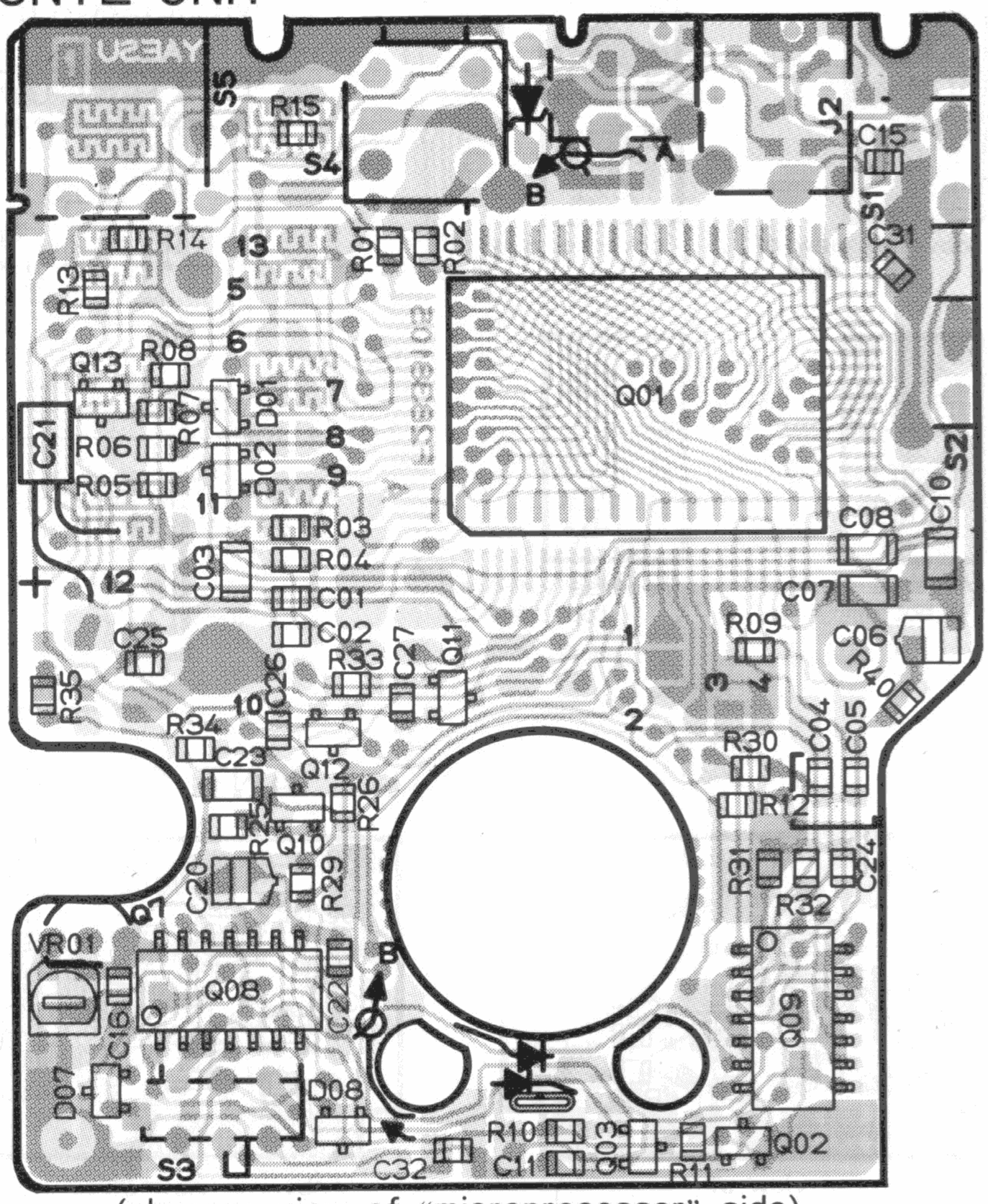

(obverse view of "microprocessor" side)

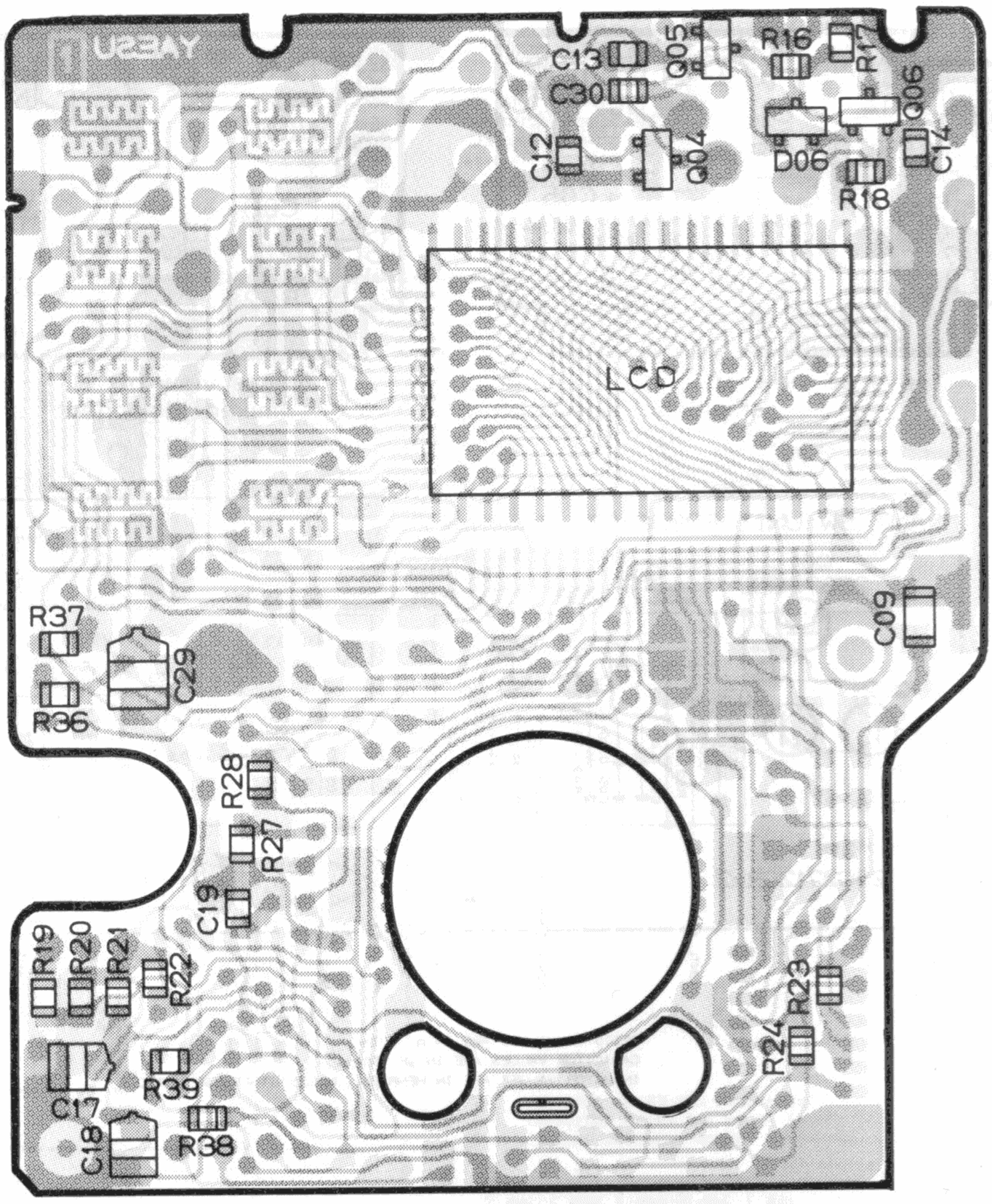

(reverse view of "display" side)

CNTL UNIT

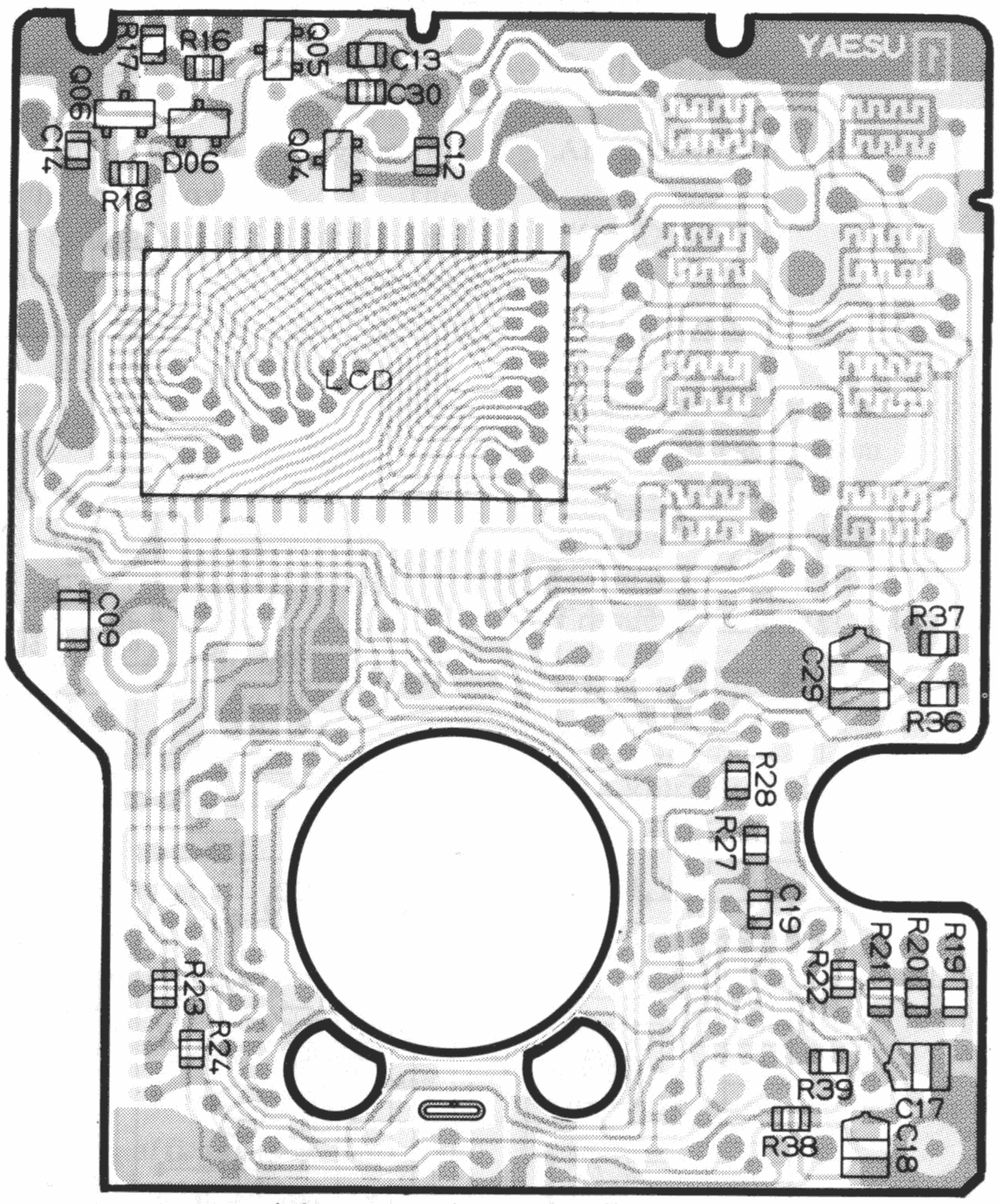

(obverse view of "display" side)

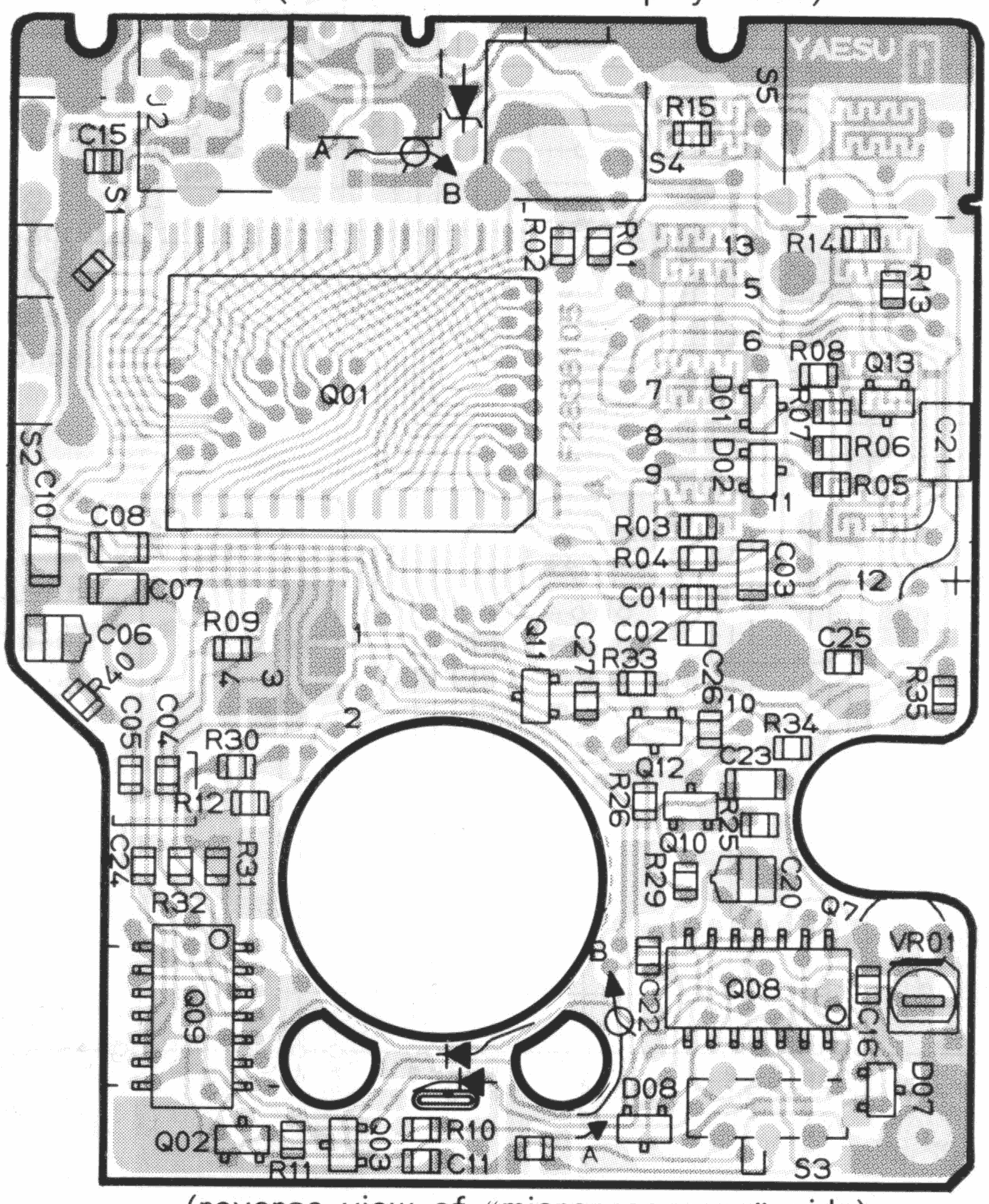

(reverse view of "microprocessor" side)

CNTL UNIT

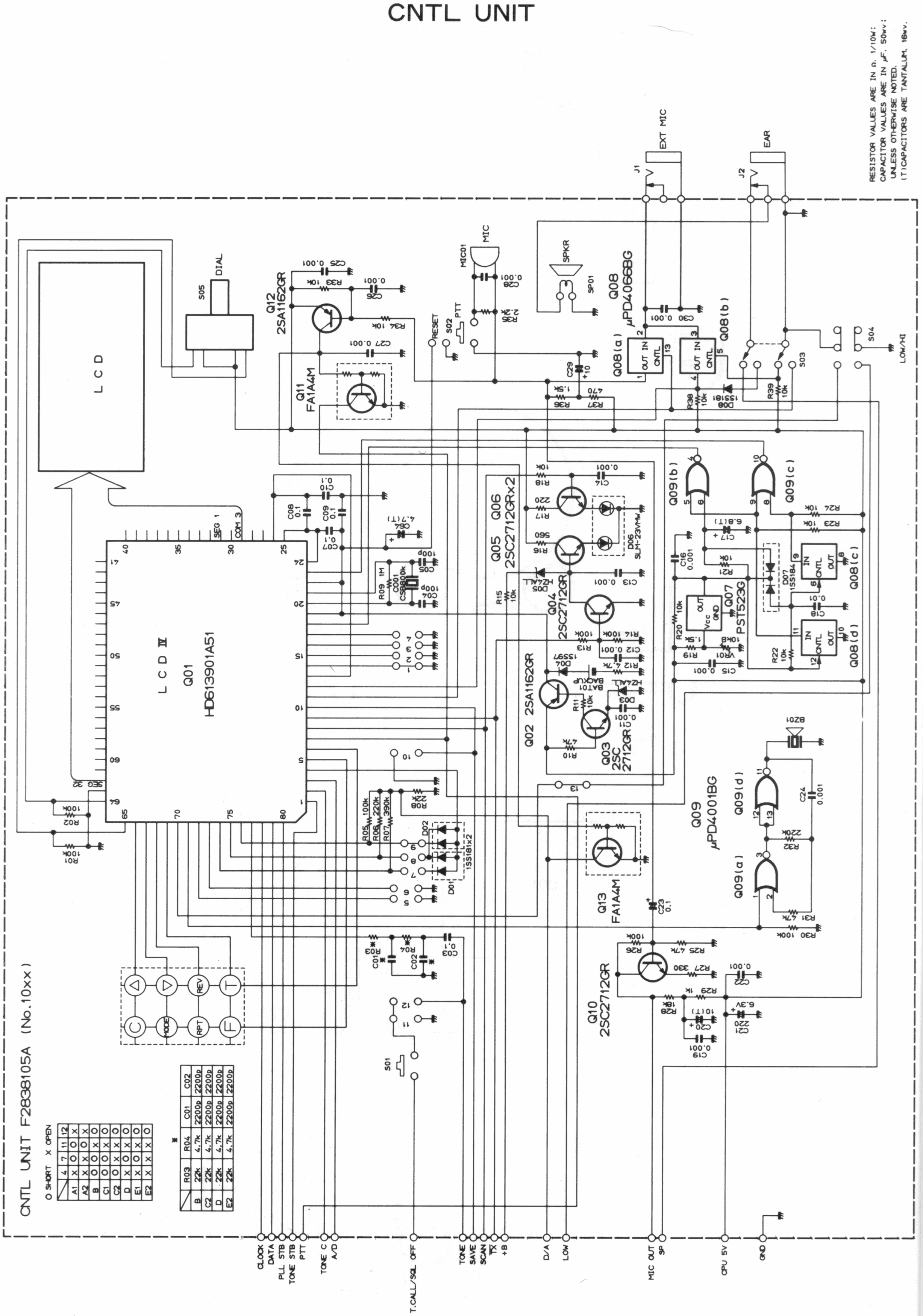
RESISTOR VALUES ARE IN Ω. 1/10W:
CAPACITOR VALUES ARE IN μF. 50wv:
UNLESS OTHERWISE NOTED.
(T)CAPACITORS ARE TANTALUM. 16wv.
CNTL UNIT F2838105A (No.10xx)
O SHORT X OPEN
LCD
LCD IV
Q01
HD613901A51
Q02 2SA1162GR
Q03 2SC2712GR
Q04 2SC2712GR
Q05 Q06 2SC2712GRx2
Q07 PST523G
Q08 μPD4066BG
Q09 μPD4001BG
Q10 2SC2712GR
Q11 FA1A4M
Q12 2SA1162GR
Q13 FA1A4M
EXT MIC
EAR
MIC
SPKR
DIAL
PTT
RESET
LOW/HI
CLOCK
DATA
PLL STB
TONE STB
PTT
TONE C
A/D
T.CALL/SQL OFF
TONE
SAVE
SCAN
TX
+B
D/A
LOW
MIC OUT
SP
CPU 5V
GND

ALIGNMENT

The FT-23R has been carefully aligned by highly skilled technicians at the factory, and is designed so that no further alignment should ever be required. However, in the unlikely event of a component failure, re-alignment may be necessary. All component replacement and service should be performed only by an authorized Yaesu representative, or the warranty policy may be voided.

The following test equipment is required for alignment:

RF Signal Generator:
calibrated output level at 150 MHz

Deviation Meter (linear detector)

Oscilloscope

AF Millivoltmeter

SINAD Meter

Inline Wattmeter: 150 MHz

Regulated DC Power Supply:
adjustable from 4 to 17V, 2A

50-ohm Non-reactive Dummy Load: 10W at 150 MHz

Frequency Counter: 0.2ppm accuracy at 150 MHz

AF Signal Generator

DC Voltmeter: high impedance

CASE DISASSEMBLY

1. Make sure the transceiver is off. Remove the hard or soft case, if used, and remove the battery pack.

2. Remove the four screws affixing the battery spring plate on the bottom of the transceiver, and carefully remove the plate.

3. Remove the four screws affixing the top panel, and carefully remove the panel.

4. Remove the two screws affixing the front and rear halves of the case, and gently separate the halves, using care not to stress the interconnecting wires.

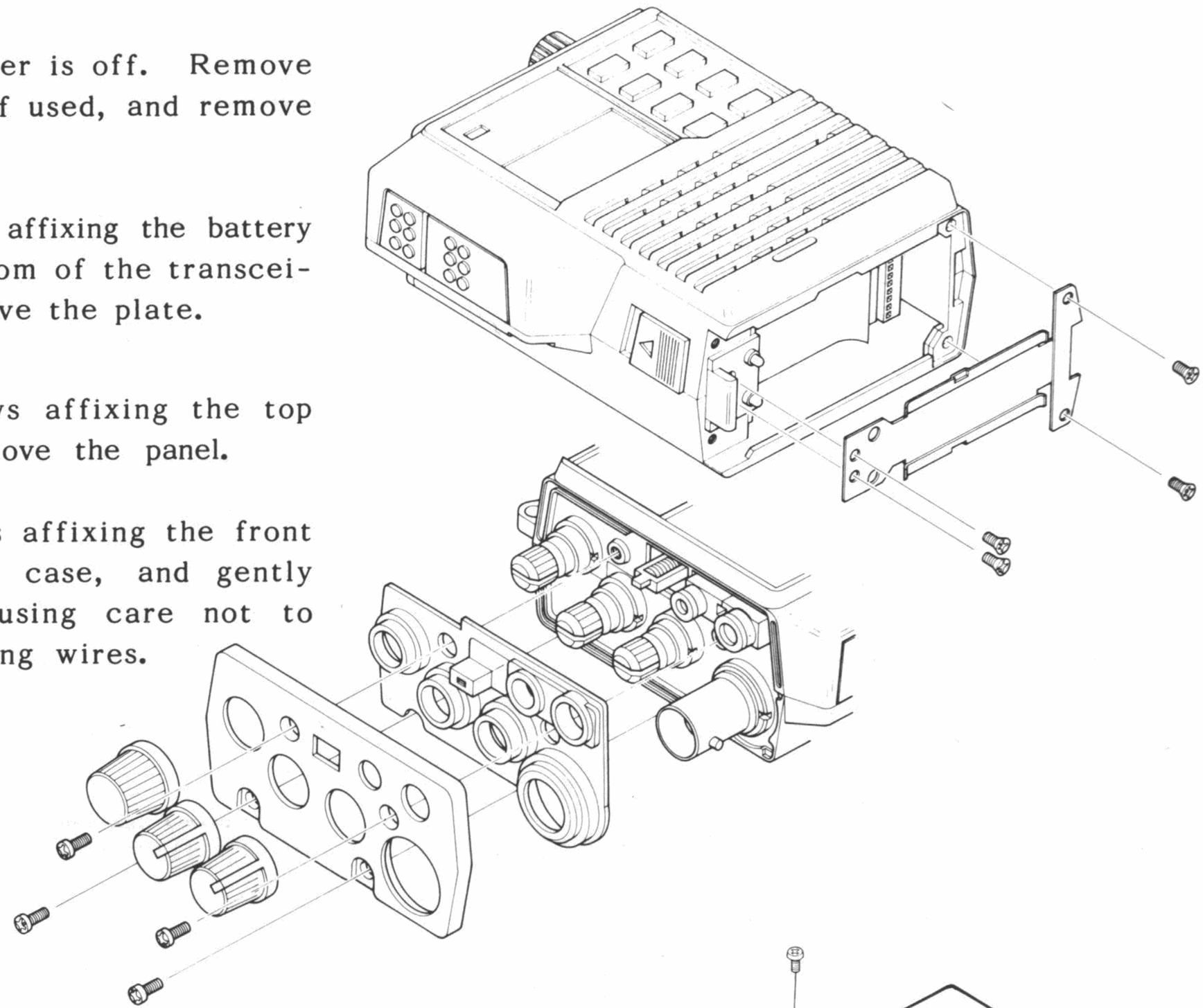

BOARD LAYOUT

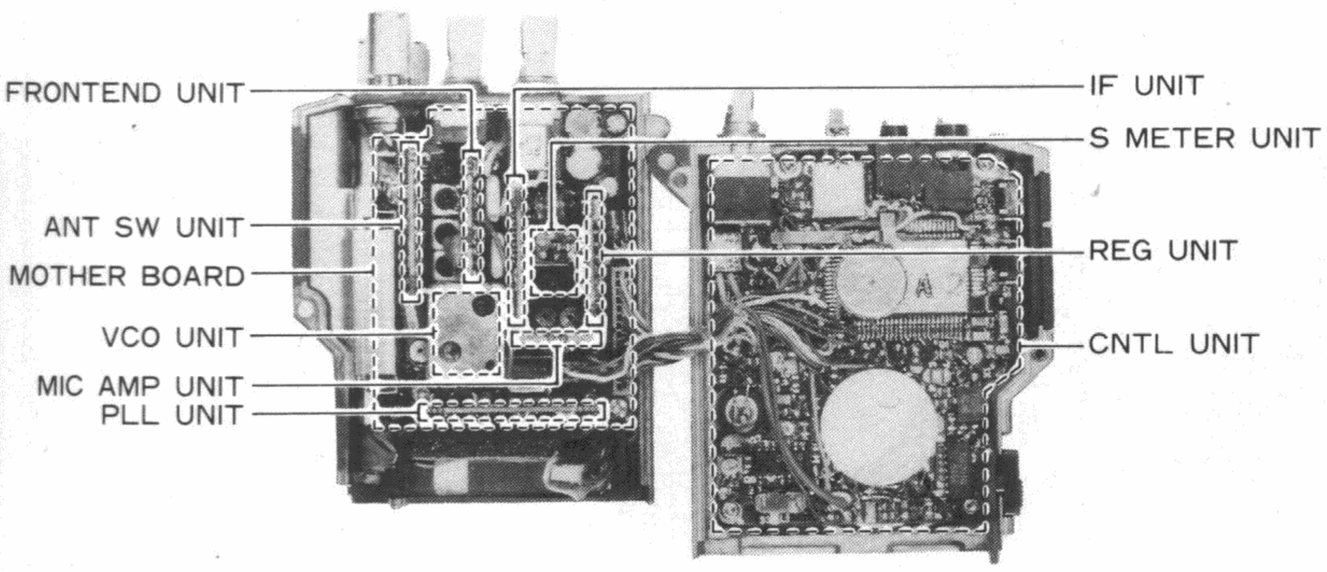

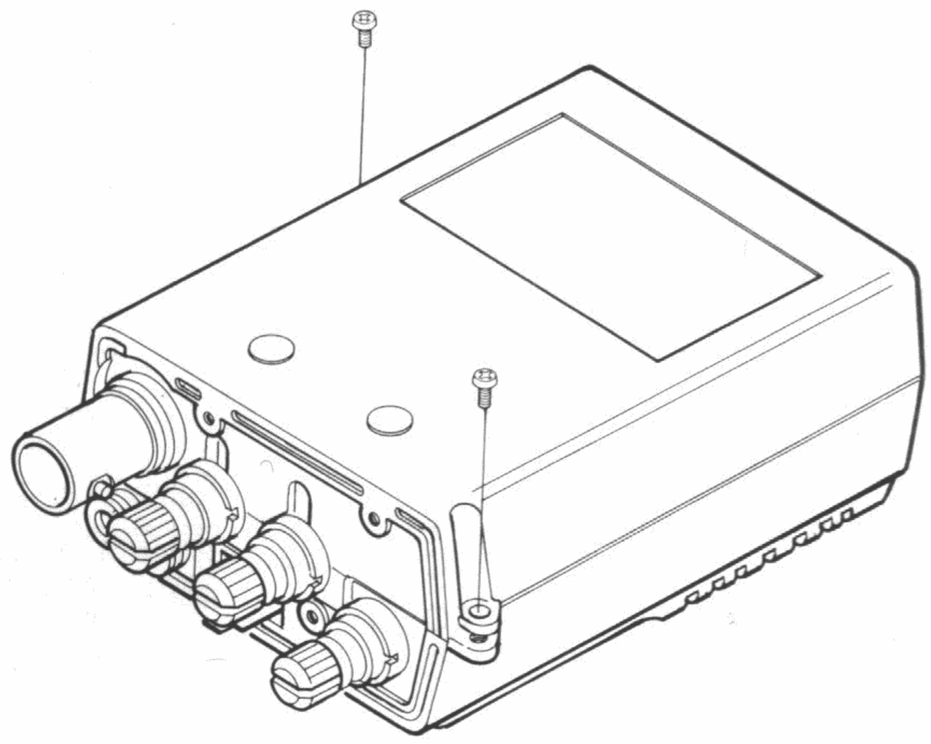

I. PLL & TRANSMITTER

Set up the test equipment as shown in the diagram below for transmitter alignment. Adjust the supply voltage to 12.0V for all steps except Transmitter Output Power alignment (B).

A. PLL VCV (Varactor Control Voltage)

(1) Connect the DC voltmeter between C416 on the PLL Unit and chassis ground.

(2) While transmitting on 144.000 MHz adjust transformer T501 on the VCO Unit for 1.35 ±0.05 VDC.

(3) While receiving on 144.000 MHz adjust trimmer TC501 on the VCO Unit for 1.1 ±0.05 VDC.

(4) Retune the transceiver and confirm the high-end VCV for the transceiver version being aligned, as follows:

Version	Frequency	Tx VCV	Rx VCV
A, C, E	148.000	<1.8V	<1.6V
B, D	146.000	<1.7V	<1.5V

PLL & TRANSMITTER ALIGNMENT SETUP

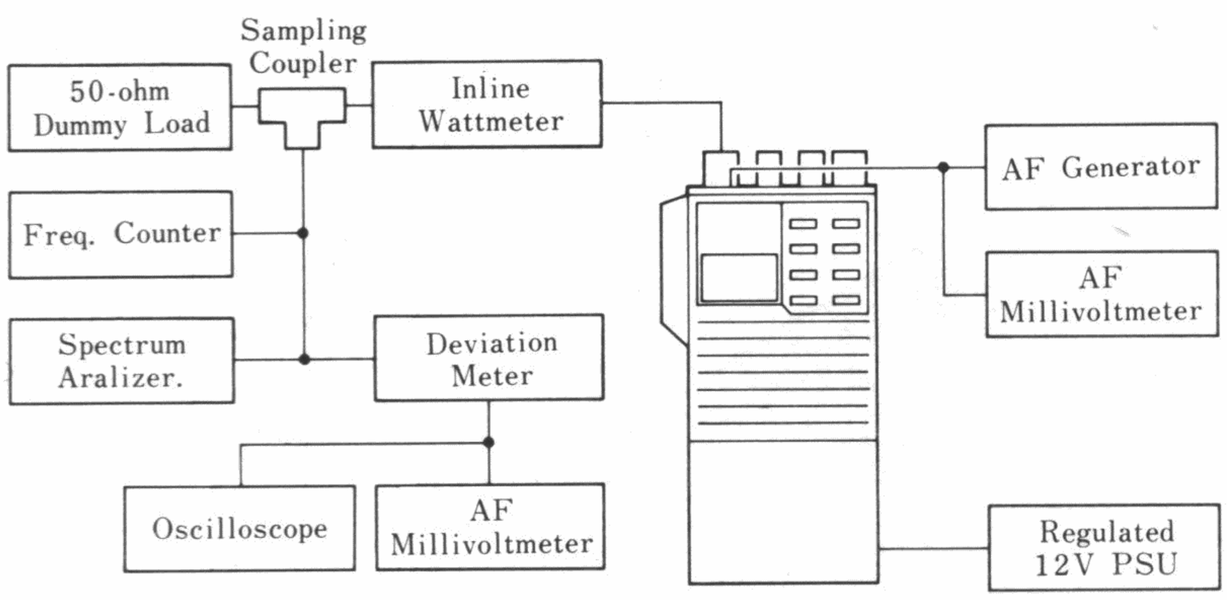

B. Transmitter Output Power

(1) Tune the transceiver to band center (145 or 146 MHz), and set the LOW switch to the undepressed position.

(2) Increase the supply voltage to 12.5V.

(3) Adjust TC101 on the Mother Board for peak output power on the wattmeter (at least 5W with less than 1.5A supply current).

(4) Press the LOW switch on the top panel, and adjust VR105 on the Mother Board for 0.5 watts output.

(5) Return the supply voltage to 12.0V.

C. PLL Reference Frequency

With the transceiver tuned to band center (145 or 146 MHz), adjust TC401 on the PLL Unit, if necessary, so that the display frequency matches the frequency counter when transmitting.

D. Modulation Level

(1) With the transceiver tuned to band center (145 or 146 MHz), adjust the AF generator for 25mV output at 1 kHz to the MIC jack.

(2) Adjust VR104 on the Mother Board for ±4.5 kHz deviation on the deviation meter.

PLL & TRANSMITTER ALIGNMENT POINTS

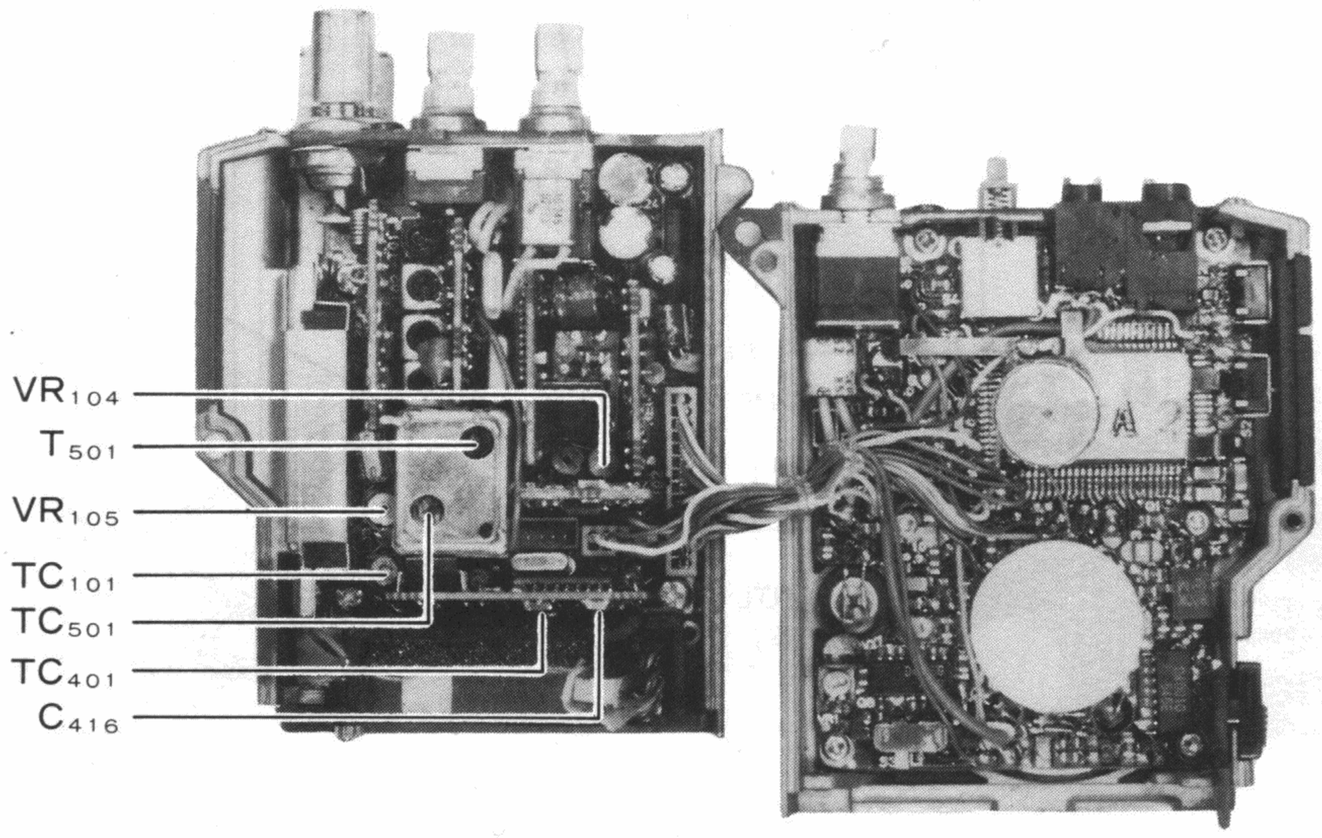

II. RECEIVER

Set up the test equipment as shown above for receiver alignment.

A. Sensitivity

(1) With the transceiver and RF signal generator both tuned to band center (145 or 146 MHz), set the generator for ±3.5 kHz deviation of 1 kHz tone modulation, and set the output level for 40 dBu at the antenna jack.

(2) Preset VR103 on the Mother Board fully clockwise.

(3) Adjust T101 through T104 on the Mother Board for maximum S-meter indication, reducing the generator level if more than four bargraph segments turn on.

After step (3), generator level should be 0.2 uV or less for 12dB SINAD. Perform the following adjustment next.

B. S-meter Sensitivity

(1) With the transceiver and RF signal generator set up as in step (1) of the above Sensitivity adjustment procedure, set the signal generator for 20 dBu output.

(2) Adjust VR103 on the Mother Board so that all bargraph segments are just turned on.

(3) Reduce the generator output so that only two bargraph segments are on, and confirm that the generator output level is now 5 dBu or less.

RECEIVER ALIGNMENT SETUP

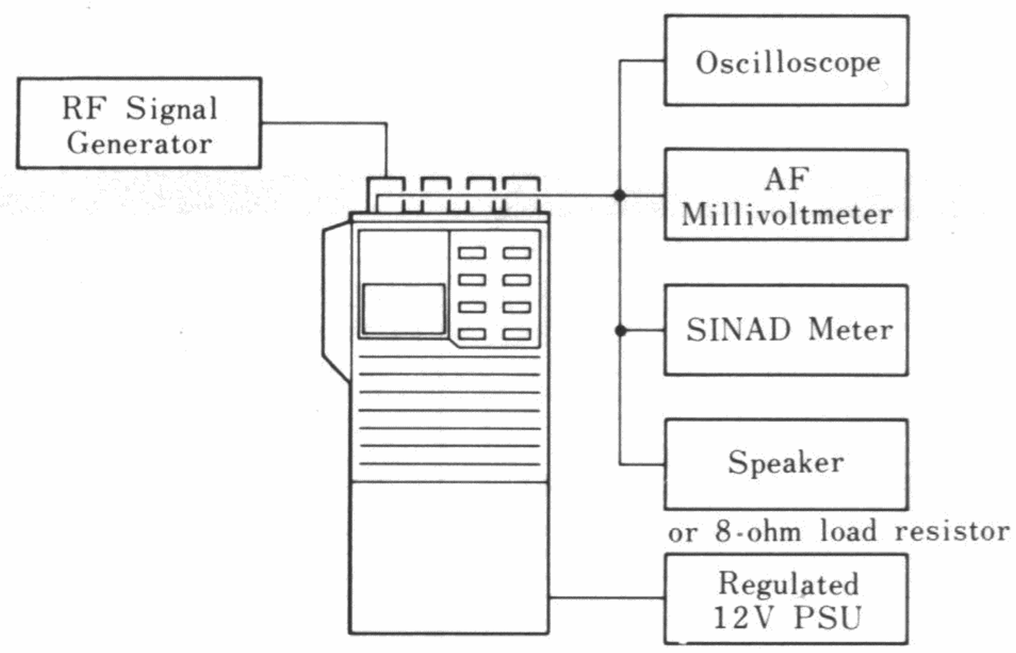

RECEIVER ALIGNMENT POINTS

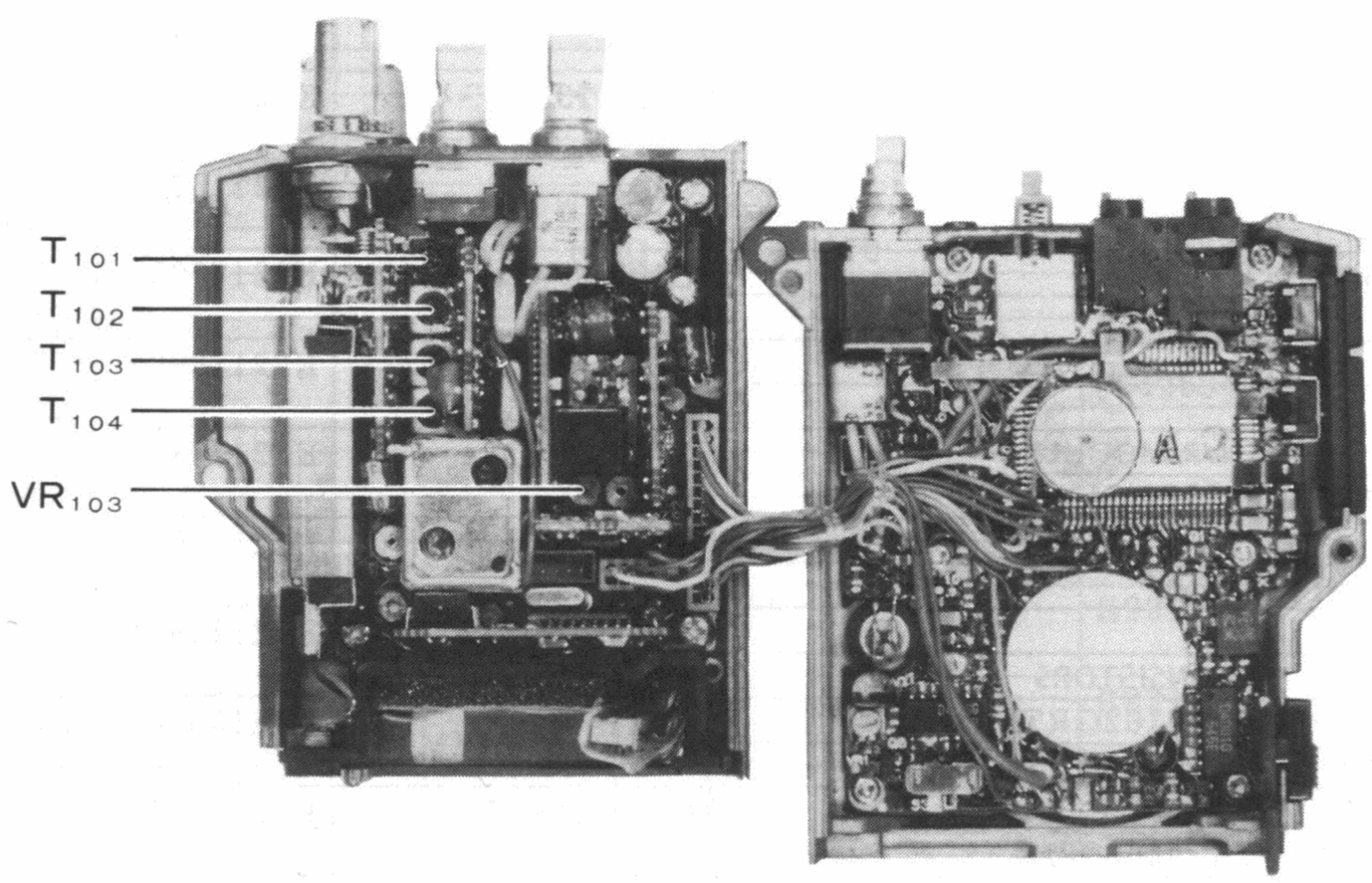

PARTS LIST

MAIN CHASSIS

Symbol No.	Part No.	Name & Description
		CONNECTOR
J01	P1090541	BNC-RM ANT
		MISCELLANEOUS
	R3116390	DIAL Knob
	R3116620	VOL,SQL Knobs
	R3508300	PTT Button Cover
	R3508310	UNLOCK Lever
	R0117370	Coil Spring
	R0507950B	Battery Spring Plate
	R3503650A	Top Panel Gasket
	R3507960	Jack Seal Gasket

MOTHER BOARD

Symbol No.	Part No.	Name & Description
	F2838104A	Printed Circuit Board
	C028384AA	PCB with Components
		IC
Q101	G1090558	LA4145
		PWR-MODULE
Q107	G1090732	M57796MA
		TRANSISTORS
Q102	G3111627G	2SA1162GRTE85R
Q103	G3327127G	2SC2712GRTE85R
Q104	G3070001	FA1A4M
Q105	G3333567	2SC3356-T2B
Q106	G3329547	2SC2954-T2B
		DIODE
D101	G2070009	1SS184TE85R Si
		CRYSTAL FILTER
XF101	H1102114	10M15BM 10.7MHz
		CERAMIC FILTER
CF101	H3900280	LF-B12
		RESISTORS
R112	J24205479	RMC 1/10T4R7J 1/10W 4.7Ω
R113	J24205100	" " 100J " 10Ω
R102	J24205220	" " 220J " 22Ω
R106,109	J24205221	" " 221J " 220Ω
R110	J24205331	" " 331J " 330Ω
R111	J24205102	" " 102J " 1kΩ
R114	J24205103	" " 103J " 10kΩ
R107,118A,F	J24205223	" " 223J " 22kΩ
R116	J00215223	Carbon film 1/8W 22kΩ
R101	J24205333	RMC 1/10T333J 1/10W33kΩ
R108,115	J24205473	" " 473J " 47kΩ
R103-105,117	J24205104	" " 104J " 100kΩ
		POTENTIOMETERS
VR101	J60800128	K091K0004-20KB 20kΩ B
VR102	J60800129	K0911100D-20KA 20kΩ A
VR103-105	J51776473	RH0411CS4J 47kΩ B
		CAPACITORS
C104-106	K22170203	Chip Ceramic 50WV 2pF CH (C2012CH1H020CFA)
C107	K22170204	" " " 3pF " (C2012CH1H030CFA)
C101,108	K22170206	" " " 5pF " (C2012CH1H050CFA)
C130,133	K22170209	" " " 8pF " (C2012CH1H080DFA)
C143	K22170211	" " " 10pF " (C2012CH1H100DFA)
C103	K22170221	" " " 27pF " (C2012CH1H270JFA)
C111,122,125-127 131,135-141	K22170805	" " " 0.001μF B (C2012B1H102MFA)
C102,132,134	K22170817	" " " 0.01μF " (C2012B1H103MFA)
C128,142	K22171008	" " " 0.047μF F (C2012F1H473ZFA)
C109,110,112,115 119,120,129	K22141904	" " 25WV 0.1μF D (C3216D1E104MFA)
C121	K78130001	Tantalum 20WV 0.47μF (F951D474MRAAF1Q2)
C113,118,123	K40129052	Electrolytic 16WV 10μF (RC3-16V100M)
C114,124	K40129038	" " 16WV 100μF (RC2-16V101M)
C116,117	K40089020	" " 6.3WV 100μF (RC3-6V101M)
		TRIMMER CAPACITOR
TC101	K91000149	VCT31E161A 20pF

		TRANSFORMERS
T101	L0021416	145MHz
T102-104	L0021418	"
		INDUCTORS
L101,102	L1190275	LAL02NAR22M 0.22μH
L103	L1020671	
		CONNECTORS
J101	P0090599	IL-Y-5P-S15T2-EF
J102	P0090601	IL-Y-14P-S15T2-EF
J103	P0090598	IL-Y-4P-S15T2-EF
P101(with wire)	T9205436	

FRONT END UNIT

Symbol No.	Part No.	Name & Description
	F2838111A	Printed Circuit Board
	C02838BAA	PCB with Components
		FETS
Q201,202	G3803027Y	2SK302YTE85R
		DIODES
D201-203	G2090248	1T32 Varactor
		RESISTORS
R201	J24205560	RMC 1/10T 560J 1/10W 56Ω
R206,209,210	J24205101	" " 101J " 100Ω
R207	J24205471	" " 471J " 470Ω
R202-204	J24205104	" " 104J " 100kΩ
R205	J24205474	" " 474J " 470kΩ
		CAPACITORS
C202,203,205,207	K22170221	Chip Ceramic 50WV 27pF CH (C2012CH1H270JFA)
C201,210	K22170805	" " " 0.001μF B (C2012B1H102MFA)
C206,209	K22170817	" " " 0.01μF " (C2012B1H103MFA)
C208	K22171008	" " " 0.047μF F (C2012F1H473ZFA)
C204	K22141904	" " 25WV 0.1μF D (C3216D1E104MFA)
		INDUCTORS
L201	L1190292	LAL02NA5R6K 5.6μH
L202	L1190289	LAL02NA3R3K 3.3μH

IF UNIT

Symbol No.	Part No.	Name & Description
	F2838102	Printed Circuit Board
	C028382AA	PCB with Components
		IC
Q302	G1090698	TK10420M
		TRANSISTOR
Q301	G3326207B	2SC2620QBTR
		DIODES
D301,302	G2070007	1SS226TE85L Si
		CRYSTAL
X301	H0102773	UM-1 10.245MHz
		CERAMIC DISCRIMINATOR
CD301	H7900260	D455C
		RESISTORS
R305	J24205101	RMC 1/10T101J 1/10W100Ω
R304	J20205471	" " 471J " 470Ω
R311	J24205152	" " 152J " 1.5kΩ
R301,307,308	J24205222	" " 222J " 2.2kΩ
R314	J24205392	" " 392J " 3.9kΩ
R315	J24205472	" " 472J " 4.7kΩ
R313	J24205682	" " 682J " 6.8kΩ
R309,316	J24205103	" " 103J " 10kΩ
R303,310	J24205473	" " 473J " 47kΩ
R306	J24205823	" " 823J " 82kΩ
R302	J24205224	" " 224J " 220kΩ
R312	J24205474	" " 474J " 470kΩ
		CAPACITORS
C303	K22170213	Chip Ceramic 50WV 12pF CH (C2012CH1H120JFA)
C304,310	K22170229	" " " 56pF " (C2012CH1H560JFA)
C305	K22170237	" " " 120pF " (C2012CH1H121JFA)
C309	K22170239	" " " 150pF " (C2012CH1H151JFA)
C315	K22170243	" " " 220pF " (C2012CH1H221JFA)
C302,306,314	K22170805	" " " 0.001μF B (C2012B1H102MFA)
C301,312,317	K22170817	" " " 0.01μF " (C2012B1H103MFA)
C307,308,313	K22141904	" " 25V 0.1μF D (C3216D1E104MFA)
C316,318	K78120013	Chip Tantalum 10WV 1μF (F951C105MRAAF1Q2)

C311	K78080004	Chip Tantalum 6.3W 15μF (F950J156MVCAF1Q2)
		INDUCTOR
L301	L1190344	LAL02KR100K 10μH

PLL UNIT

Symbol No.	Part No.	Name & Description
	F2838108A	Printed Circuit Board
	C028388AA	PCB with Components
		Model A1,A2,D,E2 5kHz steps
	C028388AB	" " "
		Model F 10kHz steps
	C028388AC	" " "
		Model B,C2 12.5kHz steps
		ICs
Q401	G1090725	MC12017P
Q402	G1090582	JLC1007P
		DIODE
D401	G2090118	1SS97 Schottky
		CRYSTAL
X401•*	H0102771	UM-1 10.240MHz
X401■	H0102772	UM-1 12.800MHz
		RESISTORS
R408	J24205000	RMC 1/10T 000J 1/10W 0Ω
R402,403	J24205220	" " 220J " 22Ω
R404,405,407	J24205222	" " 222J " 2.2kΩ
R406■	J24205472	" " 472J " 4.7kΩ
R401,406*	J24205103	" " 103J " 10kΩ
R406•	J24205153	" " 153J " 15kΩ
		CAPACITORS
C401	K22170206	Chip Ceramic 50WV 5pF CH (C2012CH1H050CFA)
C411,412	K22170227	" " " 47pF " (C2012CH1H470JFA)
C408-410,419	K22170235	" " " 100pF " (C2012CH1H101JFA)
C402,403,405,407 413-415	K22170805	" " " 0.001μF B (C2012B1H102MFA)
C416,417	K22141904	" " 25WV 0.1μF D (C3216D1E104MFA)
C404,406,420	K78080002	Chip Tantalum 6.3WV 4.7μF (F950J475MSAAF1Q2)
C418	K78100003	" " 10WV 6.8μF (F951A685MTAAF1Q2)

		TRIMMER CAPACITOR
TC401	K91000154	ECR-KN020E11X 20pF
		INDUCTORS
L401	L1190311	LAL02NA221K 220μH

VCO UNIT

Symbol No.	Part No.	Name & Description
	F2838106	Printed Circuit Board
		VCO-LC
	F2838110	" " "
		VCO-OSC
	C028386AF	PCB with Components
		FET
Q501	G3802387S	2SK238-K17
		TRANSISTOR
Q502	G3327597C	2SC2759-T2B U23
		DIODES
D501	G2090297	1SS110 Si
D502,503	G2090271	1T33 Varactor
		RESISTORS
R504	J24205470	RMC 1/10T 470J 1/10W 47Ω
R505	J24205101	" " 101J " 100Ω
R501	J24205682	" " 682J " 6.8kΩ
R506	J24205683	" " 683J " 68kΩ
R503	J24205224	" " 224J " 220kΩ
R502	J24205225	" " 225J " 2.2MΩ
		CAPACITORS
C508	K22170201	Chip Ceramic 50WV 0.5pF CH (C2012CH1HOR5CFA)
C503	K22170211	" " " 10pF " (C2012CH1H100DFA)
C506,507	K22170311	" " " " UJ (C2012UJ1H100DFA)
C501	K22170215	" " " 15pF CH (C2012CH1H150JFA)
C502,505,510	K22170805	" " " 0.001μF B (C2012B1H102MFA)
C509	K78080002	Chip Tantalum 6.3WV 4.7μF (F950J475MSAAF1Q2)
C504	K78080003	" " " 10μF (F950J106MTAAF1Q2)

• Model A1,A2,D,E2
■ Model B,C2

		TRIMMER CAPACITOR
TC501	K91000152	ECR-JA040G12X
		INDUCTORS
L501-503	L1190283	LAL02NA1R0M 1μH
L504	L1190342	LAL02KRR22M 0.22μH
		TRANSFORMER
T501	L0021684A	R12-E991X 150MHz
		TEST POINTS
TP	Q5000082	IPS-1091-01
	R0116640	SHIELD CASE
	R0117100	SHIELD TOP

REG UNIT

Symbol No.	Part No.	Name & Description
	F2838109A	Printed Circuit Board
	C028389AA	PCB with Components
		IC
Q604	G1090736	LVC550C-2
		TRANSISTORS
Q601	G3207997L	2SB799ML
Q602,603,608	G3327127G	2SC2712GRTE85R
Q605-607	G3111627G	2SA1162GRTE85R
		DIODES
D601,604	G2090027	1SS53 Si
D602	G2090183	HZ9A2L Zener
D603	G2070009	1SS184TE85R Si
		RESISTORS
R602	J01245829	Carbon film 1/4W 8.2Ω TJ
R601	J24205101	RMC 1/10T101J 1/10W 100Ω
R608	J24205222	" " 222J " 2.2kΩ
R606,607,612	J24205472	" " 472J " 4.7kΩ
R605,611	J24205103	" " 103J " 10kΩ
R603	J24205223	" " 223J " 22kΩ
R604,609,610	J24205104	" " 104J " 100kΩ
		CAPACITORS
C601,603,604 606,608-613	K22170805	Chip Ceramic 50WV 0.001μF B (2012B1H102MFA)
C605	K78120002	Chip Tantalum 16WV 2.2μF (F951C225MSAAF1Q2)
C602	K78100003	Chip Tantalum 10WV 6.8μF (F951A685MTAAF1Q2)
C607	K78080003	" " 6.3WV 10μF (F950J106MTAAF1Q2)

MIC AMP UNIT

Symbol No.	Part No.	Name & Description
	F2838101	Printed Circuit Board
	C028381AA	PCB with Componnents Model A1,A2,F
	C028381AB	" " " Model B,C2,D,E2
		IC
Q701	G1090726	M5224FP
		RESISTORS
R705	J24205332	RMC 1/10T332J1/10W3.3kΩ
R710	J24205562	" " 562J " 5.6kΩ
R701*,702*,709 711-713	J24205103	" " 103J " 10kΩ
R704*,715	J24205223	" " 223J " 22kΩ
R708	J24205333	" " 333J " 33kΩ
R707	J24205563	" " 563J " 56kΩ
R716	J24205104	" " 104J " 100kΩ
R703,714	J24205225	" " 225J " 2.2MΩ
R706	J24205335	" " 335J " 3.3MΩ
		CAPACITORS
C705,708,710,711 713,714	K22170805	Chip Ceramic 50WV 0.001μF B (C2012B1H102MFA)
C703*	K22170809	" " " 0.0022μF " (C2012B1H220MFA)
C702*,703•,709	K22170817	" " " 0.01μF B (C2012B1H103MFA)
C706	K22171008	" " " 0.047μF " (C2012B1H473ZFA)
C701*,704*,707 712	K22141904	" " " 0.1μF D (C3216D1E104MFA)

S METER UNIT

Symbol No.	Part No.	Name & Description
	F2838103	Printed Circuit Board
	C028383AA	PCB with Components
		TRANSISTORS
Q801,802	G3327127G	2SC2712GRTE85R

• Model A1,A2,F
* Model B,C2,D,E2

		DIODES
D801,802	G2090029	1N60 Ge
		RESISTORS
R802	J24205102	RMC 1/10T102J 1kΩ
R804	J01245102	Carbon film 1/4W 1kΩ
R801,803	J24205104	RMC 1/10T104J 100kΩ
		CAPACITORS
C801	K22170801	Chip Ceramic 50WV 470pF B (C2012B1H471MFA)
C802,803	K22170817	" " " 0.01μF " (C2012B1H103MFA)

ANT SW UNIT

Symbol No.	Part No.	Name & Description
	F2838107A	Printed Circuit Board
	C028387AA	PCB with Components
		TRANSISTORS
Q901,905	G3207997L	2SB799ML
Q902-904	G3327127G	2SC2712GRTE85R
		DIODES
D901,902	G2090027	1SS53 Si
D903	G2070007	1SS226TE85R "
		RESISTORS
R905	J24205221	RMC 1/10T221J 1/10W 220Ω
R903	J24205471	" " 471J " 470Ω
R901,904,906	J24205222	" " 222J " 2.2kΩ
R902	J24205473	" " 473J " 47kΩ
		CAPACITORS
C916	K22170207	Chip Ceramic 50WV 6pF CH (C2012CH1H060DFA)
C914	K22170209	" " " 8pF " (C2012CH1H080DFA)
C917	K22170217	" " " 18pF " (C2012CH1H180JFA)
C913,915	K22170223	" " " 33pF " (C2012CH1H330JFA)
C901,903,905 907-912	K22170805	" " " 0.001μF B (C2012B1H102MFA)
C904	K40179033	Electrolytic " 0.47μF (RC3-50VR47M)
C902,906	K40129052	" 16WV 10μF (RC3-16V100M)

		INDUCTORS
L901	L1190344	LAL02KR100K 10μH
L902, L904	L0021683	
L903	L0021682	
		TERMINAL POSTS
TP901	Q5000016	TP-E/MS-60124

CNTL UNIT

Symbol No.	Part No.	Name & Description
	F2838105A	Printed Circuit Board
	C028385AA	PCB with Components Model F
	C028385AB	" " " Model A1, A2
	C028385AC	" " " Model B, C2, D, E2 w/o BAT1001
		ICs
Q1001	G1090741	HD613901A51
Q1007	G1090752	PST523G
Q1008	G1090602	μPD4066BG
Q1009	G1090601	μPD4001BG
		TRANSISTORS
Q1002,1012	G3111627G	2SA1162GRTE85R
Q1003-1006,1010	G3327127G	2SC2712GRTE85R
Q1011,1013	G3070001	FA1A4M
		DIODES
D1001,1002,1008	G2070001	1SS181TE85R Si
D1003,1005	G2090334	HZ4ALL Zener
D1004	G2090118	1SS97 Schottky
D1006	G2070028	SLM-23VMW T-97 LED
D1007	G2070009	1SS184TE85R Si
		LIQUID CRYSTAL DISPLAY
DS1001	G6090060	LR-541C
		CERAMIC RESONATOR
X1001	H7900270	CSB800K

		RESISTORS
R1017	J24205221	RMC 1/10T221J 1/10W 220Ω
R1027	J24205331	" " 331J " 330Ω
R1037	J24205471	" " 471J " 470Ω
R1016	J24205561	" " 561J " 560Ω
R1029	J24205102	" " 102J " 1kΩ
R1019, 1036	J24205152	" " 152J " 1.5kΩ
R1035	J24205222	" " 222J " 2.2kΩ
R1004*,1012,1020 1038	J24205472	" " 472J " 4.7kΩ
R1011, 1015,1018 1021-1024,1033 1034,1039	J24205103	" " 103J " 10kΩ
R1028	J24205183	" " 183J " 18kΩ
R1003*,1008	J24205223	" " 223J " 22kΩ
R1010,1025,1031	J24205473	" " 473J " 47kΩ
R1001,1002,1005 1013,1014,1026 1030	J24205104	" " 104J " 100kΩ
R1006,1032	J24205224	" " 224J " 220kΩ
R1007	J24205394	" " 394J " 390kΩ
R1009	J24205105	" " 105J " 1MΩ
		POTENTIOMETER
VR1001	J51771103	RVG4F03103-TG 10kΩ
		CAPACITORS
C1004,1005	K22170235	Chip Ceramic 50WV 100pF CH (C2012CH1H101MFA)
C1011-1016,1019 1022,1024-1027 1030	K22170805	" " " 0.001μF B (C2012B1H102MFA)
C1028	K10176102	Ceramic disc " 0.001μF " (DD104B102K50)
C1001,1002	K22170809	Chip Ceramic " 0.0022μF " (C2012B1H222MFA)
C1018	K22170817	" " " 0.01μF " (C2012B1H103MFA)
C1003,1007-1010 1023	K22141904	" " 25WV 0.1μF D (C3216D1E104MFA)
C1006	K78080002	" " 6.3WV 4.7μF (F950J475MSAAF1Q2)
C1017	K78100003	" " 10WV 6.8μF (F951A685MTAAF1Q2)
C1020,1029	K78080003	" " 6.3WV 10μF (F950J106MTAAF1Q2)
C1021	K40089010	Electrolytic " 220μF (RC2-6V221M)
		CONNECTORS
P1001•	T9205433	
P1001*	T9205434	
P1002•	T9205432	
P1002*	T9205435A	
		BUZZER
BZ1001	M4290001	EFBRE-25D02

		SPEAKER
SP1001	M4090063	T036S13Y2611
		MIC
MIC1001	M3290008	EM-78CYE
		SWITCHES
S1001,1002	N5090018	KHH15951 SQL, OFF•, BURST*, PTT
S1003	N6090063	SSSS22050A
S1004	N4090088	SPJ622N09 HI/LO
S1005	N0190139	SRBMIL066 DIAL
		CONNECTORS
J1001	P1090369	HSJ0838-01-010 MIC
J1002	P1090370	HSJ0836-01-010 EAR
		LITHIUM BATTERY
BAT1001	Q9000366	CR2025
		RUBBER CONDUCTOR
	S2000026	24.3x1.8x1 SS

ACCESSORIES*

Symbol No.	Part No.	Name & Description
		ANTENNA
	Q3000049	YHA-16
	S6000098	HAND STRAP
		BATTERY PACK*
	D3000493	FNB-10
		VINYL SOFT CASE*
	D3000477	CSC-23 u/w FNB-10
	D3000504	CSC-25 u/w FNB-10, FTT-4

* Optional same models

• Model A1,A2,F
* Model B,C2,D,E2

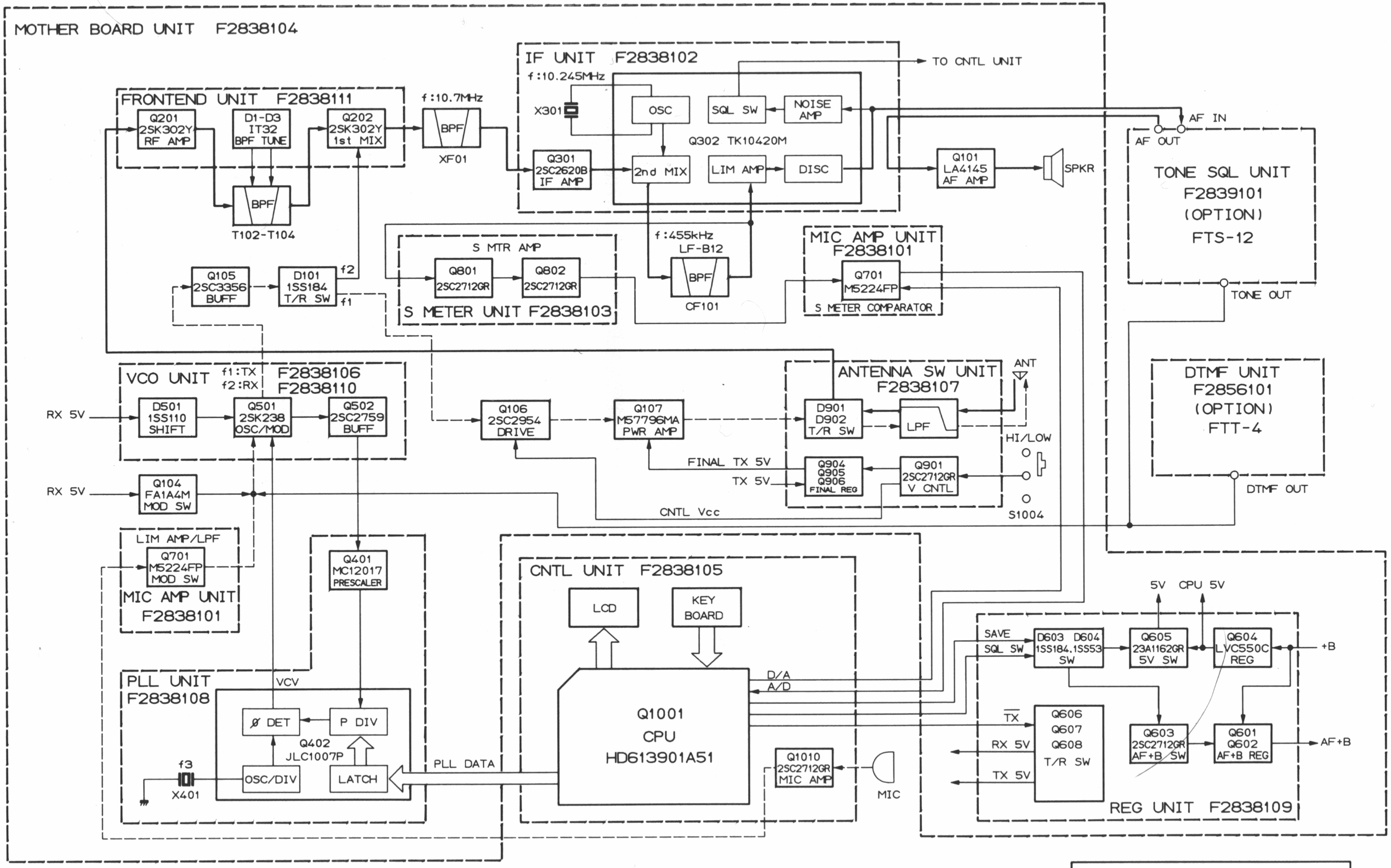

	A1.C1.G1	A2.C2.E2	B.D
f1	144-148MHz	140-160MHz	144-146MHz
f2	133.3-137.3MHz	129.3-149.3MHz	133.3-135.3MHz

	A1.A2.D.E1.E2	B.C1.C2
f3	10.240MHz	12.8MHz

RECEIVE
TRANSMIT
COMMON/CNTL

FT-23R BLOCK DIAGRAM

Late Model FT-23R

CONTENTS

MOTHER BOARD 2-1
IF UNIT 2-4
PLL UNIT 2-5
VCO UNIT 2-6
REG UNIT 2-7
MIC AMP UNIT 2-8
ANT SW UNIT 2-8
CNTL UNIT 2-9
DUMMY UNIT 2-12
ALIGNMENT 2-13
BLOCK DIAGAM 2-16
PARTS LIST 2-17
EXPLODED VIEW 2-32