HF TRANSCEIVER

TS-950SDX

SERVICE MANUAL

KENWOOD

© 1992-3 PRINTED IN JAPAN
B51-8158-00(O)997

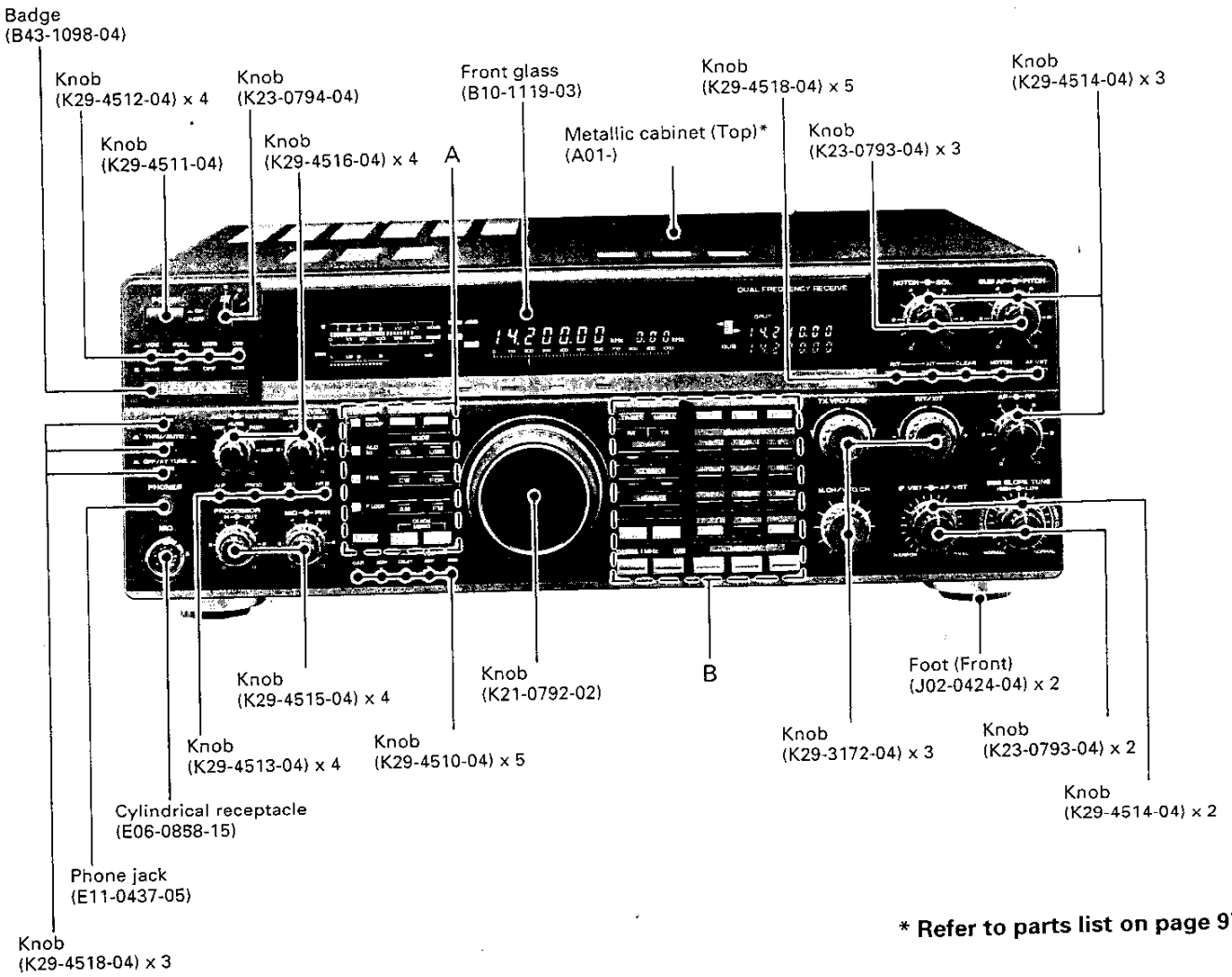

* Refer to parts list on page 97.

A

Knob (K29-3173-04)	Knob (K29-3192-23)	Knob (K29-3193-23)
Knob (K29-3173-04)	Knob (K29-3194-03)	Knob (K29-3195-03)
Knob (K29-3173-04)	Knob (K29-3196-03)	Knob (K29-3197-03)
Knob (K29-3173-04)	Knob (K29-3198-03)	Knob (K29-3199-03)
Knob (K29-3191-23)	Knob (K29-4792-03)	Knob (K29-4791-03)

B

Knob (K29-3189-23)	Knob (K29-4763-13)	Knob (K29-3186-23)	Knob (K29-3187-23)	Knob (K29-4764-13)
Knob (K29-3200-03)	Knob (K29-3200-03)	Knob (K29-3175-23)	Knob (K29-3176-23)	Knob (K29-3177-23)
Knob (K29-3200-03)	Knob (K29-3200-03)	Knob (K29-3178-23)	Knob K29-3179-23)	Knob (K29-3180-23)
Knob (K29-3200-03)	Knob (K29-3200-03)	Knob (K29-3181-23)	Knob (K29-3182-23)	Knob (K29-3183-23)
Knob (K29-4502-03)	Knob (K29-4765-03)	Knob (K29-3184-23)	Knob (K29-3174-23)	Knob (K29-3185-23)
Knob (K29-4508-04)	Knob (K29-4509-04)	Knob (K29-4505-04)	Knob (K29-4506-04)	Knob (K29-4507-04)

TS-950SDX

CONTENTS

CIRCUIT DESCRIPTION
- Units for Destination 3
- Accessories 3
- Overview 4
- Frequency Configuration 4
- PLL Circuit 5
- Receiver Circuit Configuration 14
- Transmitter Circuit Configuration 25
- AT Unit 31
- Standby Control and Timing 34
- Voice Memory Operation 40
- Final Unit 41
- DSP Unit 41
- Digital Control Unit 46
- AVR unit 62

DESCRIPTION OF COMPONENTS 63
SEMICONDUCTOR DATA 83
PARTS LIST 97
EXPLODED VIEW 182
PACKING 188
ADJUSTMENT 189
TERMINAL FUNCTION 207
PC BOARD VIEWS / CIRCUIT DIAGRAMS
- AVR UNIT (X43-3070-01) 219
- RF UNIT (X44-3140-00) 223
- FINAL UNIT (X45-3450-00) 227
- DIGITAL UNIT (X46-313X-XX) 230
- IF UNIT (X48-3100-00) 238
- AF UNIT (X49-3050-00) 243
- PLL UNIT (X50-3170-00) 248
- CAR UNIT (X50-3180-00) 253
- FILTER UNIT (X51-306X-XX) 258
- AT UNIT (X53-3340-01) 261
- CONTROL UNIT (X53-3380-00) 265
- DSP UNIT (X53-3390-00) 270
- DISPLAY UNIT (X54-3080-01) 275
- SIGNAL UNIT (X57-4130-00) 281
- SWITCH UNIT (A) (X41-3240-00) 285
- SWITCH UNIT (B) (X41-3250-00) 288
- SCHEMATIC DIAGRAM 289
- VCO2 (X58-3390-03) 297
- VCO (X58-3630-XX) 297
- VOX (X59-1080-01) 298
- FM MIC (X59-3000-03) 298
- NB2 (X59-3350-00) 298
- VCO1 (X59-3440-00) 298
- LPF (X59-3450-XX) 299
- MKR (X59-3640-00) 299
- CWT (X59-3660-00) 299
- MAP (X59-3670-00) 299
- TRX (X59-3680-00) 300
- ALC (X59-3700-00) 300
- MIC AMP (X59-3710-01) 300

BLOCK DIAGRAM 301
LEVEL DIAGRAM 304
DRU-2 (DIGITAL RECORDING UNIT) 306
RM-1 (REMOTE FUNCTION KEYBOARD) 313
SP-950 (EXTERNAL SPEAKER) 315
VS-2 (VOICE SYNTHESIZER) 316
OPTION FILTER 317
SPECIFICATIONS 318

CIRCUIT DESCRIPTION

Units for Destination

1. Main units

Parts No.	Unit name	K	M	E	E2	E3	X	P	T
X41-3240-00	Switch unit A	1	1	1	1	1	1	1	1
X41-3250-00	Switch unit B	1	1	1	1	1	1	1	1
X43-3070-01	AVR unit	1	1	1	1	1	1	1	1
X44-3140-00	RF unit	1	1	1	1	1	1	1	1
X45-3450-00	Final unit	1	1	1	1	1	1	1	1
X46-3130-11	Digital unit	1						1	
X46-3130-21	Digital unit		1						
X46-3130-71	Digital unit						1		
X46-3132-71	Digital unit			1		1			1
X46-3132-72	Digital unit				1				
X48-3100-00	IF unit	1	1	1	1	1	1	1	1
X49-3050-00	AF unit	1	1	1	1	1	1	1	1
X50-3170-00	PLL unit	1	1	1	1	1	1	1	1
X50-3180-00	CAR unit	1	1	1	1	1	1	1	1
X51-3060-12	Filter unit	1	1	1		1	1	1	1
X51-3062-71	Filter unit				1				
X51-3050-00	Filter unit (YG-455C-1)	1	1	1	1	1	1	1	1
X51-3070-00	Filter unit (YG-455S-1)	1	1	1	1	1	1	1	1
X53-3340-01	AT unit	1	1	1	1	1	1	1	1
X53-3380-00	Control unit	1	1	1	1	1	1	1	1
X53-3390-00	DSP unit	1	1	1	1	1	1	1	1
X54-3080-01	Display unit	1	1	1	1	1	1	1	1
X57-4130-00	Signal unit	1	1	1	1	1	1	1	1

2. Module unit

Parts No.	Unit name	Main unit
X58-3390-03	VCO2 (Sub unit)	AF unit
X58-3630-00	VCO (Sub unit)	AF unit
X58-3630-01	VCO (Sub unit)	PLL unit
X59-1080-01	VOX	AF unit
X59-3000-03	FM MIC	AF unit
X59-3350-00	NB2	AF, IF unit
X59-3440-00	VCO1	PLL, CAR unit
X59-3450-00	LPF	AF unit
X59-3450-01	LPF	PLL, CAR unit
X59-3640-00	MKR	CAR unit
X59-3660-00	CWT	Control unit
X59-3670-00	MAP	Control unit
X59-3680-00	TRX	Control unit
X59-3700-00	ALC	Control unit
X59-3710-01	MIC AMP	Switch unit A

Accessories

Parts name	Parts No.	K	M	E	E2	E3	X	P	T
Label (rear)	B42-3510-04	1	1	1	1	1	1	1	1
Warranty card	B46-0419-00			1	1	1			
	B46-0440-00	1							
	B46-0442-00							1	
List of command key	B59-0456-00	1	1	1	1	1	1	1	1
Instruction manual	B62-0229-00	1	1	1	1	1	1	1	1
	B62-0230-00			1					
	B62-0231-00		1		1	1		1	
Instruction manual (Schematic diagram)	B62-0263-00	1	1	1	1	1	1	1	1
External control command description	B62-0233-00	1	1	1	1	1	1	1	1
7 pin DIN plug	E07-0751-05	1	1	1	1	1	1	1	1
13 pin round plug	E07-1351-05	1	1	1	1	1	1	1	1
Fuse (6A)	F05-6021-05		1						
Microphone	T91-0352-15	1	1	1	1	1	1	1	1
Remote function keyboard	X60-3240-00	1	1	1	1	1	1	1	1

CIRCUIT DESCRIPTION

Overview

The TS-950SDX is based on the TS-950SD with modified circuits and improved functions.

- **Sub IF filter added**

A selectable 10.695MHz CW filter (500Hz : YK-107C) has been added for the sub CW mode. A filter through circuit has also been added for monitoring during transmission.

- **Main and sub stereo reception**

There is an independent audio output system for the sub to let you select either mono mixed or stereo reception.

- **Mode and sub reception range expansion**

You can select USB, LSB, CW, CW-R, or FSK in the main and sub independently. Also variable SUB reception range by MAIN frequency ±1MHz.

- **DDSs as local oscillators**

DDSs are used as the main and sub first local oscillators and cover 30MHz in 1Hz steps independently.

- **Improved DSP reception performance**

The DSP-100 can provide PSN detection in SSB, CW, and FSK modes.

- **The DRU-2 can be connected. (Option)**

Frequency Configuration

The TS-950SDX uses quadruple conversion in SSB, CW, AM, and FSK modes and triple conversion in FM mode. As a transmitter, it uses double conversion in FM mode and triple conversion in SSB, CW, AM, and FSK modes.

The 100kHz IF signal is fed to the DSP in receive mode, and the microphone or key input is fed to the DSP unit in transmit mode. It becomes the 455kHz signal corresponding to each mode and is fed to the main unit. In FM mode, however, only 455kHz carriers are output from the DSP.

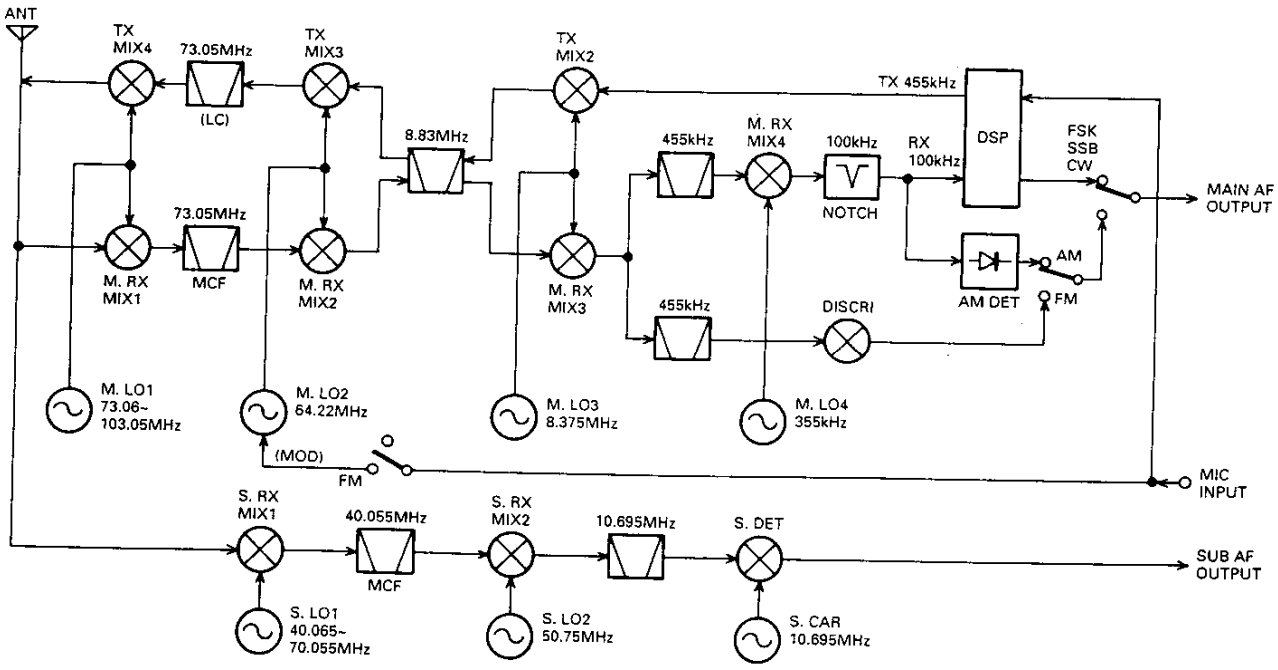

Fig. 1 Transmit and receive system frequency configuration

CIRCUIT DESCRIPTION

1. Main frequency configuration

When the receiver frequency according to f_{IN} in SSB mode gives zero beat (namely, at zero to the SSB signal with a carrier point of f_{IN}), the relationship between these signals is expressed by the following equation :

$$f_{IN} = f_{ML1} - f_{ML2} - f_{ML3} - f_{ML4} - f_{MC} \quad \ldots\ldots (1)$$

Since all these frequencies are generated by the PLL circuit as shown in the PLL system frequency configuration in Figure 2, the receiver frequency is determined only by the reference frequency, f_{STD}, and the PLL division ratio. Therefore, the reference frequency accuracy equals the operation frequency accuracy.

The accuracy of the reference oscillator used in the TS-950SDX is 0.5PPM (–10 to +50°C) since a temperature-compensated crystal oscillator (TCXO), SO-2, is used. When an external reference frequency is used, its accuracy defines the operation frequency accuracy.

The TS-950SDX local oscillator and CAR PLL are independent of each other. However, they can be operated like a cancel loop configuration by changing the CAR and local oscillator PLL data simultaneously with the microprocessor. This function allows shift (f_{MC} and f_{ML1}) according to mode change to be performed and the band width of the VBT and slope tune to be varied (f_{ML4} and f_{ML3}, f_{ML3} and f_{ML1}).

When used as a transmitter in SSB or other modes, likewise, the frequency is determined by the reference frequency, f_{STD}, and the division ratio. The display frequencies in the different modes are listed in Table 1. In FSK mode, the TS-950SDX, displays the mark transmitter frequency.

Mode	Display frequency
USB, LSB	Carrier point frequency
CW	Transmission carrier frequency
FSK	Mark transmitter frequency
AM, FM	IF filter center frequency

Table 1 Display frequency in each mode

In CW mode, the TS-950SDX receiving pitch can be changed to the required frequency while the desired signal remains in the center of the IF filter band-pass (variable CW pitch system). The receiving pitch is interlocked and varies with the transmitter side tone. This makes it possible to immediately zero-beat by receiving the desired signal at the same pitch as the side tone.

FSK transmission is executed so that the IF is shifted for both transmission and reception so that the mark/space signal passes through the center of the IF filter. Frequency f_{ML1} is shifted so that the display frequency is the mark transmitter frequency.

FM transmission is obtained in this system by modulating f_{ML2} by applying the audio signal from the microphone to VCO0.

For reception in AM and FM modes, f_{MC} is shifted (by 135kHz) by VCO9 so that no carrier enters the IF.

Shift by mode change is performed by f_{ML3}. In FSK mode, unlike AFSK mode, the signal directly modulated as the IF is output from the DSP. Since the reference frequency to the DSP is supplied from the reference frequency, f_{STD}, for the main unit.

2. Sub frequency configuration

When the receiver tone signal according to frequency f_{IN} from the antenna gives zero beat, the relationship between the receive signals in SSB mode is expressed by the following equation:

$$f_{IN} = f_{SL1} - f_{SL2} + f_{SC} \quad \ldots\ldots\ldots\ldots (2)$$

Frequency f_{SL2} is produced by a crystal oscillator circuit, but since the signal is input to the PLL circuit that generates f_{SL1} as a cancel loop, the receiver frequency, like the main frequency, is determined only by the reference frequency, f_{STD}, and the PLL division ratio. When used as a transmitter in SSB or other modes (sub reception is off in AM and FM modes), likewise, the frequency is determined by the reference frequency, f_{STD}, and the PLL division ratio. The display frequencies in the different modes are the same as those for the main frequency.

Since sub reception works as a transmission monitor, the IF is shifted to the main display frequency in transmit mode, unlike the display frequency. In AM and FM modes, the frequency always equals the main frequency.

PLL Circuit

The TS-950SDX PLL circuit consists of a PLL loop (MLO1, SLO1) that includes DDS and covers the frequency range 10kHz to 30MHz in 10Hz or 1Hz steps in accordance with the reference frequency of 20kHz, and a PLL loop that generates other local oscillation (MLO2 to MLO4) and CAR (MCAR, SCAR). Figure 2 shows the PLL system frequency configuration.

The division ratio data to each PLL loop is controlled by microprocessor. Each loop is of a single-crystal-frequency control system : the phase is compared with the unique reference frequency, f_{STD}.

CIRCUIT DESCRIPTION

1. Reference signal generation circuit (CAR unit)

The reference frequency, fSTD, used for frequency control is determined by the temperature-compensated crystal oscillator (L77-1394-15) (TCXO, SO-2 standard). One reference frequency is output as the reference signal for the PLL unit. The other is divided by two by IC14 : M74LS90P to produce a 10MHz signal. This signal is used as the PLL reference signal, fREF, for the CAR unit, and is output to the AF unit and DSP unit as the PLL reference signal, fREF.

The reference signal generation circuit has a VCXO based on the external 10kHz signal to use the external reference input. The 10kHz (1Vp-p) input from EXT STD passes through amplifier Q12 : 2SC2712 and goes to pin 14 of IC13 as the PLL reference signal. The output (20.0MHz) from the VCXO comprising D9, X1, and Q13 is divided by 5 by IC14 and by 2 by IC15 to produce a 1MHz signal. This signal is divided by 100 by IC13 : MC14568BCP to produce a 10kHz comparison frequency. The internal and external reference frequencies can be switched by S1 and S2.

The 20MHz signal input to the PLL unit is divided by two by IC9 : SN74LS7490N to produce a 10MHz signal. The signal is also divided by 5 to produce a 4MHz signal.

2. DDS clock generation circuit (PLL unit)

Since fs (10.48576MHz) is used for the DDS clock signal, the 2fs signal (20.97152MHz) is generated and input to the DDS IC.

VCO8 (VCO1 module) generates 97.152MHz, and the signal is input to pin 11 of PLL IC IC5 : CXD1225M and locked. The signal goes to pin 4 of IC6 and is divided by 100 to produce a 971.52kHz signal. It is then applied to pin 2 of IC7 and mixed with a 20MHz signal, and is passed through a band-pass filter to produce a 20.97152MHz signal. The signal is amplified by the Q9 amplifier and goes to pin 40 of IC3 and IC4.

3. Main LO1 (PLL unit/AF unit)

DDS IC IC3 : F71022, downstream of LO1, generates 950 to 450kHz in 10 or 1Hz steps. The signal goes to IC9, is mixed with a 4MHz signal, and passed through a band-pass filter to produce a 4.95 to 4.45MHz signal. The signal is further mixed with a 40MHz signal to produce a 35.05 to 35.55MHz signal, and is passed through buffer Q5 : 2SC2714 and output to the AF unit.

In PLL1, upstream of LO1, the VCO1 module generates 73.06 to 103.05MHz. It consists of four VCOs and uses Q1 to Q4 : 2SK210 x 4. The 10MHz frequency, fREF, is applied to pin 5 of IC11 : CXD1225M, and is divided by 20 internally to produce a 500kHz comparison frequency. The VCO1 output is amplified by amplifier Q33 : 2SC2714, and is passed through a band-pass filter. One output is passed through buffer Q37 : 2SC2996 and goes to the RF unit. The other output is applied to pin 5 of mixer IC12 : SN76514N. The signal is mixed with the signal generated by the PLL unit, and the mixed signal is passed through a band-pass filter to produce a 38 to 68MHz signal. It is passed through the buffer amplifier of Q34 and Q35 : 2SC2714 x 2 and applied to pin 11 of IC11.

This signal is divided by N1 internally, and compared with the 500kHz signal by the phase comparator. The output frequency is locked in 500kHz steps. The division ratio, N1, is transmitted from the digital unit as data (76 to 136) corresponding to 10kHz to 30MHz. One of the four VCO1s is selected according to the VCO change data from the digital unit.

The final output frequency of the main LO1 is 73.06 to 103.05MHz in 10Hz (or 1Hz) steps depending on the data for division ratios N1 and DDS1, and is output to the RF unit.

4. Main LO2 (AF unit)

In PLL0, Q1 : 2SK508NV of VCO0 generates 64.22MHz. The 10MHz frequency, fREF, is applied to pin 5 of IC13 : CXD1225M, and is divided by 500 (2000 in FM mode) internally to produce a 20kHz (5kHz in FM mode) comparison frequency. The VCO0 output is applied to pin 11 of IC13, and is divided by 3211 (12844 in FM mode) internally. It is compared with the 20kHz (5kHz in FM mode) signal by the phase comparator. The VCO0 frequency is locked. The division ratio is transmitted from the digital unit.

The output from PLL0 is passed through buffer Q39 : 2SC2714 and the low-pass filter, and is output to the IF unit as the main LO2.

5. Main LO3 (CAR unit)

In PLL6, the VCO6 module generates about 162.5MHz. The 10MHz frequency, fREF, is applied to pin 5 of IC3 : CX7925B, and is divided by 5000 internally to produce a 2kHz comparison frequency. The VCO6 output is applied to pin 11 of IC3, and is divided by N6 internally, and compared with the 2kHz signal by the phase comparator. The VCO6 frequency is locked. The division ratio, N6, is transmitted from the digital unit. The bandwidth is changed and the carrier point is finely adjusted by changing the data for the division ratio ($\Delta N6=\Delta 2N3$) of PLL6 and DDS1 by microprocessor at the same time.

The output from PLL6 is divided by 100 internally by IC4 : M54459L and applied to pin 2 of mixer IC5 : SN16913P. The mixer mixes it with the 10MHz signal. The resulting signal is passed through ceramic filter CF1 to generate a signal of 8.375MHz, and is further passed through amplifier Q3 : 2SC2714, and output to the IF unit as the main LO3.

CIRCUIT DESCRIPTION

6. Main LO4 (CAR unit)

In PLL5, the VCO5 module generates about 35.5MHz. The 10MHz frequency, fREF, is applied to pin 5 of IC1 : CX7925B, and is divided by 5000 internally to produce a 2kHz comparison frequency. The VCO5 output is applied to pin 11 of IC1, and is divided by N5 internally and compared with the 2kHz signal by the phase comparator. The VCO6 frequency is locked. The division ratio, N5, is transmitted from the digital unit.

The bandwidth is changed and the carrier point is finely adjusted by changing the data for the division ratio (ΔN5=Δ2N3) of PLL5 and DDS1 by microprocessor at the same time. The division ratio is shifted in CW mode as well.

The output from PLL5 is divided by 100 by IC2 : M54459L to generate a 355kHz signal. It is passed through buffer Q1 : 2SC2712, and output to the signal unit as the main LO4.

7. Sub LO1 (PLL unit)

DDS IC IC4 : F71022, downstream of SLO1, contains a chopper circuit comprising Q12 and Q13 : 2SK508NV. The 9.695 to 9.195MHz signal is output in 10 or 1Hz steps from Q14 : 2SC2712(Y). This signal is passed through a band-pass filter and goes to pin 2 of mixer IC8 : SN16913P.

The signal is mixed with a 4MHz signal by the mixer, and the resulting signal is passed through a band-pass filter to generate a signal of 13.695 to 13.195MHz. This signal is applied to pin 2 of mixer IC13 : SN16913P. The mixer mixes the signal with the 50.75MHz signal of the sub LO2. The resulting signal is passed through a band-pass filter to generate a signal of 37.055 to 37.555MHz. This signal is applied to pin 2 of mixer IC12 : SN16913P.

In PLL7, upstream of LO1, the VCO7 module generates 40.065 to 70.055MHz. It consists of four VCOs, and uses Q1 to Q4 : 2SK210 x 4. The 10MHz frequency, fREF, is applied to pin 5 of IC11 : CXD1225M, and is divided by 20 internally to produce a 500kHz comparison frequency. The VCO7 output is amplified by Q26 : 2SC2714, and is passed through a band-pass filter. One output is passed through buffer Q29 : 2SC2714 and goes to the RF unit. The other output is passed through buffer Q27 : 2SC2714 and applied to pin 5 of mixer IC12.

The signal is mixed with the signal generated by DDS2 and LO2 OSC2, and is passed through a low-pass filter to produce a signal of 3.0 to 33.0MHz. It is passed through buffer Q25 and Q24 : 2SC2712 x 2 and applied to pin 13 of IC11. This signal is divided by N7 internally, and compared with the 500kHz signal by the phase comparator. The output frequency is locked in 500kHz steps.

The division ratio, N7, is transmitted from the digital unit as data (6 to 66) corresponding to 10kHz to 30MHz in 500kHz steps. The A.LPF uses Q18 to Q20 and Q21 to Q23 : 2SC2714(Y) x 6 and switches the loop constants by VCO7 A to D.

The final output frequency of the sub LO1 is 40.065 to 70.055MHz in 10Hz steps, depending on the division ratios, N7 and N8, and is output to the RF unit.

8. Sub LO2 (PLL unit)

Local oscillator signal LO2 is generated by the 50.75MHz crystal oscillator, X1 and O30 : 2SC2714. One local oscillator signal is output to the PLL cancel loop of the sub LO1 and is applied to pin 5 of mixer IC13. The other local oscillator signal is passed through buffer Q32 : 2SC2714 and the low-pass filter, and is directed to the IF unit as the sub LO2. The local oscillator signals generated by the crystal oscillator circuit are input to the PLL loop to cancel drift.

9. Sub CAR (CAR unit)

In PLL4, the VCO4 module generates about 69.5MHz. The 10MHz frequency, fREF, is applied to pin 5 of IC6 : CX7925B, and is divided by 5000 internally to produce a 2kHz comparison frequency. The VCO4 output is applied to pin 11 of IC6, and is divided by N4 internally and compared with the 2kHz signal by the phase comparator. The VCO4 frequency is locked. The division ratio, N4, is transmitted from the digital unit.

The output from PLL4 is divided by 100 by IC7 : M54459L and applied to pin 2 of mixer IC8 : SN16913P. In IC8, it is mixed with the 10MHz signal. The resulting signal is passed through ceramic filter CF2 to generate a 10.695MHz signal, and is further passed through amplifier Q5 : 2SC2714 and output to the signal unit as the sub CAR.

CIRCUIT DESCRIPTION

10. Main CAR

In PLL9, the VCO9 module generates about 10MHz. The 10MHz frequency, fREF, is applied to pin 5 of IC9 : CX7925B, and is divided by 5000 internally to produce a 2kHz comparison frequency. The VCO9 output is applied to pin 11 of IC9, and is divided by N9 internally and compared with the 2kHz signal by the phase comparator. The VCO9 frequency is locked. The division ratio, N9, is transmitted from the digital unit. The division ratios are changed in CW, AM, and FM modes so that the VCO9 frequency is shifted.

One output from PLL9 is applied to pin 2 of mixer IC11 : SN16913P. IC11 mixes it with the 10MHz signal. The signal is passed to a low-pass filter and converted to the 80kHz (±50kHz) AFT signal used by AF VBT in CW mode. It is then passed through buffer Q10 : 2SC2712 and output to the AF unit.

11. Marker signal

The 1MHz signal generated by the reference signal generation circuit of the CAR unit is applied to the MKR module, divided by two internally, and the 500kHz harmonic signal is output to the RF unit when the calibration (CAL) switch is on.

Item	Rating
Center frequency (fo) (The center frequency must be the center of the 3dB band)	8.40MHz ± 30kHz
3dB attenuation bandwidth	Within 180 ± 40kHz
20dB attenuation bandwidth	400kHz or less
Insertion ross	9.0dB or less Formula = 20 · log (E1/2 · E2)
Ripple	1.0dB or less (within 3dB band)
Spurious attenuation	25dB or more (6 to 10MHz)
Voltage capacity	50V DC (1 minute)
Input and output impedance	330Ω

Table 2 Ceramic filter (L72-0343-05) : CAR unit CF1

Item	Rating
Center frequency (fo) (The center frequency must be the center of the 3dB band)	Within 10.700MHz ± 50kHz
3dB attenuation bandwidth	Within 150 ± 40kHz
20dB attenuation bandwidth	380kHz or less
Insertion ross	8.0dB or less Formula = 20 · log (E1/2 · E2)
Ripple	1.0dB or less (within 3dB band)
Spurious attenuation	38dB or more (9 to 12MHz)
Voltage capacity	50V DC (1 minute)
Input and output impedance	330Ω

Table 3 Ceramic filter (L72-0369-05) : CAR unit CF2

12. DDS

The DDS IC has been developed with standard cells to implement a high-speed circuit and large-capacity ROM at low cost.

- **IC configuration**

· Two 28-bit registers for setting frequency data, one 28-bit frequency shift register for addition to the frequency register, and a data entry and selection section.
· SIN-ROM that converts phase data to sine data.

- **Frequency/shift data setting**

Using serial signals synchronized with the clock pulses, a total of 30 bits (2 bits that specify the destination in which data is set and 28 bits for frequency data) are set in three internal registers.

- **Frequency register selection**

The data set in the two frequency registers is selected by the SLAB input of the DDS IC. This pin handles the ABSL signal for IC1 and IC3, and the CASL signal for IC2 and IC4. This function eliminates the need for the TS-950SDX microprocessor to set frequency data for each transmission and reception.

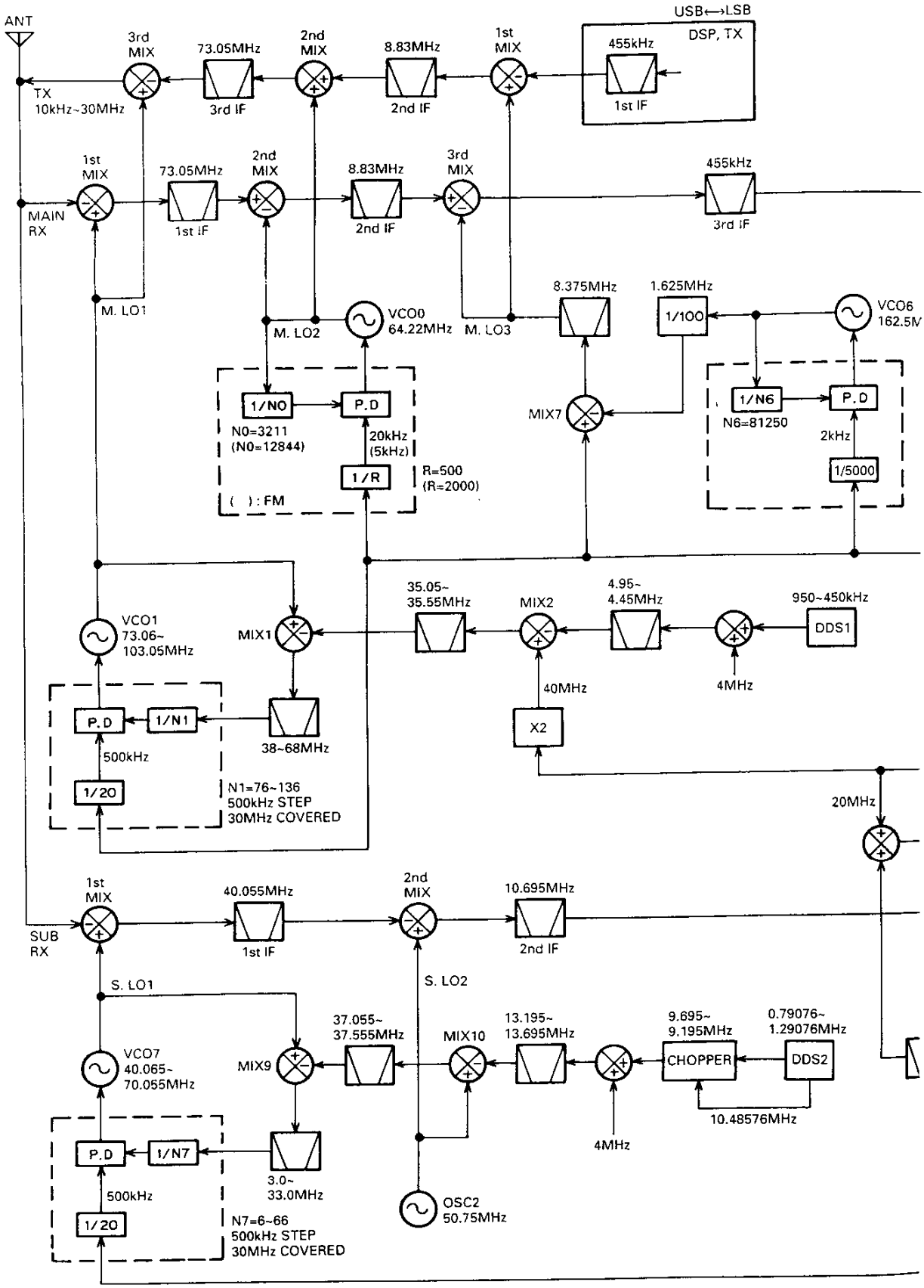

Fig. 2 PLL syst

CIRCUIT DESCRIPTION

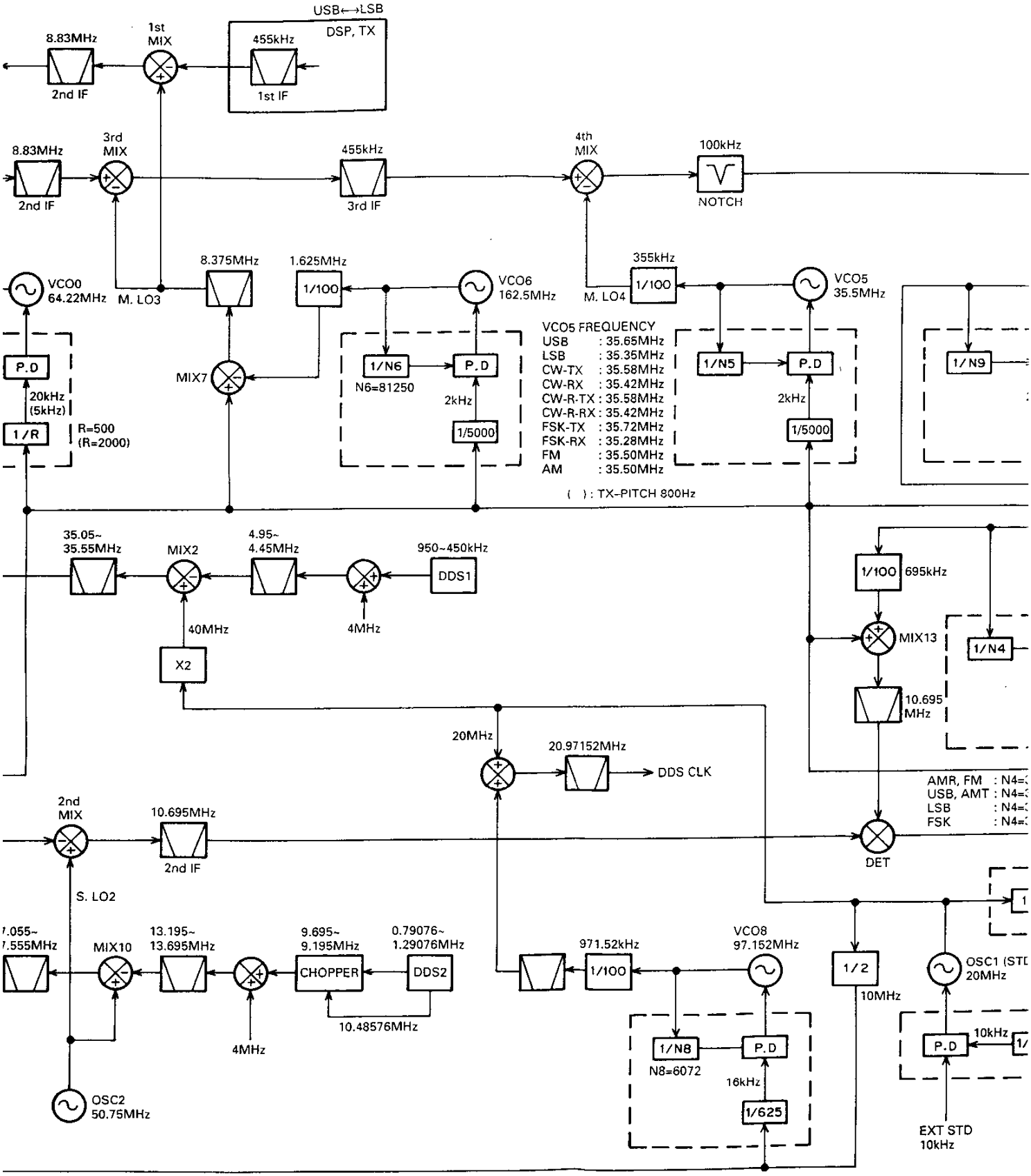

Fig. 2 PLL system frequency configuration

IT DESCRIPTION

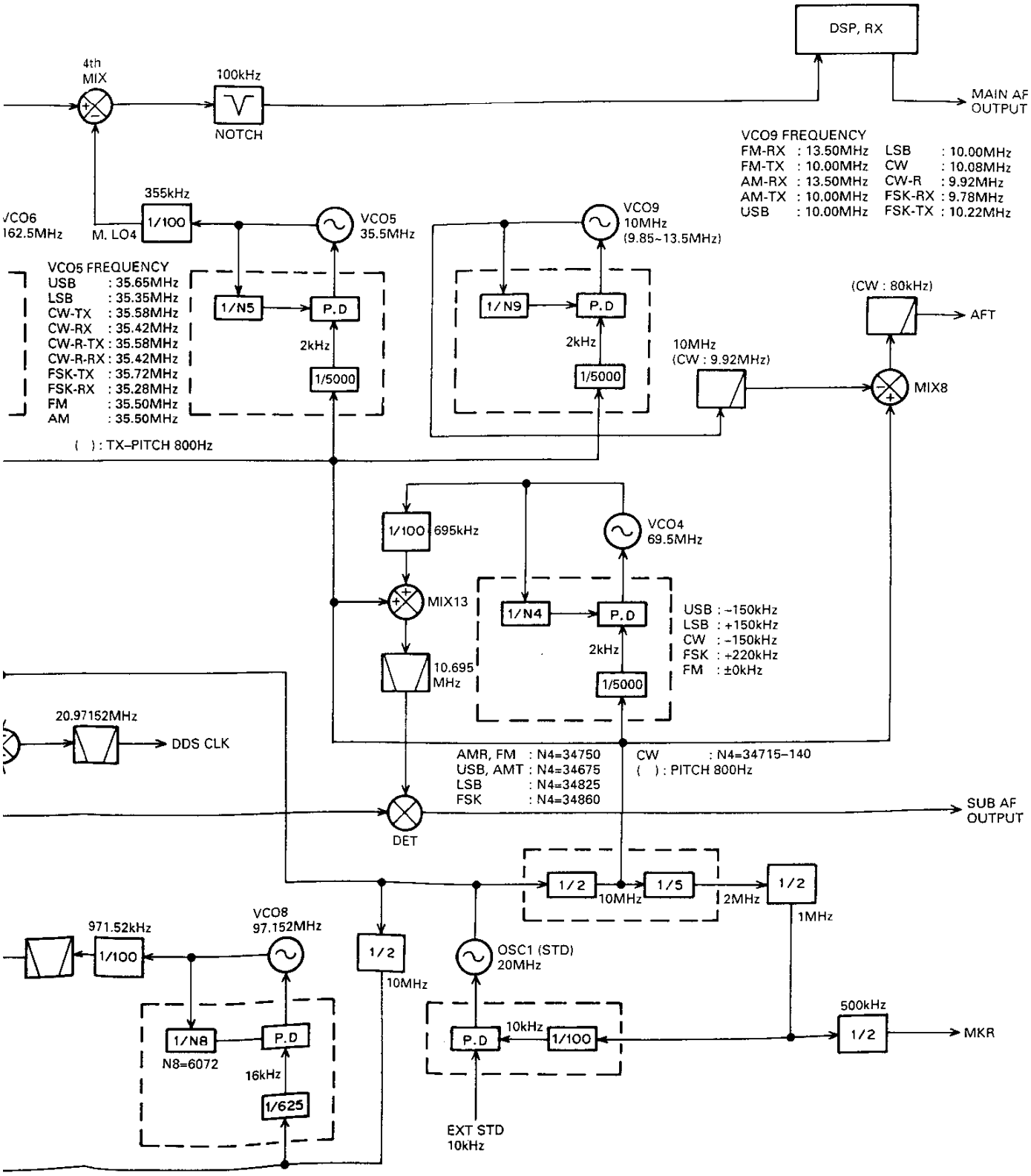

system frequency configuration

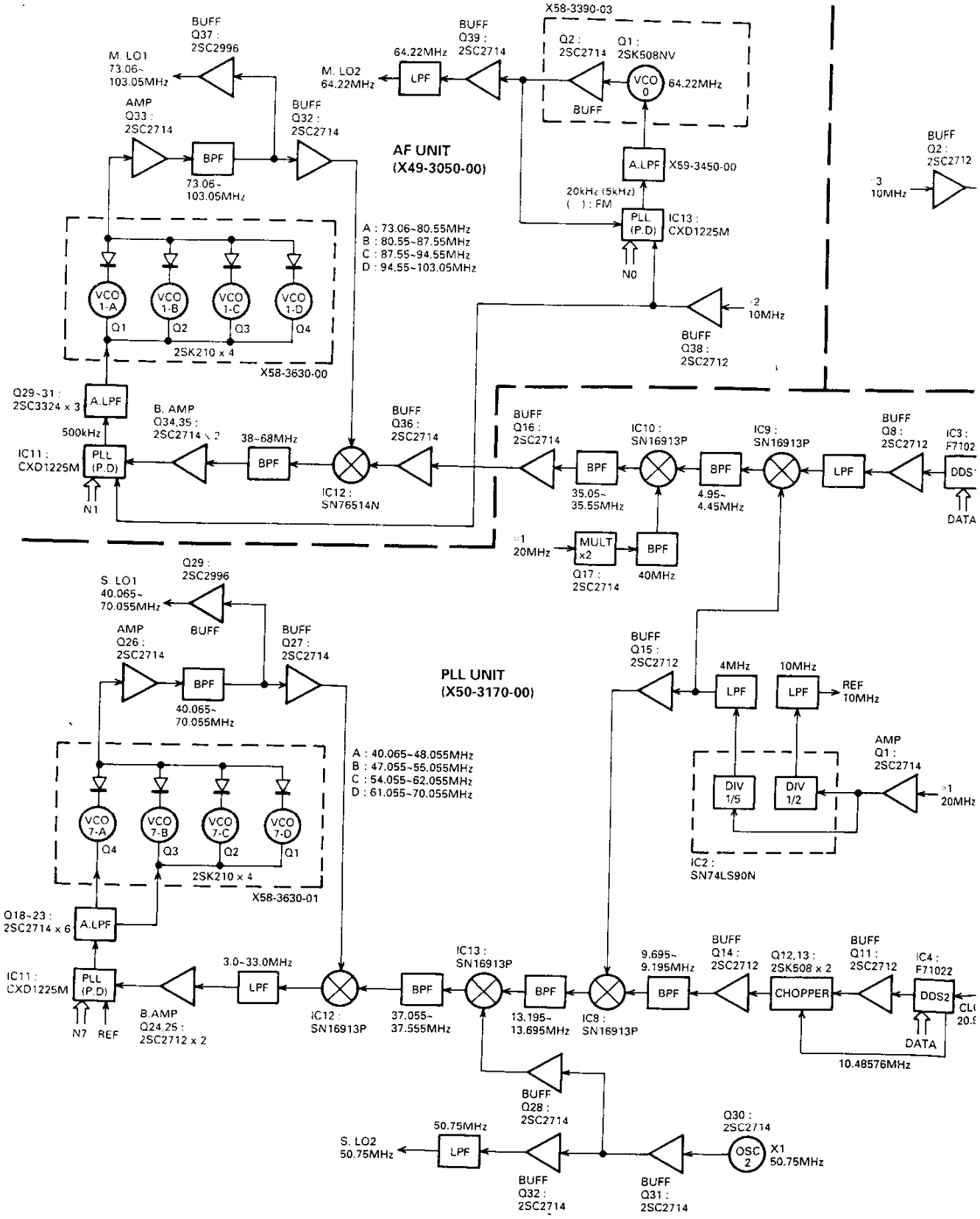

Fig. 3 PLL block

TS-950SDX TS-950SDX

CIRCUIT DESCRIPTION

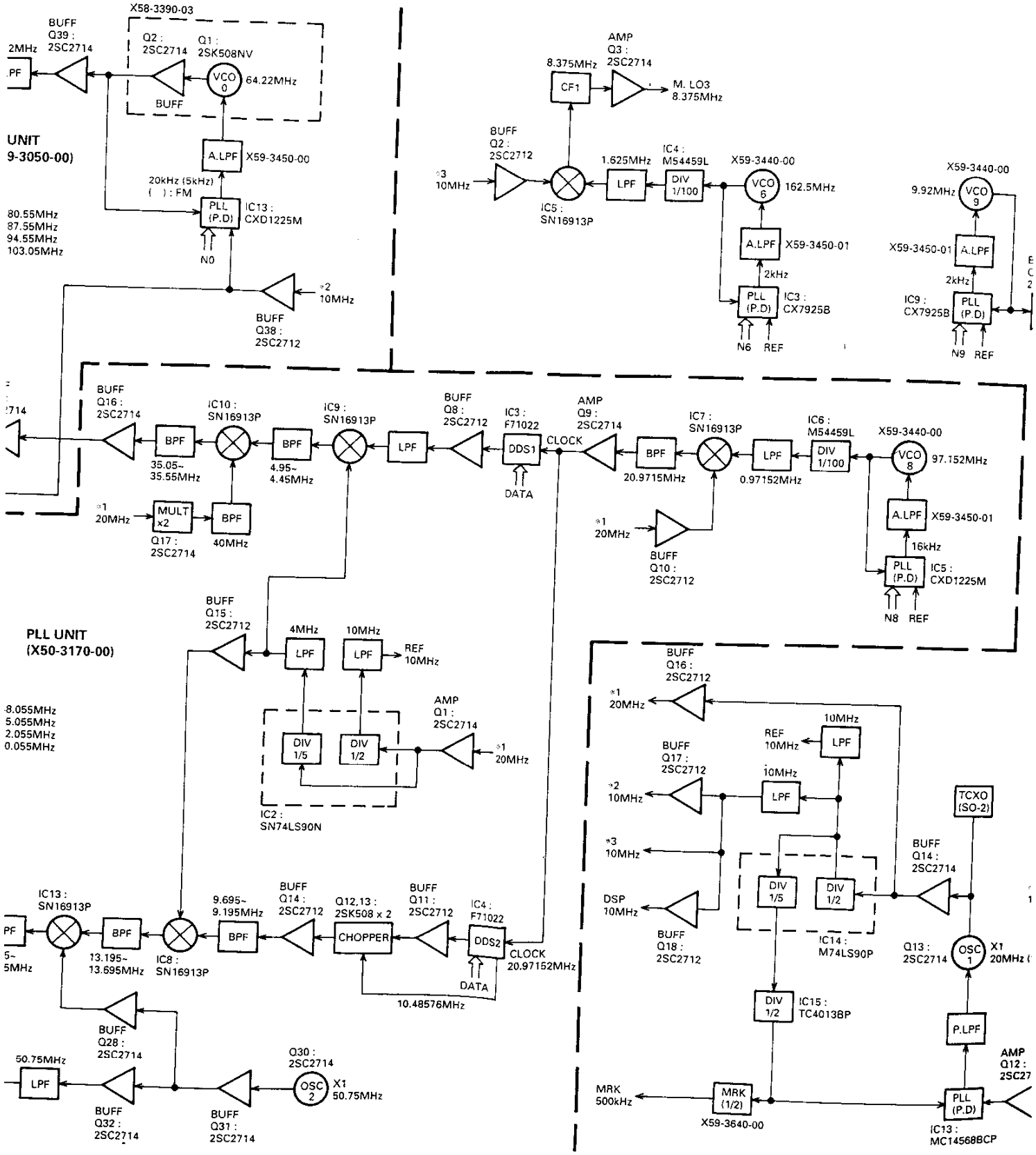

Fig. 3 PLL block diagram

TS-950SDX

RIPTION

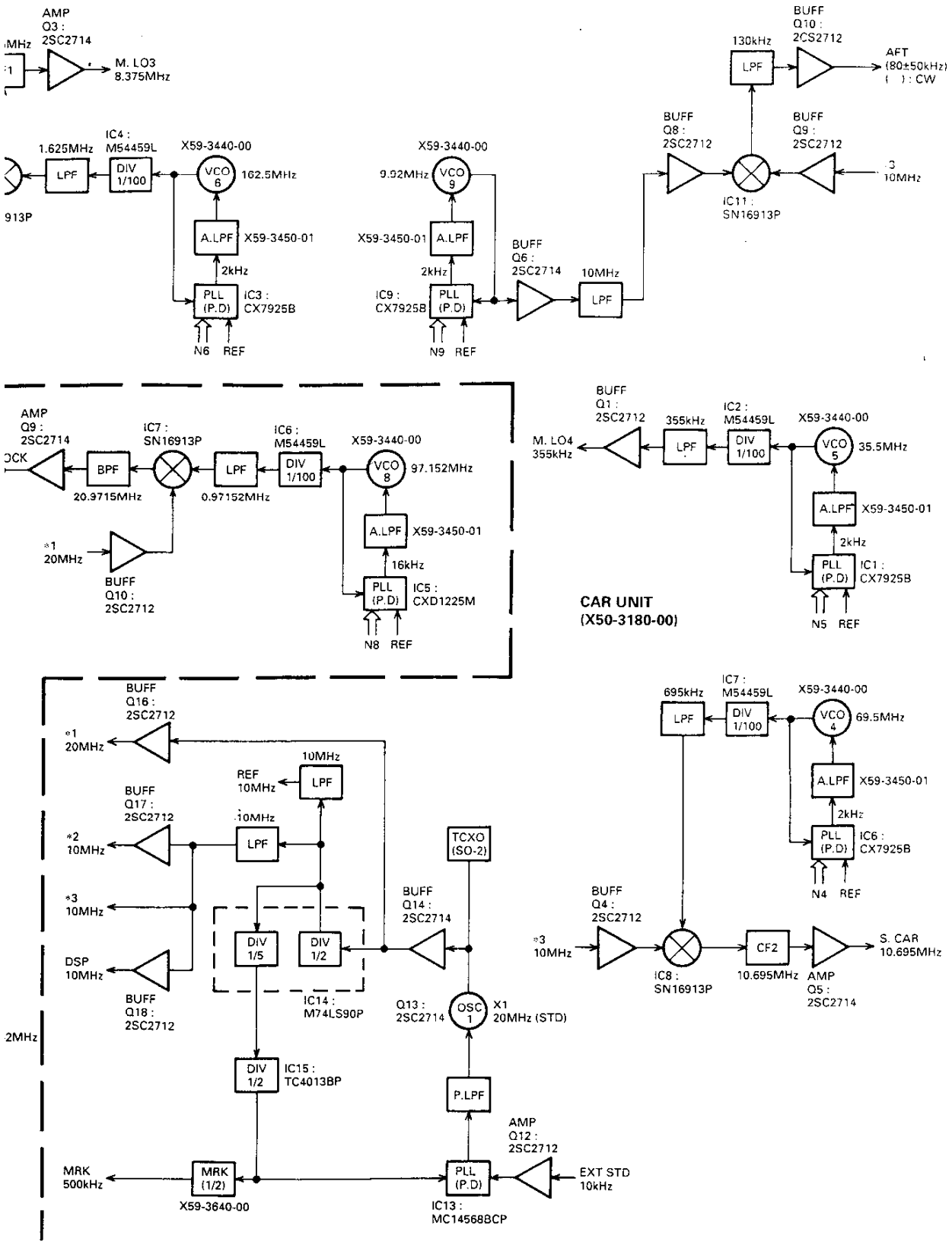

iagram

CIRCUIT DESCRIPTION

- **Frequency data selection**

The SPSL input of the DDS IC selects whether to use the data in the internal frequency shift register or the parallel input data as frequency modulation data.

- **Frequency modulation**

The MDEN input of the DDS IC enables or disables frequency modulation. When frequency modulation is enabled, frequency data is added, and the result is input to the phase data operation section.

- **Phase data operation**

The target frequency phase data is output by accumulating 28-bit frequency data in the 28-bit phase accumulator.

$Fout = Fs/2^{28} \cdot Dsum$

Fs : DDS IC input frequency/2 (10.48576MHz for TS-950SDX)

Dsum : Frequency data + Frequency modulation data

If 2^{25} is set for Dsum when 1/8 Fs is output, the phase data must be increased by $\pi/8$.

A 28-bit absolute value operation has been used so far, but a 28-bit signed operation can also be used, assuming the MSB is the sign. If complement data of 8000000 to FFFFFFFF (hex) is set, the phase moves in the negative direction for positive data.

- **SIN ROM**

Phase data from the phase data operation section is converted to sine data of 0000 to FFFF (hex) in 16-bit offset binary format.

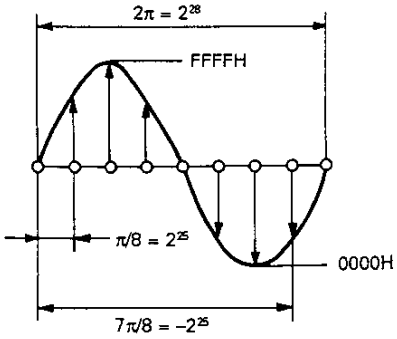

13. Chopper

When the output from the DDS IC is converted to an analog signal by the D/A converter using a ladder resistor network, the possible output frequency range is 0 to Fs/5. To obtain an output of 9.695MHz, 0.79076 MHz is produced and then converted to 9.695MHz by a mixer.

When you look at the DDS output spectrum when Fs is 10.48576MHz, the basic frequency is 0.79076 MHz and the harmonic component is 9.695MHz. The level of this component is lower than the basic level because of the aperture effect, and the C/N ratio is not enough. The D/A output is extracted as thin rectangular pulses by the chopper to increase the level to the basic wave level and obtain an output with a sufficient C/N ratio. Use of the chopper eliminates the need for a filter in the mixer input.

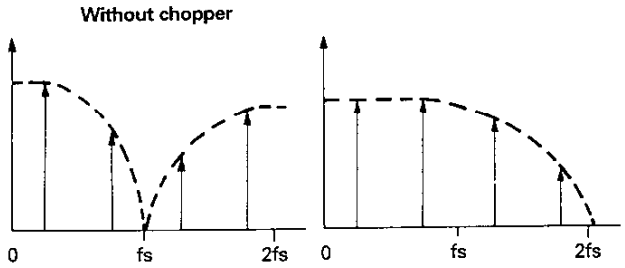

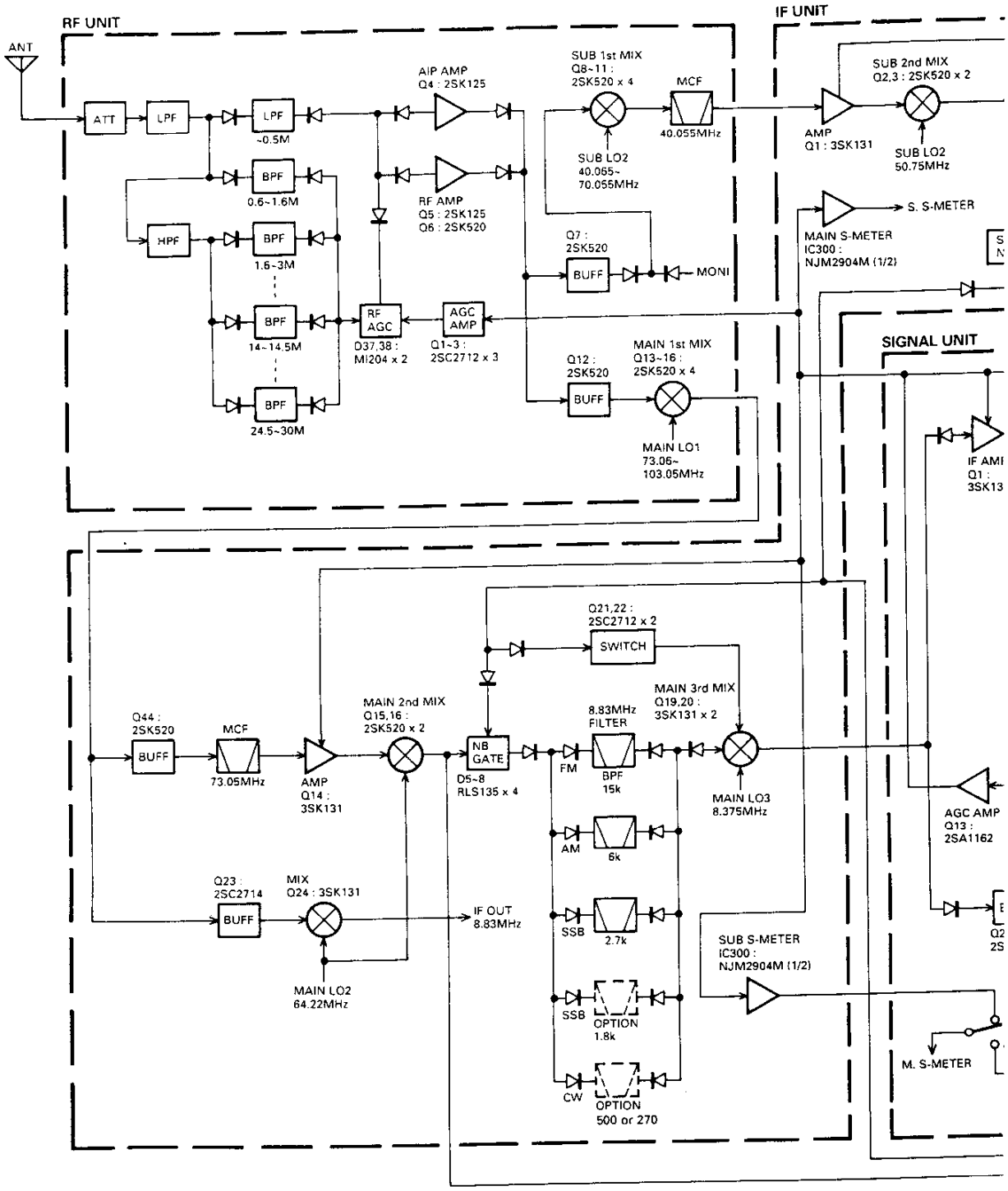
RF UNIT
IF UNIT
SIGNAL UNIT
ANT
ATT
LPF
LPF
~0.5M
BPF
0.6~1.6M
HPF
BPF
1.6~3M
BPF
14~14.5M
BPF
24.5~30M
AIP AMP
Q4 : 2SK125
RF AMP
Q5 : 2SK125
Q6 : 2SK520
RF AGC
D37,38 :
MI204 x 2
AGC AMP
Q1~3 :
2SC2712 x 3
SUB 1st MIX
Q8~11 :
2SK520 x 4
MCF
40.055MHz
SUB LO2
40.065~
70.055MHz
Q7 :
2SK520
BUFF
MONI
Q12 :
2SK520
BUFF
MAIN 1st MIX
Q13~16 :
2SK520 x 4
MAIN LO1
73.06~
103.05MHz
SUB 2nd MIX
Q2,3 : 2SK520 x 2
AMP
Q1 : 3SK131
SUB LO2
50.75MHz
S. S-METER
MAIN S-METER
IC300 :
NJM2904M (1/2)
IF AMP
Q1 :
3SK13
Q21,22 :
2SC2712 x 2
SWITCH
Q44 :
2SK520
BUFF
MCF
73.05MHz
AMP
Q14 :
3SK131
MAIN 2nd MIX
Q15,16 :
2SK520 x 2
NB
GATE
D5~8
RLS135 x 4
FM
8.83MHz
FILTER
BPF
15k
MAIN 3rd MIX
Q19,20 :
3SK131 x 2
MAIN LO3
8.375MHz
AM
6k
SSB
2.7k
SSB
OPTION
1.8k
CW
OPTION
500 or 270
AGC AMP
Q13 :
2SA1162
Q23 :
2SC2714
BUFF
MIX
Q24 : 3SK131
IF OUT
8.83MHz
MAIN LO2
64.22MHz
SUB S-METER
IC300 :
NJM2904M (1/2)
M. S-METER

Fig. 4

CIRCUIT DESCRIPTION

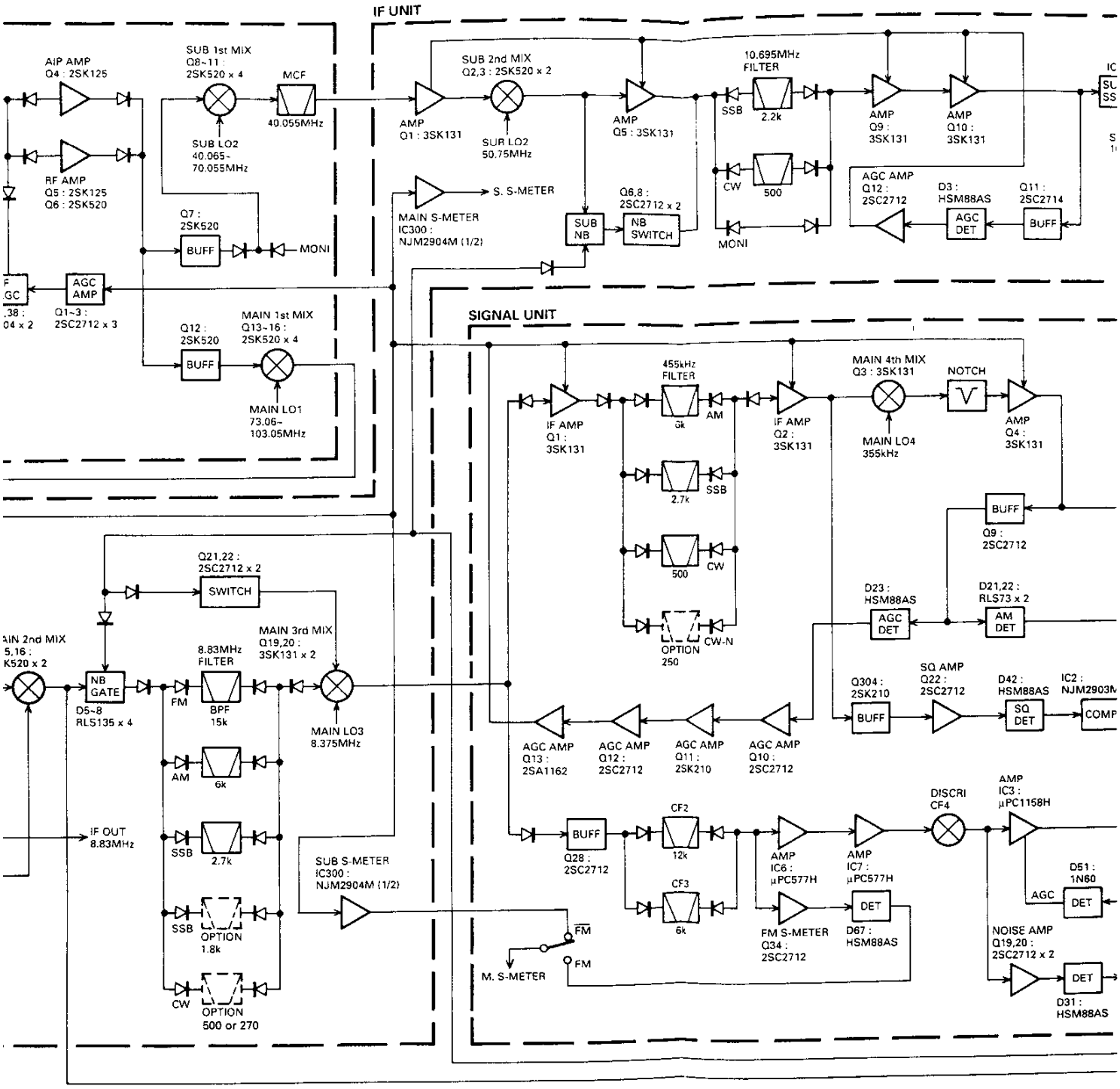

Fig. 4 Receiver circuit block diagram

X TS-950SDX

IT DESCRIPTION

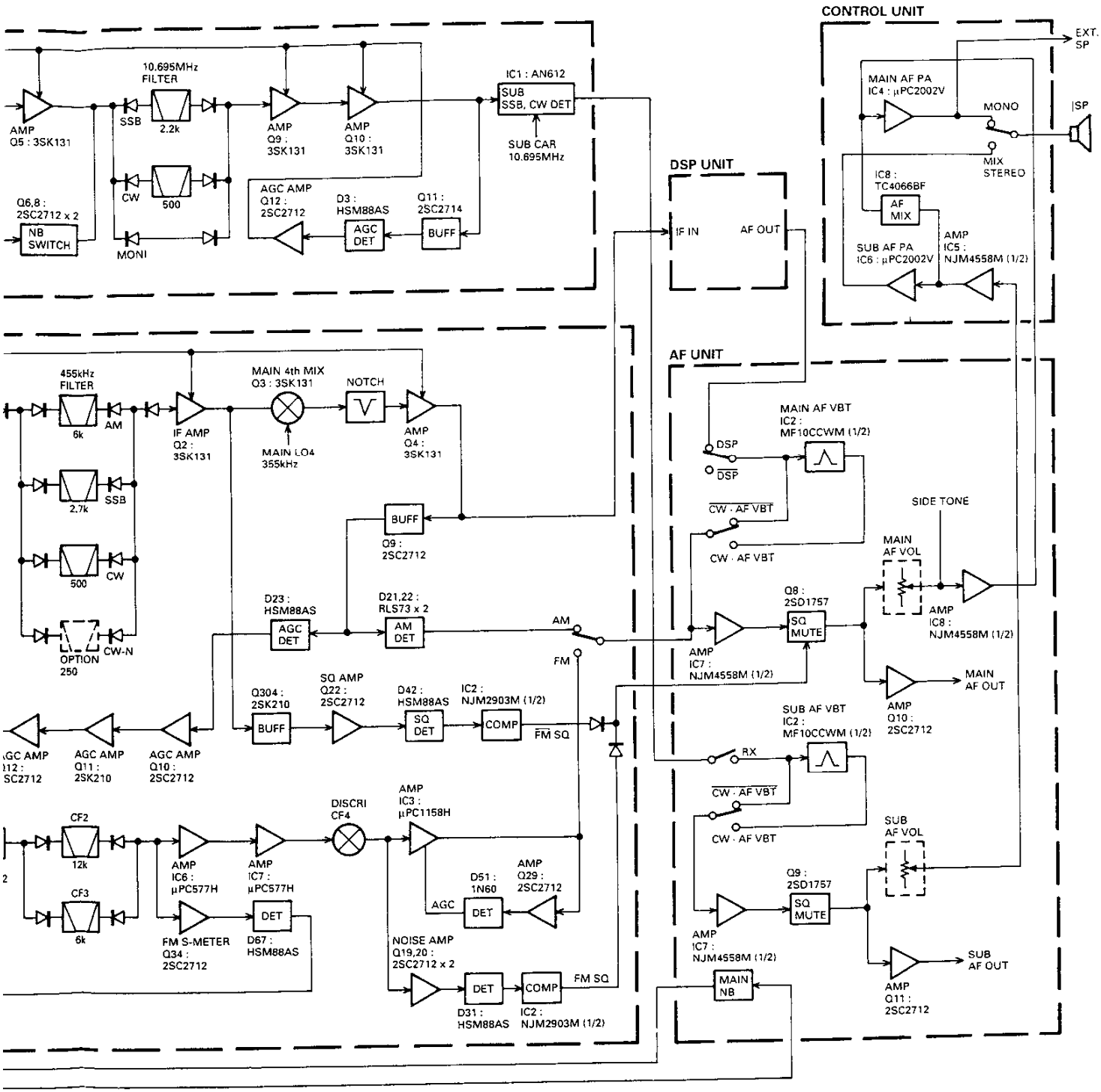

ceiver circuit block diagram

CIRCUIT DESCRIPTION

Receiver Circuit Configuration

Figure 4 is a receiver block diagram.

The signal from the antenna is passed through the transmitter/receiver selector circuit of the filter unit (X51-306X-XX). It is fed to the RX ANT OUT (RCA jack) on the rear panel, and is applied to the RF unit (X44-3140-00) from RX ANT IN (RCA jack) through the rear cable. This signal is passed through the RF attenuator (0 to 18dB selectable) via relays K1 and K2 and the low-pass filter (30MHz). The impedance is raised to 200Ω by L3, and the signal enters the receiver BPF. The BPF divides the received frequency range (up to 30MHz) into 15 bands, which are automatically selected by the RX BPF control data (RB0 to RB3) from the digital unit (X46-313X-XX).

RX frequency (MHz)	RX BPF data			
	RB3	RB2	RB1	RB0
0.00~ 0.49	1	0	0	1
0.49~ 1.62	0	1	0	0
1.62~ 2.99	0	0	1	1
2.99~ 3.99	0	1	1	0
3.99~ 6.99	0	1	1	1
6.99~ 7.49	1	0	0	0
7.49~ 9.99	0	1	0	1
9.99~10.49	1	1	1	0
10.49~13.99	1	0	1	0
13.99~14.99	0	0	0	0
14.99~17.99	1	0	1	1
17.99~20.99	1	1	0	0
20.99~21.49	0	0	0	1
21.49~24.49	1	1	0	1
24.49~30.00	0	0	1	0

Table 4 RX BPF select data

The signal from the BPF passes through the RF AGC circuit composed of pin diodes D37 and D38 : MI204. It is then amplified by the RF amplifier comprising Q5 : 2SK125-5 and Q6 : 2SK520. (When AIP is on, the signal is directed to RF buffer Q4 : 2SK125 with gain 1, not to the RF amplifier.) The amplified signal is separated into the main and sub channels by L70. The signals are passed through different circuits.

The main received signal is passed through buffer Q12 : 2SK520 and the low-pass filter, and is mixed with the VCO signal in the first mixer, Q13 to Q16 : 2SK520. The output is converted to the first IF signal of 73.05MHz. The signal applied to the IF unit (X48-3100-00) from the MIF terminal (CN6) is separated into two channels; one is passed through buffer Q23 : 2SC2714, and is mixed with the HET signal in mixer Q24 : 3SK131 to make a 8.83MHz wide-band signal. This signal is output from the rear as IF OUT1, and is used as a signal for the band scope for station monitor SM-230.

The other is passed through buffer Q44 : 2SK520. The unwanted signal components are eliminated from the signal when it passes through MCF XF2 with 15kHz bandwidth. The signal is amplified by first IF amplifier Q14 : 3SK131, then applied to the second mixer, Q15 and Q16 : 2SK520, mixed with the HET signal (64.22MHz), and converted to the second IF signal (8.83MHz). This signal is separated into two channels; one is supplied to the noise blanker in the AF unit (X49-3050-00), and the other is applied to the second IF signal filter circuit via the noise blanking gate comprising diodes D5 to D8 : RLS135.

This filter circuit has wide-band LC filters L28 and L29, 6kHz MCF (XF4), 2.7kHz MCF (XF3), and 500Hz crystal filter. As an option, the filter circuit permits the use of two types of filter (270Hz) instead of 1.8kHz and 500Hz. These filters can be selected by IC8 : TC9174F of the signal unit (X57-4130-00) to convert serial data from the digital unit (X46-313X-XX) to parallel data.

The received signal, having passed through the second IF filter, is applied to the third mixer Q19 and Q20 : 3SK131, to be mixed with the HET signal (8.375MHz). The signal is then converted to the third IF signal (455kHz). It goes to the signal unit via the TR455 terminal (CN17).

This 455kHz signal is then separated into two channels; FM and non-FM. In FM, the signal is amplified by Q1 : 3SK131 and applied to the third IF filter circuit. This filter circuit has a 6kHz ceramic filter (CF1) and 2.7kHz ceramic filter (CF101). As an option, the filter circuit permits the use of two crystal filters (2.4kHz) instead of 250Hz and 2.7kHz. These filters, like the the second IF filter circuits, can be selected by the output of IC8.

CIRCUIT DESCRIPTION

	Display	Filter type		Filter selection range			
		Standard	Option	SSB	CW, FSK	AM	FM
8.83MHz	–	LC filter		↑		↑	○
	6kHz	MCF : L71-0266-05				○	
	2.7kHz	MCF : L71-0222-05		○	○	↓	
	1.8kHz		Crystal : YK-88SN-1	↓			
	500Hz	Crystal : YK-88C-1					
	270Hz		Crystal : YK-88CN-1		↓		
455kHz	12kHz	CF : L72-0315-05					↑
	6kHz	CF : L72-0319-05		↑		○	○
	2.7kHz	Crystal : YG-455S-1		○	○	↓	
	500Hz	Crystal : YG-455C-1					
	250Hz		Crystal : YG-455CN-1		↓		
10.695MHz	2.7kHz	MCF : L71-0249-05					
	500Hz	Crystal : YK-107C					

Either 500Hz or 270Hz can be installed for 8.83MHz.
The bandwidth for the YG-455S-1 is 2.4kHz.
In filter selection, ○ indicates the initial setting and → indicates a selectable range.

Table 5 Filters and mode-specific selection ranges

The 455kHz signal from the third IF filter is amplified by Q2 : 3SK131, and is mixed with the CAR signal (355kHz) in fourth receive mixer Q3 : 3SK131. The signal is converted to the fourth IF signal of 100kHz, passed through the notch filter circuit, and input to Q4 : 3SK131. The amplified output is output from the IFO2 terminal (CN15), and the signal is processed by the DSP unit (X53-3390-00) to produce an AF signal.

The output of Q2 is passed through Q304 : 2SK210, applied to Q22 : 2SC2712, and made into the squelch signal for signals other than FM by comparator IC2 (a/2) : NJM2903M. The output of Q4 is passed through Q9 : 2SC2712 and is applied to Q10 : 2SC2712 to produce an AGC signal.

In FM mode, the 455kHz signal is passed through IF buffer Q28 : 2SC2712, and applied to the third IF filter circuit. The filter is selected between wide-band CF2 for the 12kHz band and narrow-band CF3 for the 6kHz band. The output is amplified by limiter amplifier IC6 and IC : μPC577H, then demodulated by ceramic discriminator CF4.

The noise components at approximately 40kHz are eliminated from the demodulated output, and the squelch circuit comprising noise amplifier Q19 and Q20 : 2SC2712 and comparator IC2 (b/2) is operated to produce an FM squelch signal.

The FM AF signal is passed through the deemphasis circuit, and amplified by FM AGC amplifier IC3 : μPC1158H2. If the deviation of the ANT input is 3kHz or more, the circuit keeps the audio output constant and prevents large change in volume. The FM AF signal and the AM AF signal detected by D21 and D22 : RLS73 are output from the FAAF terminal (CN7).

The AF signal from the DAF2, SCAF, or FAAF terminal is applied to AF unit (X49-3050-00). The signal from the DAF2 and SCAF terminals is processed by the CW VBT circuit, and is then applied to the AF amplifier IC7 (a/2) : NJM4558M. The signal from the FAAF terminal is directly applied to AF amplifier IC7 (a/2) : NJM4558M.

The sub received signal is passed through buffer Q7 : 2SK520 and the low-pass filter of the RF unit. The signal is mixed with the sub VCO signal in first sub mixer Q8 to Q11 : 2SK520. The output is converted to the first sub IF signal of 40.055MHz. The unwanted signal components are eliminated from the signal when it passes through MCF (XF1) with 15kHz bandwidth. When the motor is on, the RF transmit signal is applied to the first sub mixer.

CIRCUIT DESCRIPTION

The first sub IF signal applied to the IF unit from the SUB IF terminal (CN7) is amplified by Q1 : 3SK131, and is mixed with the HET signal (50.7MHz) in mixer Q2 and Q3 : 2SK520 and converted to the second IF signal (10.695MHz). This signal is separated into two channels; one is supplied to the noise blanker circuit, and the other is amplified by second IF amplifier Q5 : 3SK131, which also acts as a noise blanking gate, and goes to the second IF circuit. This filter circuit has a 2.2kHz MCF (XF1) and 500Hz crystal filter (XF5). One of these filters is selected according to the data from the digital unit.

The 10.695MHz signal from the second IF filter is further amplified by second IF amplifier Q9 and Q10 : 3SK131, product detected by IC1 : AN612, and output from the SAF terminal (CN15) as an AF signal.

This sub AF signal goes to the AF unit, where it is separated into two channels; one for sub reception and one for the monitor. For sub reception, the signal is applied to IC7 (b/2). For the monitor, the signal is output to the monitor VR.

The main AF and sub AF are amplified separately by IC7, passed through mute circuit Q8 and Q9 : 2SD1757K, and output to the main and sub AF VR. In CW mode, the sub AF can be passed through the AF VBT circuit.

The AF signal, having passed through the main AF VR is mixed with the signal that has passed through the monitor VR in IC8 (a/2) : NJM4558M. The mixed signal is amplified and output to the control unit (X53-3380-00) from the AF terminal (CN11). The AF signal, having passed through the sub AF VR, enters the control unit (X53-3380-00), and is amplified by IC5 (a/2) : NJM4558M. The sub AF signal and main AF signal from the MAF terminal are converted to mono, mixed, or stereo signals by the analog switch, and amplified by AF power amplifier IC4 and IC6 : μPC2002V to drive the speaker.

	PHONES output		SP output	
	Left side	Right side	EXT	INT
Mono	M + S	M + S	M + S	M + S
Mixed	M + S' (S > S')	S + M' (M > M')	M + S' (S > S')	S + M' (M > M')
Stereo	M	S	M	S

Main AF signal: M; Sub AF signal: S
The mixed and stereo signal levels are adjusted according to the total volume for mono.

Table 6 AF output state for each mode

1. Filters ratings

Item	Rating
Nominal center frequency and deviation	40.055MHz ± 0.75kHz or less
Pass bandwidth	fo ±7.5kHz or more at 3dB
Attenuation bandwidth	30dB or more at fo ±25kHz 60dB or more at fo ± 150kHz Spurious : 30dB or more
Guaranteed attenuation	60dB or more at fo ±(150 to 1000kHz)
Ripple	1.5dB or less
Insertion loss	4dB or less
Input and output impedance	4.2kΩ / −1pF

MCF (L71-0275-05) : RF unit XF1

Item	Rating
Nominal center frequency	73.05MHz
Pass bandwidth	±7.5kHz or more at 3dB
Attenuation bandwidth	±30kHz or less at 40dB
Ripple	1.0dB or less
Insertion loss	3.0dB or less
Guaranteed attenuation	70dB or more at fo + (500 to 1000kHz) 70dB or more at fo − (200 to 1000kHz)
Center frequency deviation	Within ±1.5kHz at 3dB
Input and output impedance	2kΩ ± 10%

MCF (L71-0401-05) : IF unit XF2

Item	Rating
Nominal center frequency	8830kHz
Pass bandwidth	fo ±3.0kHz or more at 6dB
Attenuation bandwidth	fo ± 16.0kHz or less at 60dB fo ± 13.0kHz or less at 50dB
Guaranteed attenuation	70dB or more within fo ± 1MHz
Ripple	Within 1.0dB
Insertion loss	Within 1.5dB
Input and output impedance	1850kΩ / 2pF

MCF (L71-0266-05) : IF unit XF4

CIRCUIT DESCRIPTION

Item	Rating
Nominal center frequency	8830kHz
Center frequency deviation	Within ±150Hz at 6dB
Pass bandwidth	±1.3kHz or more at 6dB
Attenuation bandwidth	±1.7kHz or less at 20dB ±2.5kHz or less at 60dB ±3.4kHz or less at 80dB
Ripple	2dB or less
Insertion loss	6dB or less
Guaranteed attenuation	80dB or more at fo ±(3.4kHz to 1MHz)
Input and output impedance	600Ω / 15pF

MCF (L71-0222-05) : IF unit XF3

Item	Rating
Nominal center frequency	10.695MHz
Center frequency deviation	Within ±200Hz at 6dB
Pass bandwidth and attenuation bandwidth	2.2kHz or more at 6dB ±1.5kHz or less at 20dB ±2.4kHz or less at 60dB
Ripple	2dB or less
Insertion loss	5dB or less
Guaranteed attenuation	60dB or more within ±40kHz
Input and output impedance	1.2kΩ ± 5% / 6pF ± 5%

MCF (L71-0249-05) : IF unit XF1

Item	Rating
Nominal center frequency	8830.0kHz
Center frequency deviation	Within ±70Hz at 6dB
Pass bandwidth	±250Hz or more at 6dB
Attenuation bandwidth	±900Hz or less at 60dB
Guaranteed attenuation	80dB or more at fo ±(2kHz to 1MHz)
Ripple	2dB or less
Insertion loss	With in 5dB ± 2dB
Input and output impedance	600Ω / 15pF

Crystal filter YK-88C-1 (L79-0847-05) : IF unit

Item	Rating
Nominal center frequency	10695kHz
Center frequency deviation	Within ±80Hz at 6dB
Pass bandwidth and Attenuation bandwidth	500Hz or more at 6dB 2000Hz or less at 60dB
Guaranteed attenuation	80dB or more at fo ±(2kHz to 1MHz)
Ripple	2dB or less
Insertion loss	With in 5dB ± 2dB
Input and output impedance	1200Ω / 6pF

Crystal filter YK-107C (L71-0283-15) : IF unit XF5

Item	Rating
Nominal center frequency	8.830MHz
3dB attenuation bandwidth	±50kHz or more at 8.830MHz
Guaranteed attenuation	35dB or more at 9.285MHz (+455kHz) 45dB or more at 9.74MHz (+910kHz)
Insertion loss	6dB or less Formula = 20 · log (E1/2 · 2E)
Ripple	1.0dB or less (within 3dB band)
Input and output impedance	330Ω

Ceramic filter (L72-0351-05) : IF unit CF1

Item	Rating
Nominal center frequency	455kHz
6dB bandwidth	±6kHz or more (at 455kHz)
50dB bandwidth	±12.5kHz or less (at 455kHz)
Ripple	3dB or less (within 455 ± 4kHz)
Insertion loss	6dB or less
Guaranteed attenuation	35dB or more (within 455 ± 100kHz)
Input and output impedance	2.0kΩ

Ceramic filter (L72-0315-05) : Signal unit CF2

Item	Rating
Nominal center frequency	455kHz
6dB bandwidth	±3kHz (at 455kHz)
50dB bandwidth	±9kHz (at 455kHz)
Ripple	2dB or less (within 455 ± 2kHz)
Insertion loss	6dB or less
Guaranteed attenuation	60dB or more (within 455 ± 100kHz)
Input and output impedance	2.0kΩ

Ceramic filter (L72-0319-05) : Signal unit CF1,3,5

CIRCUIT DESCRIPTION

Item	Rating
Center frequency	455 ± 0.20kHz
6dB bandwidth	2.9 to 3.2kHz
60dB bandwidth	4.7kHz or less
Guaranteed attenuation	60dB or more at 0.1 to 1MHz
Spurious	40dB or more at 600 to 700kHz
6dB ripple	2dB or less
Insertion loss	6dB or less
Input and output impedance	2kΩ

Ceramic filter (L72-0333-05) : Filter unit CF1

Item	Rating
Nominal center frequency	8830kHz
Center frequency deviation	Within ±50Hz at 6dB
Pass bandwidth and attenuation bandwidth	±125Hz or more at 6dB ±600Hz or less at 60dB
Guaranteed attenuation	80dB or more at ±2kHz to ±1MHz
Ripple	2dB or less
Insertion loss	Within 8dB ± 2dB
Input and output impedance	600Ω / 15pF

Crystal filter YK-88CN-1 (L71-0407-05) : Option

Item	Rating
Center frequency	455kHz
Center frequency deviation	Within ±50Hz at 6dB
Pass bandwidth and attenuation bandwidth	±250Hz or more at 6dB ±425Hz or less at 60dB
Ripple	2dB or less
Insertion loss	6dB or less
Guaranteed attenuation	80dB or more within 100Hz to 454.4kHz 80dB or more within 455.6kHz to 2MHz
Input and output impedance	2kΩ ± 5% / 15pF ± 5%

Crystal filter YG-455C-1 (L79-0888-05) : Signal unit

Item	Rating
Nominal center frequency	455kHz
Pass bandwidth and attenuation bandwidth	±1.2kHz or more at 6dB ±1.5kHz or less at 20dB ±2.05kHz or less at 60dB ±2.1kHz or less at 66dB
Ripple	3dB or less
Insertion loss	6dB or less
Guaranteed attenuation	60dB or more at ±20kHz
Input and output impedance	2kΩ ± 5% / 15pF ± 5%

Crystal filter YG-455S-1 (L71-0292-05)

Item	Rating
Nominal center frequency	8830kHz
Center frequency deviation	Within ±150Hz at 6dB
Pass bandwidth and attenuation bandwidth	±900Hz or more at 6dB ±1800Hz or less at 60dB
Guaranteed attenuation	80dB or more at ±2.5kHz to ±1MHz
Ripple	2dB or less
Insertion loss	Within 3dB ± 2dB
Input and output impedance	600Ω / 15pF

Crystal filter YK-88SN-1 (L71-0406-05) : Option

Item	Rating
Nominal center frequency	455kHz
Center frequency deviation	Within 50Hz at 6dB
Pass bandwidth and attenuation bandwidth	±125Hz or more at 6dB ±250Hz or less at 60dB
Ripple	2dB or less
Insertion loss	6dB or less
Guaranteed attenuation	80dB or more within 100Hz to 454.6kHz 80dB or more within 455.4kHz to 2MHz
Input and output impedance	2kΩ ± 5% / 15pF ± 5%

Crystal filter YG-455CN-1 (L71-0239-05) : Option

CIRCUIT DESCRIPTION

2. SLOPE-TUNE and IF VBT

Figure 5 shows the configuration of the receiver related to the TS-950SDX SLOPE-TUNE and IF VBT. The operating principle of SSB-SLOPE-TUNE is explained first. When f_{ML1}, f_{ML3}, and f_{ML4} in Figure 6 are at their normal frequencies, the synthesized bandwidth is indicated by A. When the frequency of f_{ML4} is highered and the frequency of f_{ML3} is lowered by Δf_1, only the third IF filter for the 455kHz band shifts to position B. The synthesized bandwidth is the part overlapped by A and B. When the frequencies of f_{ML1} and f_{ML3} are lowered by Δf_2, only the 8.83MHz second IF filter shifts to position C. The synthesized bandwidth is the part overlapped by B and C. The SSB-SLOPE-TUNE allows these operations to be done independently using two controls.

The TS-950SDX generates the frequencies with the PLL circuit, and controls them by microprocessor. Change amount Δf_1 and Δf_2 is tracked digitally, allowing only the bandwidth to narrow without changing the center frequency of the composite passband.

Next, the operating principle of IF VBT is explained. Designed so the relation between the frequency changes of the PLL data becomes $\Delta f_2 = \Delta f_1$, the synthesized passband widths of the third IF filter (f_{IF3}) and the second IF filter (f_{IF2}) can be varied by only one control.

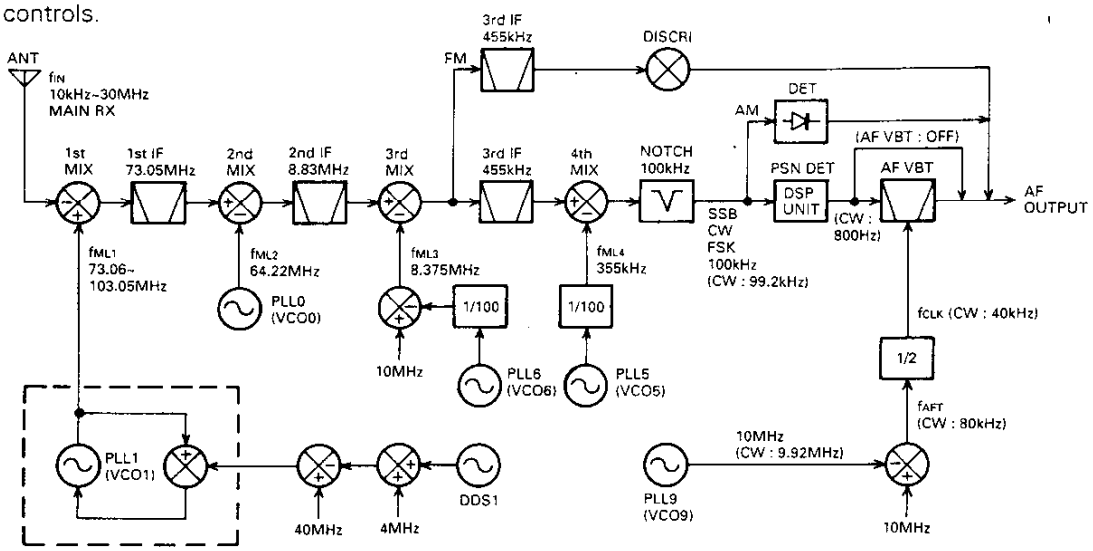

Fig. 5-a · Main receiver frequency configuration

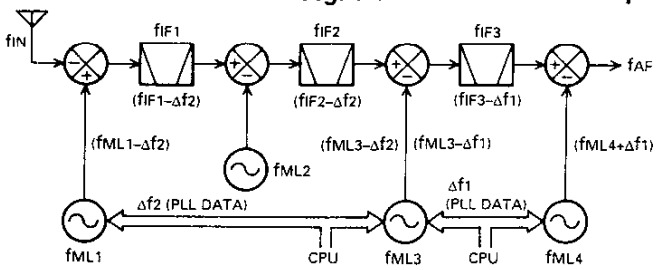

Fig. 5-b Band variable frequency configuration

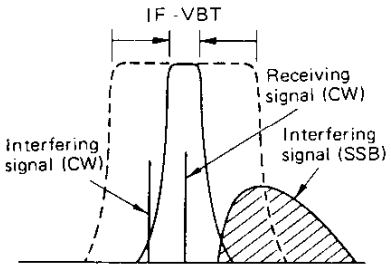

Fig. 5-c IF VBT

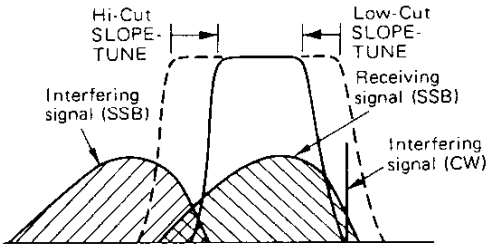

Fig. 5-d SSB-SLOPE-TUNE

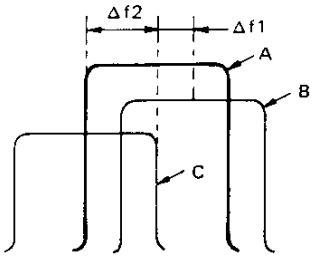

Fig. 6

CIRCUIT DESCRIPTION

3. AF VBT circuit

Filter IC2 : MF10CCWM is inserted into the AF amplifier to eliminate radio interference. This circuit functions only in CW mode when the AF TUNE switch is on.

When the side tone receive pitch is changed by the PITCH control, the center frequency of this filter is also changed. Q can be changed continuously by the AF VBT VR (semi-fixed VR : VR1 on the pc board for the sub).

When SSBC or FSKC goes low in a mode other than FM and AM, Q3 turns on via D3, and IC5 (a/4) and (b/4) turn on. When CWB goes high in CW mode, IC5 (a/4) and (b/4) turn on via R20 and D1. The signal is not passed through filter IC2. If AF TUNE is pressed at this point, AFT SW goes high, Q4 tuns on, and IC5 (a/4) and (b/4) turn off. Since CWC is low, Q5 turns on and IC5 (c/4) and (d/4) turn on. The filter circuit output via IC2 is selected by analog switch IC5.

Center frequency fo of the filter is 1/50th the clock frequency. The signal obtained by rectifying the AFT with a frequency of 40 to 100kHz (in CW mode) by Q1 and dividing it by IC1 is input as the clock, and fo is 400 to 1000Hz, being changed by the PITCH control.

The passband width can be varied by the AF VBT VR connected between pins 17 and 18 in the main receiver. The passband width can be varied by semi-fixed VR1 (10kΩ) in the sub receiver. It can be adjusted to within ±100Hz.

Filter IC2 : MF10CCWM used here contains two blocks comprising a general active filter. Various second filters can be formed by using external resistors. The center frequency depends on the clock frequency, and the filter characteristics and clock frequency can be adjusted and set at will according to the ratio of the external resistances.

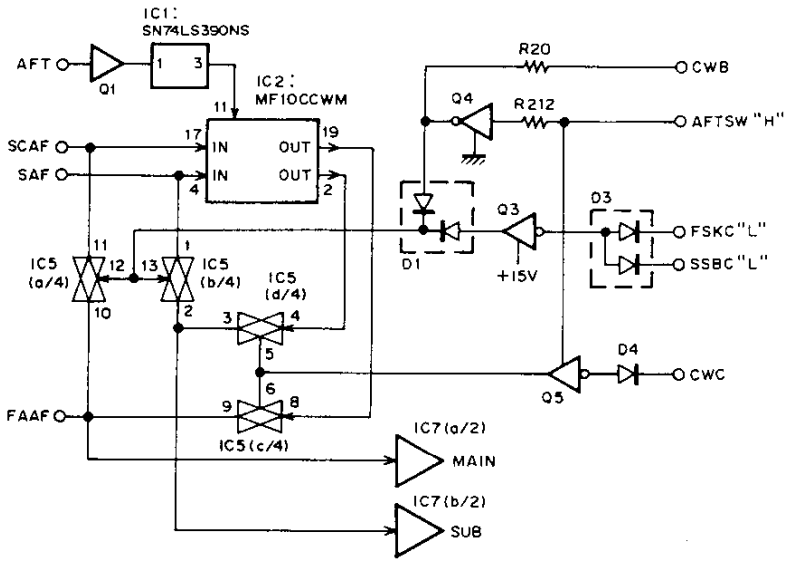

Fig. 7 AF VBT circuit

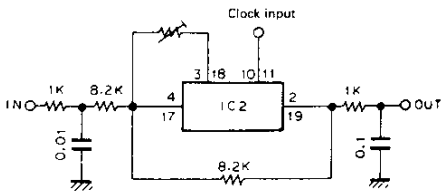

Terminal function of IC2

2, 19	:	Bandpass filter output
3, 18	:	Connection of resistor for changing Q
4, 17	:	Input
5, 16	:	Analog ground (+5 V)
7, 8	:	Power supply (+10 V)
10, 11	:	Clock input

Fig. 8 Basic configuration of IC2 : MF10CCWM

CIRCUIT DESCRIPTION

4. Signal-strength meter circuit

In modes other than main FM, the signal-strength meter circuit comprises operational amplifier IC300 (b/2) : NJM2904M of the IF unit. The 100kHz IF signal is detected by D23 : HSM88AS in the signal unit, amplified by Q11 : 2SK210, Q12 : 2SC2712, and Q13 : 2SA1162, and output to the IF unit as the AGC voltage. If the reference voltage of the signal-strength meter is applied to the + pin (pin 5) of reverse amplifier IC300 (b/2), and the AGC voltage is applied to the – pin (pin 6), the AGC voltage change is output from the output pin (pin 7) to the signal unit as the AGCA signal.

In FM mode, the 455kHz FM IF signal of the signal unit is amplified by Q34 : 2SC2712, and detected by D67 : HSM88AS. This voltage becomes the SM signal, is switched to the AGCA signal by the analog switch, and finally output to the digital unit from the SMET pin.

The sub signal-strength meter circuit also comprises an operational amplifier. The 10.695MHz IF signal of the IF unit is detected by D3 : HSM88AS, amplified by Q12 : 2SC2712, and output as the AGC voltage. If the reference voltage of the signal-strength meter is applied to the – pin (pin 2) of reverse amplifier IC300 (a/2), and the AGC voltage is applied to the + pin (pin 3), the SM signal is output from the output pin (pin 1) and SSMT pin to the digital unit.

The digital unit converts the analog signal to a digital value, performs operations in each mode, and drives the meter.

5. Noise Blanker Circuits

- **NB1**

NB1 is a noise blanker circuit that blanks for short-period pulses, such as ignition noise. The 8.83MHz IF signal generated from the 73.05MHz first main IF signal is amplified by noise amplifier Q40 : 2SK210, Q41, Q42 and Q44 : 2SC2712, passes through buffer Q45 : 2SC2712, and is noise-detected by D30 : HSM88AS. This signal switches Q47 : 2SC2712, turns Q48 : DTA124EK on, and switches the main IF signal line according to the noise. The signal turns Q48 on, turns IF unit Q6 and Q8 : 2SC2712 on, and switches the sub IF signal line according to the main noise.

The 10.695MHz IF signal generated from the 40.055MHz first sub IF signal is amplified by noise amplifier Q26 : 2SK210, Q27 to Q29 : 2SC2714 of the IF unit, passes through buffer Q31 : 2SC2714, and is noise-detected by D33 : HSM88AS. This signal switches Q33 : 2SC2712, turns Q34 : DTA124EK on, switches Q8 and Q6, and switches the sub IF signal line according to the noise. The signal turns Q34 on, and switches the main IF signal line according to the sub noise.

When NB1 turns on, the DC voltage is applied to the Q47 emitter of the AF unit from threshold variable resistor VR12 for the main. The DC voltage is applied to the Q33 emitter of the IF unit from threshold variable resistor VR12 for the sub. The NB effect can be adjusted by changing the emitter voltage.

CIRCUIT DESCRIPTION

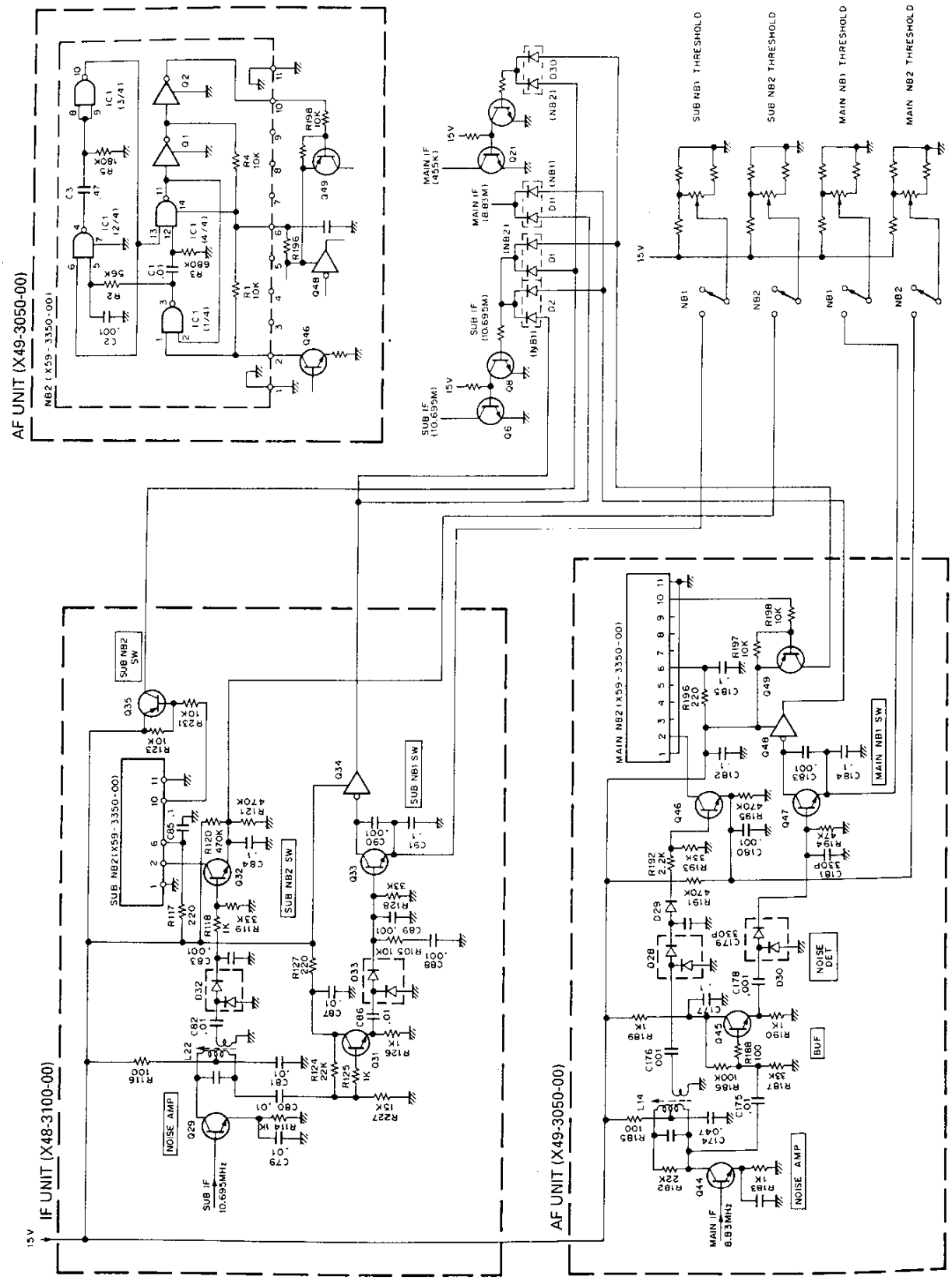

Fig. 9 Noise blanker circuit configuration

CIRCUIT DESCRIPTION

- **NB2**

NB2 is a noise blanker circuit that blanks noises having a comparatively long period and a large pulse width, like woodpecker noise.

For the main NB2, the noise signal amplified by noise-amplifiers Q40, Q41, Q42, and Q44 of the AF unit is noise detected by D28 : HSM88AS in the same way as for NB1. The threshold voltage of the Q46 : 2SC2712 emitter is varied by VR12. The Q46 output enters the NB2 module (X59-3350-00) to generate a pulse width and period synchronizing with the woodpecker noise.

For the sub NB2, the noise signal amplified by the noise amplifiers Q26 to Q29 is noise detected by the IF unit D32 : HSM88AS in the same way as for NB1. The threshold voltage of the emitter Q32 : 2SC2712 is varied by VR12. The Q32 output enters the NB2 module unit (X59-3350-00) to generate the pulse width and period synchronizing with the woodpecker noise.

The NB2 switching signal detected by the main IF and the NB2 switching signal detected by the sub IF switch the main and sub IF signal lines in the same way as for NB1.

The IC1 : TC4011BF (1/4), (4/4), and (2/4), (3/4) in the module unit are set to a pulse width of 40ms. Normally, the woodpecker noise has a pulse width of 3 to 4ms and a period of 80 to 100ms. Some woodpecker noises have a period of about 50ms though rare. Therefore, even a woodpecker noise with a large pulse width can be blanked by switching the noise in a 5ms interval. However, if a noise with a period of several ms like an ignition noise is blanked in a 5ms interval, the signal receive time becomes zero. To prevent it, a one-shot multi is composed of IC1 (2/4) and (3/4) so that the next pulse is not blanked for 40ms after one shot is issued from (1/4) and (4/4).

Transmitter Circuit Configuration

The transmitter system configuration is shown in Figure 10. The transmitter system operates as a quadruple conversion system in SSB, CW, and AM modes, and as a double conversion system in FM mode.

The audio signal from the microphone enters the switch unit (A) (H/10) from the microphone connector board of the switch unit (A) (D/10). The signal is amplified by the MIC AMP module and is passed through buffer amplifier Q17 : 2SC2712 and split into the SSB, AM MIC system and FM, VOX system. The input from the rear panel enters from PHONE IN and ACC2 on the IF unit, is amplified by Q42 : 2SC2712, and matched with the input of Q17 of the switch unit (A) (H/10).

The SSB, AM MIC system of the switch unit (A) (H/10) is split to the MIC GAIN VR and the PROC IN VR on the same board. When S59 of the switch unit (A) (G/10) is on , PROC IN is selected. When S59 is off, the MIC GAIN is selected.

The FM and VOX signals of the switch unit (A) (E/10) are switched to the FM and VOX systems. The FM signal enters the FM MIC AMP circuit of the AF unit, and the VOX signal enters the VOX circuit of the AF unit via the VOX GAIN VR of the switch unit (A) (E/10).

The SSB, AM MIC signals enter the signal unit and are output to the DSP unit as the DSP MIC signal. The 455kHz IF signal modulated by the DSP unit enters the signal unit again, is amplified by Q27 : 3SK131, passed through buffer Q25 : 2SC2712, and output from the signal unit.

The speech processor can be operated in SSB only. In FSK, it is automatically switched to the processor. When the speech processor is on, the SSB signal branched from the Q27 output is amplified by Q33 : 2SC2712, and the components above a certain level are clipped. The signal is amplified by Q30 : 3SK131. The output level of the speech processor is varied by changing the second gate voltage of Q30. The output level is altered by VR1 : PROC OUT of the switch unit (A) (H/10). The Q30 processor output is passed through ceramic filter CF5, and is switched to the output when the Q25 processor is turned off by D60 to D62 : RLS73 x 3. It is output from the signal unit.

CIRCUIT DESCRIPTION

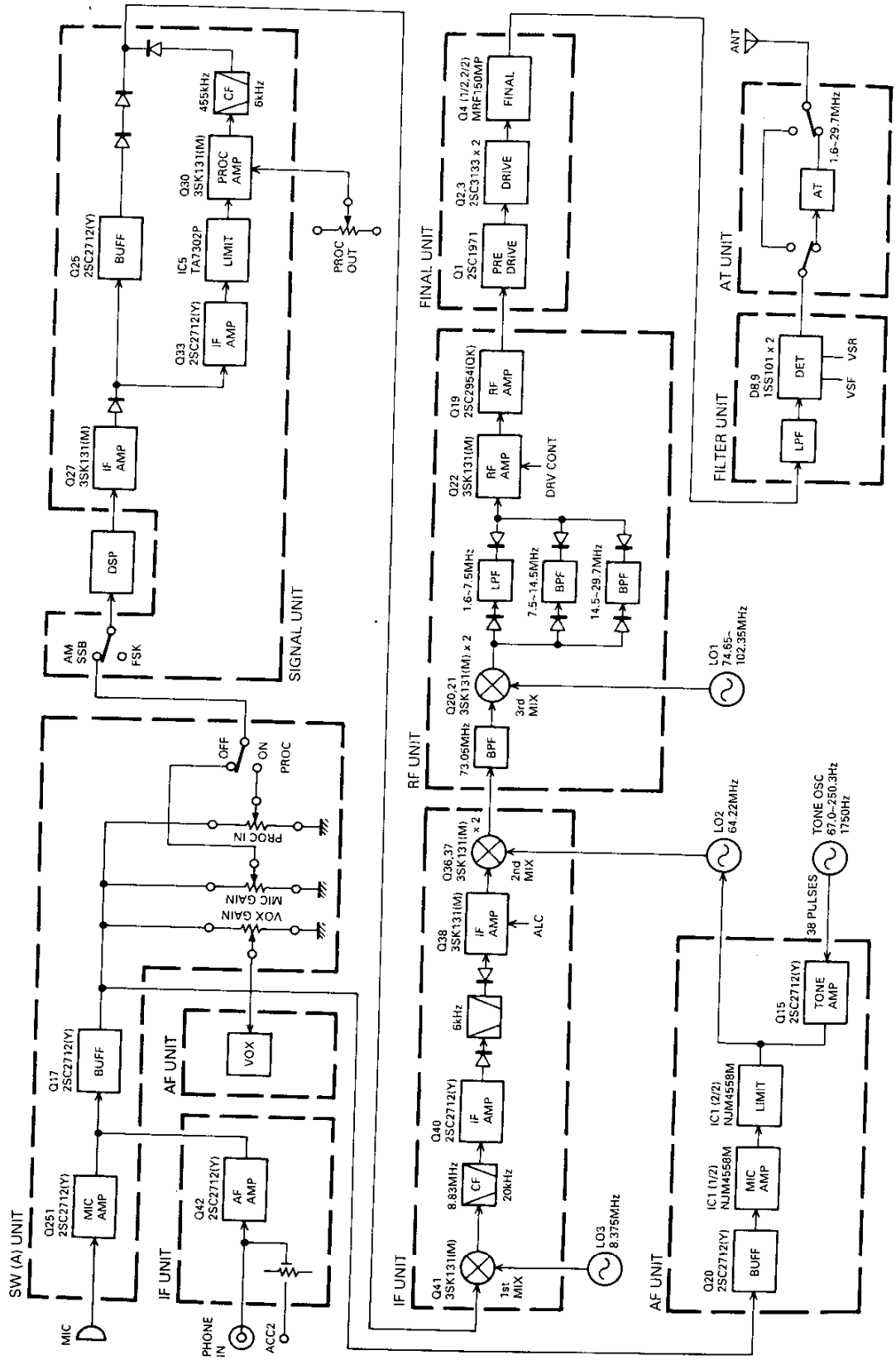

Fig. 10 Transmitter circuit block diagram

CIRCUIT DESCRIPTION

The signal output from the signal unit enters the IF unit and is mixed with the 8.375MHz third local signal by Q41 : 3SK131 to make a 8.83MHz signal. This signal is passed through ceramic filter CF1, amplifier Q40 : 2SC2712 for matching the next crystal filter, and the 8.83MHz IF filter. The SSB, FM, FSK are passed through XF3 : YK-88S, and CW and AM are passed though filter unit (C/3). The filter output is amplified by Q38 : 3SK131. ALC is applied to this Q38.

The Q38 output is mixed with the second local signal of 64.22MHz in Q36 and Q37 : 3SK131 x 2 to make a 73.05MHz signal. This signal enters the RF unit.

In the RF unit, the signal is passed through three LC bandpass filters L93 to L95, is mixed with the first local signal in Q20 and Q21 : 3SK131 x 2, and converted to the target transmit frequency. The output of Q20 and Q21 is passed through the band pass filter which are split to three frequency ranges (to 7.5MHz (low-pass filter), 7.5MHz to 14.5MHz, 14.5MHz to 30MHz (bandpass filter)), amplified by Q22 : 3SK131 and Q19 : 2SK2954, and output from DRIVE OUT on the rear panel. The signal enters the final unit from DRIVE IN through the jumper cable at the rear.

The signal is amplified to 100W by Q1 : 2SC1971, Q2 and Q3 : 2SC3133 x 2, Q4 : MRF150MP. Harmonics are eliminated from the signal by the filter unit, and the signal is emitted from the antenna.

For FSK, the mark and space signals are generated by the DSP unit and output to the signal unit. In the FSK mode, the speech processor circuit works, performs 10 to 20dB compression, and suppresses the difference in the level between the mark and space.

The FM signal is passed through buffer Q20 : 2SC2712 and the FM MIC AMP module in the AF unit, and modulated to the second local oscillator.

1. ALC Circuit

The level of the forward wave voltage (VSF) detected in the filter unit is adjusted by VR6 and VR7 (VSF) of the control unit and is applied to the differential amplifier comprised of Q1 and Q2 : 2SC2712 x 2.

When VSF is applied to the base of Q1, the emitter voltages of Q1 and Q2 increase and the current flowing through the base of Q2 decreases. Therefore, the collector voltage of Q2 rises. When this voltage exceeds the emitter voltage of Q8 : 2SC2712 (about 1.8V; stabilized by LED D6), the current flows through the base of Q8 and the collector voltage drops. ALC time constant C, R is connected to this collector.

The change in the collector voltage is shifted to about 2.7V by Q11 : 2SK208 and D7 : RLZJ4.7B, matched with the voltage for keying by Q12 : 2SC2712 and D8 : RLS73 to generate the ALC voltage. This ALC voltage activates ALC by lowering the second gate voltage of Q38 : 3SK131 of the IF unit.

2. Power control circuit

Power is controlled (reduced) by lowering the base voltage of Q2 of the control unit. As the base voltage of Q2 is decreased, the emitter voltage of Q1 and Q2 are decreased. This allows Q1 to be turned on even if the base voltage (VSF) of Q1 is low. That is, ALC works to lower the power even if the power is low.

When the power is maximum, Q7 : DTC124EK is on, Q3 and Q5 : DTC124EK x 2 are off, and VR2 (PWR VR) of the switch unit (A) (H/10) is shorted. Therefore, the base voltage of Q2 has the value divided by R3, R4 and PWR VR. When PWR VR is turned to MIN, the base voltage of Q2 is lowered, and ALC starts with low power. When PWR VR is set to MIN, VR5 (MIN) and PWR VR of the control unit are made parallel, and the MIN power can be adjusted by VR5.

The 50W power down during movement is accomplished by turning on S1 of the control unit by turning on Q3. The 100W power is decreased by connecting VR8 (50W) of the control unit in parallel. When the power is reduced to 50W, the power is also reduced if PWR VR is MIN.

CIRCUIT DESCRIPTION

2. Auto tuning mode

The transmission power from the final unit via the filter unit is passed through the current/voltage detection transformer L1 and L2 which use a troidal core. The current and voltage components detected here are rectified by the waveform rectification circuit consisting D4, Q1, D7, and Q2, and then phase compared by IC1 : SN74S74N. The output signals from pins 8 and 9 of IC1 ($\overline{Q}$ and Q) are passed through the switch by IC2 : TC4066BP and are applied to motor drive IC IC4. Variable capacitor VC1 is rotated by the motor M1 so that the phase difference of the voltage and current components decrease.

The voltage and current components detected by L1 and L2 are rectified by germanium diodes D1 and D2 : 1N60 and are applied to the comparator of voltage comparison circuit IC6 : NJM2903S as the amplitude component. The comparator output is passed through switch IC3 : TC4066BP. Motor M2 is driven by another motor drive IC IC5 : BA6109U2 and variable capacitor VC2 is rotated in the direction that decreases the amplitude difference of the voltage and current components.

Variable capacitor VC1 for capacity adjustment is therefore controlled so that the current and voltage phases match. Variable capacitor VC2 for resistance adjustment is controlled so that the current and voltage amplitude difference decreases. (SWR : 1 when the phases match and the amplitude difference is 0).

The speeds of motors M1 and M2 are determined by the duty cycle of the pulse input to control input pin 8 of IC4 and IC5, and controlled by the standing wave ratio (VSWR) calculated by the digital unit CPU and preset and manual tuning speed.

Pulse signal SPED output from the digital unit is passed through Q5 : DTC114EK, amplified by Q4 : 2SA1204, and input to IC4 and IC5 as a control pulse.

If the SWR is 3 or more, the motor runs at high speed since the duty cycle of the motor drive voltage pulse is 100%. If the SWR is 2, the duty cycle becomes about 50%, and the motor runs at low speed.

The matching circuit is a T type, and the tap position from 1.8 to 30MHz is switched by seven relays, K101 to K103 and K105 to K108.

Position detection VRs VR101 and VR102 are linked to the rotation axes of variable capacitors VC1 and VC2 with a gear ratio of 1 : 1. Voltages of 0 to 5V (POD1 and POD) are produced according to the capacitances of the variable capacitors. This position data is sent to the CPU through the A/D converter in the digital unit, and is used as the reference voltage in the feedback control system for, such operations as preset tuning and manual tuning. The same signal is also used for presetting data and end detection.

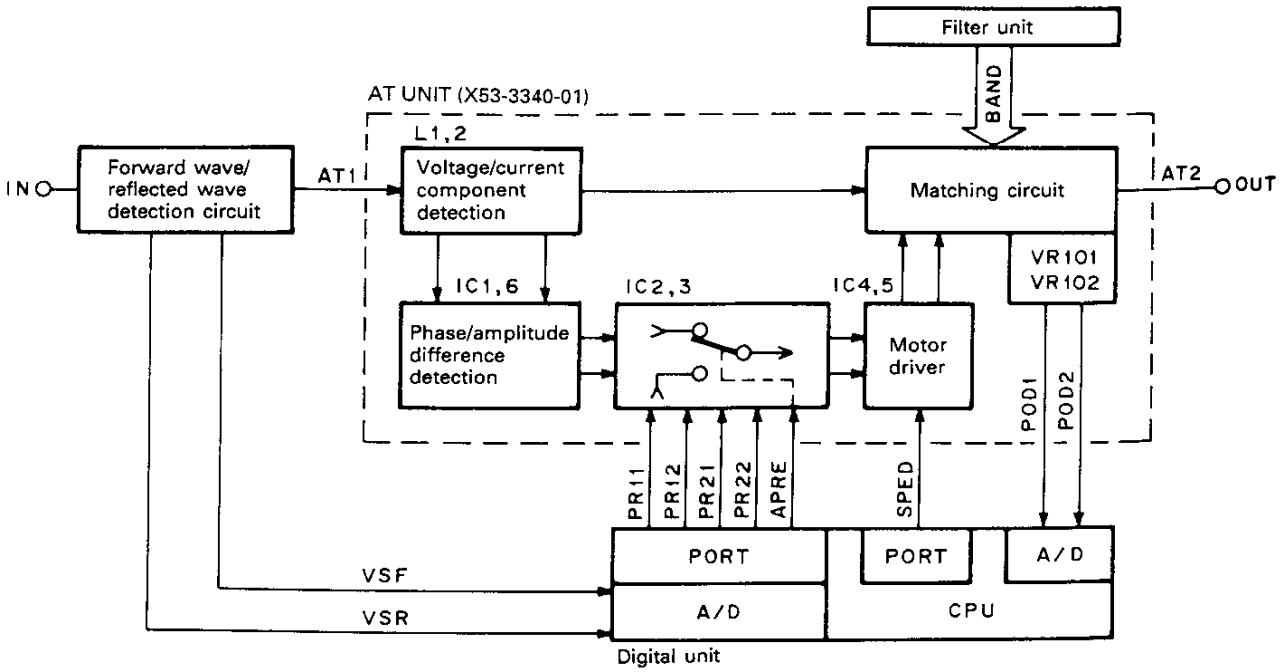

Fig. 14 Auto antenna tuner block diagram

CIRCUIT DESCRIPTION

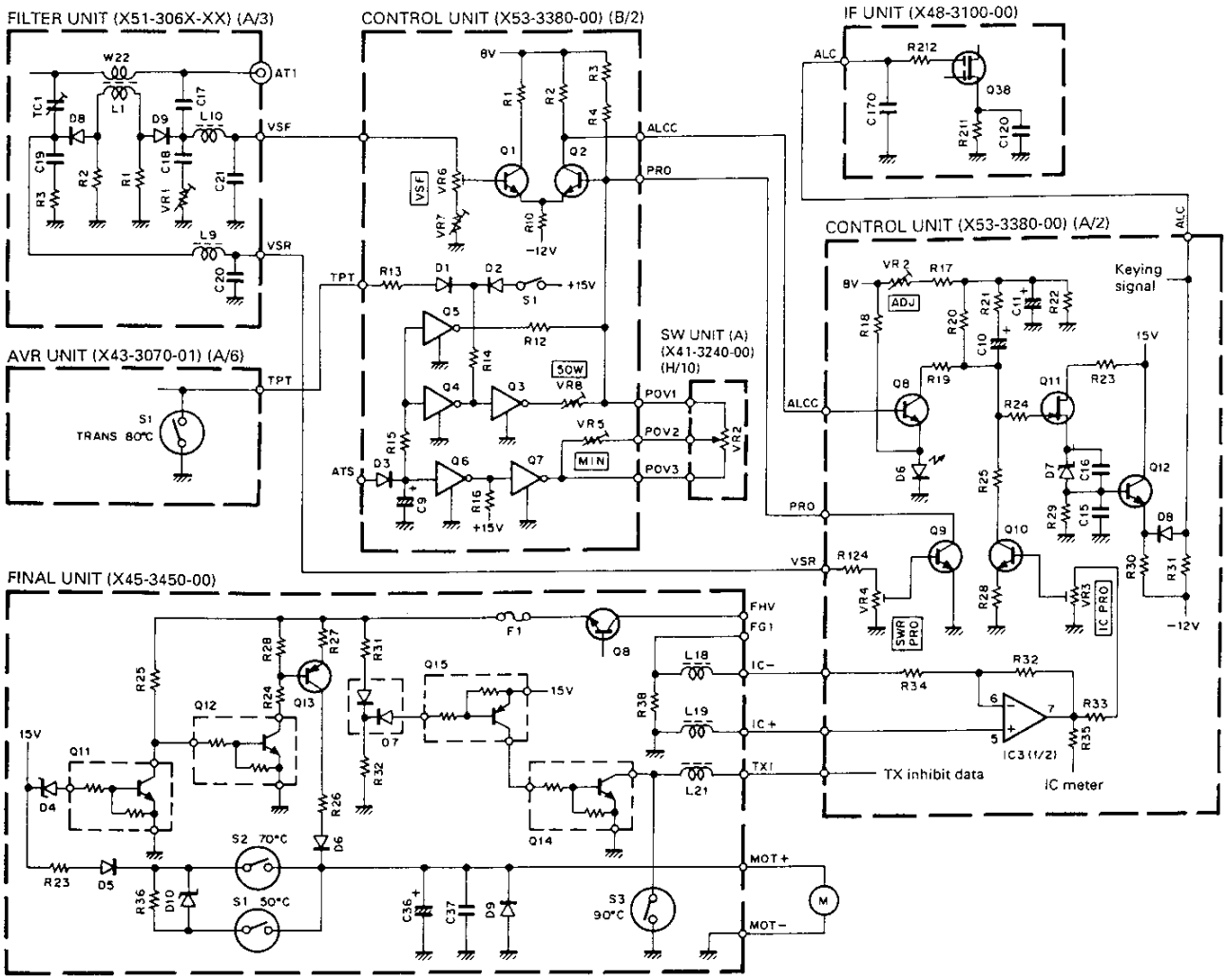

Fig. 11 ALC, power control, and protection circuits

6. Monitor circuit

- **Modes other than FM**

The TS-950SDX monitor circuit uses a sub receiver to receive and monitor the signals converted to transmission frequencies, unlike the conventional monitor circuit that monitors the IF signals. The monitor circuit produces the same monitor tone as when another receiver monitors the transmitted signal. (In the AM mode, the signal is passed through the SSB filter and product detected.)

The signal taken from the band pass filter output before Q33 of the RF unit goes to the first mixer (Q8 to Q11) of the sub receiver via D49. Since the level is too high, it is attenuated by Q37 only when the signal is monitored at the filling point, and is further attenuated by Q4 of the IF unit. The amount of attenuation in the IF can be adjusted by VR1, and the degree of AGC can be changed.

The sub receiver output SAF is passed through IC6 (c/4) and IC10 (d/4) of the AF unit, applied to IC8 (a/2) via the monitor volume. It is amplified and output in the same way as in receive mode.

- **FM mode**

The signal output (pin 2) having passed through the clipper and preemphasis circuit in the FM microphone amplifier circuit (X59-3000-03) is corrected by the deemphasis circuit. The resulting signal is passed through IC10 (c/4), applied to the IC10 (d/4) input (pin 10), and amplified and output as in the modes other than FM.

CIRCUIT DESCRIPTION

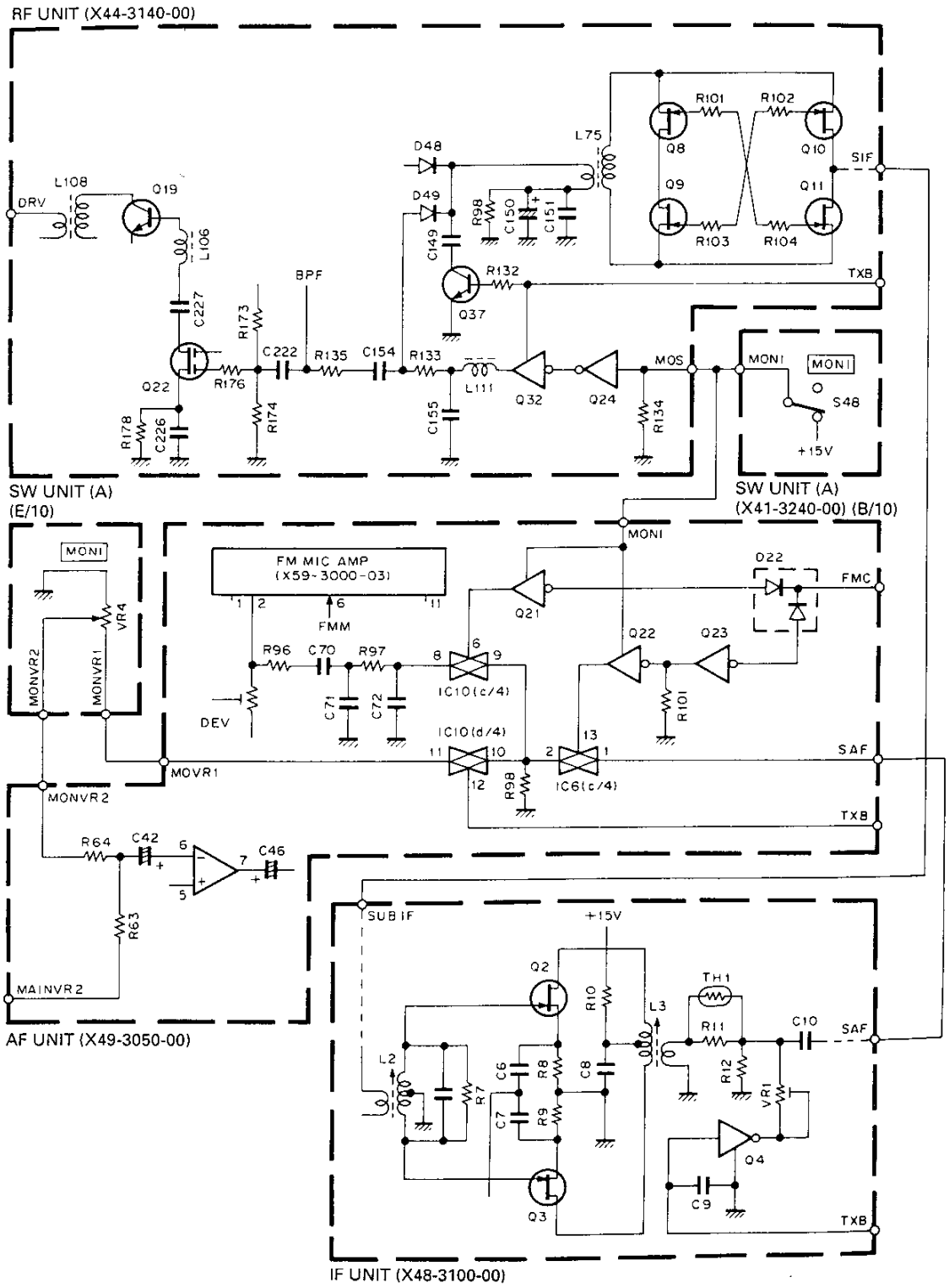

Fig. 12 Monitor circuit

CIRCUIT DESCRIPTION

7. Side tone generation circuit

The AFT (80kHz when the PITCH control is at the center; the frequency is changed to 40 to 100kHz by turning the control; 150kHz in the SSB mode) generated by the CAR unit is rectified by Q1. The 400 to 1000Hz square wave divided by 100 by IC1 is applied to switched capacitor filter IC3 to obtain a sine wave interlocked with the CW receive pitch. The 20 to 50kHz signal obtained by dividing AFT by 2 by IC1 is given to the clock that determines the center frequency in IC3.

Keying switches Q7 by the KEY signal that goes high when the key is down and that is output from the control unit. It turns on the bias of mute transistor Q6 to produce the sine waves intermittently.

When the monitor is on, Q6 is biased through R27 to turn off the side tone.

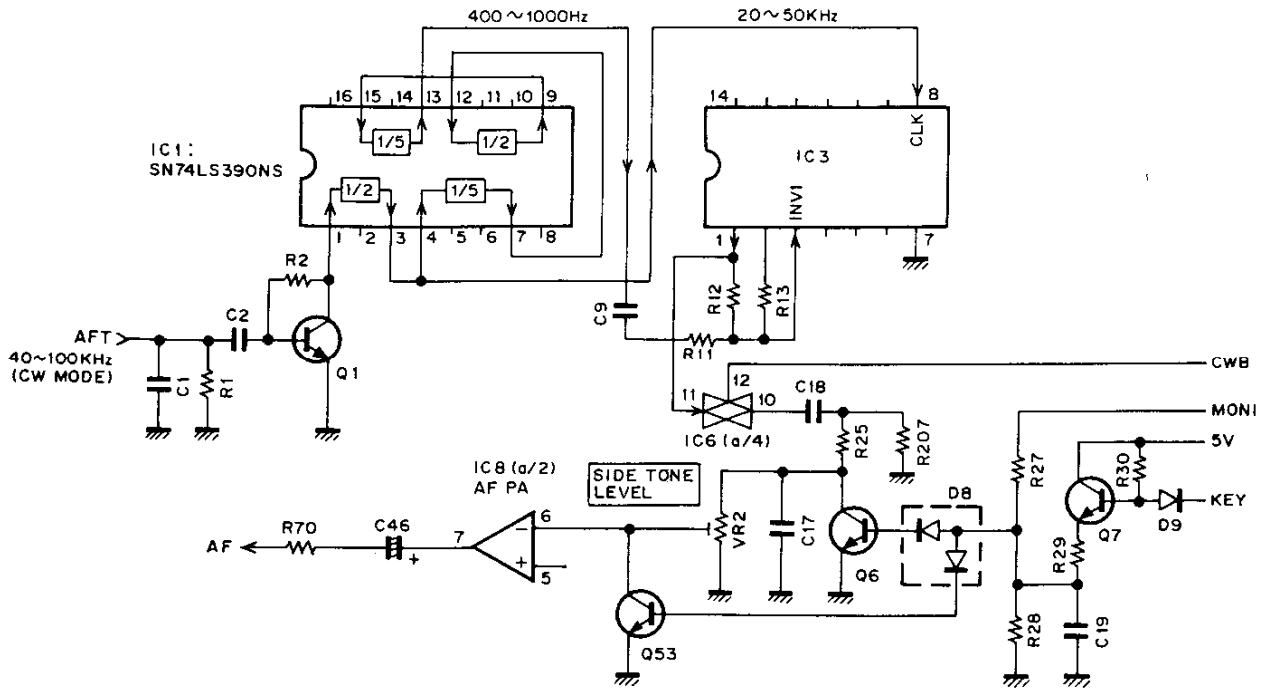

Fig. 13 Side tone circuit

AT Unit

1. Auto antenna tuner

When the AUTO/THRU switch is set to AUTO, the logic is controlled by the digital unit, ATA goes low, the AUTO/THRU switching relay K1 is made, and AT is inserted to prepare for tuning. If the position of variable capacitor VC1 or VC2 is not the preset position of the band, presetting is performed. The AT tune and transmission do not occur until presetting ends.

When AT TUNE is turned on with this condition, ATS goes high, the CW mode is set, and the transmission output becomes about 10W. If the VSWR is lower than 1.2, the tuning is completed and auto antenna tuning ends.

If the VSWR is greater than 1.2, the motor control pulse duty (described later) is controlled according to the VSWR.

The motor speed is determined by a microcomputer. Its direction is controlled by phase comparator IC1 and amplitude comparator IC6 if the APRE is low, and controlled by the microcomputer if the APRE is high.

CIRCUIT DESCRIPTION

For AT tuning, the power is lowered to about 10W. The AT start signal (ATS) turns on Q5 and the base of Q2 is grounded via R12 to lower the power.

Q4 : DTC124EK is used to turn off the 50W power down circuit during movement. Q6 : DTC124EK is used to turn off PWR VR to prevent influence of PWR VR on tuning.

If the power control is used only when the ALC starts, it works deeper as the power is lowered. Therefore, the PWR VR of the switch unit (A) (H/10) has two functions: one controls ALC, and the other changes the second gate voltage (PCV) of Q22 : 3SK131 of the RF unit. By changing the gate voltage, the difference between the maximum and minimum gains is approximately 10dB to prevent excessive ALC when the power is low.

The gain is also reduced during AT tuning. When the ATS signal arrives at the RF unit, PCV is grounded to eliminate the influence of PWR VR, and the second gate voltage is made constant (nearly the same value as the PWR VR MIN) by the voltage obtained by dividing the ATS.

3. Protection circuit

- **SWR protection**

When the reflected wave voltage (VSR) from the filter unit is raised by load variation or AT tuning, Q9 : 2SC2712 of the control unit is turned on, the voltage of the line of the ALC time constant is decreased. The power is lowered by decreasing the drive to protect the final transistor.

- **IC protection**

The current of the final transistor is detected by the voltage across R38 of the final unit. Since the detected voltage is negative, it is inverted and amplified by IC3 (1/2) : NJM4558M of the control unit. The IC3 output turns on Q10 : 2SC2712, reduces the voltage of the line of the ALC time constant and decreases the drive to limit the final transistor current.

When the fuse of the final unit blows, 50V AVR is turned off, TXI is grounded by D7 : MC921, Q15 : DTA124ES, and Q14 : DTC124ES, and transmission is disabled.

4. Temperature protection

If the final heat sink temperature rises to approximately 50°C, temperature switch S1 of the final unit turns on. The current flows to the fan motor through R23 and D5 : 1S1555, R36 and D10 : UPZ4.7B, and the fan motor starts running at low speed. D10 is a zener diode that produces the current for starting the motor.

If the final heat sink temperature rises to approximately 70°C, S2 turns on, and D10 and R36 are shorted. The voltage applied to the motor increases and the fan motor runs at high speed. If the sink temperature reaches 90°C by some failure, S3 turns on, TXI is grounded, and transmission is disabled.

If the power transformer temperature rises to approximately 80°C, temperature detection switch S1 of the AVR unit turns off, the TPT signal (about 5V) turns on Q3 of the control unit, and the power is lowered to 50W to protect the transformer.

5. Safety discharge cooling circuit

70 to 80V is applied to the electrolytic capacitor of the 50V power supply. When the power switch is turned off, the charge voltage does not drop soon. Since the 15V power supply voltage falls soon when the power supply turns off, the fan motor consumes the charged voltage of the 50V power supply.

The 15V power supply voltage drop is detected by the final unit D4 : MTZ4.7JC. If the voltage drops to approx. 10V, Q11 : DTC124ES turns off. The collector voltage of Q11 rises, and Q12 : DTC123TS turns on and Q13 turns on. The 50V line runs the fan motor through R27, Q13, R26, and D6, and discharges slowly.

CIRCUIT DESCRIPTION

The VR used here is a normal one, not an endless one. Since the rotation angle of this VR is limited, the rotation range for the TS-950SDX is from the minimum capacitance to the maximum capacitance plus an allowance.

Using this control system, like preset tuning, which will be described later, POD1 and POD2 are monitored by the microprocessor. If the lower limit voltage of 0.6V or the upper limit voltage of 4.2V is reached, the microprocessor detects that the voltage is close to one limit. To return the voltage to the opposite side, APRE is made high. If the variable capacitor is VC1, and the voltage is close to the lower limit with respect to PRE1, the voltage near the upper limit is output. If the voltage is close to the upper limit with respect to PRE1, the voltage near the lower limit is output.

The other variable capacitor, VC2, outputs the voltage read by POD2 to PRE2 as it is. If the variable capacitor voltage exceeds the specified limit, the variable capacitor returns to the other limit. The other variable capacitor remains in the same position.

If APRE is high, the motor rotation direction is determined by the CPU unless auto-tuning is being performed.

The logic for PR11 to PR22 is the same as for IC4 and IC5 : BA6109U2. The signal output from the digital unit passes through IC2 and IC3 : TC4066BP and enters IC4 and IC5.

		PR11	PR12	PR21	PR22
Motor 1	Normal rotation	H	L	–	–
	Reverse rotation	L	H	–	–
Motor 2	Normal rotation	–	–	H	L
	Reverse rotation	–	–	L	H

3. Manual tuning

Hold down the USB LSB key and switch the power on. Select the menu number 20 with the click encoder, turn the display off with the band down key, and press the CLR key to return to normal mode. Manual tuning is now ready.

The main encoder controls VC1, and the sub-encoder controls VC2. The capacitance of each variable capacitor changes from maximum to minimum when the encoder is given about eight turns.

4. Preset tuning

When auto-tuning or manual tuning ends, the position of the variable capacitor is stored in memory by the microprocessor as preset data for that band.

When the band is changed after tuning has been performed in another band, APRE goes high, the motor is controlled by the microprocessor, and preset tuning is performed. During preset tuning, auto-tuning or signal transmission is inhibited even if the AT TUNE switch is pressed or transmission becomes ready.

The initial preset data when the microprocessor is reset includes standard data for a 50Ω load on each band.

CIRCUIT DESCRIPTION

Standby Control and Timing

Standby control and timing is performed by the control unit (X53-3380-00). The input control signals are listed below.

- SS : Standby switch. Active low.
- $\overline{SS}$: Inverted SS. Base for producing each timing voltage.
- CSS : Standby signal to the microprocessor. Active low.
- ATS : Standby signal from the antenna tuner. Active high.
- ESS : Standby signal from the personal computer control. Active high.
- KEY : Keying signal from the keyer. Active low.
- KSW : Signal indicating whether a key is inserted into the key jack. GND : When a key is inserted into the key jack.
- TXI : Transmission disable signal from the microprocessor. Low: Disabled.
- VOXQ : Standby signal from VOX. Active high.

The output control signals are listed below.

- CTXB : Signal that generates TXB (Transmission 15V). Active high.
- TXB : Transmission 15V
- KYB : Keying signal generated by the keyer. Active high.
- CKY : Keying signal with timing. Active high.
- RXB : 15V in receive mode. Same timing as the inverted TXB.
- RBC : Receive control signal with timing. Active low.

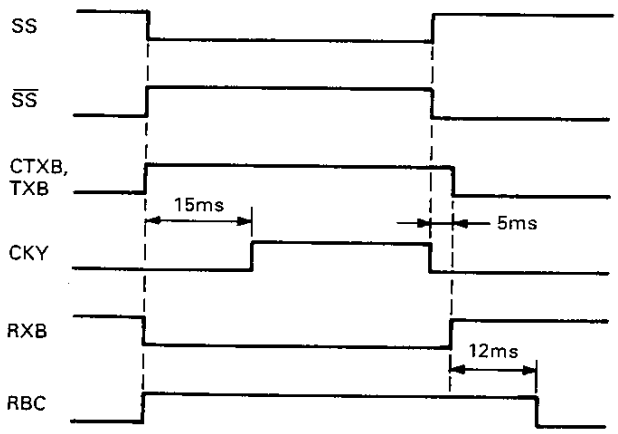

Fig. 15 Basic timing chart for standby

1. Manual standby (other than CW)

- **Reception → Transmission**

If pin 5 (TXI) of the CWT module (X59-3660-00) is high, transmission is possible when the standby switch is pressed, and the SS line is grounded, Q203 and Q202 in the module turn on and 15V is output to pin 2 from the collector of Q202. The voltage $\overline{SS}$ passes through pin 4 of IC15 and D27, and enters pin 2 of the TRX module (X59-3680-00) as CTXB. It turns Q153 and Q152 on and generates TXB from pin 5. The collector of Q152 goes high, Q154 turns on, Q155 and Q151 turn off, and RXB from the collector of Q151 goes low.

- **CKY generation**

$\overline{SS}$ makes pin 2 of IC10 (NAND gate) high, and triggers pin 4, the A input pin, of IC9 (one-shot multi). The $\overline{Q}$ output is low for 15ms and then goes high. So pin 3 of IC10 goes low 15ms after the standby switch is pressed. Pin 10 of IC11 (inverter) goes high.

Since the CWB signal (high in CW mode) enters pin 13 of IC11, it is low in other modes. So the inverter output pin 12 is always high.

Pin 5 of IC12 (analog switch) is high during full break-in and the switch is on. Pin 13 of IC12 is high during semi-break-in and the switch is on. CKY is output from pins 2 and 3 of IC12 15ms after SS with the same timing for semi-break-in and full break-in.

The CKY signal is output to the outside, and bias is applied to the second transmit mixer. At the same time, the signal goes to pin 4 of the ALC module (X59-3700-00) through D35, passes through integration circuit Q251, which rounds the waveform, and is matched with the negative signal of the ALC to produce the FET gate bias of the transmit IF.

In any mode other than CW, the 15V digital signal for D15 is shorted by Q26 and not input to the ALC module, and the rising edge of the transmission signal is determined by the signal of the integration circuit.

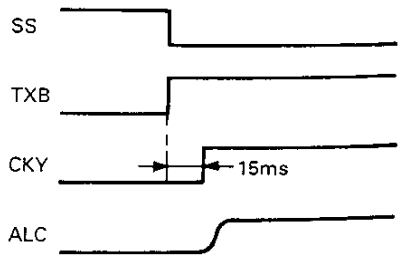

Fig. 16 CKY generation

CIRCUIT DESCRIPTION

- **TX → RX**

When the standby switch turns off, Q203 and Q202 of the CWT module are turned off, and the $\overline{SS}$ signal goes low. The anode of D27 also goes low, but since there is a 5ms time constant circuit comprised of R103, R104, and C58 for the output of pin 2 of IC15 (inverter), the output of pin 4 of IC15 goes low 5ms after $\overline{SS}$.

So the D26 cathode CTXB switches from transmission to reception with this timing, and TXB goes low 5ms after the standby switch is turned off.

When TXB goes low, Q154 in the TRX module turns off, Q155 and Q151 turn on, and RXB goes high.

- **CKY down**

When $\overline{SS}$ goes low, pin 2 of IC10 (NAND gate) goes low, pin 3 goes high, pin 10 of IC11 (inverter) goes low, and the CKY output goes low. This means the CKY goes low when the standby switch is turned off. The ALC waveform output from the ALC module rises, rounded by the time constant of the integration circuit.

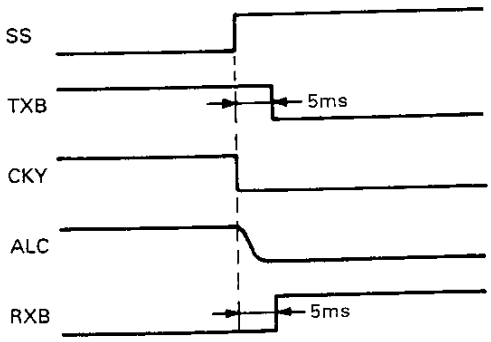

Fig. 17 CKY down

- **RBC generation**

When CTXB goes low, pins 9 and 11 of IC15 (inverter) go low and pin 4 of IC10 (NAND gate) goes low 12ms after CTXB does. This means RXB goes high by the 12ms time constant circuit (consisting of R105, R106, and C59) for pin 8 of the inverter output.

The RBC signal is fed to the base of the NPN transistor of the signal unit (X57-4130-00). This transistor performs the switching operation to ground the 455kHz receive IF circuit. The receiver operates only when RBC is low.

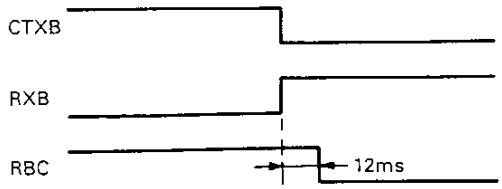

Fig. 18 RBC generation

- **PLL , DDS data and transmission/reception timing signal**

As explained earlier, SS is used at the beginning of each operation. It takes 15ms from SS being grounded until last transmission timing signal CKY is generated. It takes 12ms from RXB going high until RBC goes low. The PLL and DDS data from the microprocessor are operated, and the diode switch and analog switch are switched during that time to assure stable transmission and reception.

2. Timing for full break-in operation

- **Generation of TXB by key down**

When the key is inserted into the key jack, KSW is grounded, pin 9 of the CWT module is grounded, and the Q208 emitter voltage becomes ground level. When the key is down, Q201, Q208, Q206, and Q207 turn on, and the output of pin 6, KYB, goes high. KYB passes through D20, D30, pins 1 and 2 of IC16 (analog switch), and D28, and makes the SS line high. Q24 is turned on through D34, and CSS is grounded to notify the microprocessor of the start of transmission.

When transmission disable signal TXI is low to disable transmission, Q205 and Q204 of the CWT module are turned on and the CWB line is grounded. Q206 and Q207 turn off, and the KYB line goes low. The $\overline{SS}$ line remains low.

When the $\overline{SS}$ line goes high, CTXB goes high through D27, Q153 and Q152 of the TRX module turn on, and TXB is generated. Q154, Q155, and Q151 turn off and RXB goes low.

ioes low
the key
l.
ule turns
gh.

e 12ms
e signal
oin 1 of
e signal

manual
high by
is low.

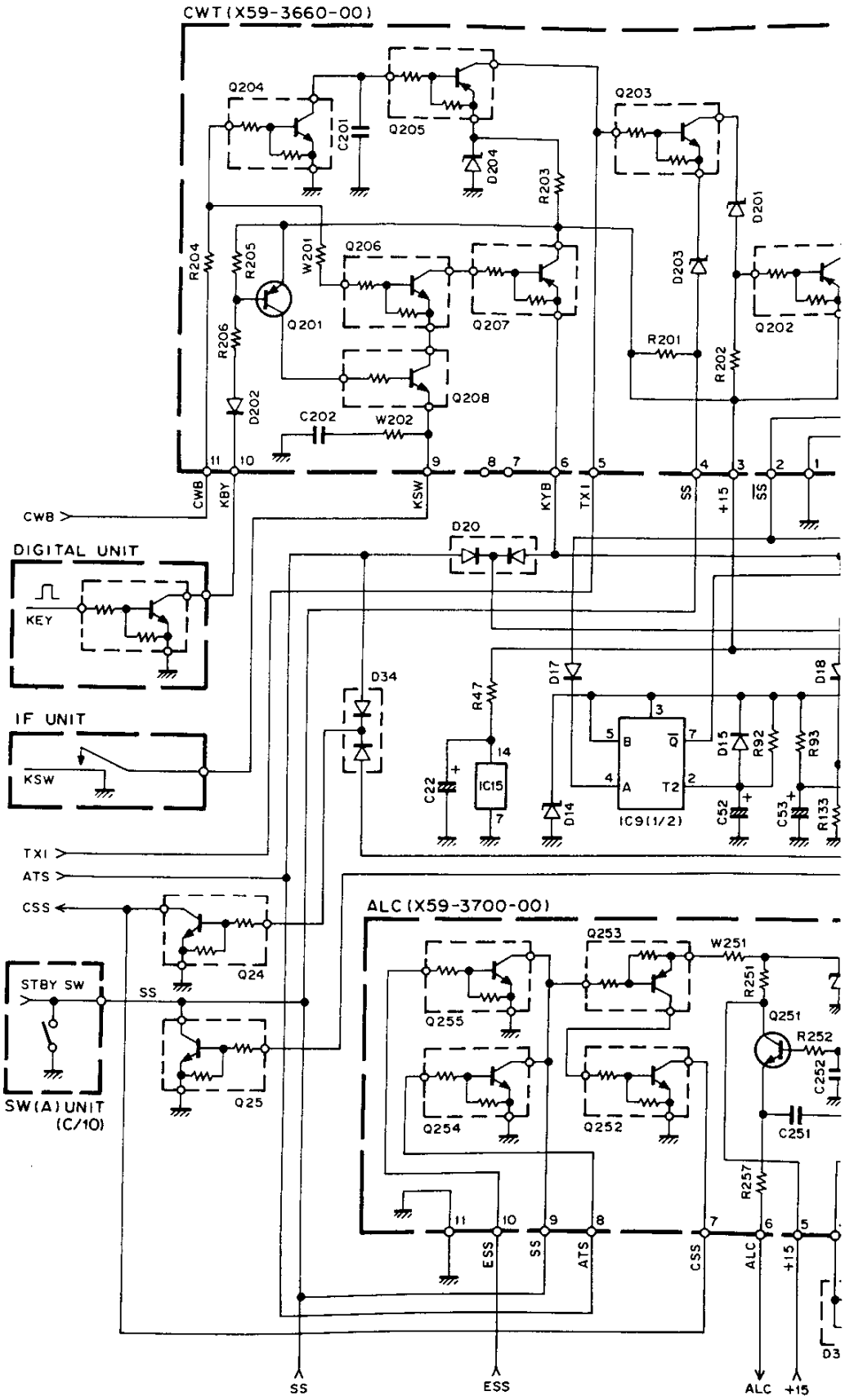

Fi

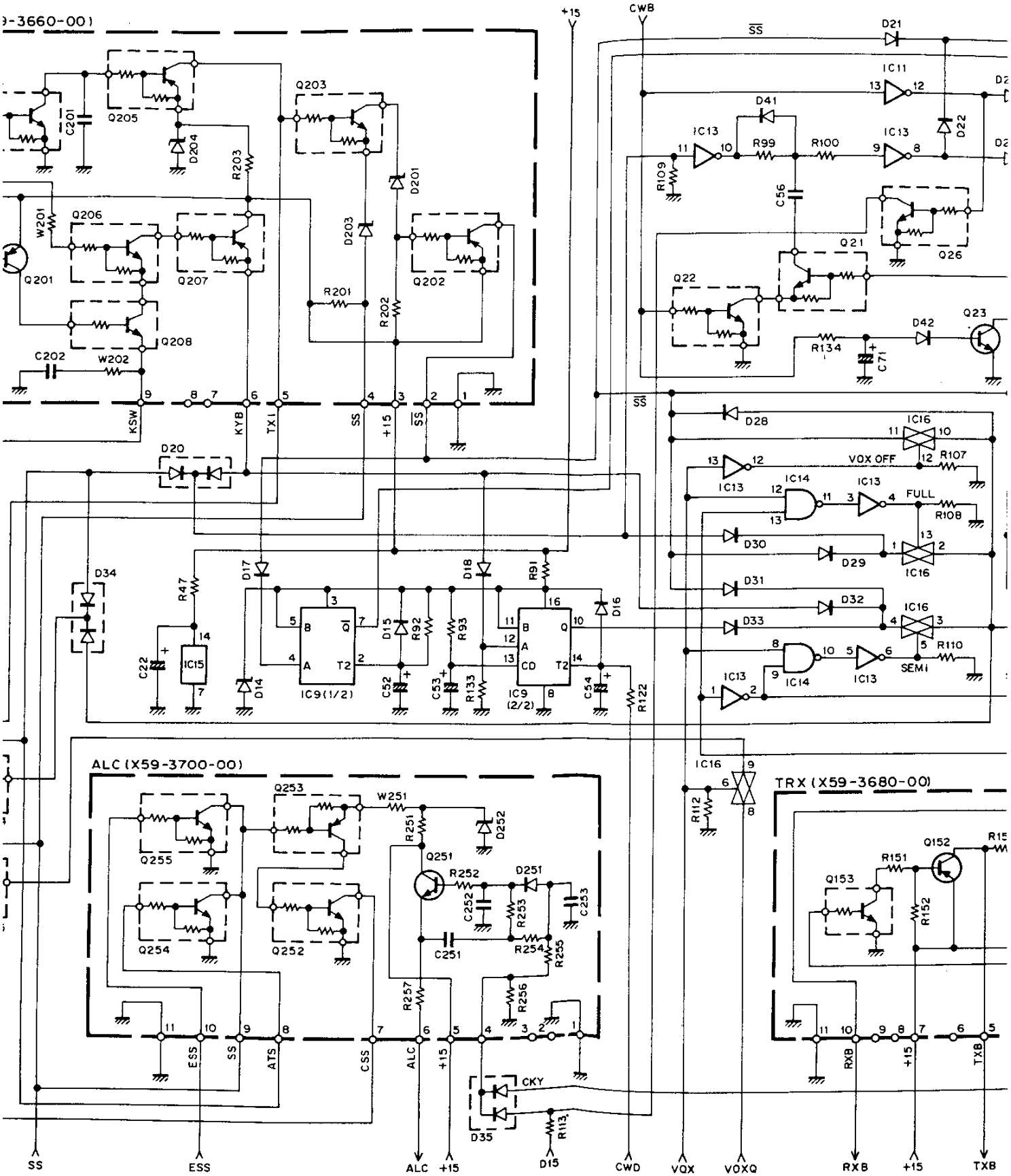

Fig. 20 Standby circuit

UIT DESCRIPTION

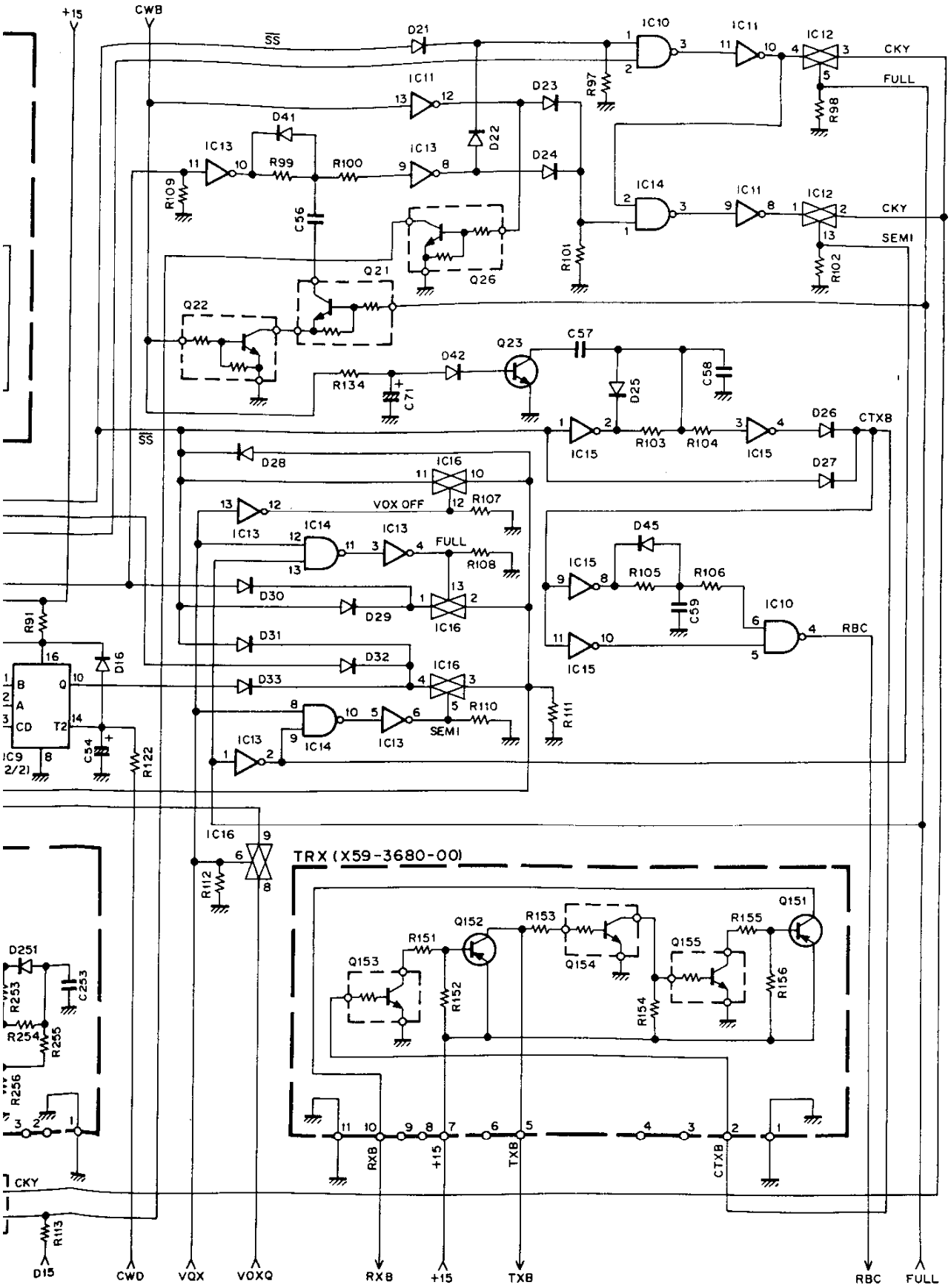

0 Standby circuit

CIRCUIT DESCRIPTION

- **CKY generation**

When $\overline{SS}$ goes high, pin 2 of IC10 (NAND gate) goes high, and the $\overline{Q}$ output of IC9 (one-shot multi) goes high 15ms after $\overline{SS}$ goes high. The output from pin 3 of IC10 goes low 15ms after that.

The output from pin 10 of IC11 (inverter) goes high and pin 5 of IC12 (analog switch) goes high when FULL. Pins 4 and 3 conduct, CKY goes high, and the keying signal is sent to the DSP unit.

- **Generation of RXB by key up**

When the key is up, the $\overline{SS}$ line goes low, and the D27 anode also goes low. At the same time, Q24 turns off, and CSS goes high to notify the microprocessor of the start of reception. In CW mode, Q23 turns on and C57 and C58 are connected in parallel.

Since there is a 15ms time constant circuit consisting of R103, R104, C58, and C57 for the output of pin 2 of IC15 (inverter), the output of pin 4 of IC15 goes low 15ms after $\overline{SS}$. So CTXB goes low 15ms after the key is up, and TXB also rises with the same timing.

When TXB goes low, Q154 of the TRX module turns off, Q155 and Q151 turn on, and RXB goes high.

- **CKY down**

During full break-in, Q21 and Q22 turn on the 12ms delay circuit consisting of R99 and C56, and the signal whose key- down is 12ms behind is input to pin 1 of IC10. This signal rectifies the waveform of the signal that is delayed 15ms.

- **RBC generation**

RBC is generated in the same way as in manual standby. RBC goes low 12ms after RXB goes high by key-up. The receiver operates only when RBC is low.

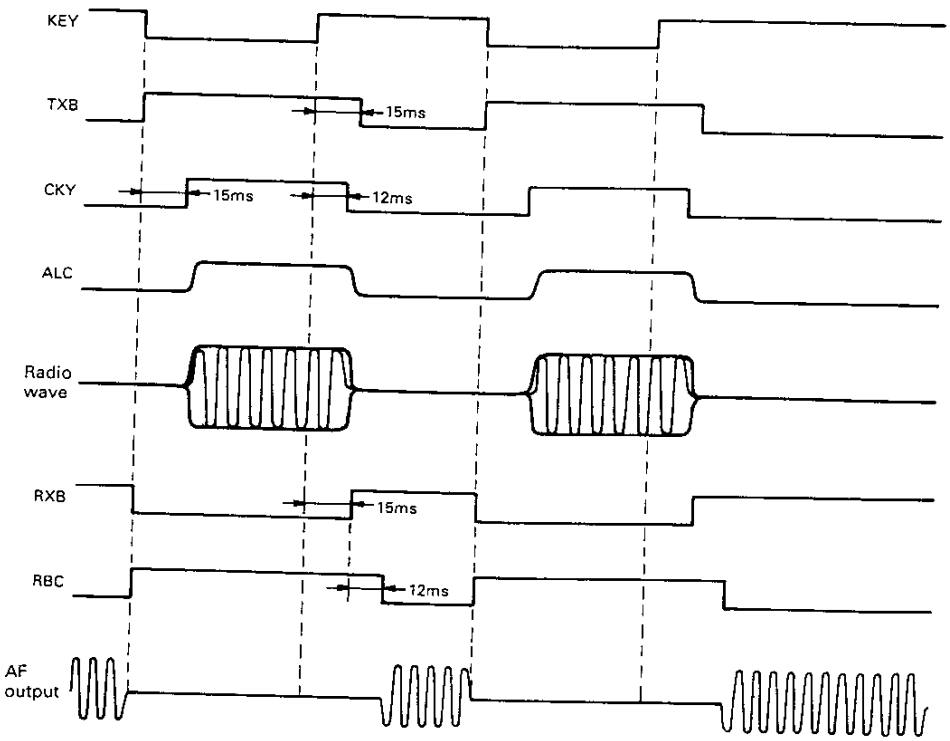

Fig. 19 Full break-in timing chart

CIRCUIT DESCRIPTION

3. Timing for semi-break-in operation

- **Generation of TXB by key down**

When the key is down, the $\overline{SS}$ line goes high in the same way as for full break-in.

During semi-break-in operation, pin 5 of IC16 (analog switch) goes high and pins 4 and 3 conduct. Q24 turns on through D34, pins 4 and 3 of IC16, and D31 from the $\overline{SS}$ line, and CSS is grounded to notify the microprocessor of the start of transmission.

TXB is generated from CTXB through D27 from $\overline{SS}$.

- **CKY and transmission hold circuit**

The KYB signal produced by key-down triggers the A input, pin 12, of IC9 (one-shot multi), and the Q output, pin 10, is high for a certain period.

Since pin 5 of IC16 (analog switch) is high, pins 4 and 3 conduct. Q24 turns on through D34, pins 4 and 3 of IC16, and D33 from the Q output, and CSS is grounded. CSS is held low for the time determined by the time constant of the one-shot multi or the time constant for semi-break-in.

The KYB signal, having passed through D20, enters pin 11 of IC13 (inverter), passes through pin 8 of IC13 and D24, and enters pin 1 of IC1 14 (NAND gate).

SS of pin 1 of IC10 (NAND gate) goes high through D33 and pins 4 and 3 of IC16 while the Q output from pin 10 of IC9 is high. SS is held high while IC9 is triggered by the keying signal.

So pin 2 of IC10 (NAND gate) is high. After $\overline{Q}$ goes high 15ms after $\overline{SS}$ is triggered for the first time, the A input of IC9 (one-shot multi) goes high unless $\overline{SS}$ changes. Pin 1 of IC10 goes high, and pin 10 of IC11 (inverter) and pin 2 of IC14 (NAND gate) go high.

For the output of pin 3 of IC14, the signal keyed by KYB is output from pin 2 of IC12 (analog switch) and becomes the CKY signal. When the hold time of IC9 (one-shot multi) elapses after key-up, the Q pin goes low, and $\overline{SS}$ goes low, returning to reception.

4. VOX operation

When IC9 (one-shot multi) is triggered by the output from the VOX module (X59-1080-01) of the AF unit (X49-3050-00), the Q output goes high and is fed to the control unit (X53-3380-00) by harness. Q25 turns on through pins 8 and 9 of IC16 (analog switch) from the VOXQ pin of connector CN20 of the control unit, and the SS line is grounded. Subsequent operations are the same as for manual standby.

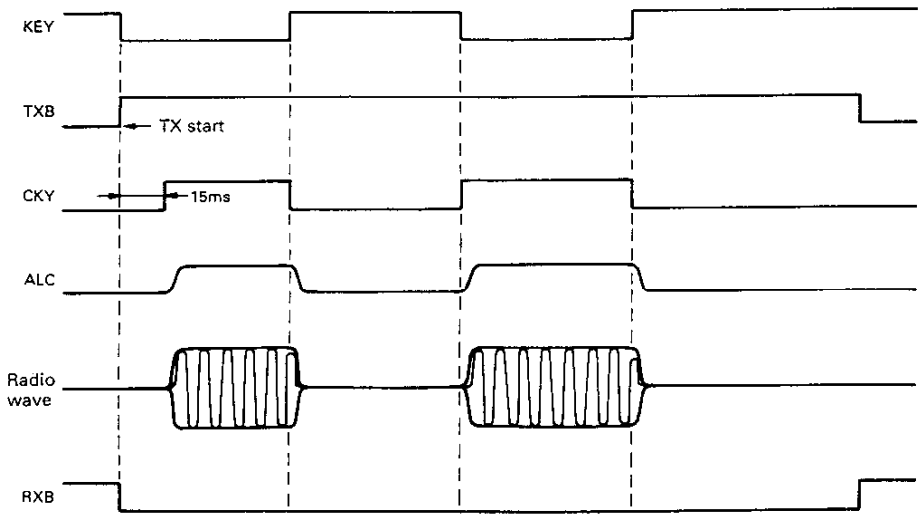

Fig. 21 Semi-break-in timing chart

CIRCUIT DESCRIPTION

Voice Memory Operation

If the optional DRU-2 is installed, the voice memory can be used.

1. Logic for VOA and VOB

	Recording (microphone signal)	Recording (receive signal)	Monitor (Reception)	Transmission
VOA	L	L	H	H
VOB	H	L	L	H

During recording (microphone signal)
Signals from the microphone are sent to the VI terminal of the DRU-2, and are written into the memory of the DRU-2.

During recording (receive signal)
Main audio signals are sent to the VO terminal of the DRU-2 from the MANO terminal through IC101 (a/4), and are written into the memory of the DRU-2.

During monitoring (reception)
Signals from the DRU-2 are output from the VO terminal, sent to the monitor VR from the MONVR1 terminal through IC101 (b/4), and are monitored.

During transmission
Signals from the DRU-2 are output from VI and sent to the microphone amplifier.

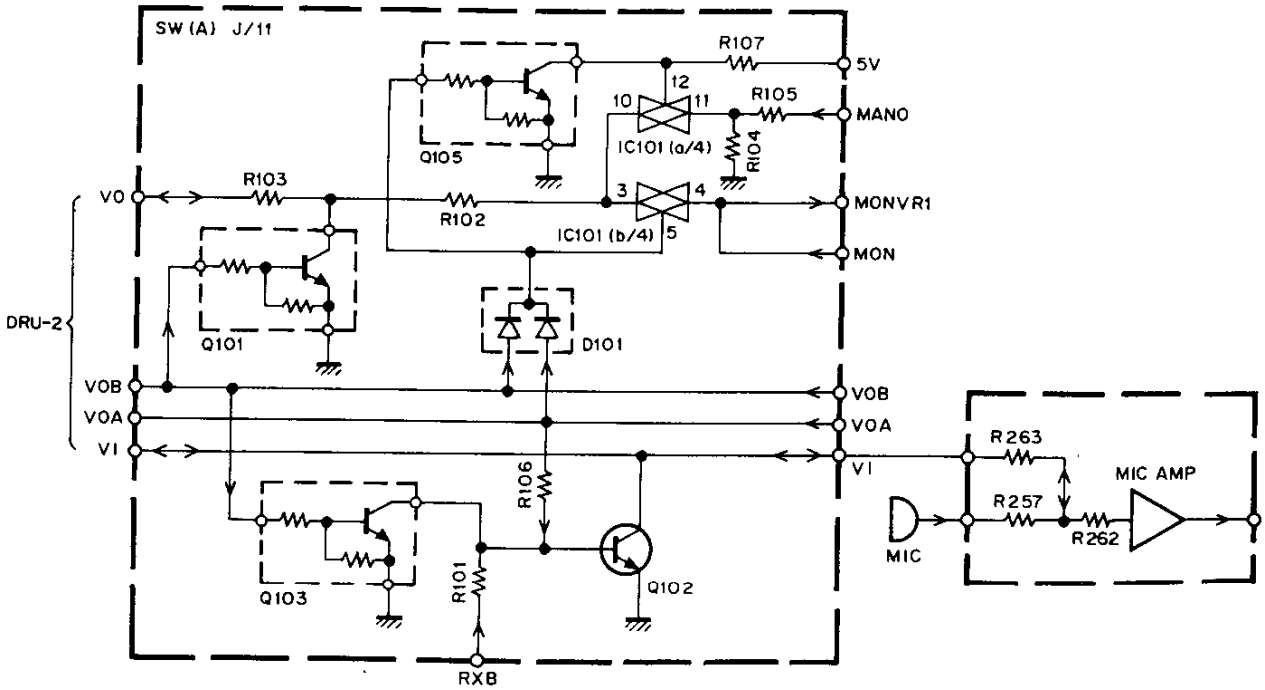

Fig. 22 Voice memory operation

CIRCUIT DESCRIPTION

Final Unit

There are three major differences between the TS-950SDX and the TS-950S/SD :

1. The final stage has been changed from transistor (MRF429MP) to FET (MRF150MP).
2. The bias circuit has been modified for the FET.
3. The fan always runs during transmission as in the TS-850 and TS-450/690.

Some constants have been modified to improve the frequency characteristics.

The power MOS FET has a higher gain than the bipolar transistor, so the overall gain of the final unit is made equal to that of the TS-950S/SD by increasing the negative feedback with R19 and R20. Since the MOS FET has a very high input impedance between its source gates, the impedance is reduced by R17 and R18. If the frequency is high, the impedance is reduced by R15 and R16 to prevent oscillation. L5 uses a teflon coaxial cable to make the primary and secondary connections constant and improve efficiency.

The bias circuit is described next. The power MOS FET : MRF150 used in the TS-950SDX shows variations in mutual conductance, Gfs, and gate threshold voltage, VGS(th). The MRF150MP has a pair of FETs with equal Gfs. The MRF150MP has different VGS(th), so each of the FETs needs a bias circuit, which are isolated by C42 to C47.

The bias voltage is produced by D3 and D11, and the bias voltage for each FET is adjusted by VR4 and VR5. Q18 and Q19 supply the bias voltage to each FET, which is not screwed to the radiator because it does not require a large current, unlike the bipolar transistors.

D11 to D13 are for temperature compensation. Since the power MOS FETs have negative temperature characteristics, they do not need temperature compensation because they do not cause thermal crash, unlike the bipolar transistors. However, since there is a bipolar transistor in the bias circuit, the gate bias voltage rises and the idling current increases when the temperature is high. D11 to D13 are provided to prevent this.

DSP Unit

1. Functions

The DSP unit performs digital signal processing, modulates signals in the SSB, CW, AM, and FSK modes, generates the carrier for frequency modulation, performs PSN detection and AF filtering, and generates two tones for adjustment.

2. Features

The sampling frequency of the TS-950SDX has been changed from 49.189kHz to 44.39024kHz for modulation and 44.4kHz for detection. The IF has been changed accordingly and 11.09756kHz is converted to 455kHz during modulation from the previous D/A first image of 36.891kHz. It is 100kHz during detection to make use of the TS-950SDX frequency configuration.

This increases the number instructions that can be executed in one sampling period, improving performance.

- **Modulation**

Twelfth-degree PSN SSB modulation, CW waveform rectification with a Gaussian response ROM filter, and FSK waveform rectification with a Gaussian response FIR filter are performed by improving the performance of the DSP-10/100. Better sideband suppression is obtained by changing the PSN degree from 10 to 12.

- **Detection**

Good sideband suppression and sound quality are produced by the PSN detection method. The PSN degree for detection is 10, while that for modulation is 12. The AF filter is a FIR filter to reduce noise and provide good characteristics. You can select filters for SSB, CW, and FSK by changing 18 characteristics. The signal-to-noise (S/N) ratio is improved by suppressing noise and interference in the low-frequency range between audio formats during SSB reception and SSB/CW with a linear phase comb filter. (On/off is selected from a menu in SSB.)

CIRCUIT DESCRIPTION

3. Configuration

Figure 23 is a block diagram of the DSP. The DSP consists of the digital unit, which controls and performs digital signal processing; the analog unit, which processes analog signals and outputs them to the digital unit, and converts input from the digital unit to analog signals; and the PLL unit, which generates clock pulses to manage the frequencies with the main unit, and performs digital signal processing with an accurate sampling frequency.

4. Flow of signals

The flow of signals in each of the modes is described below.

- **Modulation**

1) Flow of signals to modulation in SSB/AM mode

MIC signal (DSP3 : MAO)
↓
21dB normal-phase amplifier — IC5
↓
High-pass filter for sound quality adjustment (bandwidth limit) — IC3,4,5,6
↓
High-pass filter through on/off (AAF input changeover circuit) A/D converter transmission/reception on/off — IC7
↓
Limiting amplifier for limiting the input amplitude to the analog-to-digital converter — IC8,9
↓
Fifth-order low-pass filter for removing the loopback part (AAF) — IC8
↓
Rectification to staircase waveform by the sample and hold amplifier to input to the analog-to-digital converter (Gain: 6dB) — IC10,11,Q1
↓
Digitize signals using a 44.39024kHz sampling frequency with the analog-to-digital converter, and feed serial signals to the gate array. — IC12,14,15
↓
Read data from the internal register of the gate array and carry out SSB/amplitude modulation (digital signal processing). — IC21,22,23

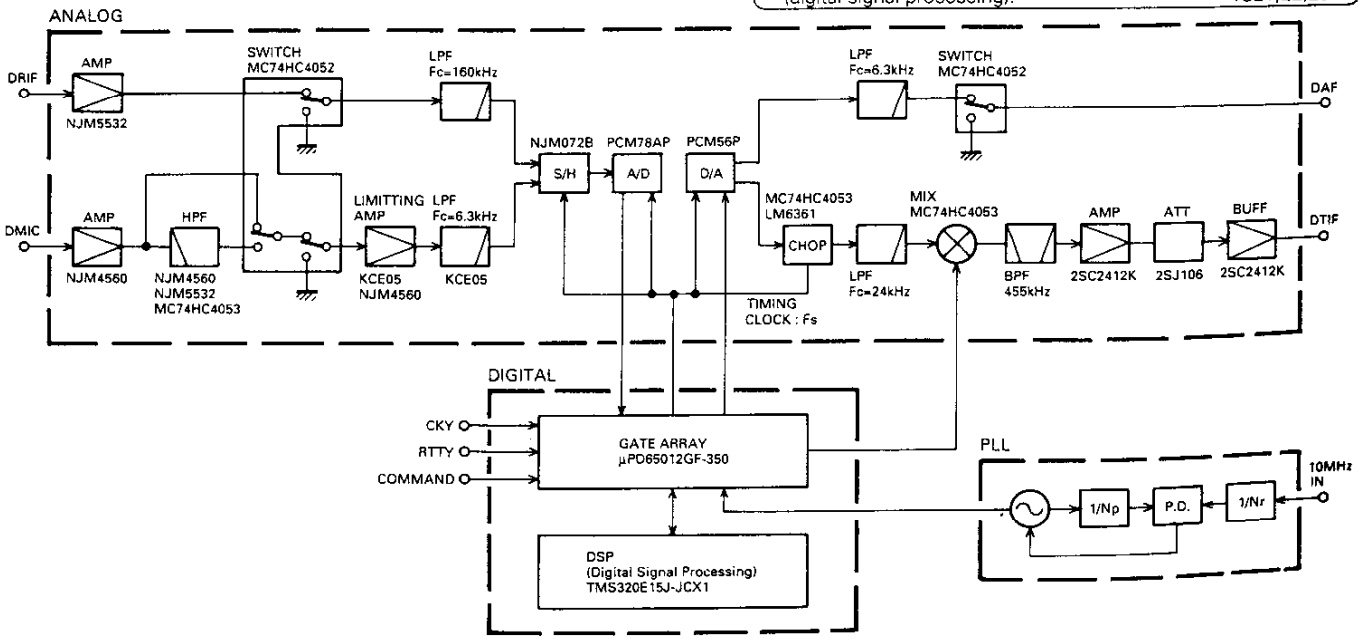

Fig. 23 DSP unit block diagram

CIRCUIT DESCRIPTION

2) Flow of signals to modulation in CW mode

Key-in data from CKEY (DSP3)
Protect the input with D3, then connect to gate array key.

↓

Read data from the gate array during each sampling period, and carry out CW modulation (digital signal processing). IC21,22,23

3) Flow of signals to modulation in FSK mode

Shift data from RTK (DSP3)
Reverse and convert the level with Q7.

↓

Read data from the gate array during each sampling period, and carry out CW modulation (digital signal processing). IC21,22,23

4) Flow of signals after D/A output in each modulation mode

Improve the frequency characteristics of the digital-to-analog converter output with a chopper. IC16,17,18

↓

Extract 11.09756kHz with a low-pass filter.

↓

Mix it with 443.9024kHz to produce a 455kHz signal. IC20,Q2

↓

Remove unnecessary adjacent components with a ceramic filter.

↓

IF amplifier Q3

↓

Output level control ATT. Q4

↓

Output the signal from the buffer to DTIF. Q5

• Flow of Signals for Detection

IF signal (DRIF)

↓

30dB normal-input amplifier IC6

↓

On/off to MIC IC7

↓

Third-order low-pass filter that removes IF harmonics

↓

Rectification to staircase waveform by the sample and hold amplifier to input to the analog-to-digital converter (Gain : 4dB) IC10,11,Q1

↓

Digitize signals with a 44.4kHz sampling frequency with the analog-to-digital converter and feed serial signals to the gate array. IC12,14,15

↓

Detection (digital signal processing) IC21,22,23

↓

Audio output from the digital-to-analog converter IC16,17,18

↓

Ham suppression and output level adjustment by differential amplifier (−10 dB) IC19

↓

Low-pass filter that removes harmonics (SMF) IC9

↓

DAF output on/off IC20

↓

Output from DAF

5. Description of units

• PLL unit

The PLL circuit provides the reference for each clock used by the DSP unit. The 10MHz reference frequency is input.

The reference signal amplified by Q9 is compared with the VCO signal divided by PLL IC IC26, and the PLL is locked to 35.51219MHz during modulation and 35.5MHz during detection.

• Digital unit

The digital unit consists of digital signal processor DSP : TMS320E15 and peripheral circuits.

CIRCUIT DESCRIPTION

1) DSP

The high-speed processor for digital signal processing generates 25MHz signals for internal clocks and operates on 6.25MHz (160nsec) clocks (1/4 the clock frequency). The DSP executes most instructions, such as 16-bit + 16-bit addition and 16-bit x 16 bit = 32 bit multiplication, in one machine cycle.

It contains a 4-Kword EPROM and 256-word RAM.

It interfaces with the A/D and D/A converters, receives commands from the main unit, and read switches through the gate array connected to the bus.

2) Gate array

The single-chip gate array generates internal and external clocks from the internal reference signal from the PLL, interfaces with the analog unit, generates the DSP reset signal, receives commands to the DSP from the main unit, and inputs RTK, CKY, and TXB. It makes the digital unit circuit smaller and improves reliability.

3) Other peripheral circuits of the DSP

IC23 provides timing for writing data to the gate array.

IC24 is a power supply voltage detection IC that outputs a low signal to the gate array when the power supply voltage drops. When the power is switched on, the output from this IC is delayed by the gate array and sent to the DSP. Since the clock from the PLL is used for delaying, a reset is output to the DSP if the clock is not input or if the level is insufficient.

Q8 is an amplifier that amplifies the DSP reference signal to the gate array input level.

Q6 converts the TXB level. The TXB whose level is converted is supplied to the analog unit about 14ms when reception is switched to transmission.

• Analog unit

The analog unit interfaces between analog and digital signal processing via the audio A/D and D/A converters.

1) High-pass filter

The high-pass filter for modulation processing is not a digital filter, but an analog one because of the processing capability of the DSP, and uses the same characteristics for modulation and detection. The cut-off frequency (–3 dB) can be obtained by the following Butterworth Filter.

$$Fc = 1/2 \cdot \pi \sqrt{Ra \cdot Rb \cdot Ca \cdot Cb} \qquad (Ca = Cb)$$

The high-pass filter allows the cut-off frequency to be changed in four steps by switching the resistance with the analog switch. The high-pass filter setting is determined by the overall cut-off characteristics of the notch filter and high-pass filter during SSB modulation. When the notch filter is off, or during AM modulation or detection, the cut-off of the high-pass filter is used. Table 7 lists high-pass filter positions and cut-off frequencies.

HPF position	MH0	MH1	HPF cut-off
100Hz	1	1	55Hz
200Hz	0	1	135Hz
300Hz	1	0	300Hz
400Hz	0	0	400Hz

Table 7 High-pass filter cut-off frequencies

2) Limiting amplifier

If a signal with an amplitude larger than the input amplitude enters the A/D converter, very large distortion occurs. To prevent this, the amplitude is clipped by a limiting amplifier to limit the amplitude so that the input level for the A/D converter does not exceed the full scale for the A/D input.

The operational amplifier in the HIC is used as the limiting amplifier. If the amplitude exceeds about ±1.6V, it is clipped by IC9.

CIRCUIT DESCRIPTION

3) AAF and SMF

If the sample-and-hold amplifier input has a component of 1/2 the sampling frequency fs (Nyquist band), it causes loopback distortion that cannot be removed by a filter. The low-pass filter that removes the components outside the Nyquist band is called an anti-ailiasing filter (AAF).

This filter has roughing 6.3kHz cut-off frequency to prevent undesirable effects on the amplitude and group delay characteristics of the 3kHz transmission band. It is an active filter having five-degree simultaneous Chebyshev characteristics as the minimum characteristics to remove the components outside the Nyquist band.

The harmonics in the audio output are reduced by a smoothing filter (SMF). It is the same HIC as the AAF.

The HIC circuit uses a low-noise, low-distortion FDNR filter designed for audio equipment.

4) Limit cycle suppression signal

The MF10 signal from the gate array is divided by IC13, the level is reduced, and goes to the A/D converter to suppress the zero input limit cycle generated from the low-pass filter during SSB modulation. This signal is off if the DSP notch filter is through.

Since this signal is set to the attenuation limit of the notch filter, it does not leak to the modulation output.

5) S/H amplifier and A/D converter

Since the A/D converter converts signals serially, the input level must be constant during conversion. Before the A/D converter converts, the sample-and-hold (S/H) amplifier samples the input signal and outputs a stepwise signal.

The 100kHz signal is input during detection, but the 11.1kHz output spectrum appears at the basic level due to the sampling theorem, as if the 11.1kHz IF were input.

If the SH signal from the gate array is high, Q1 turns on, and sampling is performed as an amplifier with a gain of zero. If the signal is low, Q1 turns off, and the sampled value is held. Output resistors for IC10/1 and IC16/1 are provided to protect the operational amplifier. D2 shifts the SH level from 0/5 to –5/0.

6) D/A converter circuit

The 16-bit serial digital signal from the digital unit is converted to an analog signal by the D/A converter. The output is converted by the chopper circuit with a 50% duty in modulation mode. The D/A converter output is transmitted as it is during AF-SLOPE. The frequency characteristics are improved by taking the output with a 50% duty during modulation processing due to the aperture effect. This operation is the same as the operation of the audio deglicther.

7) D/A low-pass filter (for modulation)

Since the low-pass filter for detection has a low cut-off frequency, a 24kHz low-pass filter is used for modulation. It has broad characteristics, and the output contains many harmonics, but they are removed by a ceramic filter.

CIRCUIT DESCRIPTION

8) Mixer

Multiplication is performed by turning the analog switch on and off at 443.9024kHz to convert to 455kHz with addition to 11.09756kHz.

9) Band-pass filter (455kHz)/amplifier

Undesired components of the converted 455kHz signal (D/A output components not removed by the low-pass filter; image and harmonics in the mixer) are removed by the 455 ± 5kHz ceramic filter.

10) A/D converter input switching

Analog switch IC8 switches the MIC input to the AAF, and turns the RIF input H on and off.

Signal		Input to AAF	Input to RIF A/D
NTX	MH2		
0	0	HPF	OFF
0	1	HPF through	OFF
1	X	OFF	ON

Table 8 IC8

11) DAF output on/off

6. Frequency relationship

- **During modulation**

  $f_{DSPSTD} = (728/205) \times 10 \times 10^6$

  $f_{MIX} = f_{DSPSTD}/80$, $f_s = f_{DSPSTD}/800$

  $f_{455} = f_{MIX} + 1/4 \cdot f_s = 41/3200 \cdot f_{DSPSTD}$

- **During detection**

  $f_{DSPSTD} = (128/36) \times 10 \times 10^6$

  $f_s = f_{DSPSTD}/800$

  $f_{100} = 9/4 \cdot f_s = 9/3200 \cdot f_{DSPSTD}$

7. Digital signal processing specifications

HPF	Phase shifter design band	Side-band suppression
Through	38.2Hz~4584Hz	70dB
100Hz	45Hz~4500Hz	75dB
200Hz	67Hz~6700Hz	75dB
300Hz	140Hz~8400Hz	80dB
400Hz	140Hz~8400Hz	80dB

Table 9 Modulation phase shifter design band

Filter	Phase shifter design band	Side-band suppression
BPF LPF : 600~2400Hz	60Hz~3435Hz	70dB
LPF : 2600~6000Hz	75Hz~4296Hz	70dB

Table 10 Detection phase shifter design band

Digital Control Unit

The TS-950DX digital control circuit has a multiple chip configuration centered around IC8 : µPD 78C10AGQ, and consists of a 64K ROM (IC19 : M27C512B), an 8K RAM (IC18 : LC3564PML), and an I/O port (IC3, IC6, IC7 : MB89363B). This circuit controls about 150 different input and output signals.

CIRCUIT DESCRIPTION

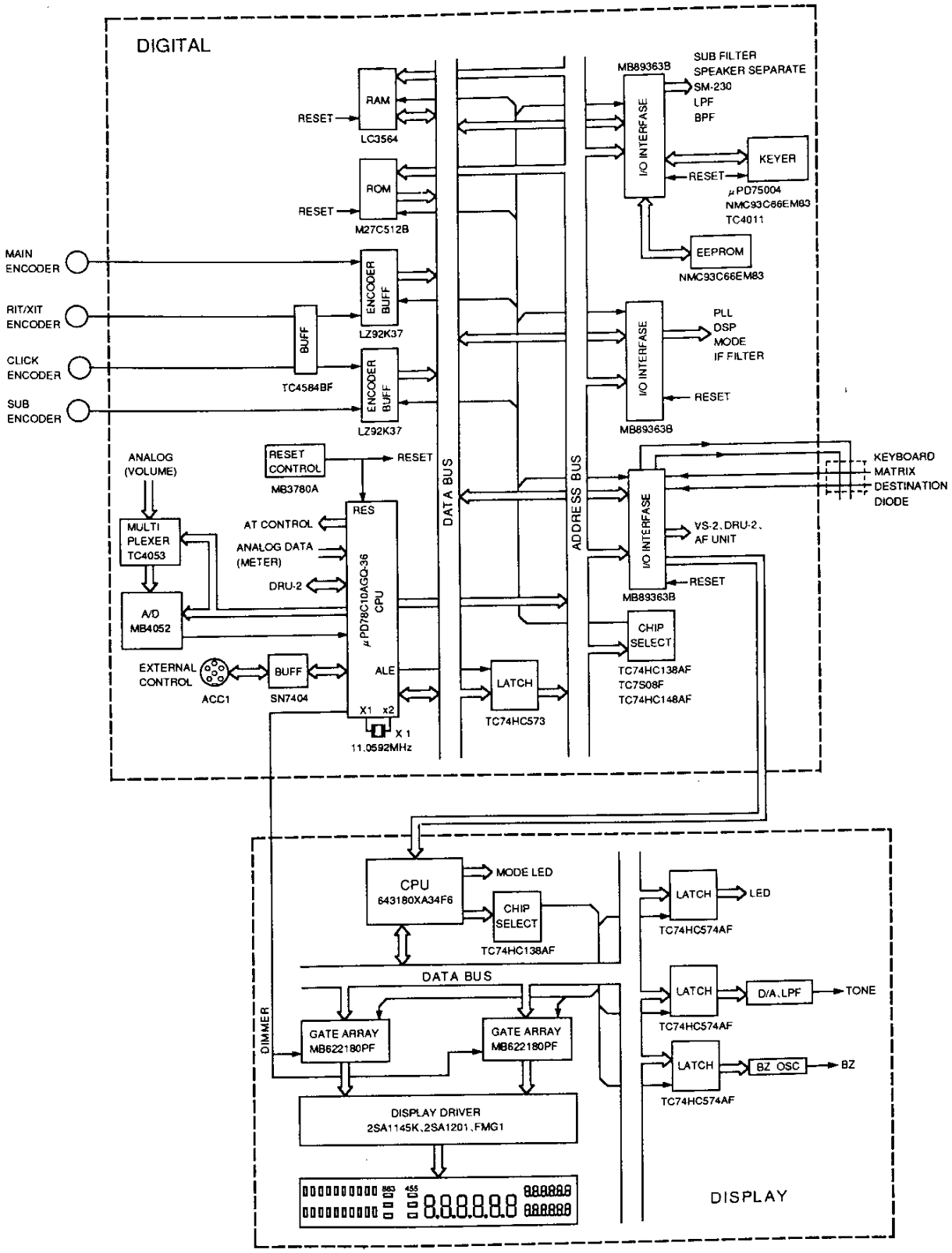

Fig. 24 Digital control block diagram

CIRCUIT DESCRIPTION

1. Encoder circuit

The main encoder and sub-encoder are magnetic rotary encoders, and the click and RIT/XIT encoders are contact-type rotary encoders.

Encoder pulses enter the gate array (LZ92K371), and are read through the CPU bus. The gate array is selected by CSIO4 or CSIO5, and the CK1, CK2, or CK3, CK4 encoder is selected by A0.

Encoder data is output to D0 to D7 by making RD active when the chip select signal is active. IC22 rectifies the waveforms of the click and RIT/XIT encoder pulses.

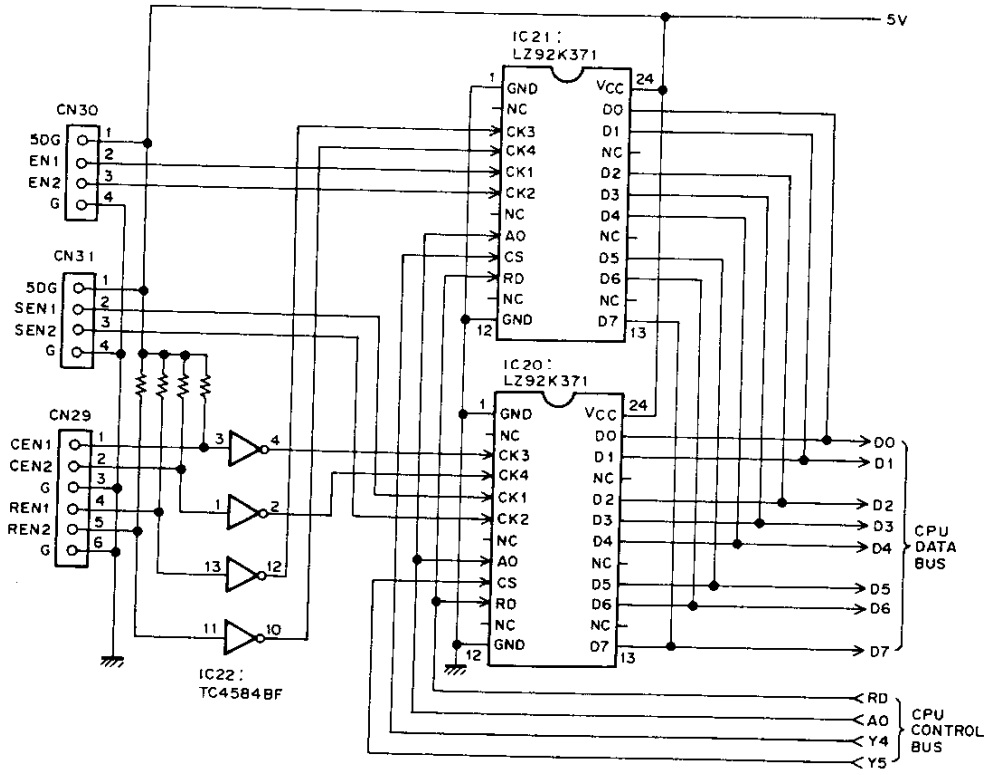

Fig. 25 Encoder circuit

2. System reset and RAM backup

The power monitor IC (IC17 : MB3780A) monitors the power supply voltage. If the voltage is low, the IC outputs a RESET signal to the CPU and I/O to stop operation and back up the RAM with a lithium battery.

When the power supply voltage becomes normal (including power on), the reset is canceled, the CPU and I/O are initialized after the time constant set by C258 and C259, and operation resumes. Power is supplied to the RAM from the outlet.

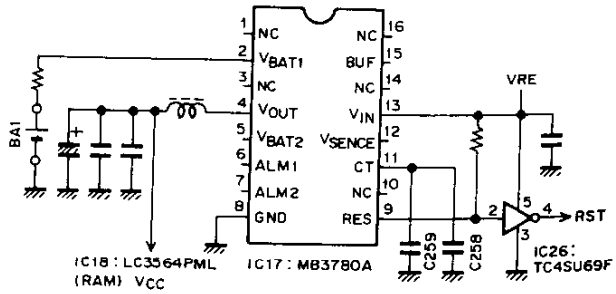

Fig. 26 System reset and RAM backup

CIRCUIT DESCRIPTION

3. Address control

Since PD0 to PD7 of the main CPU carry multiplexed address and data signals, the address signal is separated from the data signal by latching the address signal using the ALE signal from IC12 : TC74HC573AF. PF0 to PF7 represent the high-order byte of the address.

The address signals of A9 to A15 are used as chip select signals for each IC by address decoder IC14 and IC16 : TC74HC138AF and IC15 : TC74HC148AF.

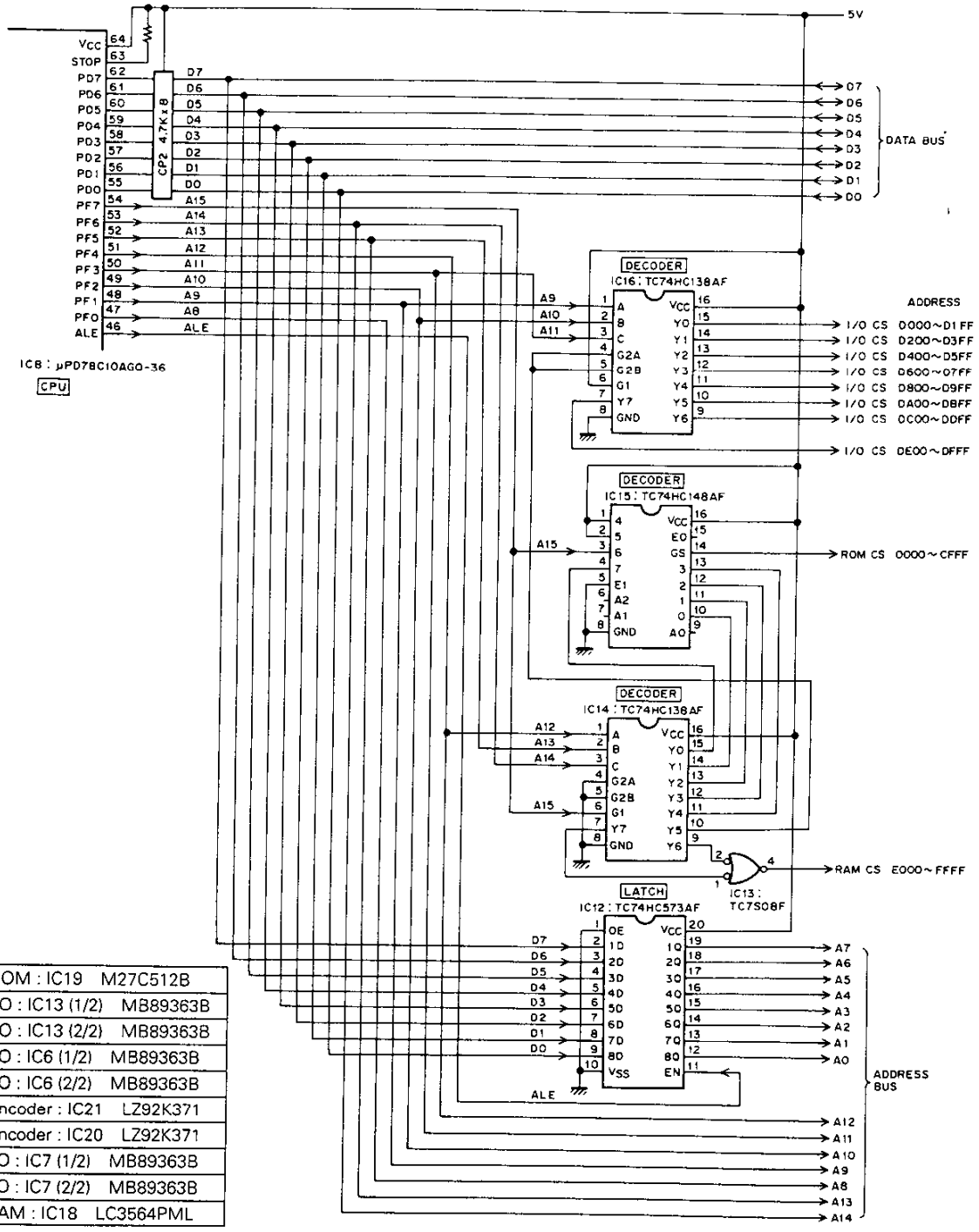

0000	ROM : IC19 M27C512B
D000	I/O : IC13 (1/2) MB89363B
D200	I/O : IC13 (2/2) MB89363B
D400	I/O : IC6 (1/2) MB89363B
D600	I/O : IC6 (2/2) MB89363B
D800	Encoder : IC21 LZ92K371
DA00	Encoder : IC20 LZ92K371
DC00	I/O : IC7 (1/2) MB89363B
DE00	I/O : IC7 (2/2) MB89363B
E000	RAM : IC18 LC3564PML
FFFF	

Fig. 28 Memory map

Fig. 27 Address control circuit

CIRCUIT DESCRIPTION

4. Analog signal input

The main CPU incorporates an 8-channel analog-to-digital (A/D) converter, and also has IC10 : MB4056 (A/D) and IC11 (analog switch) for entering 13-channel analog signals. Incoming analog signals are digitized and handled digitally.

IC8 : µPD78C10AGQ (CPU)

Port name	Signal name	Description
AN0	RWM	Reflected wave voltage
AN1	AGC	AGC meter voltage
AN2	MET3	ALC/Ic volume voltage (switched by ALMS)
AN3	–	Not used
AN4	MET1	S/RF meter voltage (switched by TXB)
AN5	–	Not used
AN6	PRM	Processor meter voltage
AN7	SBMET	Sub S-meter voltage

IC10 : MB4052 (A/D converter)

Port name	Signal name	Description
A0	RMC	RM-1 (external keyboard) voltage
A1	POD1	AT variable capacitor 1 voltage
	POD2	AT variable capacitor 2 voltage
A2	PIT	PITCH volume voltage
	VBT	VBT volume voltage
A3	SLL	Slope tune low-cut volume voltage
	SLH	Slope tine high-cut volume voltage

IC11 : TC4053 switches between A1, A2 and A3.

Table 11 Analog signal input

5. Display

Since the TS-950SDX uses a combined fluorescent display tube and meter, a new sub-CPU for the display drive has been developed. The sub-CPU is located on the display unit, and is controlled by serial commands from the main CPU.

The load on the main CPU can be decreased by making the main CPU send display data and control data to the sub-CPU as serial commands, since the sub-CPU lights the fluorescent display tube dynamically.

The sub-CPU lights the fluorescent display tube dynamically according to the command data from the main CPU. Since there are 24 grids, including the meter and sub reception frequency, and the display scan speed is not sufficient, the grids are divided and scanned at high speed to avoid flickering. The sub-CPU not only drives the display, but also performs other processing, such as repeater subtone synthesis, beep tone generation, and LED display. The power required to light the display is supplied from the AVR unit.

The dimmer functions by varying the lighting duty of the gate array output. A display-enable signal is output from the LH pin (CN5 pin 3) of the display unit each time one segment is displayed. This signal changes the duty continuously with the timer/event counter of the main CPU, and changes the brightness by the gate array.

CIRCUIT DESCRIPTION

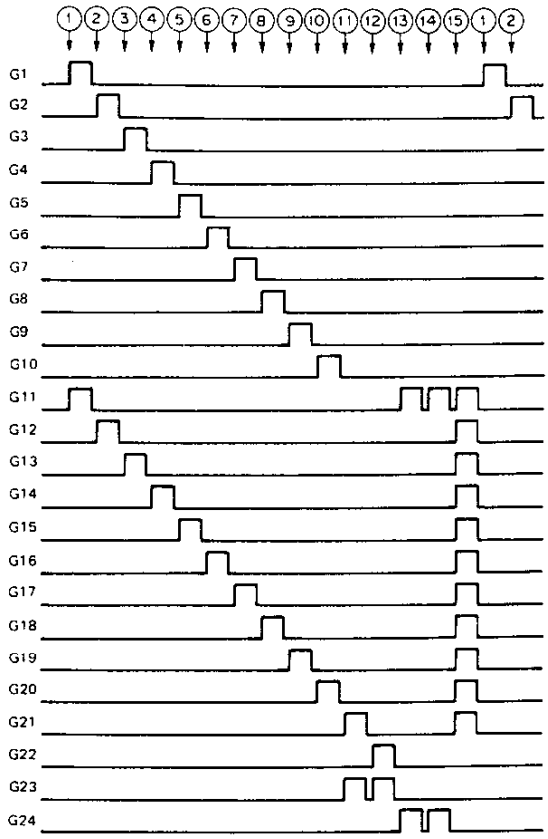

(1)	G1	: TX VFO 10Hz,	SUB VFO 10Hz	G11 : RIT 10Hzg
(2)	G2	: TX VFO 100Hz,	SUB VFO 100Hz	G12 : RIT 100Hz
(3)	G3	: TX VFO 1kHz,	SUB VFO 1kHz	G13 : RIT 1kHz
(4)	G4	: TX VFO 10kHz,	SUB VFO 10kHz	G14 : "kHz" display
(5)	G5	: TX VFO 100kHz,	SUB VFO 100kHz	G15 : MAIN VFO 10Hz
(6)	G6	: TX VFO 1MHz,	SUB VFO 1MHz	G16 : MAIN VFO 100Hz
(7)	G7	: TX VFO 10MHz,	SUB VFO 10MHz	G17 : MAIN VFO 1kHz
(8)	G8	: A, B, M function		G18 : MAIN VFO 10kHz
(9)	G9	: Units digit in Mch		G19 : MAIN VFO 100kHz
(10)	G10	: Tens digit in Mch		G20 : MAIN VFO 1MHz
(11)	G23	: Upper meter		G21 : MAIN VFO 10MHz
(12)	G23	: Upper meter		G22 : Filter select
(13)	G24	: Lower meter		One of G11 to G21 (Analog scale red pointer)
(14)	G24	: Lower meter		One of G11 to G21 (Analog scale red pointer)
(15)		No display		All G11 to G21 (Analog scale)
(1)		Repeat from (1)		

In (11) to (14), the meters (upper and lower) and analog scale red pointer light twice to increase the intensity.
There is a blanking time (whole display off) when the display is switched during each scan. The lighting period is approximately 520 μs (Display illuminated: approximately 470 μs; blanking: approximately 50 μs).

Fig. 29 Timing chart for display lighting (grid only)

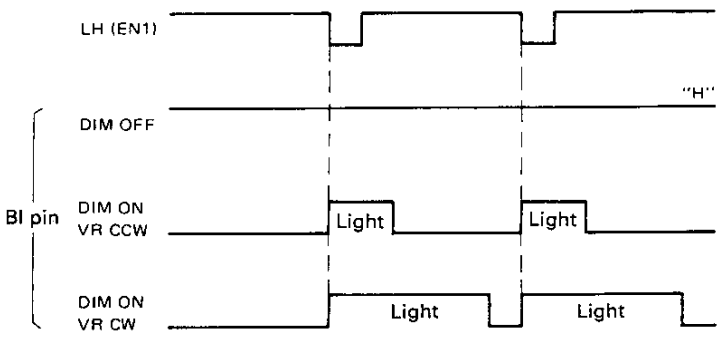

CIRCUIT DESCRIPTION

6. PLL and DDS data

The TS-950SDX has 8 + 1 PLLs (one for the DSP) and 2 DDSs. The CPU sends data to the PLLs and DDSs according to the displayed frequency. The PLL ICs provide unlock data signals. If one of the PLLs should unlock, the display indicates fact.

Loop			VCO No.	IC	Ref. frequency/ Ref. division ratio	Variable division ratio	VCO oscillator frequency	Input terminal	Unlock signal
MAIN	LO1	High-order	VCO1	AF unit (X49-3050-00) IC11 : CXD1225M	500k/20	76–136	73.06–103.05MHz	FMI (11 pin)	A0 (8 pin) "H" : Unlock
		Low-order	DDS1	PLL unit (X50-3170-00) IC3 : F71022	–	–	950–450kHz	–	–
	LO2	2nd local oscillator	VCO0	AF unit (X49-3050-00) IC13 : CXD1225M	FM mode : 5k/2000 Other than FM mode : 20k/500	FM mode : 12844 Other than FM mode : 3211	Fixed at 64.22MHz	FMI (11 pin)	A0 (8 pin) "H" : Unlock
	LO3	3rd local oscillator	VCO6	CAR unit (X50-3180-00) IC3 : CXD7925B	2k/5000	Center 81250	Approx. 162.5MHz	FMI (11 pin)	A0 (8 pin) "H" : Unlock
	LO4	4th local	VCO5	CAR unit (X50-3180-00) IC1 : CXD7925B	2k/5000	Center 17750	Approx. 35.5MHz	FMI (11 pin)	A0 (8 pin) "H" : Unlock
	CAR		VCO9	CAR unit (X50-3180-00) IC9 : CXD7925B	2k/5000	Center 5000	Approx. 10.0MHz	FMI (11 pin)	A0 (8 pin) "H" : Unlock
			VCO4	CAR unit (X50-3180-00) IC6 : CXD7925B	2k/5000	Center 34750	Approx. 69.5MHz	FMI (11 pin)	A0 (8 pin) "H" : Unlock
SUB	LO	High-order	VCO7	PLL unit (X50-3170-00) IC11 : CXD1225M	500k/20	6~68	40.065–70.055MHz	AMI (13 pin)	A0 (8 pin) "H" : Unlock
		Low-order	DDS2	PLL unit (X50-3170-00) IC4 : F71022	–	–	790.076~1290.76kHz	–	–
	CAR	MAIN CAR shared	VCO4 shared	CAR unit (X50-3180-00) IC6 : CXD7925B	2k/5000	Center 34750	Approx. 69.5MHz	FMI (11 pin)	A0 (8 pin) "H" : Unlock
DDS CLOCK			VCO8	PLL unit (X50-3170-00) IC5 : CXD1225M	16k/625	6072	97.152MHz	FMI (11 pin)	A0 (8 pin) "H" : Unlock

Table 12 PLL and DDS data

CIRCUIT DESCRIPTION

7. Key scan

The P0* and P1* ports of IC7 form a keyboard matrix. A key scan signal (a negative pulse) is output from the P1* port. One column corresponding to the P0* port is selected, and the state of the corresponding switch is read. When the switch at the intersection of the matrix is pressed, the P0* port bit goes low. Thus, which switch is pressed can be detected. Keys are debounced by software.

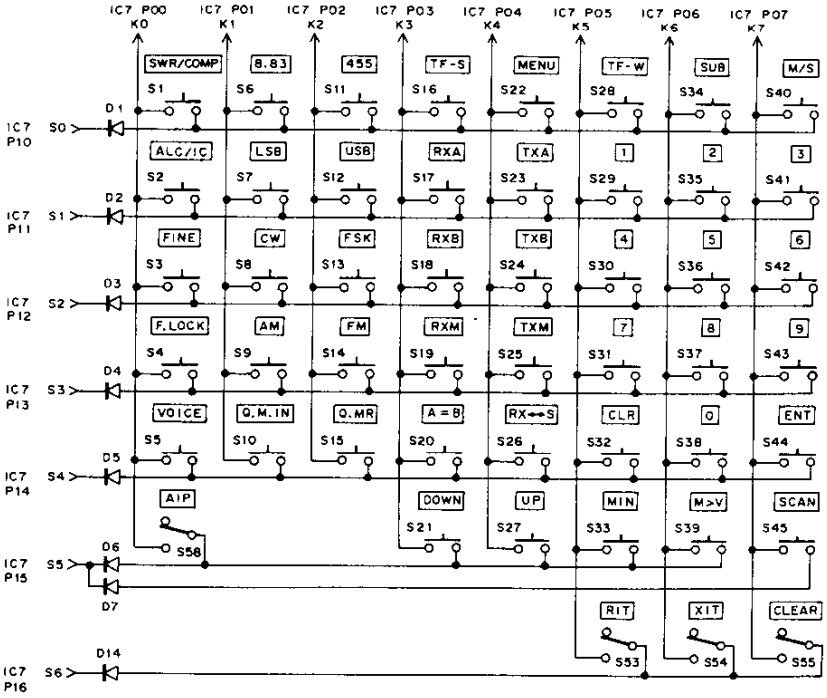

Fig. 31 Key matrix

8. Bandscope signal

Station monitor SM-230 can be connected to the TS-950SDX. The sub reception frequency can be displayed as an intensity marker point on the SM-230 tube by the simultaneous two-wave reception function of the main unit.

The digital unit outputs the difference between the main operation frequency and sub operation frequency to the SM-230. The TS-950SDX receives bandscope scan width data from the SM-230, and outputs the sub reception frequency point at the position specified by the sweep width when the center of the tube is the main receive frequency. It then displays it by the intensity marker on the SM-230.

The resolution for each scan width is divided and sent by 100 digits to the right and 100 digits to the left from the center of the tube (a total of 200 digits).

±25kHz : 50kHz/200 = 250 Hz resolution

The main CPU controls the main frequency and sub reception frequency, calculates the direction of the sub reception frequency to the main frequency (right or left from the center of the tube) and the difference frequency between them. This is processed by the D/A converter, buffered, and output as a digital value according to the range and resolution. It is output to the SCOPE pin.

SMKC is the on/off signal for sub reception. This signal turns the intensity marker on and off so that there is no unnecessary intensity point when the sub receiver stops. The output is grounded by the open collector when the sub receiver is turned on.

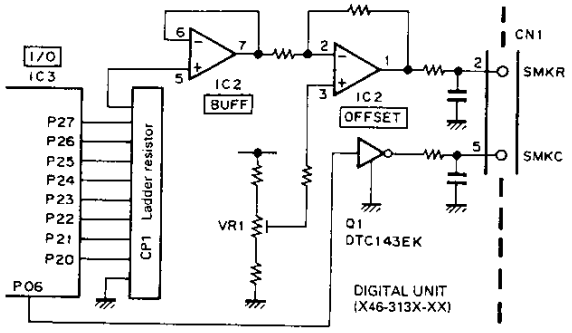

Fig. 32 Bandscope signal

CIRCUIT DESCRIPTION

9. Electronic keyer

The electronic keyer is controlled by transferring 8-bit commands serially. The commands include automatic electronic keyer correction, automatic correction reversal, bug key mode setting, manual weight setting, and recording/playback setting.

The electronic keyer has a variable weight function. The dot : dash : space ratio for the normal CW code is fixed at 1 : 3 : 1, but it can be changed.

When auto-weight is off, the ratio of dash to dot can be set by setting the manual weight. By default, dot : dash : space is 1 : 3 : 1, so the same code as for the normal electronic keyer can be output.

When auto-weight is set to on, the ratio of dash to dot interlocked with the KEY SPEED VR can be set automatically. As the keying speed increases, the speed can be varied so that dash is lengthened or shortened. It is turned on and off with the REV switch.

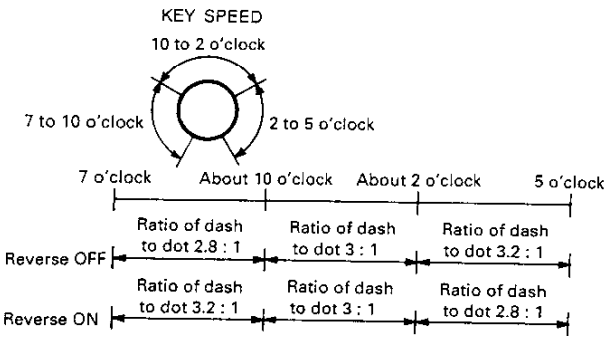

Fig. 33

10. AT control

The AT is controlled by the variable capacitor position data (POD1, POD2, analog data input), motor normal/reverse rotation control (PR11, PR12, PR21, PR22), motor speed control (SPED), motor control switching (APRE), progressive wave for SWR calculation, and reflected wave voltage (VSFM, VSRM analog data input).

SPED switches the motor rotation on and off during AT tune and presetting by PWM using a duty cycle related to the SWR value.

APRE changes the motor normal/reverse rotation control to analog control for AT tune, and to digital control for presetting.

PR performs motor normal/reverse rotation control and stop control when motor normal/reverse control is performed digitally.

11. IF filter switching
(455kHz : Signal unit, 8.83MHz : IF unit)

The IF filter switching signal from the digital unit is sent to the signal unit as 10-bit serial data. The serial-to-parallel converter (TC9174F) in the signal unit converts the serial data to parallel data to select the 8.83MHz or 455kHz IF filter.

12. PLL VCO data

The AF, PLL unit switches VCOs according to the VCO band data (MVBA to MVBD: main; SVBA to SVBD: sub) from the digital unit.

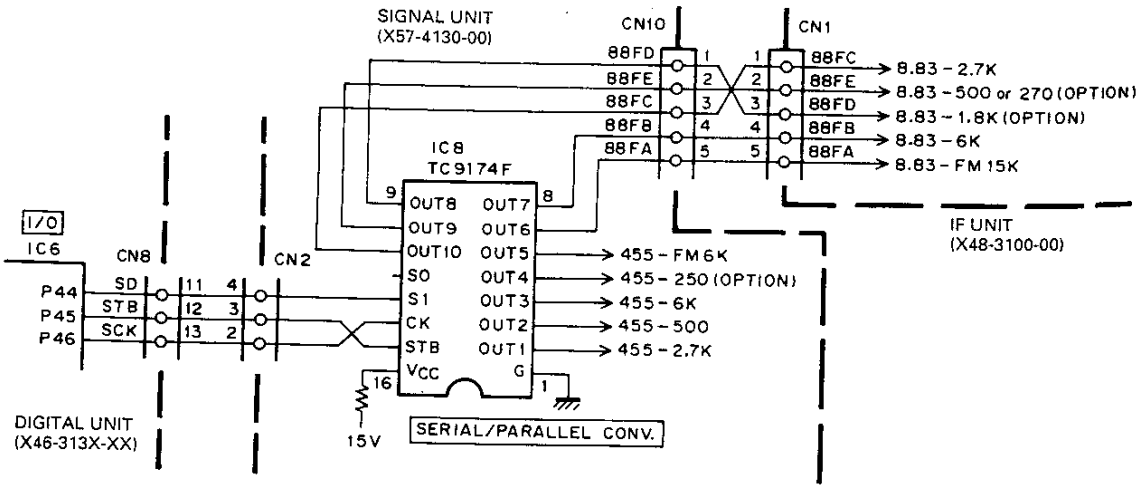

Fig. 34 IF filter switching

CIRCUIT DESCRIPTION

13. Receive band-pass filter selection

The RF band-pass filter signal (RB0 to RB3) from the digital unit is buffered by Q2 and Q3 of the digital unit, then sent to the RF unit. The RF unit obtains RF band-pass filter data using BCD-to-decimal decoders.

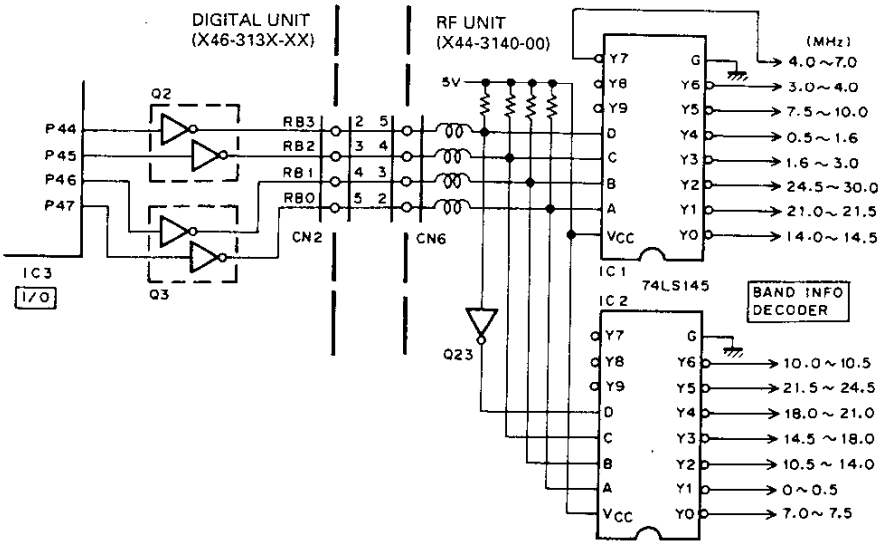

Fig. 35 Receive band-pass filter selection

14. Transmit low-pass filter, AT band data

Transmitter system band data (LP0 to LP3) from the digital unit is buffered by Q5 and Q6 of the digital unit, then sent to the filter unit. The filter unit obtains TX low-pass filter data and AT band data using BCD-to-decimal decoders.

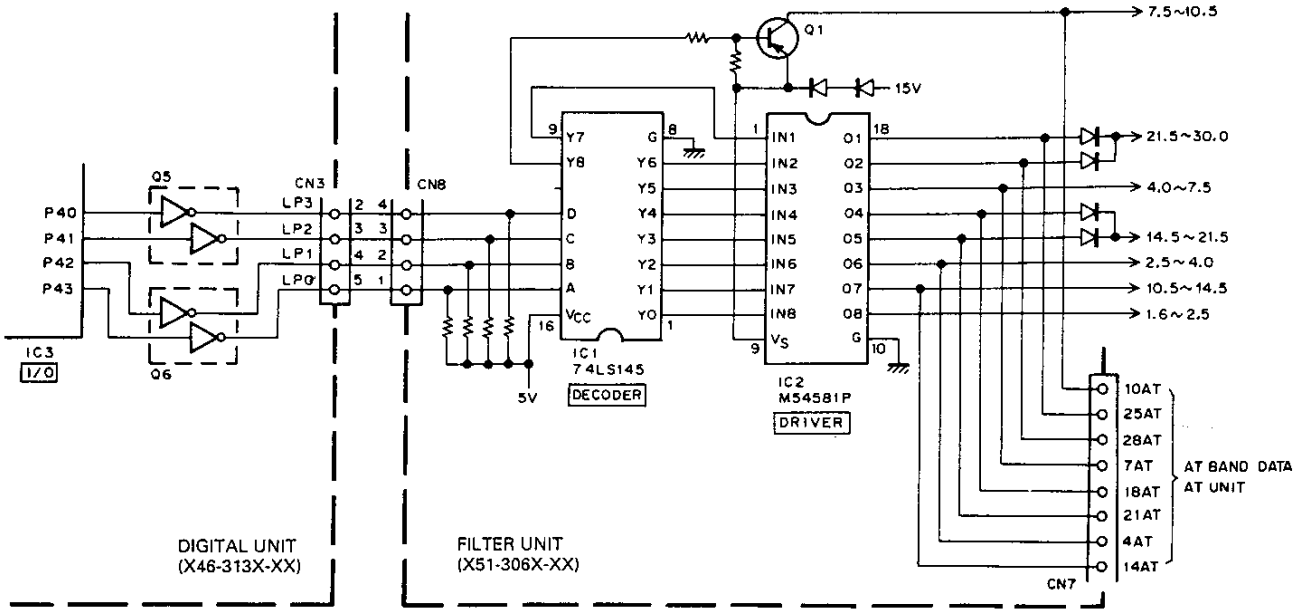

Fig. 36 Transmit low-pass filter, AT band data

CIRCUIT DESCRIPTION

15. Band data list (Note : VB, RB, and LP are the logic signals on the output pins of the I/O port)

Frequency	VCO0	VB VCO-BRB				RB RX BPF				LP LPF			
(MHz)	N	VBD	VBC	VBB	VBA	RB3	RB2	RB1	RB0	LP3	LP2	LP1	LP0
0.010000~ 0.489999	76	0	0	0	1	0	1	1	0	1	1	1	1
0.490000~ 0.989999	77	0	0	0	1	1	0	1	1	1	1	1	1
0.990000~ 1.489999	78	0	0	0	1	1	0	1	1	1	1	1	1
*1 1.490000~ 1.620000	79	0	0	0	1	1	0	1	1	1	1	1	1
*2 1.620001~ 1.980000	79	0	0	0	1	1	1	0	0	1	1	1	1
1.990000~ 2.489999	80	0	0	0	1	1	1	0	0	1	1	0	1
2.490000~ 2.989999	81	0	0	0	1	1	1	0	0	1	1	0	1
2.990000~ 3.489999	82	0	0	0	1	1	0	0	1	1	1	0	1
3.490000~ 3.989999	83	0	0	0	1	1	0	0	1	1	1	0	1
3.990000~ 4.489999	84	0	0	0	1	1	0	0	0	1	0	1	0
4.490000~ 4.989999	85	0	0	0	1	1	0	0	0	1	0	1	0
4.990000~ 5.489999	86	0	0	0	1	1	0	0	0	1	0	1	0
5.490000~ 5.989000	87	0	0	0	1	1	0	0	0	1	0	1	0
5.990000~ 6.489999	88	0	0	0	1	1	0	0	0	1	0	1	0
6.490000~ 6.989000	89	0	0	0	1	1	0	0	0	1	0	1	0
6.990000~ 7.489999	90	0	0	0	1	0	1	1	1	1	0	1	0
7.490000~ 7.989999	91	0	0	1	0	1	0	1	0	0	1	1	1
7.990000~ 8.489999	92	0	0	1	0	1	0	1	0	0	1	1	1
8.490000~ 8.989999	93	0	0	1	0	1	0	1	0	0	1	1	1
8.990000~ 9.489999	94	0	0	1	0	1	0	1	0	0	1	1	1
9.490000~ 9.989999	95	0	0	1	0	1	0	1	0	0	1	1	1
9.990000~10.489999	96	0	0	1	0	0	0	0	1	0	1	1	1
10.490000~10.989999	97	0	0	1	0	0	1	0	1	1	1	1	0
10.990000~11.489999	98	0	0	1	0	0	1	0	1	1	1	1	0
11.490000~11.989999	99	0	0	1	0	0	1	0	1	1	1	1	0
11.990000~12.489999	100	0	0	1	0	0	1	0	1	1	1	1	0
12.490000~12.989999	101	0	0	1	0	0	1	0	1	1	1	1	0
12.990000~13.489999	102	0	0	1	0	0	1	0	1	1	1	1	0
13.490000~13.989999	103	0	0	1	0	0	1	0	1	1	1	1	0
13.990000~14.489999	104	0	0	1	0	1	1	1	1	1	1	1	0
14.490000~14.989999	105	0	1	0	0	0	1	0	0	1	0	1	1
14.990000~15.489999	106	0	1	0	0	0	1	0	0	1	0	1	1
15.990000~15.989999	107	0	1	0	0	0	1	0	0	1	0	1	1
15.990000~16.489999	108	0	1	0	0	0	1	0	0	1	0	1	1
16.490000~16.989999	109	0	1	0	0	0	1	0	0	1	0	1	1
16.990000~17.489999	110	0	1	0	0	0	1	0	0	1	0	1	1
17.490000~17.989999	111	0	1	0	0	0	1	0	0	1	0	1	1
17.990000~18.489999	112	0	1	0	0	0	0	1	1	1	0	1	1
18.490000~18.989999	113	0	1	0	0	0	0	1	1	1	1	0	0
18.990000~19.489999	114	0	1	0	0	0	0	1	1	1	1	0	0
19.490000~19.989999	115	0	1	0	0	0	0	1	1	1	1	0	0
19.990000~20.489999	116	0	1	0	0	0	0	1	1	1	1	0	0
20.490000~20.989999	117	0	1	0	0	0	0	1	1	1	1	0	0
20.990000~21.489999	118	0	1	0	0	1	1	1	0	1	1	0	0
21.490000~21.989999	119	1	0	0	0	0	0	1	0	1	0	0	0
21.990000~22.489999	120	1	0	0	0	0	0	1	0	1	0	0	0
22.490000~22.989999	121	1	0	0	0	0	0	1	0	1	0	0	0
22.990000~23.489999	122	1	0	0	0	0	0	1	0	1	0	0	0
23.490000~23.989999	123	1	0	0	0	0	0	1	0	1	0	0	0
23.990000~24.489999	124	1	0	0	0	0	0	1	0	1	0	0	0
24.490000~24.989999	125	1	0	0	0	1	1	0	1	1	0	0	0
24.990000~25.489999	126	1	0	0	0	1	1	0	1	1	0	0	1
25.490000~25.989999	127	1	0	0	0	1	1	0	1	1	0	0	1
25.990000~26.489999	128	1	0	0	0	1	1	0	1	1	0	0	1
26.490000~26.989999	129	1	0	0	0	1	1	0	1	1	0	0	1
26.990000~27.489999	130	1	0	0	0	1	1	0	1	1	0	0	1
27.490000~27.989999	131	1	0	0	0	1	1	0	1	1	0	0	1
27.990000~28.489999	132	1	0	0	0	1	1	0	1	1	0	0	1
28.490000~28.989999	133	1	0	0	0	1	1	0	1	1	0	0	1
28.990000~29.489999	134	1	0	0	0	1	1	0	1	1	0	0	1
29.490000~29.989999	135	1	0	0	0	1	1	0	1	1	0	0	1
29.990000~30.000000	136	1	0	0	0	1	1	0	1	1	0	0	1

K type *1 : 1.490000~1.705000, *2 : 1.705001~1.989999

(LP LPF select frequency *.490000, *.990000 : *.500000, *.000000)

CIRCUIT DESCRIPTION

16. Functions of IC pins

- **CPU : μPD78C10AGQ-36 (IC8)**

Port name	Pin No.	Name	Function	I/O	Remarks
PA0, PA1	1, 2	D1, D2	DRU-2 data line	I/O	
PA2	3	D4	DRU-2 data line	I/O	
PA3	4	D8	DRU-2 data line	I/O	
PA4~PA6	5~7	SELA~SELC	TC4053 channel selection	O	
PA7	8	DATAIN	MB4052 data input	I	
PB0	9	ADCLK	MB4052 data clock	O	
PB1	10	ADCS	MB4052 chip select	O	
PB2	11	SPED	Internal AT motor speed control	O	"H" : Motor on
PB3	12	APRE	Motor control analog/digital switching	O	"L" : Digital, "H" : Analog
PB4, PB5	13, 14	PR22, PR21	Motor 2 rotation direction control	O	
PB6, PB7	15, 16	PR12, PR11	Motor 1 rotation direction control	O	
PC0	17	TXD	Personal computer interface transmit data	O	
PC1	18	RXD	Personal computer interface receive data	I	
PC2	19	CTS	Personal computer interface transmit enable data	I	
PC3	20	RTS	Personal computer interface receive enable data	O	
PC4	21	ADC0	MB4052 channel selection	O	
PC5	22	LH	Display enable signal	I	
PC6	23	BI	Dimmer PWM signal	O	
PC7	24	ADC1	MB4052 channel selection	O	
AN0	34	RWM	Reflected wave voltage	I	A/D input
AN1	35	AGC	AGC volume voltage	I	A/D input
AN2	36	MET3	ALC/Ic meter voltage	I	A/D input
AN3	37		Not used	I	A/D input
AN4	38	MET1	S/RF meter voltage	I	A/D input
AN5	39		Not used	I	A/D input
AN6	40	PRM	Processor meter voltage	I	A/D input
AN7	41	SBMET	Sub S-meter voltage	I	A/D input
PD0~PD7	52~62	AD0~AD7	CPU address/data multiplexed bus	I/O	
PF0~PF7	47~54	A8~A15	CPU high-order address bus	O	
RD	44	RD	Read signal	O	"L" : Acknowledge
WR	45	WR	Write signal	O	"L" : Acknowledge
ALE	46	ALE	Address/data separation signal	O	
NMI	25	NMI	Normal couple interrupt	I	Always "H"
INT1	26	INT1	External interrupt	I	Always "L"
M1, M0	27, 29	M1, M0	External memory mode	I	Always "H"
AVcc	43	AVcc	Power supply for A/D converter	I	
AVref	42	AVref	Reference power supply for A/D converter	I	
AVss	33	AVss	Ground for A/D converter		
X1, X2	30, 31	X1, X2	CPU clock crystal pin	I	
RES	28	RES	CPU reset pin	I	"L" : Reset
STOP	63	STOP	CPU stop pin	I	Always "H"

CIRCUIT DESCRIPTION

- **Extended I/O : MB89363B (IC3)**

Port name	Pin No.	Name	Function	I/O	Remarks
P00	28	ELKDA	Electronic keyer serial data	O	
P01	27	ELKCK	Electronic keyer serial clock	O	
P02	26	ELKSW	Electronic keyer switch	O	
P03	25	EERMCK	EEPROM serial clock	O	
P04	23	EERMDA	EEPROM serial data output	O	
P05	22	EERMCS	EEPROM chip select	O	
P06	21	SMKC	SM-230 sub-marker control	O	
P07	20	HIPC	AIP signal	O	
P10	44	ELKBSY	Electronic keyer busy signal	I	
P11	45	ELKMEA	Electronic keyer playback/recording busy signal	I	
P12, P13	46, 47	PG0, PG1	SM-230 span signal	I	
P14	48	EERMDI	EEPROM serial data input	I	
P15	49	TXB	Transmission B	I	
P16	50	VOX	VOX switch	I	
P17	51	FULL	FULL/SEMI switch	I	
P20~P22	38~40	SMKR0~SMKR2	SM-230 sub-marker D/A output	O	
P23	43	SMKR3	SM-230 sub-marker D/A output	O	
P24~P27	37~34	SMKR4~SMKR7	SM-230 sub-marker D/A output	O	
P30	77	ESS	Transmit request signal	O	
P31	78	DSPB	DSP B signal	O	
P32	79	LAIP	AIP LED	O	
P33	80	LAT	AT LED	O	
P34	1	LSUB	SUB LED	O	
P35	2	SB50	Sub IF filter 500Hz	O	
P36	3	SB27	Sub IF filter 2.7kHz	O	
P37	4	SBTH	Sub IF filter through	O	
P40~P43	61~58	LP3~LP0	Transmit LPF selection	O	
P44~P47	57~54	RB3~RB0	Receive BPF selection	O	
P50~P53	67~62	SEP0~SEP3	Speaker mix selection	O	
P54	68	AGO	AGC off selection	O	
P55	69	AGM	AGC medium selection	O	
P56	70	AGS	AGC slow selection	O	
P57	71		Not used	O	
DB0~DB7	12~19	DB0~DB7	Data bus	I/O	
RD	76	RD	Read signal	I	"L" : Acknowledge
WR	5	WR	Write signal	I	"L" : Acknowledge
RES	6	RES	Reset signal	I	"L" : Reset
A0, A1	31, 32	A0, A1	Port select signal	I	
CS0	29	CS0	Chip select signal	I	"L" : P0X to P2X selected
CS1	75	CS1	Chip select signal	I	"L" : P3X to P5X selected

CIRCUIT DESCRIPTION

- **Extended I/O : MB89363B (IC6)**

Port name	Pin No.	Name	Function	I/O	Remarks
P00	28	MDA	DSP serial data	O	
P01	27	MCK	DSP serial clock	O	
P02	26	MEN	DSP serial enable	O	
P03	25	MLE	DSP serial enable	O	PLL
P04~P06	23~21		Not used	O	
P07	20	ALMS		O	
P10, P11	44, 45	PLE7, PLE6	PLL7, PLL6 enable	O	
P12	46	PLE8	PLL8 enable	O	
P13	47	PLE5	PLL5 enable	O	
P14	48	DLE1	DDS1 enable	O	
P15	49	PLE9	PLL9 enable	O	
P16	50	DLE2	DDS2 enable	O	
P17	51	PLE4	PLL 4 eanble	O	
P20	38	PCK	PLL serial clock	O	
P21	39	PDA	PLL serial data	O	
P22, P23	40, 43		Not used	O	
P24	37	ATA	AT auto/through switch	I	
P25	36	ATS	AT start switch	I	
P26	35	PROC	Processor switch	I	
P27	34	CSS	SS line	I	
P30~P33	77~80	SVBA~SVBD	Sub VCO selection	O	
P34~P36	1~3	MH0~MH2	DSP filter selection	O	
P37	4	MATT	DSP attenuator selection	O	
P40	61	CWC	CW mode signal	O	
P41	60	AMC	AM mode signal	O	
P42	59	FSKC	FSK mode signal	O	
P43	58	DATAC	DATA mode signal	O	
P44	57	FLDA	IF filter selection (TC9174) serial data	O	
P45	56	FLEN	IF filter selection (TC9174) enable	O	
P46	55	FLCK	IF filter selection (TC9174) serial clock	O	
P47	54	TXI	Transmit disable signal	O	
P50, P51	67, 66	UL2, UL3	Unlock signal	I	
P52	65	MOS	MONI switch	I	
P53	62	DSPC	DSP installation signal	I	
P54	68	FMC	FM mode signal	O	
P55	69	SSBC	SSB mode signal	O	
P56	70	CARS	500kHz marker signal	O	
P57	71	LSBC	LSB mode signal	O	
DB0~DB7	12~19	DB0~DB7	Data bus	I/O	
RD	76	RD	Read signal	I	"L" : Acknowledge
WR	5	WR	Write signal	I	"L" : Acknowledge
RES	6	RES	Reset signal	I	"L" : Reset
A0, A1	31, 32	A0, A1	Port select signal	I	
CS0	29	CS0	Chip select signal	I	"L" : P0X to P2X selected
CS1	75	CS1	Chip select signal	I	"L" : P3X to P5X selected

CIRCUIT DESCRIPTION

- **Extended I/O : MB89363B (IC7)**

Port name	Pin No.	Name	Function	I/O	Remarks
P00~P07	28~20	K0~K7	Key matrix input	I	
P10~P17	44~51	S0~S7	Key matrix output	O	
P20	38	DSCK	Sub CPU serial clock	O	
P21	39	DSDA	Sub CPU serial data	O	
P22	40	DSEN	Sub CPU enable	O	
P23	43		Not used	O	
P24	37	DSBUSY	Sub CPU busy	I	
P25	36	MU	MIC up switch	I	
P26	35	MD	MIC down switch	I	
P27	34		Not used	I	
P30	77	VSCK	VS-2 serial clock	O	
P31	78	VSDA	VS-2 serial data	O	
P32	79	VSSTR	VS-2 synthesis start signal	O	
P33	80		Not used	O	
P34	1	WR	DRU-2 command write control	O	
P35	2	RD	DRU-2 command read control	O	
P36	3	VOA	DRU-2 voice input/output switching	O	
P37	4	VOB	DRU-2 voice input/output switching	O	
P40	61	PLE1	PLL1 enable	O	
P41	60	PLE0	PLL0 enable	O	
P42	59	MVBC	Main VCO switching	O	
P43	58	MVBD	Main VCO switching	O	
P44	57	MVBB	Main VCO switching	O	
P45	56	MVBA	Main VCO switching	O	
P46, P47	55, 54		Not used	O	
P50	67	VCK	DRU-2 installation signal	I	
P51	66	VSBSY	VS-2 busy	I	
P52	65	UL1	Unlock input	I	
P53	62	DIMS	DIM switch	I	
P54	68	MRBK	Main RF blanking	O	
P55	69	SRBK	Sub RF blanking	O	
P56	70	MABK	Main AF blanking	O	
P57	71	SABK	Sub AF blanking	O	
DB0~DB7	12~19	DB0~DB7	Data bus	I/O	
RD	76	RD	Read signal	I	"L" : Acknowledge
WR	5	WR	Write signal	I	"L" : Acknowledge
RES	6	RES	Reset signal	I	"L" : Reset
A0, A1	31, 32	A0, A1	Port select signal	I	
CS0	29	CS0	Chip select signal	I	"L" : P0X to P2X selected
CS1	75	CS1	Chip select signal	I	"L" : P3X to P5X selected

CIRCUIT DESCRIPTION

- **Electronic keyer : 75004GB-746-3B4 (IC24)**

Port name	Pin No.	Name	Function	I/O	Remarks
P00	32	DOT	Dot input	I	
P01	31	SCK	Electronic keyer control data clock	I	
P02	30	DLY	Delay switching	I	
P03	29	SI	Electronic keyer control data	I	
P10	37	SP	Serial/parallel input switching	I	"L" : Serial
P11	36	DSH	Dash input	I	
P12	35	SPD	Speed clock input	I	
P13	33	EKS	Electronic keyer select switching	I	"L" : Electronic keyer on
P20	43	KEY	Keyer output	O	"H" : Keyer on
P21	42	RWL	Write LED control	O	
P22	41	MEA	Electronic keyer recording/playback busy	O	"H" : Busy
P23	40	BSY	Electronic keyer data transfer busy	O	"H" : Busy
P30	26	MDI	EEPROM data input	I	
P31	25	MDO	EEPROM data output	O	
P32	24	MSK	EEPROM data clock	O	
P33	23	MCS	EEPROM chip select	O	
P40~P43	16~13	WL0~WL3	Wait LED control	O	
P50~P53	11~8	B0~B3	Parallel data input (Manual wait)	I	Not used during serial control
P60, P61	7, 8	CH0, CH1	Parallel data input (Channel selection)	I	Not used during serial control
P62	5	STA	Parallel data input (Recording/playback start)	I	Not used during serial control
P63	4	RWS	Parallel data input (Command write)	I	Not used during serial control
P70	3	FUL	Parallel data input (Full break-in correction)	I	Not used during serial control
P71	2	BKY	Parallel data input (Bug key mode)	I	Not used during serial control
P72	1	REV	Parallel data input (Wait correction reversal)	I	Not used during serial control
P73	44	AUTO	Parallel data input (Auto wait)	I	Not used during serial control
P80	28	M4K	EEPROM size select input	I	
P81	27	ACT	Wait LED active	I	
XT1, XT2	18, 19	XT1, XT2	Sub clock input	I	
RES	20	RES	Reset input	I	
X1, X2	21, 22	X1, X2	Clock input	I	

CIRCUIT DESCRIPTION

AVR Unit

The AVR unit produces +15V thru the use of a discrete IC; +5V and −12V via 3-pin regulator IC's, and 40B thru the use of a zener diode and transistor.

The +15V circuit is a very similar to the +28V circuit of the TS-940. When the power is switched on, Q2 is turned on via start resistors R3 and R24 and current flows. A voltage is generated at R8 and R9. Error amplifier transistor Q4 is turned on while Q1 is turned on.

The circuit operates as a consitant-voltage circuit with a reference voltage of 7.5V which id produced by zener diode. Diode D2 (negative temperature coefficient) is used to compensate for the temperature (positive temperature coefficient) of this zener diode. A current of up to 5.5A flows through Q2, resulting in a collector loss of approximately 35W. R4 is a resistor that is used for stabilization, and has a current flow of approximately 100mA to stabilize operation even if there is no load.

If the +15V line is shorted, F1 (7.5A quick-blow fuse) blows to protect the circuit.

The +5V is generated from the +15V line by a 3-pin regulator IC.

−40V is produced by two −20V zener diodes, and boosted by Q5. R13 is a protection resistor, and R14 and R23 are resistors for discharging C30 and C34.

When the temperature of the power supply radiator reaches 50°C, thermal switch S2 is turned on, and a fan start voltage of approximately 7V is generated by D4. The fan begins running at a low speed. When the temperature of the transformer rises to 80°C, S1 turns off, and Q3 turns on. The fan voltage then becomes approximately 12V, and the fan rotates at high speed, while a power down signal (approximately 5V) is output (CN5-1, TPT).

DESCRIPTION OF COMPONENTS

SWITCH UNIT (A) (X41-3240-00)

Ref. No.	Use/Function	Operation/Condition/Compatibility
IC101	Analog switch	3-4-5, 10-11-12 : DRU-2 signal select.
Q1	Driver	FM LED. Active "H"
Q2	Driver	AM LED. Active "H"
Q3	Driver	CW LED. Active "H"
Q4	Driver	USB LED. Active "H"
Q5	Driver	LSB LED. Active "H"
Q6	Driver	FSK LED. Active "H"
Q7	Driver	TX-A LED. Active "H"
Q8	Driver	RX-M LED. Active "H"
Q9	Driver	RX-A LED. Active "H"
Q10	Driver	TX-M LED. Active "H"
Q11	Driver	TX-B LED. Active "H"
Q12	Driver	RX-B LED. Active "H"
Q13~15	Driver	Key pad LED. Active "H"
Q17	Buffer	
Q101	Switching	Audio mute.
Q102,103	Switching	MIC audio mute.
Q104	Switching	STBY.
Q105	Switching	Audio input select.
Q106	Switching	ALC.
D1~7	Reverse current prevention	
D8	LED (Yellow)	AIP. Active "L"
D9	LED (Yellow)	SUB. Active "H"
D10	LED (Orange)	AT TUNE. Active "H"
D11	LED (Red)	ON AIR. Active "H"
D12	Reverse current prevention	For protection D8.
D13	Reference voltage	10V.
D14	Reverse current prevention	
D101	Switching	VOA/VOB.

AVR UNIT (X43-3070-01)

Ref. No.	Use/Function	Operation/Condition/Compatibility
IC1	+5V AVR	+5V voltage supply for digital unit.
IC2	+5V AVR	+5V voltage supply for PLL unit.
IC3	+5V AVR	+5V voltage supply for DSP unit.
IC4	−12V AVR	−12V voltage supply for each PC board.
Q1	Pre-drive	Drive to Q2 device.
Q2	Series-passed transistor	+15V voltage supply for each PC board.
Q3	Fan motor "HIGH" switch	Fan motor turned to "HIGH" position.
Q4	An error amplifier	Amplified voltage error of the +15V voltage supply.
Q5	−40V AVR	−40V voltage supply for FL tube.
Q101,102	Switching	On when over-voltage.
D1	Voltage rectifier	Base bias for Q1.
D2	Temperature compensation	Cancel to D1 voltage change from temperature changing.
D3	+15V AVR reference voltage	+7.5V.
D4	Fan turned start voltage	Make a voltage when the fan turned on.
D5	Voltage rectifier	−40V.

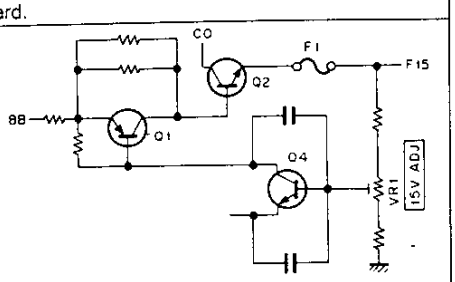

DESCRIPTION OF COMPONENTS

Ref. No.	Use/Function	Operation/Condition/Compatibility
D6	Voltage rectifier	−12V.
D7,8	Occur −40V voltage	−20V x 2
D9	Voltage rectifier	+58V voltage for final unit.
D10	Voltage rectifier	+15V.
D101	Reverse current prevention	
D102	Reference voltage	15V
D103	Protection	On when over-voltage. The fuse will blow when 15V line short.

RF UNIT (X44-3140-00)

Ref. No.	Use/Function	Operation/Condition/Compatibility
IC1,2	Band information decoder	Open collector. Active "L"
Q1~3	RF AGC amplifier	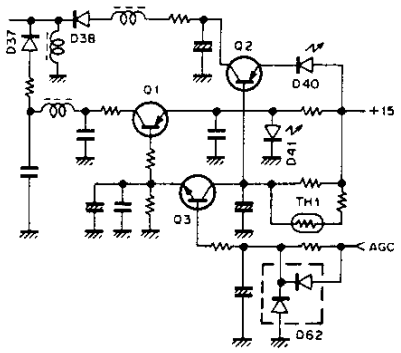
Q4	AIP amplifier	
Q5,6	RF amplifier	
Q7	Buffer	
Q8~11	RX sub 1st mixer	Convert receive frequency into 40.055MHz.
Q12	Buffer	
Q13~16	RX main 1st mixer	Convert receive frequency into 73.05MHz.
Q17	Sub VCO amplifier	
Q18	Main VCO amplifier	
Q19	TX drive amplifier	RF output of RF unit : 10dBm or more.
Q20,21	TX 3rd mixer	Convert 73.05MHz into transmission frequency.
Q22	TX amplifier	
Q23	Switching	When RB3 become "H", output to "L".
Q24	Switching	On in monitor operation.
Q25	Switching	On in AT tune.
Q26~28	Switching	Transmission filter select.
Q29~31	Switching	AIP turned on and off select.
Q32	Switching	On in monitor operation.
Q33~35	Switching	Bias of mixer circuit select.
Q37	Switching	ATT in monitor operation. 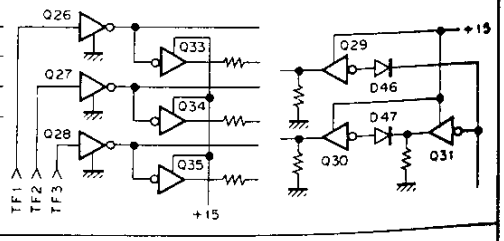
D1,2	Relay surge voltage absorption	D1 : 10dB ATT, D2 : 20dB ATT.
D3	Voltage regulator	Voltage supply of IC1 and IC2 (5V).
D4,5	Lightning surge protection	
D6~35	Switching	RX BPF select.
D36	Switching	Marker circuit switch.
D37,38	AF AGC	AGC circuit pin diode.
D39	Switching	Frequency range 0.5MHz less and more select.
D40	Voltage shift	

DESCRIPTION OF COMPONENTS

Ref. No.	Use/Function	Operation/Condition/Compatibility
D41	Voltage regulator	
D42~45	Switching	AIP turned on and off select.
D46,47	Reverse current prevention	
D48,49	Switching	Monitor turned on and off select.
D50,51	Switching	Main VCO transmission and receive select.
D52~57	Switching	TX BPF select.
D58~60	Reverse current prevention	TX mixer circuit bias.
D61	Reverse current prevention	Decide to gain of the power control or AT tune.
D62	Reverse current prevention	
D63	Lightning surge protection	
D64	Switching	Marker circuit switching.
D65	Temperature compensation	
D66	Switching	RX BPF select.

FINAL UNIT (X45-3450-00)

Ref. No.	Use/Function	Operation/Condition/Compatibility
Q1	Pre-drive amplifier	HF band wide range amplifier.
Q2,3	Drive amplifier	HF band push-pull wide range amplifier.
Q4	Final amplifier	HF band push-pull wide range amplifier.
Q6	Drive bias voltage supply	
Q8~10	AVR	Fianl +48V. 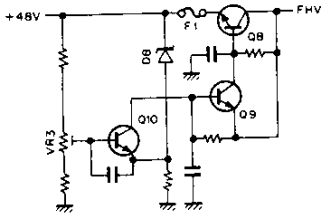
Q11~13	Switching	Fan motor control. (Voltage supply electro-capacitor discharge circuit)
Q14,15	Switching	Transmission stop when irregular voltage of 50V. 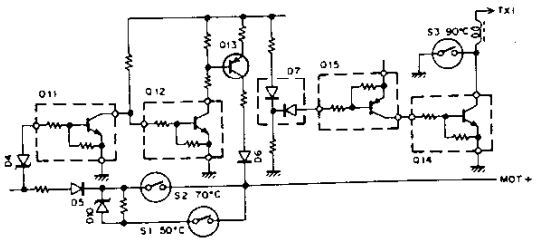
Q16,17	Switching	Fan motor control. (Voltage supply electro-capacitor discharge circuit)
D1	Temperature compensation	Pre-drive temperature detection.
D2	Temperature compensation	Drive temperature detection.
D3	AVR	Gate voltage occur.
D4	15V voltage detection	
D5,6	Reverse current prevention	
D7	Switching	Transmission stop when irregular voltage of 50V.
D8	AVR	50V AVR reference volatge.
D9	Surge absorption	For fan motor.
D10	AVR	Voltage drop protection when S1 switch turned on.
D11	Temperature compensation	Final temperature detection.
D12,13	Temperature compensation	Compensation of Q18, 19.

DESCRIPTION OF COMPONENTS

DIGITAL UNIT (X46-313X-XX) 0-11 : K,P 0-21 : M 0-71 : X 2-71 : E,E3,T 2-72 : E2

Ref. No.	Use/Function	Operation/Condition/Compatibility
IC1	EEPROM	4129 bit, adjustment data memory.
IC2	Operation amplifier	SM-230 sub marker buffer.
IC3	I/O port	8 bit x 3 x 2.
IC4,5	AND gate	PLL clock, data buffer.
IC6,7	I/O port	8 bit x 3 x 2.
IC8	CPU	8 bit microprocessor.
IC9	Inverter	Personal computer interface I/O buffer.
IC10	A/D converter	8 bit, 8 channel.
IC11	Multiplexer	A/D data switching.
IC12	Address latch	Multiplexer address/data latchof data output.
IC13	Chip select decoder	Chip select mixer for RAM.
IC14,16	Address decoder	Convert address signal into each IC chip select signal.
IC15	Chip select decoder	Chip select mixer for ROM.
IC17	System reset/backup select	Reset signal generator. Backup voltage supply select of IC13 RAM.
IC18	RAM	8 bit x 8192 (8 Kbyte)
IC19	ROM	8 bit x 65536 (64 Kbyte)
IC20,21	Encoder gate array	Pulse count of encoder.
IC22	Schmitt trigger	Chattering absorption of encoder.
IC23	NAND gate	Oscillator for electronic keyer speed.
IC24	CPU	4 bit microprocessor for electronic keyer control.
IC25	EEPROM	1 bit x 2048 EEPROM for electronic keyer message memory.
IC26	Inverter	Reset logic invert.
Q1	Signal switching	SM-230 sub marker (SMKC).
Q2,3	Signal switching	RX band signal (RB0~RB3).
Q4	Signal switching	AIP signal.
Q5,6	Signal switching	TX band signal (LP0~LP3).
Q7~9	Signal switching	SUB, AT, AIP LED signal.
Q10	Signal switching	TX band indicate signal (TXI).
Q11~13	Signal switching	AGC speed signal (AGO, AGM, AGS).
Q14	Signal switching	Meter select (ALMS).
Q15~17	Signal switching	Mode signal (SSB, CW, FSK, AM, FM, DATA).
Q18	Signal switching	Mode signal (LSB), 500kHz marker signal (CARS).
Q19~21	Signal switching	AT control (PR11, PR12, PR21, PR22, APRE, SPED).
Q22	Signal switching	TX control (KEY line).
Q23	Signal switching	DSP attenuator (MATT).
Q25	Signal switching	DSP B signal (DB).
D4	Protection diode	AT through/auto switch.
D7,8	Protection diode	MIC down/up switch.
D11~18	Switching	Destination select.
D20,21	Protection diode	Dash/dot switch.
D22	Protection diode	KEY line.
D23	Protection diode	Sub meter voltage-over.

IF UNIT (X48-3100-00)

Ref. No.	Use/Function	Operation/Condition/Compatibility
IC1	SUB receive detection	Convert IF 10.695MHz into AF level. 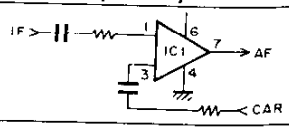
IC300	Operation amplifier	Main and sub S-meter.
Q1	Sub IF amplifier	40.055MHz.

DESCRIPTION OF COMPONENTS

Ref. No.	Use/Function	Operation/Condition/Compatibility
Q2,3	Sub 2nd mixer	40.055MHz → 10.695MHz.
Q4	Switching	On in transmit mode.
Q5	Sub IF amplifier, NB gate	10.695MHz.
Q6	Switching	Turned off when main and sub NB1, NB2 and SRBK pulse occur.
Q7	Switching	Turned on when SRBK pulse occur.
Q8	Switching	Turned on when main and sub NB1, NB2 pulse occur.
Q9,10	Sub IF amplifier	10.695MHz.
Q11	Buffer	10.695MHz AGC.
Q12	Sub AGC amplifier	
Q13	Sub 2nd local amplifier	50.75MHz.
Q14	Main IF amplifier	73.05MHz
Q15,16	Main 2nd mixer	73.05MHz → 8.83MHz.
Q17,18	Switching	Turned on when MRBK pulse occur.
Q19,20	Main 3rd mixer	8.83MHz → 455kHz.
Q21	Switching	Turned off when MNG2 and sub NB2 occur.
Q22	Switching	Turned on when MNG2 and sub NB2 occur.
Q23	Buffer	73.05MHz for IF OUT 1.
Q24	Mixer	73.05MHz → 8.83MHz for IF OUT 1.
Q25	Main LO2 amplifier	64.22MHz.
Q26	Buffer	10.695MHz for sub NB.
Q27~29	Amplifier	10.695MHz for sub NB.
Q30	AGC amplifier	Sub NB.
Q31	Buffer	Sub NB1.
Q32	Switching	Sub NB2.
Q33,34	Switching	Sub NB1.

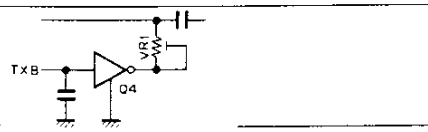

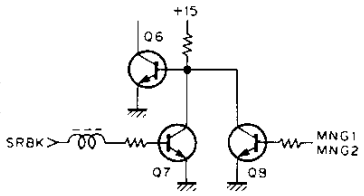

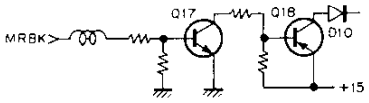

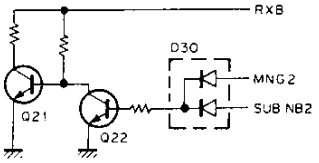

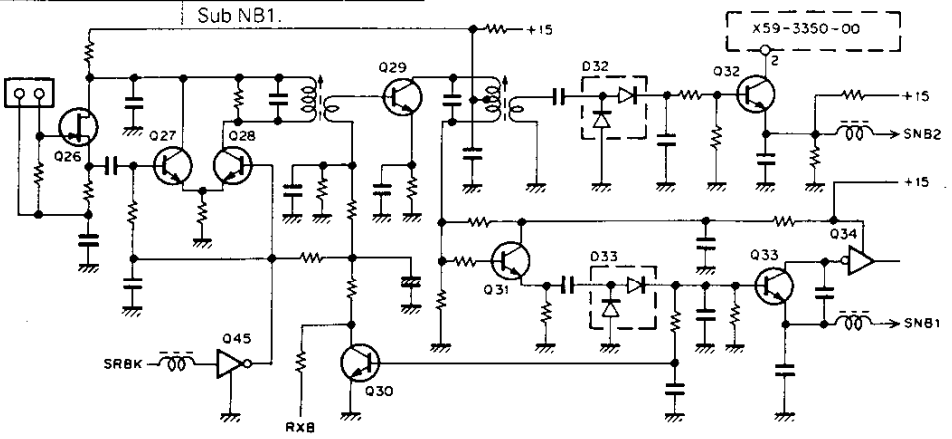

DESCRIPTION OF COMPONENTS

Ref. No.	Use/Function	Operation/Condition/Compatibility
Q35	Switching	Sub NB2.
Q36,37	TIF 2nd mixer	8.83MHz → 73.05MHz.
Q38	TIF amplifier	8.83MHz ALC.
Q39	Main LO3 amplifier	8.375MHz.
Q40	TIF amplifier	8.83MHz.
Q41	TIF 1st mixer	455kHz → 8.83MHz.
Q42	AF amplifier	Phone patch. 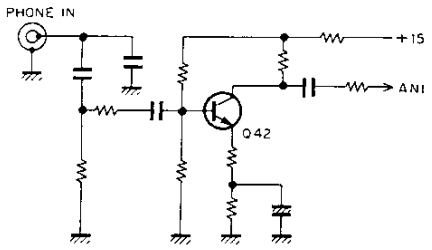
Q44	Buffer	73.05MHz.
Q45	Switching	Turned on when SRBK pulse occur.
Q46	Switching	Turned on when TX/RX select.
Q300~302	Switching	Sub IF filter select.
D1,2	Switching	Sub NB.
D3	Sub AGC detection	
D4	Reverse current prevention	Main AGC.
D5~8	NB gate.	
D9	Voltage regulator	NB gate.
D10	Reverse current prevention	NB gate.
D11	Reverse current prevention	Main NB and sub NB pulse synthesis.
D12	Switching	On in receive mode.
D13~17	Switching	Filter select.
D18	Switching	On in transmit mode.
D19~27	Switching	Filter select.
D28,29	Switching	On in receive mode.
D30	Reverse current prevention	NB2.
D31	switching	On in transmit mode.
D32	Noise blanker detection	Sub NB2.
D33	Noise blanker detection	Sub NB1.
D34	Reverse current prevention	CKY.
D35	Voltage regulator	CKY.
D36	Voltage shift	CKY.
D37,38	Switching	On in transmit mode.
D39	switching	On in receive mode.
D40	Relay surge absorption	Linear amplifier relay.
D42	Voltage shift	Linear amplifier relay.
D43	Reverse current prevention	PSQ.
D44	Switching	Discharge.
D300~305	Switching	Sub IF filter select.

AF UNIT (X49-3050-00)

Ref. No.	Use/Function	Operation/Condition/Compatibility
IC1	Driver (2 x 1/10)	AF VBT clock and sidetone frequency occur.
IC2	Switched capacitor filter x 2	Main and sub AF VBT.
IC3	Switched capacitor filter x 1	Sidetone filter.
IC4 (a/4)	AF select switch	On in DSP operation (Main SSB and CW).

DESCRIPTION OF COMPONENTS

Ref. No.	Use/Function	Operation/Condition/Compatibility
IC4 (b/4)	AF select switch	On in DSP operation (Main SSB and CW).
IC4 (c/4)	Af select switch	Off in DSP operation (Main SSB and CW).
IC4 (d/4)	AF select switch	On in receive mode (Sub AF).
IC5 (a/4)	Af select switch	On in CW AF VBT operation (When main are not using to AF VBT).
IC5 (b/4)	AF select switch	On in CW AF VBT operation (When sub are not using to AF VBT).
IC5 (c/4)	AF select switch	On in CW AF VBT operation (When main are using to AF VBT).
IC5 (d/4)	AF select switch	On in CW AF VBT operation (When sub are using to AF VBT).

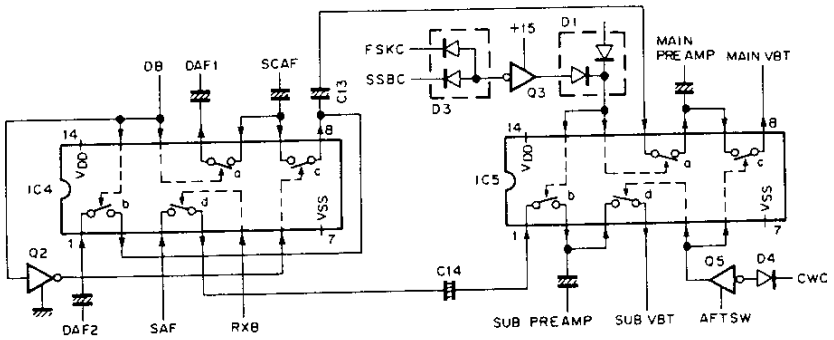

IC6 (a/4)	Sidetone on and off switch	On in CW mode.
IC6 (b/4)	Monitor AF short switch	Receive mode or monitor switch is turned off : short.
IC6 (c/4)	AF select switch	On without FM mode (AF for monitor without FM mode).
IC6 (d/4)		Unused.

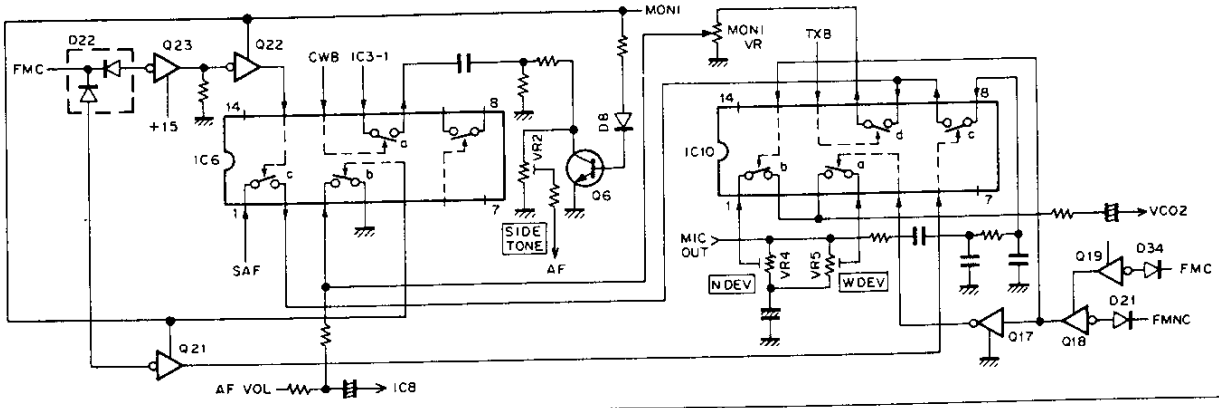

IC7 (a/2)	AF amplifier	Main AF.
IC7 (b/2)	Af amplfier	Sub AF.
IC8 (a/2)	AF amplifier	Main, Sub, and monitor mixing.
IC8 (b/2)		Unused.

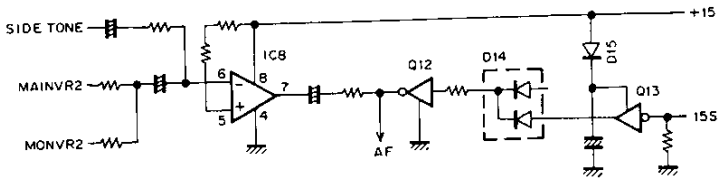

IC9	One shot multi vibrator	Make a VOX delay time. 3 : CD (Input) 4 : A (Input) ; GND 5 : B (Input) 6 : Q (Output)
IC10 (a/4)	FM MIC amplifier output select switch	On in FM WIDE mode.
IC10 (b/4)	FM MIC amplifier output select switch	On in FM NARROW mode.
IC10 (c/4)	AF select switch	On in FM MONITOR mode (AF for FM monitor).

DESCRIPTION OF COMPONENTS

Ref. No.	Use/Function	Operation/Condition/Compatibility
IC10 (d/4)	AF select switch	On in transmit mode (AF monitor).
IC11	PLL1 (Main LO1) (500kHz step 30MHz coverage)	2,3,4 : Divided ratio setting input. 5 : 10MHz input. 7 : Lock voltage output. 8 : Unlock output, when unlocked "H". 11 : 38~68MHz input.
IC12	Mixer (MIX1)	5 : 73.06~103.05MHz input. 11 : 35.05~35.55MHz input. 13 : 38~68MHz output.
IC13	PLL0 (Main LO2)	2,3,4 : Divided ratio setting input. 5 : 10MHz input. 7 : Lock voltage output. 8 : Unlock output, when unlocked "H". 12 : 64.22MHz input.
IC14	AVR	10V (in the AF unit).
IC15	AVR	5V (in the AF unit).
Q1	AFT amplifier	80kHz ± 50kHz.
Q2	Switching	On when DSP operation.
Q3	Switching	On in FSK or SSB mode.
Q4	Switching	On in AF VBT operation.
Q5	Switching	On in CW mode.
Q6	Muting	On when no sidetone output.
Q7	Muting	On when insert a key plug into jack.
Q8	Muting	On in transmit, MABK and SQ mode (Main mute).
Q9	Muting	On in transmit, SABK and SQ mode (Sub mute).
Q10	AF amplifier	Main REC OUT.
Q11	AF amplifier	Sub REC OUT.
Q12	Muting	When power switch is turned on or off, mute in TX/RX.
Q13	Switching	On for instant when power switch is turned on.
Q14	Switching	On in CW and FSK mode.
Q15	AF amplifier	For sub-tone.
Q16	Muting	On in receive mode (Muted to FM MOD line when receive mode).
Q17,18	Switching	On in FM NARROW mode.
Q19	Switching	On in FM mode.
Q20	AF amplifier	FM MIC signal.
Q21	Switching	On in FM mode.
Q22	Switching	On in FM mode.
Q23	Switching	On in FM mode.
Q24	Switching	VCO select (10kHz~7.5MHz : on).
Q25	Switching	VCO select (7.5MHz~14.5MHz : on).
Q26	Switching	VCO select (14.5MHz~21.5MHz : on).
Q27	Switching	VCO select (21.5MHz~30MHz : on).
Q28	Switching	Unlock detection (PLL0, 1).
Q29~31	PLL1 low-pass filter	Active filter (reference frequency 500kHz).
Q32	VCO1 output amplifier	73.06~103.05MHz.
Q33	MIX1 input buffer	73.06~103.05MHz.
Q34,35	MIX1 output buffer	38~68MHz.
Q36	MIX1 input buffer	35.05~35.55MHz (Main LO1).
Q37	Main LO1 output buffer	73.06~103.05MHz.
Q38	REF buffer	10MHz (Reference of PLL IC).
Q39	Main LO2 output buffer	64.22MHz.
Q40	Buffer	8.83MHz for main NB.
Q41,42	Amplifier	8.83MHz for main NB.
Q43	AGC amplifier	8.83MHz for main NB.
Q44	amplifier	8.83MHz for main NB.
Q45	Buffer	Main NB1.
Q46	Switching	Main NB2.
Q47,48	Switching	Main NB1.
Q49	Switching	Main NB2.

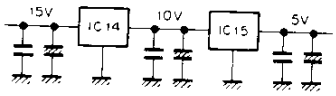

DESCRIPTION OF COMPONENTS

Ref. No.	Use/Function	Operation/Condition/Compatibility
Q51	Switching	On in CW mode (CWB).
Q52	Switching	On in CW mode. 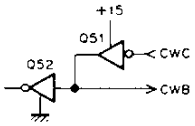
Q53	Muting	On when no sidetone output.
D1,2	Reverse current prevention	
D3	Reverse current prevention	FSKC, SSBC.
D4	Reverse current prevention	CWC.
D5~8	Reverse current prevention	
D9	Reverse current prevention	KEY.
D10	Reverse current prevention	
D11	Reverse current prevention	RBC, SABK
D12	Reverse current prevention	RBC, SQ.
D13	Reverse current prevention	MABK.
D14,15	Reverse current prevention	
D16	Reverse current prevention	VOXDL.
D17	Reverse current prevention	
D19	Reverse current prevention	FSKC, CWC.
D21	Reverse current prevention	FMNC.
D22	Reverse current prevention	
D23	Reverse current prevention	VBC, VBD.
D24	Voltage regulator	VCO1.
D25,26	Reverse current prevention	Unlock signal.
D27	Voltage regulator	VCO0.
D28,29	NB detection	NB2.
D30	NB detection	NB1.
D33	Reverse current prevention	
D34	Reverse current prevention	FMC.

PLL UNIT (X50-3170-00)

Ref. No.	Use/Function	Operation/Condition/Compatibility
IC1	AVR	8V (For PLL CAR unit).
IC2	Divider (1/2, 1/5)	1,14 : 20MHz input. 11 : 4MHz output. 12 : 10MHz output.
IC3	DDS	450~950kHz.
IC4	DDS	790.76~1290.76kHz.
IC5	PLL	2,3,4 : Divided ratio setting input. 5 : 10MHz input. 7 : Lock voltage output. 8 : Unlock output, when unlocked "H". 11 : 97.152MHz input.
IC6	Divider (1/100)	4 : 97.152MHz input. 8 : 971.52kHz output.
IC7	Mixer	1 : 20.97152MHz output. 2 : 971.52kHz input. 5 : 20MHz input.
IC8	Mixer	1 : 13.695~13.195MHz output. 2 : 9.695~9.195MHz input. 5 : 4MHz input.
IC9	Mixer	1 : 4.95~4.45MHz output. 2 : 4MHz input. 5 : 950~450kHz input.
IC10	Mixer	1 : 35.05~35.55MHz output. 2 : 4.95~4.45MHz input. 5 : 40MHz input.
IC11	PLL	2,3,4 : Divided ratio setting input. 5 : 10MHz input. 7 : Lock voltage output. 8 : Unlock output, when unlocked "H". 13 : 3.0~33.0MHz input.
IC12	Mixer	1 : 3.0~33.0MHz output. 2 : 37.055~37.555MHz input. 5 : 40.065~70.055MHz input.
IC13	Mixer	1 : 37.055~37.555MHz output. 2 : 13.695~13.195MHz input. 5 : 50.750MHz input.
Q1	Reference input buffer	20MHz.
Q2,3	Switching	Unlock detection.
Q4	Switching	VCO select (21.5~30MHz : on).

DESCRIPTION OF COMPONENTS

Ref. No.	Use/Function	Operation/Condition/Compatibility
Q5	Switching	VCO select (14.5~21.5MHz : on).
Q6	Switching	VCO select (7.5~14.5MHz : on).
Q7	Switching	VCO select (10kHz~7.5MHz : on).
Q8	Buffer	D/A buffer.
Q9	Amplifier	DDS clock (20.97152MHz).
Q10	Buffer	20MHz.
Q11	Buffer	D/A buffer.
Q12,13	Switching	Chopper.
Q14	Buffer	Chopper output buffer.
Q15	Buffer	4MHz.
Q16	Buffer	LO output (35.05~35.55MHz).
Q17	Doubler	20MHz x 2 = 40MHz.
Q18~20	Amplifier	Active LPF (7.5~30MHz).
Q21~23	Amplifier	Active LPF (10kHz~7.5MHz).
Q24	Buffer	PLL IC input (3.0~33.0MHz).
Q25	Amplifier	PLL IC Input (3.0~33.0MHz).
Q26	Buffer	Sub VCO output (40.065~70.055MHz).
Q27	Buffer	40.065~70.055MHz.
Q28	Buffer	50.750MHz.
Q29	Buffer	Sub VCO output (40.065~70.055MHz).
Q30	Crystal oscillator	50.750MHz.
Q31	Buffer	50.750MHz.
Q32	Buffer	50.750MHz H507 output.
D1	Reverse current prevention	Unlock signal.
D2	Variable capacitor	VCO (97.152MHz).
D3	reverse current prevention	Unlock signal.
D4	Zener diode	Voltage regulator (12V).
D5	Zener diode	Voltage regulator (9V).

CAR UNIT (X50-3180-00)

Ref. No.	Use/Function	Operation/Condition/Compatibility
IC1	PLL5 (Main LO4)	2,3,4 : Divided ratio setting input. 5 : 10MHz input. 7 : Lock voltage output. 8 : Unlock output, when unlocked "H". 11 : 35.5MHz input.
IC2	Divider (1/100)	4 : 35.5MHz input. 8 : 355kHz output.
IC3	PLL6 (Main LO3)	2,3,4 : Divided ratio setting input. 5 : 10MHz input. 7 : Lock voltage output. 8 : Unlock output, when unlocked "H". 11 : 162.5MHz input.
IC4	Divider (1/100)	4 : 162.5MHz input. 8 : 1.625MHzHz output.
IC5	Mixer (MIX7)	1 : 8.375MHz output. 2 : 1.625MHz input. 5 : 10MHz input.
IC6	PLL4 (Main and sub CAR)	2,3,4 : Divided ratio setting input. 5 : 10MHz input. 7 : Lock voltage output. 8 : Unlock output, when unlocked "H". 11 : 69.5MHz input.
IC7	Divider (1/100)	4 : 69.5MHz input. 8 : 695kHz output.
IC8	Mixer (MIX13)	1 : 10.695MHz output. 2 : 695kHz input. 5 : 10MHz input.
IC9	PLL9 (Main CAR)	2,3,4 : Divided ratio setting input. 5 : 10MHz input. 7 : Lock voltage output. 8 : Unlock output, when unlocked "H". 11 : 9.85~13.5MHz input.
IC11	Mixer (MIX8)	When CW PITCH 800Hz 1 : 80kHz output. 2 : 9.92MHz input. 5 : 10MHz input.
IC13	PLL (EXT STD)	9 : 1MHz input. 13 : Lock voltage output. 14 : 10kHz input.
IC14	Divider (1/2, 1/5)	1 : 10MHz output. 11 : 2MHz output. 12 : 10MHz input. 14 : 20MHz input.
IC15	Divider (1/2)	1 : 1MHz output. 3 : 2MHz input.
Q1	Main LO4 output buffer	355kHz.
Q2	MIX7 input buffer	10MHz.

DESCRIPTION OF COMPONENTS

Ref. No.	Use/Function	Operation/Condition/Compatibility
Q3	Main LO3 output amplifier	8.375MHz.
Q4	MIX13 input buffer	10MHz.
Q5	Sub CAR output amplifier	10.695MHz.
Q8	MIX8 input buffer	9.92MHz when CW PITCH 800Hz.
Q9	MIX8 input buffer	10MHz.
Q10	AFT output buffer	30~130kHz in CW mode.
Q11	Main CAR output buffer	100kHz.
Q12	EXT STD buffer	10kHz.
Q13	OSC1	20MHz (STD).
Q14	OSC1 buffer	SO-2 buffer when SO-2 operates.
Q15	TTL input amplifier	20MHz.
Q16	REF output amplifier	20MHz (PLL unit).
Q17	REF output amplifier	10MHz (AF unit).
Q18	REF output amplifier	10MHz (DSP unit).
D1	Reverse current prevention	Unlock signal.
D2	VCO5 frequency adjustable	
D3	Reverse current prevention	Unlock signal.
D4	VCO6 frequency adjustable	
D5	Reverse current prevention	Unlock signal.
D6	VCO4 frequency adjustable	
D7	Reverse current prevention	Unlock signal.
D8	VCO9 frequency adjustable	
D9	VCXO frequency adjustable	OSC1.
D10	Voltage regulator	OSC1.
D14	Reverse current prevention	
D15	Voltage shift	5V power supply for SO-2.

FILTER UNIT (X51-306X-XX) 0-12 : K,M,E,E3,X,P,T 2-71 : E2

Ref. No.	Use/Function	Operation/Condition/Compatibility
IC1	Band data decoder	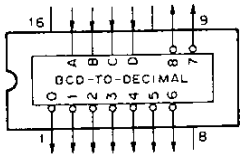
IC2	Relay driver	
IC3	AVR	+5V.
Q1	relay driver	10F relay.
D1	Relay surge absorption	1.6~2.5MHz LPF relay.
D2	Relay surge absorption	2.5~4.0MHz LPF relay.
D3	Relay surge absorption	4.0~7.5MHz LPF relay.
D4	Relay surge absorption	7.5~10.5MHz LPF relay.
D5	Relay surge absorption	10.5~14.5MHz LPF relay.
D6	Relay surge absorption	14.5~21.5MHz LPF relay.
D7	Relay surge absorption	21.5~30.0MHz LPF relay.
D8	RF rectifier	REF rectifier.
D9	RF rectifier	FWD rectifier.
D10	Relay surge absorption	Transmit/receive select relay.
D11	LPF select	18, 21MHz.
D12	LPF select	25, 28MHz.
D13,14	Level shift	12V relay drive.
D15	Lightning surge protection	RAT terminal surge absorber.

DESCRIPTION OF COMPONENTS

AT UNIT (X53-3340-01)

Ref. No.	Use/Function	Operation/Condition/Compatibility
IC1	DFF	Phase difference detection. 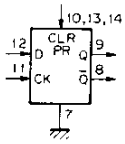 Function table: Inputs (Clock, D) / Outputs (Q, Q̄): ↑ L L H; L X Qo Q̄o
IC2	Analog switch	For control changeover motor 1. 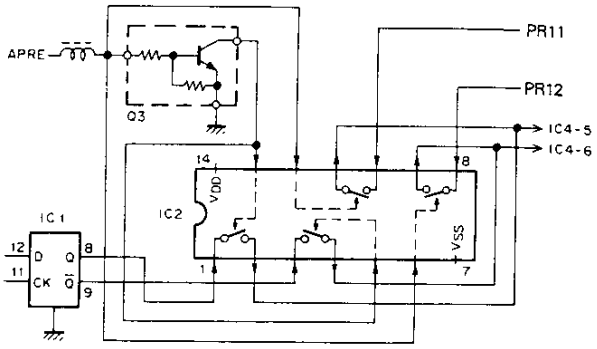
IC3	Analog switch	For control changeover motor 2. 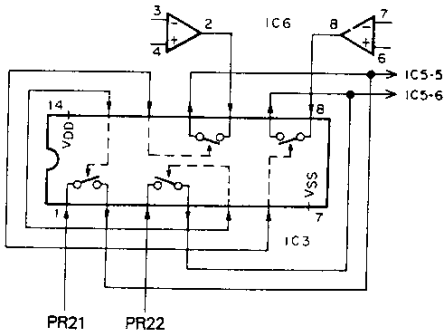
IC4	Motor drive	For motor 1. 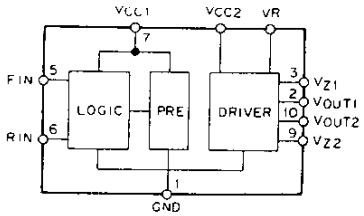
IC5	Motor drive	For motor 2.
IC6	Comparator	Amplification difference detection.
IC7	AVR	+5V.
Q1,2	Amplifier	Waveform shaping.
Q3	Switching	On when APRE is "H".
Q4,5	Switching	Motor speed control pulse.
D1	Detection	Current component amplification detection.
D2	Detedtion	Voltage component amplification detction
D3~8	Switching	Clipper
D10	Switching	Spike absorption.
D101~103	Switching	Spike absorption.
D105~108	Switching	Spike absorption.
D109,110	Switching	Band information.

DESCRIPTION OF COMPONENTS

CONTROL UNIT (X53-3380-00)

Ref. No.	Use/Function	Operation/Condition/Compatibility
IC1	Operation amplifier	1-2-3 : Power meter.
IC2	3 terminal AVR	Input : 15V. Output : 8V.
IC3	Operation amplifier	1-2-3 : ALC meter. 5-6-7 : Ic meter.
IC4	Operation amplifier	Main audio amplifier.
IC5	Operation amplifier	1-2-3 : Sub audio amplifier.
IC6	Operation amplifier	Sub audio amplifier.
IC7	Analog switch	ALC/Ic and PWR/main S meter select.
IC8	Analog switch	Speaker separate select.
IC9	One shot multi vibrator	2-3-4-5-7 : CKY timing. 10-11-12-13-14-16 : Semi break-in timing.
IC10	NAND gate	1-2-3 : CKY. 4-5-6 : RBC.
IC11	Inverter	8-9, 10-11, 12-13 : CKY.
IC12	Analog switch	1-2-13, 3-4-5 : CKY.
IC13	Inverter	1-2, 5-6 : Semi. 3-4 : Full. 12-13 : VOX. 8-9, 10-11 : Pulse delay.
IC14	NAND gate	1-2-3 : CKY. 8-9-10 : Semi. 11-12-13 : Full.
IC15	Inverter	1-2, 3-4, 8-9, 10-11 : Pulse delay.
IC16	Analog switch	1-2-3 : Full. 3-4-5 : Semi. 6-8-9, 10-11-12 : VOX.
Q1,2	Differential amplifier	ALC.
Q3	Switching	Power down.
Q4~7	Switching	AT tune.
Q8	Amplifier	ALC.
Q9	Amplifier	SWR protection.
Q10	Amplifier	IC protection.
Q11	Voltage shift	ALC meter voltage.
Q12	Buffer	ALC voltage control.
Q13	Switching	ALC/Ic meter select.
Q14,15	Switching	Main and sub audio mute.
Q16,17	Switching	Relay select.
Q18,19	Switching	CKY delay select.
Q20	Switching	Discharge.
Q21,22	Switching	CKY delay select.
Q23	Switching	TXB delay select.
Q24	Switching	Stand-by control.
Q25	Switching	VOX.
Q26	Switching	CKY select in CW mode.
Q27	Muting	Sub audio mute.
Q28	Switching	CKY delay select.
D1	Switching	Temperature power down.
D2	Switching	28MHz and 50W power down.
D3	Switching	AT.
D4,5	Voltage shift	External ALC.
D6	Reference voltage	4.7V.
D7	Voltage shift	4.7V
D8	Voltage shift	
D9	Reverse current prevention	
D10	Over load prevention	Maximum 4.7V.
D11	Switching	TXB, separate.
D12,13	Voltage shift	
D14	Reference voltage	15V.
D15,16	Surge voltage absorption	
D17~19	Reverse current prevention	
D20	Switching	KEY, ATS.
D21~24	Switching	CKY.
D25	Switching	Discharge.

DESCRIPTION OF COMPONENTS

Ref. No.	Use/Function	Operation/Condition/Compatibility
D26,27	Switching	CTXB.
D28	Reverse current prevention	
D29~33	Switching	SS.
D34	Switching	SS, ATS.
D35	Switching	D15, CKY.
D36	Switching	Discharge.
D37	Reference voltage	5.1V.
D38	Switching	Sub mute.
D39,40	Over load prevention	Maximum 4.7V.
D41,43	Switching	Discharge.
D42	Reverse current prevention	
D44,45	Switching	SSB.
D46	Over load prevention	Maximum 4.7V.

DSP UNIT (X53-3390-00)

Ref. No.	Use/Function	Operation/Condition/Compatibility
IC1	Power supply	+5V.
IC2	Power supply	−5V.
IC3	Switching	Resistor select of HPF 1st stage.
IC4	Switching	Resistor select of HPF 2nd stage.
IC5	Operation amplifier	MIC amplifier, HPF 1st stage.
IC6	Operation amplifier	HPF 2nd stage, RIF amplifier.
IC7	Switching	A/D converter input select.
IC8	LPF	Limiter amplifier, 5th LPF (AAF).
IC9	Operation amplifier	Limiter amplifier clipper.
IC10,11	Operation amplifier	S/H amplifier.
IC12	A/D converter	16 bit.
IC13	Divider	0 input limit cycle supression.
IC14	Gate	Buffer.
IC15	Latch	Timing adjust.
IC16	D/A converter	16 bit.
IC17	Switching	D/A output chopper.
IC18	Operation amplifier	D/A buffer.
IC19	LPF	5th LPF (SMF).
IC20	Switching	Mixer, detector output on/off.
IC21	DSP	Signal processor.
IC22	Gate array	Timing, DSP and analog interface.
IC23	Gate	Timing adjustment from DSP to gate array.
IC24	Power supply voltage detect	DSP unit power on reset.
IC25	Power supply	+5V local regulator for PLL IC.
IC26	PLL	
Q1	Switching	S/H.
Q2	Buffer	Mixer.
Q3	Amplifier	Modulator output.
Q5	Buffer	Modulator output.
Q6	Switching	TXB level conversion.
Q7	Switching	RTK level conversion.
Q8	Amplifier	Level conversion to gate array.
Q9	amplifier	PLL reference amplifier.
Q10	Buffer	PLL active filter.
Q11,12	Amplifier	PLL active filter.

DESCRIPTION OF COMPONENTS

Ref. No.	Use/Function	Operation/Condition/Compatibility
Q13	OSC	VCO.
Q14	Buffer	VCO buffer.
Q15	Buffer	Buffer to digital section.
D1	Zener diode	level shift.
D2	Switching	Limiter amplifier.
D3	Switching	Input protection.
D4	Variable capacitor	VCO.

DISPLAY UNIT (X54-3080-01)

Ref. No.	Use/Function	Operation/Condition/Compatibility
IC1	Display sub CPU	FL tube, LED, sub-tone and BZ mixer.
IC2,3	Display gate array	FL tube control port output.
IC4	Address decoder	Each IC chip select.
IC5	Function LED latch	
IC6	Sub-tone output latch	Sub-tone D/A converter output.
IC7	Inverter	Logic inverted.
IC8	Sub-tone control, reset control	
IC9	Output latch	BZ and option VS-2 data output.
IC10	Oscillator gate	BZ and 1750Hz tone oscillator.
Q1~137	FL tube starter driver	FL tube starter voltage driver from TTL level.
D1	FL tune heater bias voltage	Between F and F : Approx. AC 9.6V. Between FG and G : Approx. DC −28V.

SIGNAL UNIT (X57-4130-00)

Ref. No.	Use/Function	Operation/Condition/Compatibility
IC1 (a/4)	AGC select switch	SSB, CW and AM mode select.
IC1 (b/4)	AGC select switch	AGC time constant (MID).
IC1 (c/4)	AGC select switch	AGC time constant (SLOW).
IC1 (d/4)		Unused.
IC2 (a/2)	CAR squelch amplifier	
IC2 (b/2)	FM squelch amplifier	
IC3	FM pre-amplifier	
IC4 (a/4)		Unused.
IC4 (b/4)	Select switch	
IC4 (c/4)	Select switch	
IC4 (d/4)		Unused.
IC5	Transmitter IF amplifier	455kHz.

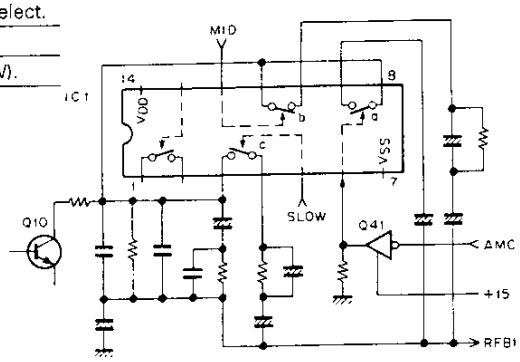

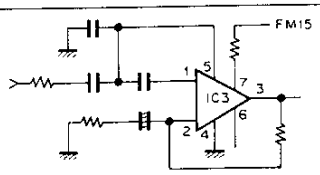

TS-950SDX

DESCRIPTION OF COMPONENTS

Ref. No.	Use/Function	Operation/Condition/Compatibility
IC6,7	Receive FM IF amplifier	2 : Input. 5 : Output.
IC8	I/O interface	2~11 : I/O. 12 : SO input. 13 : SI input. 14 : CK input.
IC10 (a/4)	Select switch	AGC select of AM/SSB, CW.
IC10 (b/4)	Select switch	AF output select of AM/FM.
IC10 (c/4)	Select switch	Meter select of SSB/FM.
IC10 (d/4)	Select switch	Meter select of SSB/FM.
Q1,2	Receive IF amplifier	455kHz.
Q3	Receive 4th mixer	455kHz → 100kHz.
Q4	IF amplifier	100kHz.
Q5	Switching	RBC signal.
Q6	Buffer	AF.
Q7	Local frequency amplifier	355kHz.
Q8	CAR buffer	100kHz.
Q9	AGC buffer	
Q10~13	AGC amplifier	
Q19,20	FM noise amplifier	
Q22	CAR squelch amplifier	
Q25,27	Transmitter IF buffer	455kHz.
Q28	Receive FM IF amplifier	455kHz.
Q29	FM AF AGC amplifier	
Q30,33	Processor amplifier	455kHz.
Q34	FM S-meter amplifier	455kHz.
Q35,36	Switching	
Q37	Switching	NFM15.
Q38	Switching	FM15.
Q39	Switching	
Q41	Switching	AM15.
Q42,43	Switching	
Q48	Switching	DFM.
Q49	Switching	DCAR.
Q50	Switching	

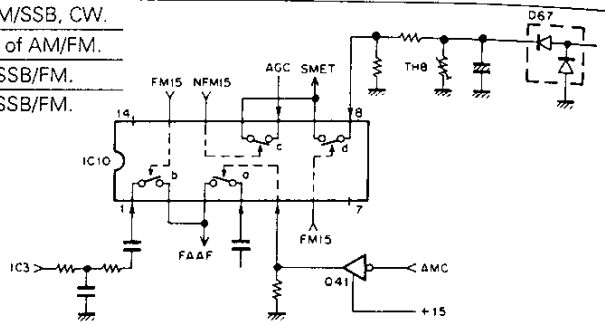

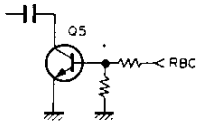

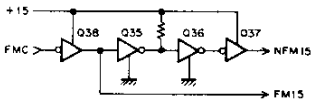

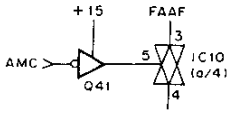

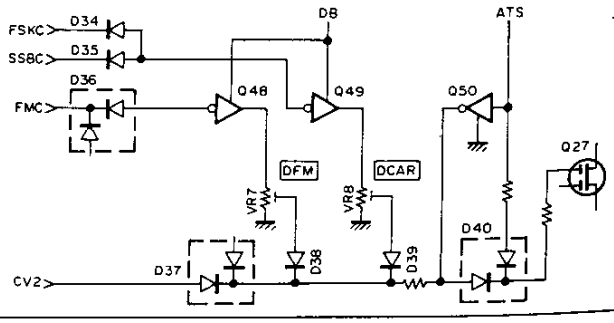

DESCRIPTION OF COMPONENTS

Ref. No.	Use/Function	Operation/Condition/Compatibility
Q51,52	Switching	
Q53~55	Switching	FM mode. 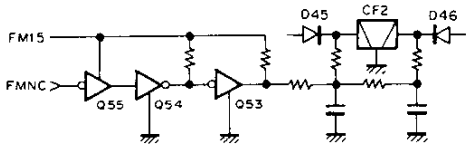
Q56	Switching	AGS. 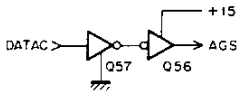
Q57	Switching	
Q58,59	Switching	D15.
Q60	Switching	SSBB.
Q61,62	Switching	CV1.
Q64,65	Switching	
Q66	Switching	SQ.
Q67	Switching	
Q301~303	Switching	Notch.
Q304	Buffer	IF.
D1	Switching	Transmitter 455kHz signal.
D2,3	switching	Receive 455kHz signal.
D4,5	Switching	CWN filter.
D6,7	Switching	CW filter.
D8,9	Switching	SSB filter.
D10,11	Switching	AM filter.
D14	Switching	Receive 455kHz signal.
D15	Tuning	Notch frequency.
D20	Voltage regulator	5V.
D21,22	Detection	AM.
D23	Detection	AGC.
D24	Reverse current prevention	AGO + FM15.
D27	Reverse current prevention	
D28	Temperature compensation	AGC.
D29	Reverse current prevention	AGC.
D31	Detection	FM squelch.
D32	Reverse current prevention	
D34	Reverse current prevention	FSKC.
D35	Reverse current prevention	SSBC.
D36	Reverse current prevention	
D37	Reverse current prevention	FMC + CV2.
D38	Reverse current prevention	DFM.
D39	Reverse current prevention	DCAR.
D40	Reverse current prevention	
D42	Detection	CAR squelch.
D43	Protection	Comparator input.
D44	Reverse current prevention	
D45,46	Switching	FM 12kHz filter.
D47,48	Switching	FM 6kHz filter.
D49,50	Detection	FM.
D51	Rectifier	FM AGC.
D52	Reverse current prevention	SSBC.
D53,56,59	Reverse current prevention	
D60	Switching	Processor.

DESCRIPTION OF COMPONENTS

Ref. No.	Use/Function	Operation/Condition/Compatibility
D61,62,64	Switching	455kHz.
D65	Limiter	Compression meter.
D66	Rectifier	Compression meter.
D67	Rectifier	FM S-meter.
D68,69	Reverse current prevention	
D70	Reverse current prevention	ATS.
D71	Voltage regulator	9V.
D74	Temperature compensation	RFG.

VCO2 (X58-3390-03) : AF UNIT

Ref. No.	Use/Function	Operation/Condition/Compatibility
Q1	VCO0 (PLL0)	64.22MHz.
Q2	VCO0 buffer	
D1	VCO0 frequency adjustable	

VCO (X58-3630-00) : AF UNIT

Ref. No.	Use/Function	Operation/Condition/Compatibility
Q1	VCO1-A (PLL1)	73.06~80.55MHz.
Q2	VCO1-B (PLL1)	80.55~87.55MHz.
Q3	VCO1-C (PLL1)	87.55~94.55MHz.
Q4	VCO-1D (PLL1)	94.55~103.05MHz.
D1	VCO1-A frequency adjustable	
D2	VCO1 switching	On when VAC is "L".
D3	VCO1-B frequency adjustable	
D4	VCO1 switching	On when VBC is "L".
D5	VCO1-C frequency adjustable	
D6	VCO1 switching	On when VCC is "L".
D7	VCO1-D frequency adjustable	
D8	VCO1 switching	On when VDC is "L".

VCO (X58-3630-01) : PLL UNIT

Ref. No.	Use/Function	Operation/Condition/Compatibility
Q1	VCO7-D (PLL7)	61.055~70.055MHz.
Q2	VCO7-C (PLL7)	54.055~62.055MHz.
Q3	VCO7-B (PLL7)	47.055~55.055MHz.
Q4	VCO7-A (PLL7)	40.065~48.055MHz.
D1	VCO7-D frequency adjustable	
D2	VCO7 switching	On when VAC is "L".
D3	VCO7-C frequency adjustable	
D4	VCO7 switching	On when VBC is "L".
D5	VCO7-B frequency adjustable	
D6	VCO7 switching	On when VCC is "L".
D7	VCO7-A frequency adjustable	
D8	VCO7 switching	On when VDC is "L".

DESCRIPTION OF COMPONENTS

VOX (X59-1080-01) : AF UNIT

Ref. No.	Use/Function	Operation/Condition/Compatibility
IC1 (1/2)	VOX level comparator	
IC1 (2/2)	ANTI VOX level comparator	
IC2	NOR circuit	
Q1	Switching	On when 11 pin of IC2 is "H".
D1,2	Reverse current prevention	

FM MIC AMP (X59-3000-03) : AF UNIT

Ref. No.	Use/Function	Operation/Condition/Compatibility
IC1 (1/2)	Low-pass filter	1,2 : Output.
IC1 (2/2)	Limiting amplifier	6 : Input. 7 : Output.

NB2 (X59-3350-00) : IF, AF UNIT

Ref. No.	Use/Function	Operation/Condition/Compatibility
IC1	One shot multi-vibrator	Synchronized with pulse 5ms or 40ms.
Q1,2	Switching	Q1 turned on with 5ms when pulse occurs and Q2 turned off with 40ms.

VCO1 (X59-3440-00) : PLL, CAR UNIT

Ref. No.	Use/Function	Operation/Condition/Compatibility
Q1	VCO	30~110MHz.
Q2	VCO buffer	

LPF (X59-3450-XX) -00 : AF UNIT -01 : PLL, CAR UNIT

Ref. No.	Use/Function	Operation/Condition/Compatibility
Q1~3	PLL low-pass filter	Active filter.

MKR (X59-3640-00) : CAR UNIT

Ref. No.	Use/Function	Operation/Condition/Compatibility
IC1 (1/2)	Divider (1/2)	
IC1 (2/2)	Divider (1/2)	
D1	Switching	On when CALS is "L".
D2	Reverse current prevention	

CWT (X59-3660-00) : CONTROL UNIT

Ref. No.	Use/Function	Operation/Condition/Compatibility
Q201	Switching	Keying signal.
Q202	Switching	Transmitter voltage supply.
Q203~205	Switching	Transmitter stop signal.
Q206~208	Switching	Keying switch.
D201,202	Reverse current prevention	
D203	Reference voltage	3.6V.
D204	Reference voltage	4.7V.

DESCRIPTION OF COMPONENTS

MAP (X59-3670-00) : CONTROL UNIT

Ref. No.	Use/Function	Operation/Condition/Compatibility	
IC301	Meter amplifier	1-2-3 : SWR meter.	5-6-7 : Processor meter.

TRX (X59-3680-00) : CONTROL UNIT

Ref. No.	Use/Function	Operation/Condition/Compatibility
Q151	Switching	Receive voltage supply.
Q152	Switching	Transmitter voltage supply.
Q153	Switching	Transmitter.
Q154,155	Switching	Receive.

ALC (X59-3700-00) : CONTROL UNIT

Ref. No.	Use/Function	Operation/Condition/Compatibility
Q251	Switching	CKY and DSP.
Q252,253	Switching	Stand=by switch control.
Q254	Switching	AT switch.
Q255	Switching	Personal computer interface.
D251	Reverse current prevention	
D252	Reference voltage	12V.

MIC AMP (X59-3710-01) : SWITCH UNIT (A)

Ref. No.	Use/Function	Operation/Condition/Compatibility
Q251	MIC amplifier	Amplified input signal from MIC.
Q252	Packet communication switch	Muted to MIC amplifier when using a packet communication.
Q253	Data switch	Muted to MIC amplifier when using a data communication.
Q254	MIC amplifier switch	Muted to MIC amplifier.
Q255	Packet communication stand-by switch	Transmitter signal to supply when using a packet communication.
D251	Reverse current prevention	

SEMICONDUCTOR DATA

Final Amplifier : MRF150MP (Final unit Q4)

- **Outside view**

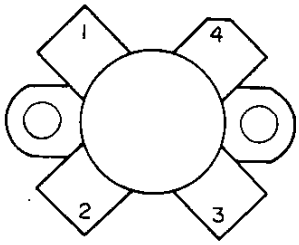

1 : Source
2 : Gate
3 : Source
4 : Drain

- **Maximum rating**

Rating	Symbol	Value	Unit
Drain-Source voltage	V_{DSS}	125	Vdc
Drain-Gate voltage	V_{CGO}	125	Vdc
Gate-Source voltage	V_{GS}	±40	Vdc
Drain current-continuous	I_D	16	Adc
Total device dissipation @ Tc = 25°C	P_D	300	W
Derate above 25°C		1.71	W/°C
Storage temperature range	Tstg	−65 to +150	°C
Operating junction temperature	T_J	200	°C

EEPROM : NM93C66EM83 (Digital unit IC1, IC25)

- **Terminal connection diagram**

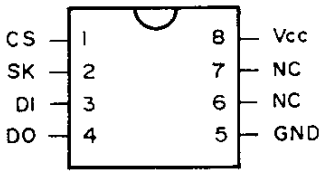

- **Terminal name**

CS	Chip select
SK	Serial data clock
DI	Serial data input
DO	Serial data output
GND	Ground
Vcc	Power supply

- **Block diagram**

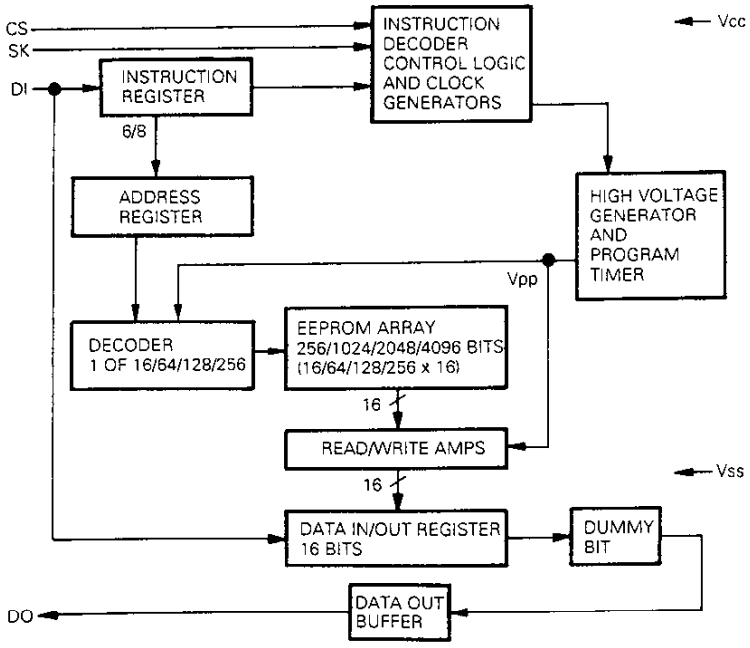

SEMICONDUCTOR DATA

Chip Select Decoder : TC74HC148AF (Digital unit IC15)

- **Terminal connection diagram**

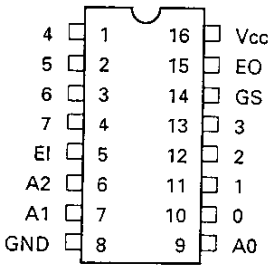

- **Logic diagram**

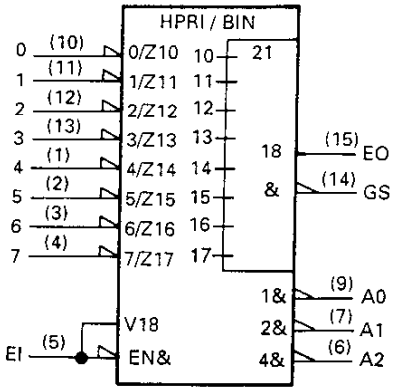

- **Truth table**

INPUTS									OUTPUTS				
EI	0	1	2	3	4	5	6	7	A2	A1	A0	GS	EO
H	X	X	X	X	X	X	X	X	H	H	H	H	H
L	H	H	H	H	H	H	H	H	H	H	H	H	L
L	X	X	X	X	X	X	X	L	L	L	L	L	H
L	X	X	X	X	X	X	L	H	L	L	H	L	H
L	X	X	X	X	X	L	H	H	L	H	L	L	H
L	X	X	X	X	L	H	H	H	L	H	H	L	H
L	X	X	X	L	H	H	H	H	H	L	L	L	H
L	X	X	L	H	H	H	H	H	H	L	H	L	H
L	X	L	H	H	H	H	H	H	H	H	L	L	H
L	L	H	H	H	H	H	H	H	H	H	H	L	H

X : Don't care

- **System diagram**

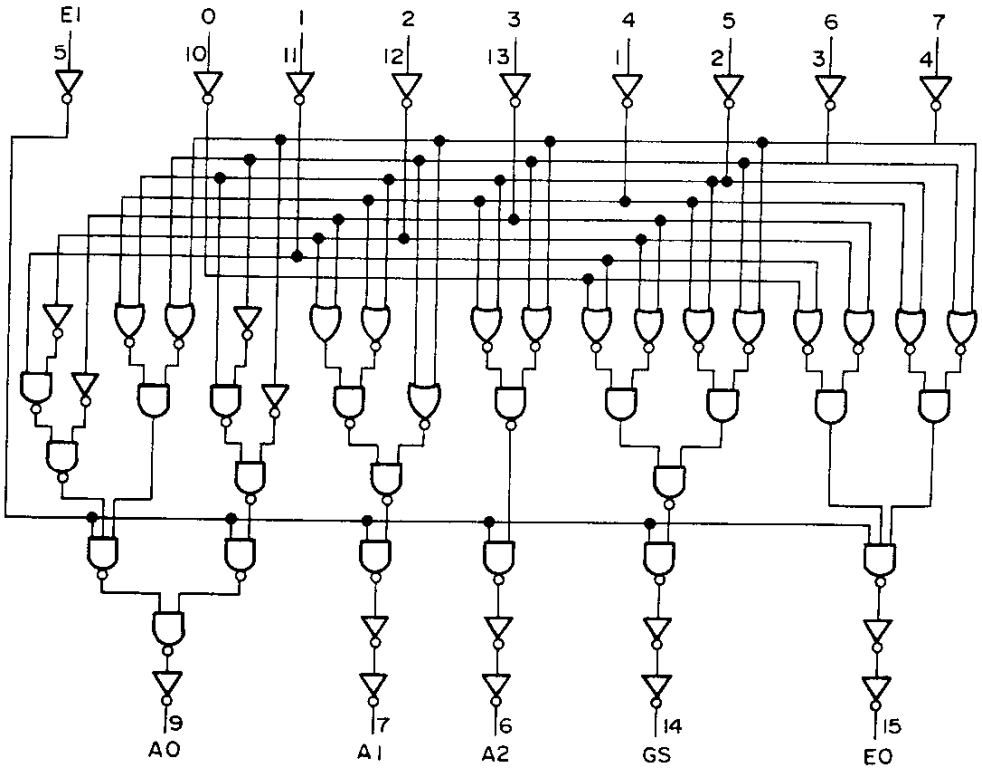

SEMICONDUCTOR DATA

RAM : LC3564PML-12 (Digital unit IC18)

- **Terminal connection diagram**

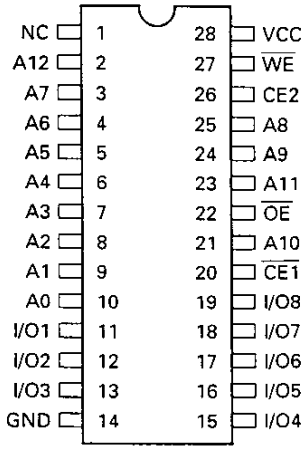

- **Function table**

Mode	$\overline{CE1}$	CE2	$\overline{OE}$	$\overline{WE}$	I/O	Power
Read cycle	L	H	L	H	Data output	ICCA
Write cycle	L	H	X	L	Data input	ICCA
Output disable	L	H	H	H	High impedance	ICCA
Not select	H	X	X	X	High impedance	ICCS
	X	L	X	X	High impedance	ICCS

X : H or L

- **Block diagram**

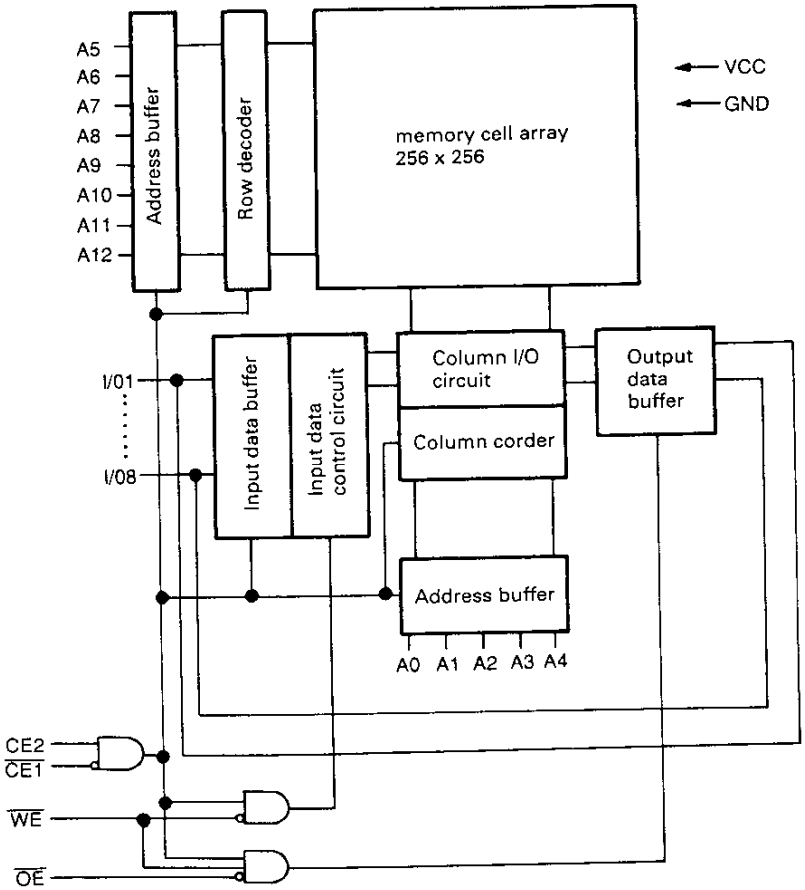

A_0~A_{12}	: Address input
$\overline{WE}$	: Read/write control input
$\overline{OE}$	: Output enable input
$\overline{CE1}$, CE2	: Chip enable input
I/O_1~I/O_8	: Data input/output
Vcc, GND	: Power supply

SEMICONDUCTOR DATA

CPU : 75004GB-746-3B4 (Digital unit IC24)

- **Terminal connection diagram**

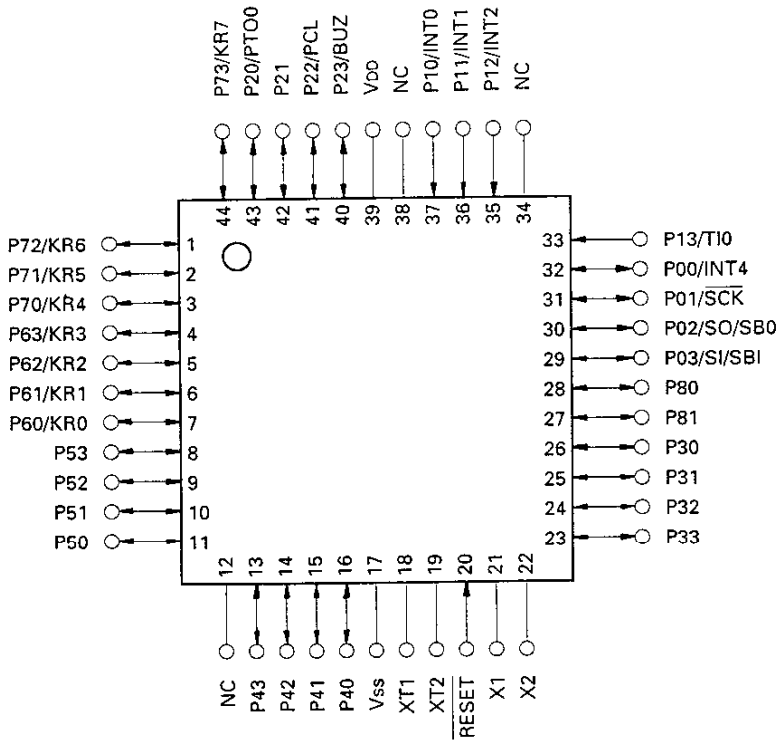

- **Block diagram**

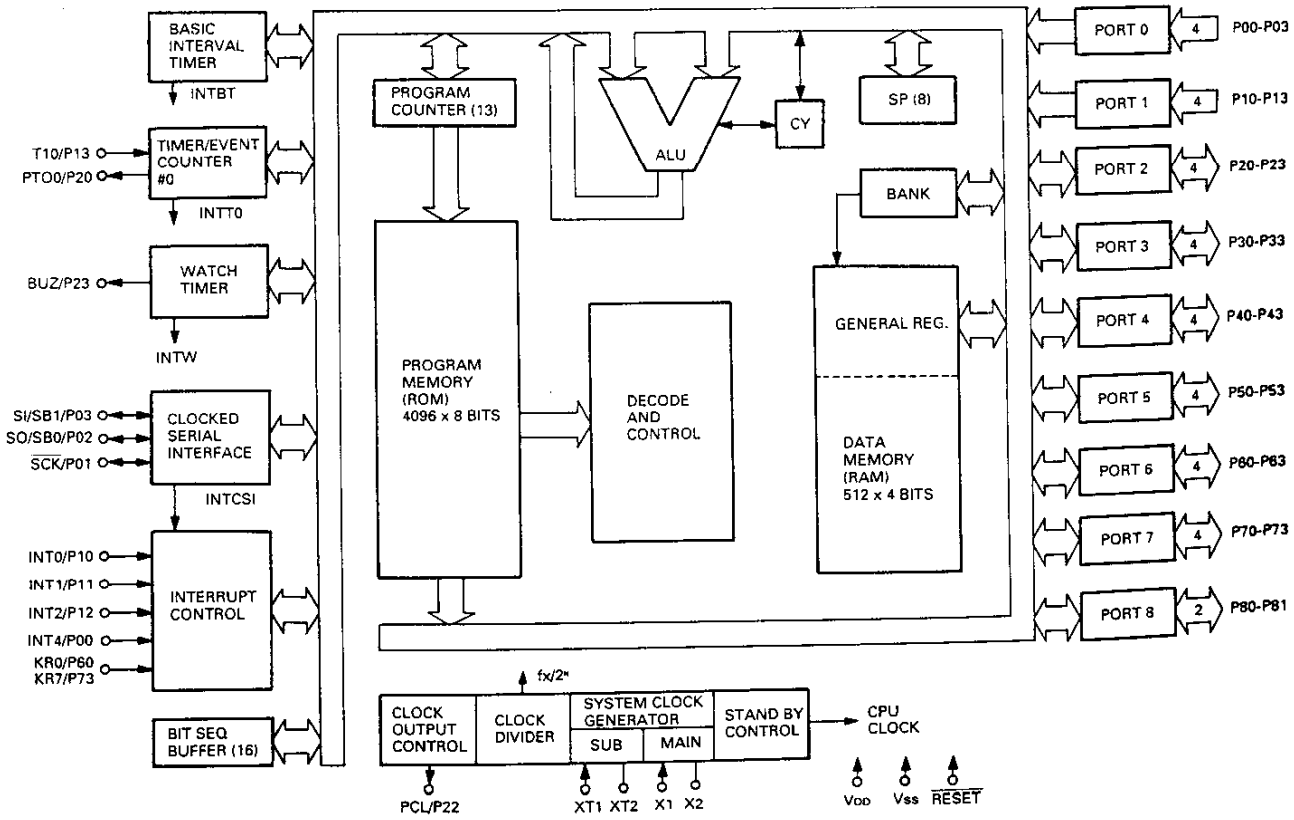

SEMICONDUCTOR DATA

Multiplexer : TC4053BF (Digital unit IC11)

- **Terminal connection diagram**

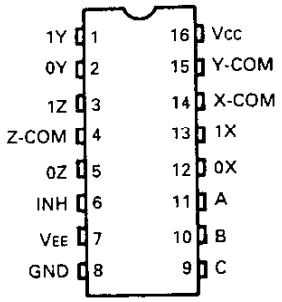

- **Truth table**

CONTROL INPUTS				"ON" CHANNEL
INHIBIT	C	B	A	
L	L	L	L	0X,0Y,0Z
L	L	L	H	1X,0Y,0Z
L	L	H	L	0X,1Y,0Z
L	L	H	H	1X,1Y,0Z
L	H	L	L	0X,0Y,1Z
L	H	L	H	1X,0Y,1Z
L	H	H	L	0X,1Y,1Z
L	H	H	H	1X,1Y,1Z
H	X	X	X	NONE

X : Do not care

- **Logic diagram**

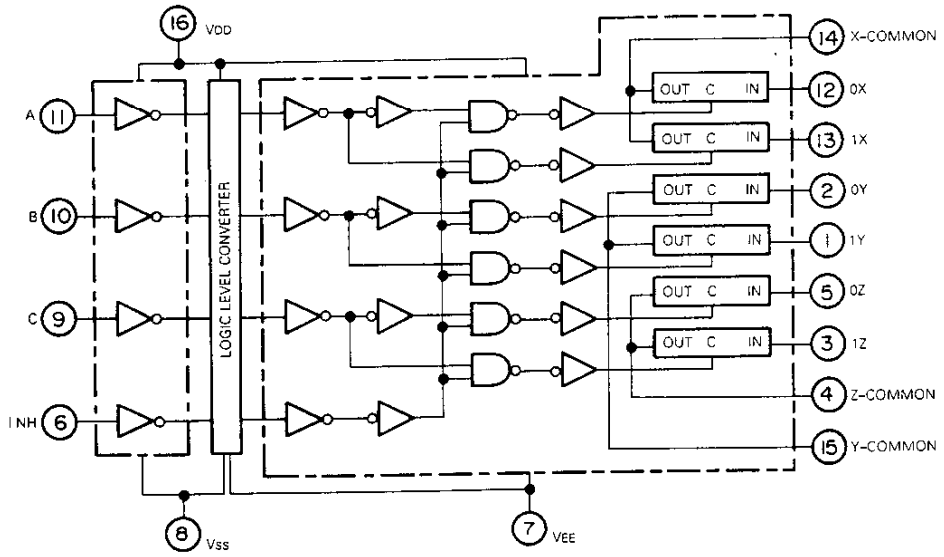

- **Truth table**

CONTROL C	Impedance Between IN–OUT *
H	0.5~5 x $10^2\Omega$
L	$>10^9\Omega$

*See Electrical Charactoristics

Divider : M54459L (PLL unit IC6, CAR unit IC2, IC4, IC7)

- **Block diagram**

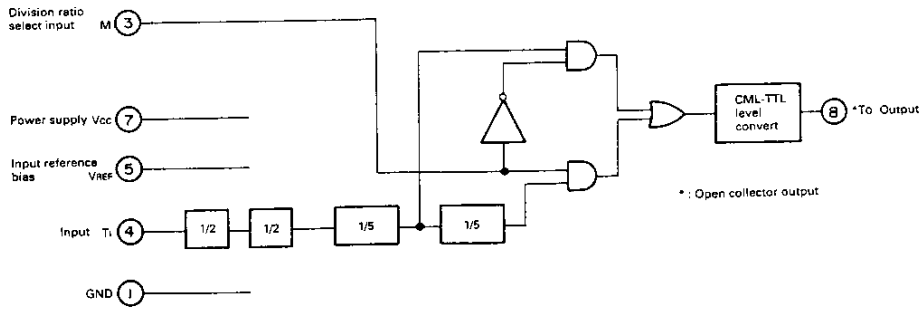

M	"L"	"H"
Divided output	1/20	1/100

SEMICONDUCTOR DATA

Address Decoder : TC74HC138AF (Digital unit IC14, IC16, Display unit IC4)

- **Terminal connection diagram**

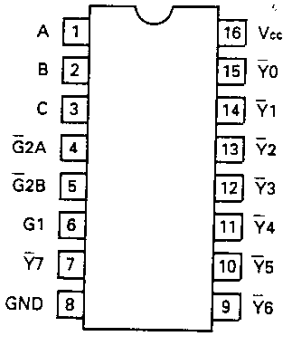

- **Logic diagram**

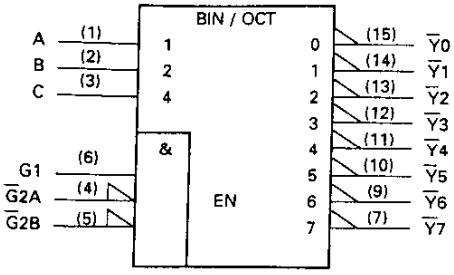

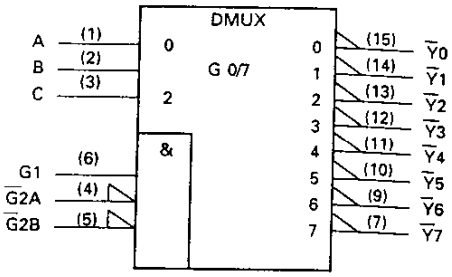

- **Truth table**

Inputs						Outputs								Selected Output
Enable			Select											
G1	$\overline{G2A}$	$\overline{G2B}$	C	B	A	$\overline{Y0}$	$\overline{Y1}$	$\overline{Y2}$	$\overline{Y3}$	$\overline{Y4}$	$\overline{Y5}$	$\overline{Y6}$	$\overline{Y7}$	
L	X	X	X	X	X	H	H	H	H	H	H	H	H	NONE
X	H	X	X	X	X	H	H	H	H	H	H	H	H	NONE
X	X	H	X	X	X	H	H	H	H	H	H	H	H	NONE
H	L	L	L	L	L	L	H	H	H	H	H	H	H	$\overline{Y0}$
H	L	L	L	L	H	H	L	H	H	H	H	H	H	$\overline{Y1}$
H	L	L	L	H	L	H	H	L	H	H	H	H	H	$\overline{Y2}$
H	L	L	L	H	H	H	H	H	L	H	H	H	H	$\overline{Y3}$
H	L	L	H	L	L	H	H	H	H	L	H	H	H	$\overline{Y4}$
H	L	L	H	L	H	H	H	H	H	H	L	H	H	$\overline{Y5}$
H	L	L	H	H	L	H	H	H	H	H	H	L	H	$\overline{Y6}$
H	L	L	H	H	H	H	H	H	H	H	H	H	L	$\overline{Y7}$

X : Don't care

- **System diagram**

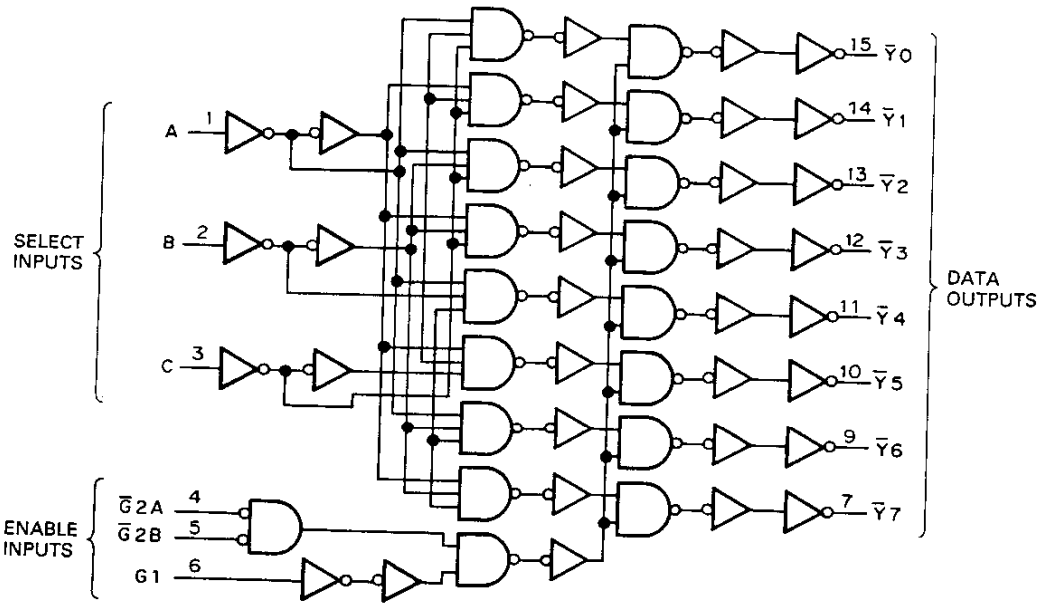

SEMICONDUCTOR DATA

PLL : CXD1225M (AF unit IC11, IC13, PLL unit IC5, IC11, DSP unit IC26)

- Terminal connection diagram
- Block diagram

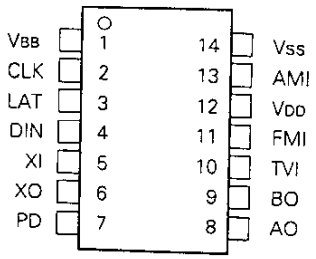

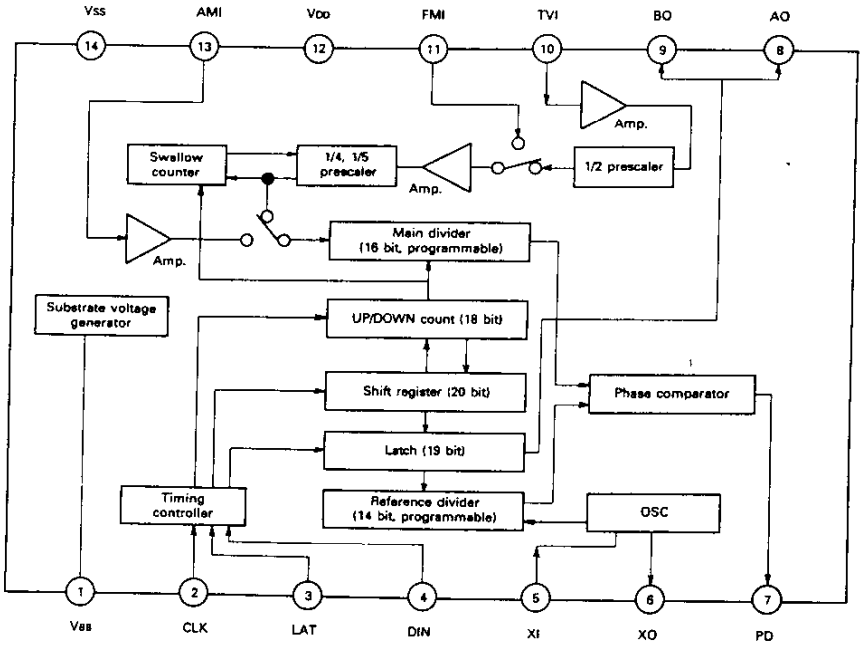

- Terminal description

Pin No.	Symbol	Description
1	VBB	Board terminal (connection a 0.01μF capacitor between GND).
2	CLK	Clock input for 20-bit series data input (shifted by rise).
3	LAT	Latch signal input terminal for shift register input data (latched by rise) and up/down clock input terminal (Changes the state at rise).
4	DIN	Data input terminal and up/down mode select terminal (up mode for "H" level, down mode for "L" level).
5	XI	Reference signal generating oscillator connecting terminal (max. 13MHz, standard 4.0MHz).
6	XO	
7	PD	Phase comparator output terminal (3 states).
8	AO	External control signal output terminal/unlock output terminal (E/E MOS push-pull).
9	BO	External control signal output/data check terminal (E/E MOS push-pull).
10	TVI	RF signal input terminal (300MHz or 350MHz max.). 1/2 prescaler incorporated.
11	FMI	RF signal input terminal (150MHz or 180MHz max.)
12	VDD	Power supply (+5V).
13	AMI	RF signal input terminal (40MHz or 50MHz max.).
14	Vss	GND terminal.

SEMICONDUCTOR DATA

Power Supply Voltage Detect : S-8054ALR-LN (DSP unit IC24)

- **Block diagram**

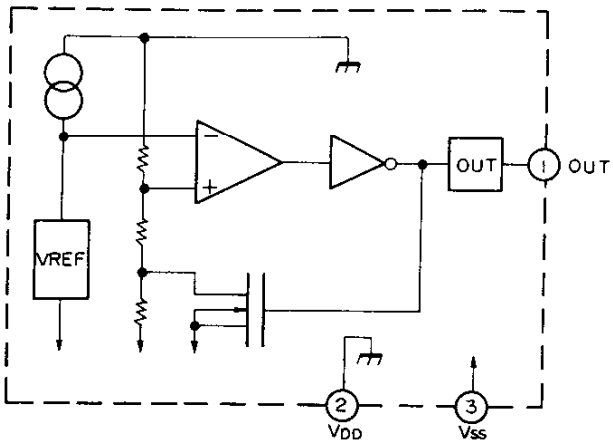

- **Outside view**

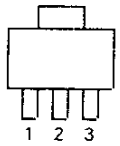

1 : Output
2 : VDD
3 : Vss

- **Operation timing chart**

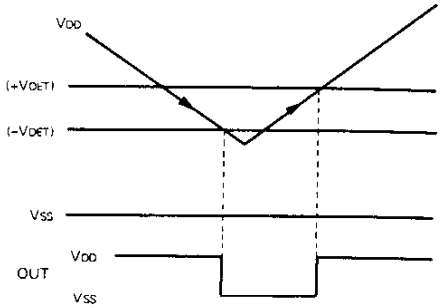

LPF : KCE05 (DSP unit IC8, IC19)

- **Outside view**

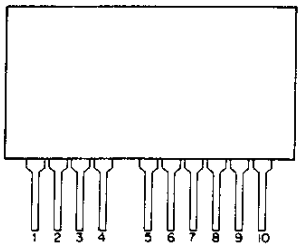

- **Circuit diagram**

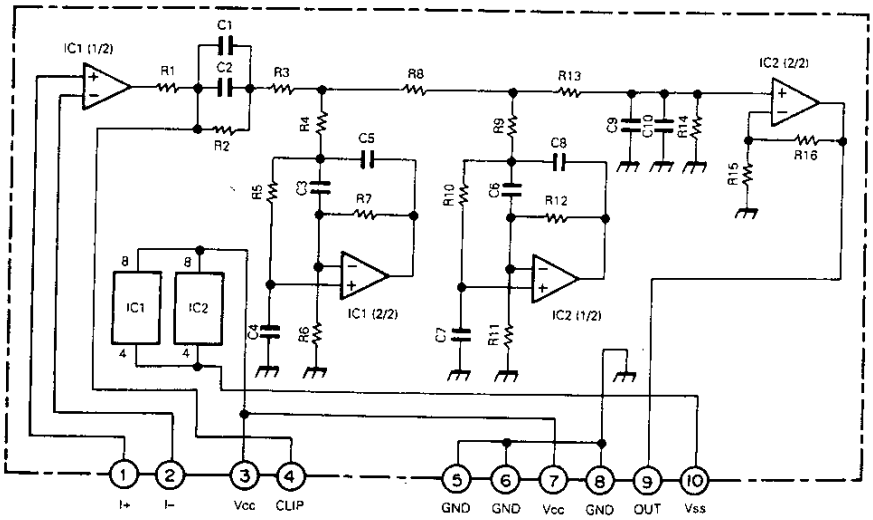

SEMICONDUCTOR DATA

I/O Port : MB89363B (Digital unit IC3, IC6, IC7)

- **Block diagram**

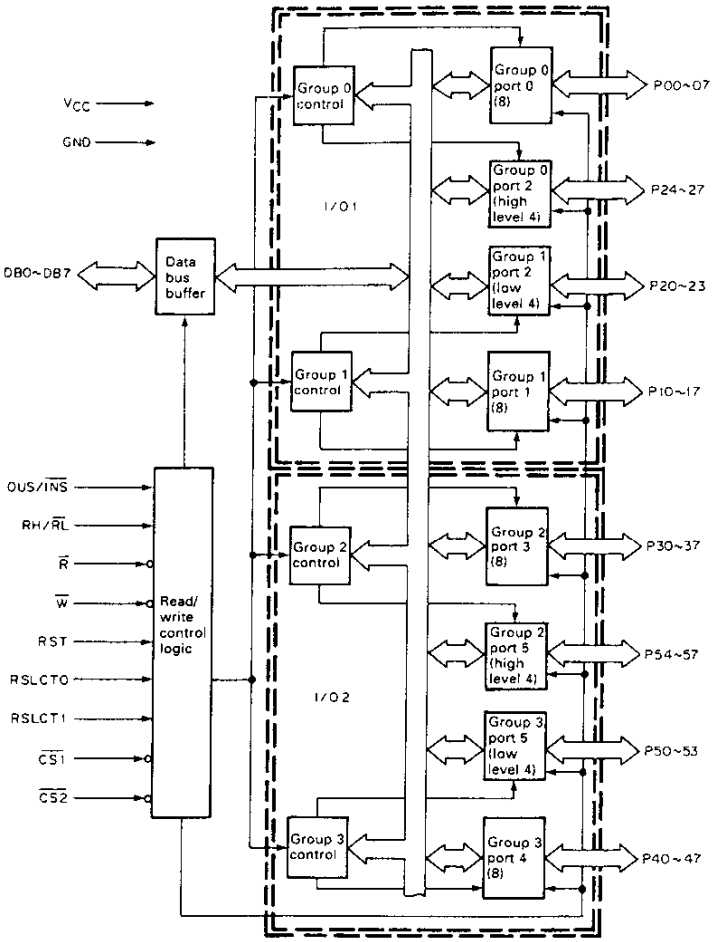

SEMICONDUCTOR DATA

- **Terminal function**

Pin No.	Pin name	Name	I/O	Function
1~4 77~80	P30~P37	Port 3 all bits	I/O	Eight-bit general-purpose input/output port. These terminals are included in group 2. Three operation modes can be selected by setting the control parameter by software.
5	$\overline{W}$	Write	I	The control parameter and port output data item can be written using a low-level signal. The parameter and port data can be distinguished and selected using the $\overline{CS1}$, $\overline{CS2}$, RSLCT0, and RSLCT1 signals.
6	RST	Initial setting reset	I	Input terminal. The MB89363B is set to the initial mode using a reset signal, and initial value 9B (hexadecimal) is automatically set for two control parameters. The initial mode indicates that all ports are in the input state of mode 0. All port terminals stay high in the initial mode. The active signal level is selected using an RH/$\overline{RL}$ signal. RH/$\overline{RL}$ = 0 : $\overline{RST}$ (active low) RH/$\overline{RL}$ = 1 : RST (active high)
9	RH/$\overline{RL}$	Reset active level selection	I	The RST terminal is set to active high or active low. RH/$\overline{RL}$ = 0 : $\overline{RST}$ (active low) RH/$\overline{RL}$ = 1 : RST (active high) The RH/$\overline{RL}$ terminal is fixed at either Vcc ot GND at all times.
11	OUS/$\overline{INS}$	Port 0 and 3 read value selection	I	This terminal indicates the output state of ports 0 and 3. It also selects whether the external terminal value of ports 0 and 3 is read directly or whether the output latch value of ports 0 and 3 is read directly when reading the value of ports 0 and 3. OUS/$\overline{INS}$ = 0 : The output latch value of ports 0 and 3 is read. OUS/$\overline{INS}$ = 1 : The external terminal value of ports 0 and 3 is read.
12~19	DB0~DB7	Bidirectional data bus	I/O	Eight-bit, bidirectional data bus. These terminals are used for data communication with the MPU. The bus signal making and breaking and data direction are controlled using the $\overline{CS1}$, $\overline{CS2}$, $\overline{R}$ and $\overline{W}$ signals.
20~23 25~28	P00~P07	Port 0 all bits	I/O	Eight-bit, general-purpose input/output port. These terminals are included in group 0. Three operation modes can be selected by setting the control parameter by software.
29 75	$\overline{CS1}$ $\overline{CS2}$	Device selection	I	When a low-level signal is input to this terminal, signals DB0 through DB7 are released and data communication with the MPU takes place. At that time, the control parameter is written, and data is written into or read from each port. $\overline{CS1}$ = 0 : I/O1 $\overline{CS2}$ = 0 : I/O2 Simultaneous selection of $\overline{CS1}$ = 0 and $\overline{CS2}$ = 0 is inhibited.
30, 74	GND	Ground terminal	I	0V.
31 32	RSLCT0 RSLCT1	Access selection	I	When data is sent to the MPU, the parameter and port are distinguished and selected using the $\overline{CS1}$, $\overline{CS2}$, RSLCT0, and RSLCT1 signals.
34~40 43	P20~P27	Port 2 all bits	I/O	These terminals are used as a general-purpose input/output port, handshaking control terminals, and status data bit input/output terminals in accordance with the operation functions and modes of groups 0 and 1.
44~51	P10~P17	Port 1 all bits	I/O	Eight-bit, general-purpose input/output port. These terminals are included in group 1. Two operation modes can be selected by setting the control parameter by software.
53	Vcc			+5V power.
54~61	P40~P47	Port 4 all bits	I/O	Eight-bit, general-purpose input/output port. These terminals are included in group 3. Two operation modes can be selected by setting the control parameter by software.
62 65~71	P50~P57	Port 5 all bits	I/O	These terminals are used as a general-purpose input/output port, handshaking control terminals, and status data bit input/output terminals.
76	$\overline{R}$	Read	I	Data from each port is read using a low-level signal. The port type is selected using the $\overline{CS1}$, $\overline{CS2}$, RSLCT0, and RSLCT1 signals.
7,8,10,24 33,41,42 52,63,64 72,73	NC	–	–	Connection to the NC terminal is inhibited.

SEMICONDUCTOR DATA

Switched Capacitor Filter : MF10CCWM (AF unit IC2)

- **Features**
  - The cut-off frequency stability varies depending on the external clock.
  - The cut-off and center frequencies of a filter can be set and altered using the external clock frequency.
  - 20-pin DIP package.
  - SO package is provided for surface installation.
  - Clock and center frequencies have a high precision ratio (fCLK/fO). (±0.6% : MF10AC, ±1.5% : MF10C)
  - Three independent low-pass, bandpass, and high-pass (or notch or all-pass) outputs.
  - The product of center frequency fO and Q (fO x Q) is 200kHz.
  - Input frequency is 20kHz (representative value is 30kHz).

- **Block diagram**

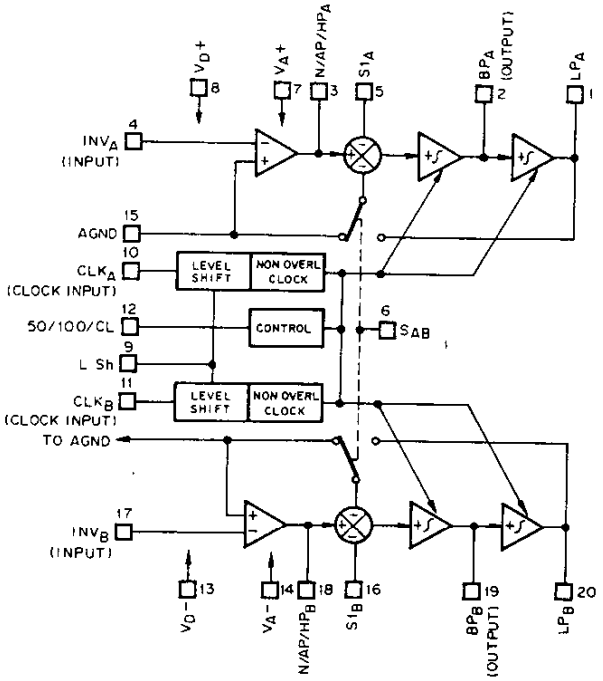

PLL (EXT STD) : MC14568BCP (CAR unit IC13)

- **Block diagram**

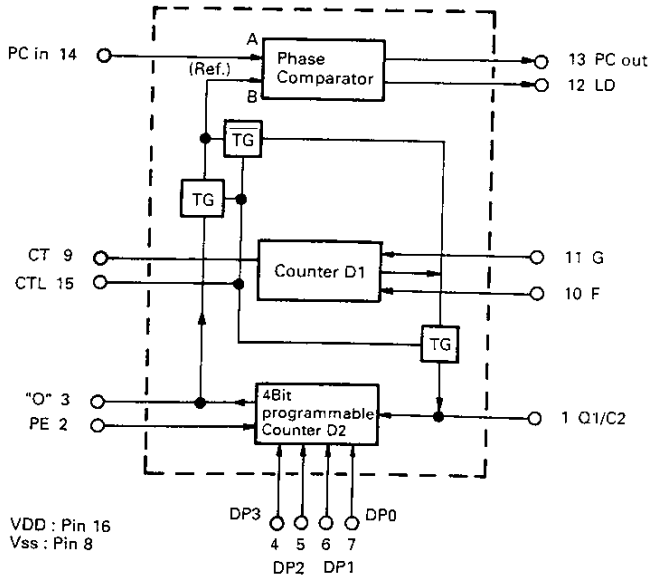

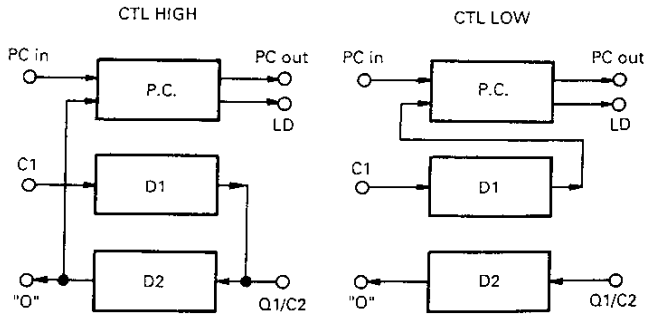

SEMICONDUCTOR DATA

Switching : MC74HC4052F (DSP unit IC3, IC4)

- Terminal connection

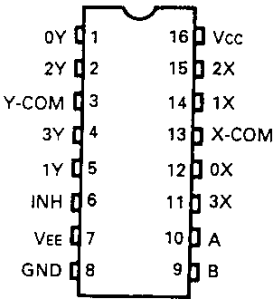

- Logic circuit diagram

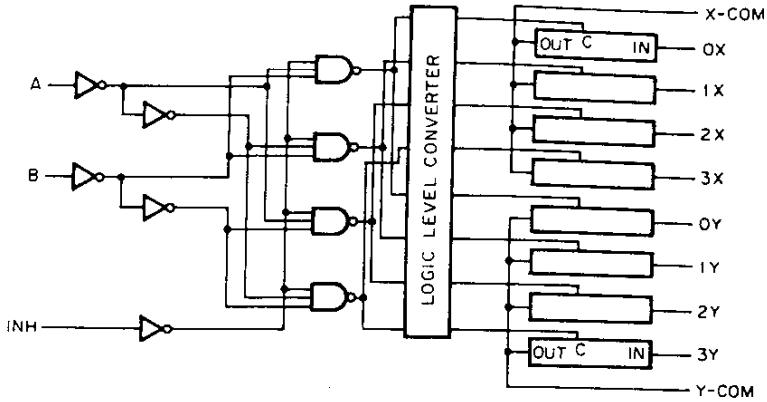

- **Truth table**

CONTROL INPUTS			"ON" CHANNEL
INHIBIT	B	A	
L	L	L	0X,0Y
L	L	H	1X,1Y
L	H	L	2X,2Y
L	H	H	3X,3Y
L	L	L	–
L	L	H	–
L	H	L	–
L	H	H	–
H	X	X	NONE

X : Do not care

Divider : TC74HC74AF (DSP unit IC13)
Latch : TC74HC74AF (DSP unit IC15)

- Logic circuit diagram

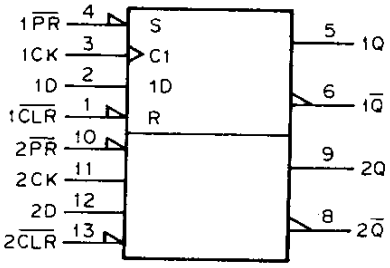

- **Truth table**

INPUTS				OUTPUTS		FUNCTION
CLR	PR	D	CK	Q	Q̄	
L	H	X	X	L	H	CLEAR
H	L	X	X	H	L	PRESET
L	L	X	X	H	H	–
H	H	L	↑	L	H	–
H	H	H	↑	H	L	–
H	H	X	↓	Qn	Q̄n	NO CHANGE

X : Do not care

SEMICONDUCTOR DATA

A/D Converter : PCM78AP (DSP unit IC12)

- **Block diagram**

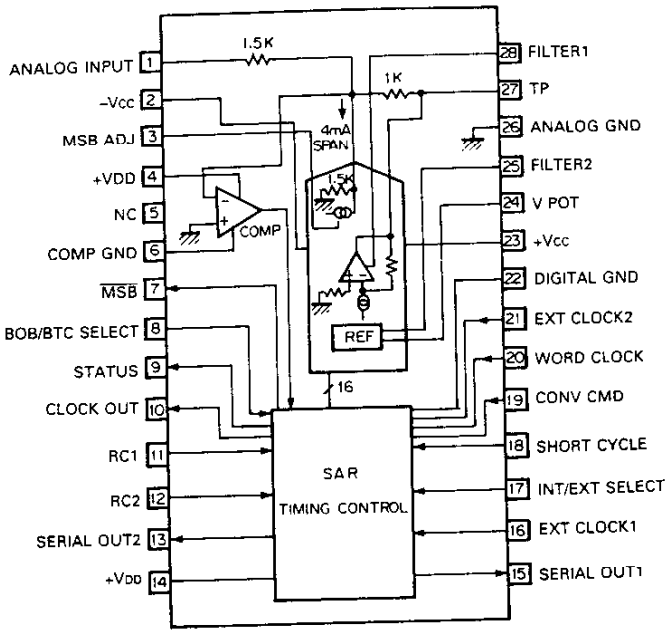

- **Terminal function**

Pin No.	Pin name	I/O	Function
1	ANALOG INPUT	I	A/D converter analog input. Input impedance 1.5kΩ (TYP).
2	-Vcc	–	Analog -Vcc.
3	MSB ADJ	I	MSB adjustment (MSB DLE compensation) input terminal.
4	+VDD	–	Comparator +VDD.
5	NC	–	
6	COMP GND	–	Comparator ground. Usually connected to digital common.
7	$\overline{\text{MSB}}$	O	$\overline{\text{MSB}}$ output terminal.
8	BOB/BTC SELECT	I	Output digital code selection terminal. "L" : BOB, "H" : BTC
9	STATUS	O	Status signal output terminal.
10	CLOCK OUT	O	Main clock output terminal for SAR operation.
11	RC1	–	Internal clock oscillation frequency setting terminal. Pulled up to +VDD by 10kΩ when an external clock is used.
12	RC2	–	Internal clock oscillation frequency setting terminal. Pulled up to +VDD by 10kΩ when an external clock is used.
13	SERIAL OUT2	O	Serial data output synchronized with EXT CLOCK2 signal.
14	+VDD	–	Digital +VDD.
15	SERIAL OUT1	O	Serial data output synchronized with internal clock or EXT CLOCK1.
16	EXT CLOCK1	I	External clock (EXT CLOCK1) input. Opened or pulled up when not used.
17	INT/EXT SELECT	I	Internal/external clock selection terminal. "L" : INT, "H" : EXT
18	SHORT CYCLE	I	Short cycle timing input terminal.
19	CONV CMD	I	Conversion command signal input terminal. Set low when not used.
20	WORD CLOCK	I	WORD CLOCK input terminal. Opened or pulled up when nor used.
21	EXT CLOCK2	I	External clock (EXT CLOCK2) input terminal. Opened or pulled up when not used.
22	DIGITAL GND	–	Digital ground.
23	+Vcc	–	Analog +Vcc.
24	V POT	O	MSB adjustment reference voltage output terminal.
25	FILTER2	–	Internal reference filter. A 3.3μF capacitor is connected to -Vcc.
26	ANALOG GND	–	Analog ground. A 2.2μF capacitor is connected to ANA GND.
27	TP	–	Test point for operation check.
28	FILTER1	–	Internal reference filter. A 3.3μF capacitor is connected to ANA GND.

SEMICONDUCTOR DATA

D/A Converter : PCM56P (DSP unit IC16)

- **Terminal connection**

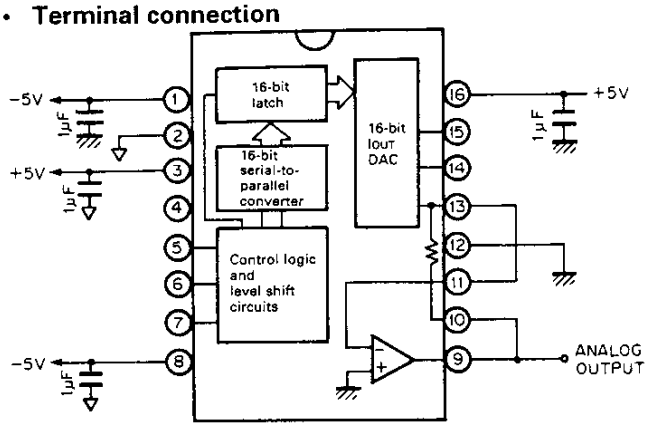

- **Terminal function**

Pin No.	Pin name	Function
1	-Vs	Analog negative power supply
2	LOG COM	Logic common
3	+VL	Logic positive power supply
4	NC	Not connected
5	CLK	Clock input
6	LE	Latch enable input
7	DATA	Serial data input
8	-VL	Logic negative power supply
9	VOUT	Voltage output
10	RF	Feedback resistor
11	SJ	Summing junction
12	ANA COM	Analog common
13	IOUT	Current output
14	MSB ADJ	MSB adjustment terminal
15	TRIM	MSB trim potentiometer terminal
16	+Vs	Analog positive power supply

Switching : MC74HC4053F (DSP unit IC7, IC17, IC20)

- **Terminal connection**

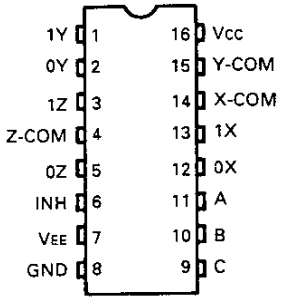

- **Logic circuit diagram**

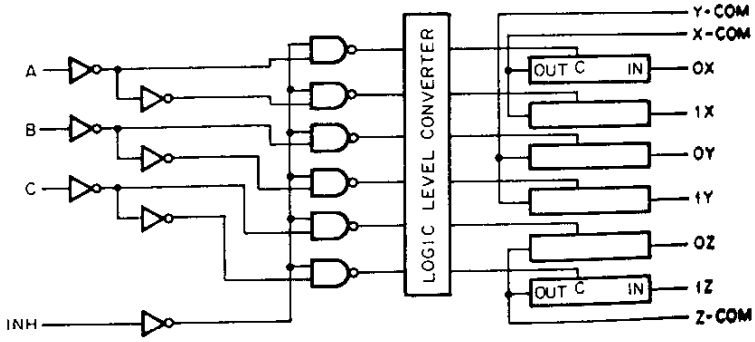

- **Truth table**

CONTROL INPUTS				"ON" CHANNEL
INHIBIT	C	B	A	
L	L	L	L	0X,0Y,0Z
L	L	L	H	1X,0Y,0Z
L	L	H	L	0X,1Y,0Z
L	L	H	H	1X,1Y,0Z
L	H	L	L	0X,0Y,1Z
L	H	L	H	1X,0Y,1Z
L	H	H	L	0X,1Y,1Z
L	H	H	H	1X,1Y,1Z
H	X	X	X	NONE

X : Do not care

PARTS LIST

CAPACITORS

CC 45 TH 1H 220 J
1 2 3 4 5 6

1 = Type ... ceramic, electrolytic, etc.
2 = Shape ... round, square, ect.
3 = Temp. coefficient
4 = Voltage rating
5 = Value
6 = Tolerance

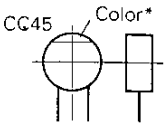

• Capacitor value

010 = 1pF
100 = 10pF
101 = 100pF
102 = 1000pF = 0.001μF
103 = 0.01μF

2 2 0 = 22pF
Multiplier
2nd number
1st number

• Temperature coefficient

1st Word	C	L	P	R	S	T	U
Color*	Black	Red	Orange	Yellow	Green	Blue	Violet
ppm/°C	0	−80	−150	−220	−330	−470	−750

2nd Word	G	H	J	K	L
ppm/°C	±30	±60	±120	±250	±500

Example : CC45TH = −470 ± 60ppm/°C

• Tolerance

Code	C	D	G	J	K	M	X	Z	P	No code
(%)	±0.25	±0.5	±2	±5	±10	±20	+40 −20	+80 −20	+100 −0	More than 10μF −10 ~ +50 Less than 4.7μF −10 ~ +75

Less than 10pF

Code	B	C	D	F	G
(pF)	±0.1	±0.25	±0.5	±1	±2

• Voltage rating

1st word \ 2nd word	A	B	C	D	E	F	G	H	J	K	V
0	1.0	1.25	1.6	2.0	2.5	3.15	4.0	5.0	6.3	8.0	–
1	10	12.5	16	20	25	31.5	40	50	63	80	35
2	100	125	160	200	250	315	400	500	630	800	–
3	1000	1250	1600	2000	2500	3150	4000	5000	6300	8000	–

• Chip capacitors (Refer to the table above except dimension)

(EX) CC 73 F SL 1H 000 J
1 2 3 4 5 6 7
(Chip) (CH, RH, UJ, SL)

(EX) CK 73 F F 1H 000 Z
1 2 3 4 5 6 7
(Chip) (B, F)

RESISTORS

• Chip resistor (Carbon)

(EX) RD 73 F B 2B 000 J
1 2 3 4 5 6 7
(Chip) (B,F)

• Carbon resistor (Normal type)

(EX) RD 14 B B 2C 000 J
1 2 3 4 5 6 7

1 = Type ... ceramic, electrolytic, etc.
2 = Shape ... round, square, ect.
3 = Dimension
4 = Temp. coefficient
5 = Voltage rating
6 = Value
7 = Tolerance

Dimension

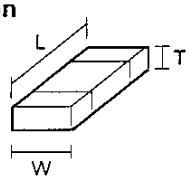

• Dimension (Chip capacitor)

Dimension code	L	W	T
Empty	5.6 ± 0.5	5.0 ± 0.5	Less than 2.0
E	3.2 ± 0.2	1.6 ± 0.2	Less than 1.25
F	2.0 ± 0.3	1.25 ± 0.2	Less than 1.25

• Dimension (Chip resistor)

Dimension code	L	W	T	Wattage
E	3.2 ± 0.2	1.6 ± 0.2	0.57	2B
F	2.0 ± 0.3	1.25 ± 0.2	0.45	2A

Rating wattage

Code	Wattage	Code	Wattage	Code	Wattage
2A	1/10W	2E	1/4W	3A	1W
2B	1/8W	2H	1/2W	3D	2W
2C	1/6W				

TS-950SDX

PARTS LIST

* New Parts
Parts without Parts No. are not supplied.
Les articles non mentionnes dans le Parts No. ne sont pas fournis.
Teile ohne Parts No. werden nicht gellefert.

TS-950SDX

Ref. No. 参照番号	Address 位置	New Parts 新	Parts No. 部品番号	Description 部品名／規格	Destination 仕向	Remarks 備考
			TS-950SDX			
1	3A		A01-1074-11	METALLIC CABINET(BOTTOM)		
2	1B	*	A01-2053-01	METALLIC CABINET(TOP)	KPEE2	
2	1B	*	A01-2053-01	METALLIC CABINET(TOP)	E3	
2	1B	*	A01-2054-01	METALLIC CABINET(TOP)	XMT	
4	2D		A22-0763-02	SUB PANEL		
5	2D	*	A62-0169-02	PANEL ASSY		
5	2D	*	A62-0170-02	PANEL		
9	2G	*	A82-0009-12	REAR PANEL		
10	1K		B04-0412-04	MESH PLATE		
11	2D		B10-1119-03	FRONT GLASS		
12	2C		B11-0466-04	FILTER		
13	1A		B41-0338-04	CAUTION LABEL(LIGHTING MARKING	KP	
14	1I		B41-0525-04	CAUTION LABEL(FUSE REPLACEMENT	KP	
15	2G		B42-3301-04	LABEL(LA STANDARD)	K	
17	2G		B42-3343-04	LABEL(S/NO)		
18	1A		B42-3374-04	LABEL(AC 120/220)	M	
18	1A		B42-3376-04	LABEL(AC 120/240)	XT	
19	2G		B42-3395-04	LABEL(THIS DEVICE)	K	
-	-	*	B59-0456-00	LIST OF COMMAND KEY		
20	1O	*	B42-3510-04	LABEL(ACSY,REAR)		
22	2C		B43-1098-04	BADGE		
-	-		B44-2163-04	LABEL(UPC CORD)		
24	1P		B46-0419-00	WARRNTY CARD	EE2E3	
24	1P		B46-0422-00	WARRNTY CARD	P	
24	1P	*	B46-0440-00	WARRNTY CARD	K	
30	1P	*	B62-0229-00	INSTRUCTION MANUAL(ENGLISH)		
31	1P	*	B62-0230-00	INSTRUCTION MANUAL(GERMAN/ITAL	E	
32	1P	*	B62-0231-00	INSTRUCTION MANUAL(SPA/FRE/DUT	PE2E3M	
33	1P	*	B62-0233-00	INSTRUCTION MANUAL(COMMAND EXP		
34	1P	*	B62-0264-00	INSTRUCTION MANUAL(CIRCUIT DIA		
35	2G	*	B72-0369-04	MODEL NAME PLATE(AC 120V)	KP	
35	2G	*	B72-0370-04	MODEL NAME PLATE(AC 120/220V)	M	
35	2G	*	B72-0371-04	MODEL NAME PLATE(AC 230V)	EE2E3	
35	2G	*	B72-0372-04	MODEL NAME PLATE(AC 120/240V)	XT	
38	2K		E04-0167-05	RF COAXIAL CABLE RECEPTACLE		
39	1O		E07-0751-05	7P DIN PLUG(ACSY)		
40	1O		E07-1351-05	13P ROUND PLUG(ACSY)		
41	3K		E13-0101-05	PIN JACK		
42	3K		E23-0616-14	TERMINAL		
-	-		E29-0114-05	CAP	XT	
45	3I		E30-0974-05	AC POWER CORD	KM	
45	3I		E30-2125-05	AC POWER CORD	P	
45	3I		E30-2153-15	AC POWER CORD	EE2E3T	
45	3I		E30-2159-15	AC POWER CORD	X	
46	2G		E30-2176-05	OUTSIDE CONNECTING WIRE		
-	-		E31-3221-25	CONNECTING WIRE(MIF)		
-	-		E31-6067-05	CONNECTING WIRE(SIG-CONT)14P		
-	-		E31-6068-05	CONNECTING WIRE(SIG-AF)14P		
-	-		E31-6069-05	CONNECTING WIRE(SIG-DIG,AF-DIG		
-	-		E31-6070-05	CONNECTING WIRE(DIS-SWA)18P		
-	-		E31-6071-05	CONNECTING WIRE(DIG-DIG)10P		
-	-		E31-6072-05	CONNECTING WIRE(PLL-DIG)24P		
-	-		E31-6073-05	CONNECTING WIRE(CONT-DIG)16P		
-	-		E31-6074-05	CONNECTING WIRE(SWA-DIG)20P		

L:Scandinavia K:USA P:Canada
Y:PX(Far East, Hawaii) T:England E:Europe
Y:AAFES(Europe) X:Australia M:Other Areas

⚠ indicates safety critical components.

PARTS LIST

* New Parts
Parts without Parts No. are not supplied.
Les articles non mentionnes dans le Parts No. ne sont pas fournis.
Teile ohne Parts No. werden nicht geliefert.

TS-950SDX

Ref. No. 参照番号	Address 位置	New Parts 新	Parts No. 部品番号	Description 部品名／規格	Destination 仕向	Remarks 備考
-	-	*	E31-6128-05	INSIDE CONNECTING WIRE	XT	
-	-	*	E31-6129-05	INSIDE CONNECTING WIRE	XMT	
-	-	*	E33-1962-15	FINISHED WIRE SET		
-	-	*	E33-1963-15	FINISHED WIRE SET		
61	2I	*	F01-0968-23	HEAT SINK		
65	1I		F05-3121-05	FUSE(SEMKO 3.15A)	XEE2	
65	1I		F05-3121-05	FUSE(SEMKO 3.15A)	E3T	
66	1I		F05-3523-05	FUSE(3.5A)	M	
67	1I		F05-6021-05	FUSE(6A,ACSY)	M	
68	1I		F05-6027-05	FUSE(UL 6A)	KP	
69	1G		F07-0887-04	COVER(REAR PANEL FAN SIDE)		
70	3H,3J		F09-0423-15	FAN		
72	1K		F11-1139-33	SHIELDING COVER(FINAL)		
73	3G	*	F11-1153-13	SHIELDING COVER(RF)		
74	1E		F20-1022-03	INSULATING BOARD(SW)		
75	1I		F20-1036-04	INSULATING BOARD(AVR)		
76	3H	*	F20-1043-04	INSULATING BOARD(CHASSIS)		
-	-		G02-0505-05	LEAF SPRING		
78	1I		G02-0574-04	FLAT SPRING		
79	1I, 2F		G02-0576-04	FLAT SPRING		
80	2G		G02-0717-04	FLAT SPRING(AT)		
81	1A		G10-0656-04	NON-WOVEN FABRIC(SP)		
84	2G		G10-0662-04	NON-WOVEN FABRIC		
85	1E		G10-0687-14	NON-WOVEN FABRIC(FILTER)		
-	-		G11-0609-04	CUSHION(MIC)		
-	-		G13-0855-04	CUSHION(MIC)		
88	2C		G13-0917-04	CUSHION(KNOB)		
89	2D		G13-0918-14	CUSHION(KNOB)		
90	1A		G13-0919-04	CUSHION(SP)		
92	3H		G13-0927-04	CUSHION(ELECTRO CAP)		
93	1B		G13-0943-14	CUCHION(TRANS FORMER)		
94	3G	*	G13-0962-04	CUCHION(RF SHIELD COVER)		
95	3F	*	G13-0974-04	CUSHION(FLAT CABLE)		
96	2H	*	G16-0530-04	SHEET(SP)		
97	2O	*	H10-2666-11	POLYSTYRENE FOAMED FIXTURE(F)		
98	2P	*	H10-2667-31	POLYSTYRENE FOAMED FIXTURE(R)		
99	2O		H12-1419-04	PACKING FIXTURE(SIDE)		
100	2P		H20-1434-03	PROTECTION COVER		
102	1O		H25-0105-04	PROTECTION BAG(MIC)		
103	1O		H25-0117-04	PROTECTION BAG(ACSY)		
104	1P	*	H25-0751-04	PROTECTION BAG(INSTRUCTION M.)		
105	1O		H25-0761-04	PROTECTION(BAG(RM-1,ACSY)		
106	1O		H52-0239-04	ITEM CARTON BOX(RM-1)		
107	2P	*	H52-0248-04	ITEM CARTON BOX(TS-950SDX)		
108	3P	*	H62-0218-04	OUTER PACKING CASE(TS-950SDX)		
110	3B		J02-0049-14	FOOT(REAR)		
111	3A		J02-0424-04	FOOT(FRONT)		
112	1A,2A		J02-0426-05	FOOT(SIDE)		
113	3A	*	J02-0464-03	FOOT(FRONT)		
114	2H		J19-1382-05	LEAD HOLDER(ELECTRO CAP SIDE)		
115	3F	*	J21-2664-14	MOUNTING HARDWARE(CONT B/3)		
117	2J		J21-4272-13	MOUNTING HARDWARE(HEAT SINK)		
118	2H		J21-4273-04	MOUNTING HARDWARE(FAN)		

L:Scandinavia K:USA P:Canada
Y:PX(Far East, Hawaii) T:England E:Europe
Y:AAFES(Europe) X:Australia M:Other Areas

⚠ indicates safety critical components.

PARTS LIST

* New Parts
Parts without Parts No. are not supplied.
Les articles non mentionnes dans le Parts No. ne sont pas fournis.
Teile ohne Parts No. werden nicht geliefert.

TS-950SDX

Ref. No. 参照番号	Address 位置	New Parts 新	Parts No. 部品番号	Description 部品名／規格	Destination 仕向	Remarks 備考
119	2H		J21-4274-04	MOUNTING HARDWARE(SP)		
120	2H		J21-4275-04	MOUNTING HARDWARE(ELECTRO CAP)		
121	1I		J21-4276-04	MOUNTING HARDWARE(AVR)		
122	2K		J21-4277-04	MOUNTING HARDWARE(REAR PANEL)		
123	3J	*	J21-4384-03	MOUNTING HARDWARE(TRANSIT)		
124	1D		J31-0141-04	COLLAR(MIC)		
125	2I		J32-0909-04	STUD(AVR)		
126	2I		J32-0910-04	STUD(AVR)		
130	3I		J42-0083-05	BUSHING(AC)	KM	
130	3I		J42-0085-05	BUSHING(AC)	XPEE2	
130	3I		J42-0085-05	BUSHING(AC)	E3T	
131	2G		J50-0401-05	HINGE		
132	2F		J61-0033-05	WIRE BAND(SUB TRANSFORMER)		
133	2F		J61-0039-05	WIRE BAND(PLL)		
-	-		J61-0307-05	WIRE BAND		
140	1B		K01-0416-05	HANDLE		
141	2C	*	K21-0792-02	KNOB(MIN)		
142	2C		K23-0793-04	KNOB(NOTCH)		
143	2C		K23-0794-04	KNOB(AGC)		
144	2C		K29-0761-04	KNOB(RING)		
145	2C		K29-3172-04	KNOB(M.CH)		
146	2C		K29-3173-04	KNOB(METER)		
147	2D	*	K29-3174-23	KNOB(0)		
148	2D	*	K29-3175-23	KNOB(1)		
149	2D	*	K29-3176-23	KNOB(2)		
150	2D	*	K29-3177-23	KNOB(3)		
152	2D	*	K29-3178-23	KNOB(4)		
153	2D	*	K29-3179-23	KNOB(5)		
154	2D	*	K29-3180-23	KNOB(6)		
155	2D	*	K29-3181-23	KNOB(7)		
156	2D	*	K29-3182-23	KNOB(8)		
157	2D	*	K29-3183-23	KNOB(9		
158	2D	*	K29-3184-23	KNOB(CLR)		
159	2D	*	K29-3185-23	KNOB(ENT)		
160	2D	*	K29-3186-23	KNOB(TF-W)		
162	2D	*	K29-3187-23	KNOB(SUB)		
163	2D	*	K29-3189-23	KNOB(TF-SET)		
164	2C	*	K29-3191-23	KNOB(VOICE)		
165	2C	*	K29-3192-23	KNOB(8.83)		
166	2C	*	K29-3193-23	KNOB(455)		
167	2C		K29-3194-03	KNOB(LSB)		
168	2C		K29-3195-03	KNOB(USB)		
169	2C		K29-3196-03	KNOB(CW)		
170	2C		K29-3197-03	KNOB(FSK)		
171	2C		K29-3198-03	KNOB(AM)		
172	2C		K29-3199-03	KNOB(FM)		
173	2D		K29-3200-03	KNOB(ROUND MARK)		
175	2D		K29-4502-03	KNOB(A=B)		
176	2D		K29-4505-04	KNOB(MIN)		
177	2D		K29-4506-04	KNOB(M-VFO)		
178	2D		K29-4507-04	KNOB(SCAN)		
179	2D		K29-4508-04	KNOB(DOWN)		
180	2D		K29-4509-04	KNOB(UP)		
181	2D		K29-4510-04	KNOB(VOX)		
182	1D		K29-4511-04	KNOB(POWER)		

L:Scandinavia K:USA P:Canada
Y:PX(Far East, Hawaii) T:England E:Europe
Y:AAFES(Europe) X:Australia M:Other Areas

⚠ indicates safety critical components.

PARTS LIST

× New Parts
Parts without Parts No. are not supplied.
Les articles non mentionnes dans le Parts No. ne sont pas fournis.
Teile ohne Parts No. werden nicht geliefert.

TS-950SDX

Ref. No. 参照番号	Address 位置	New Parts 新	Parts No. 部品番号	Description 部品名／規格	Destination 仕向	Remarks 備考
183	1D		K29-4512-04	KNOB(VOX,FULL)		
184	1D		K29-4513-04	KNOB(PROC)		
185	2C		K29-4514-04	KNOB(SQL)		
186	2C		K29-4515-04	KNOB(MAIN,MIC)		
187	2C		K29-4516-04	KNOB(SUB,PWR)		
188	1D,1E		K29-4518-04	KNOB(SEND,RIT)		
189	2D	*	K29-4763-13	KNOB(BUTTON) (MENU)		
190	2D	*	K29-4764-13	KNOB(BUTTON) (M/S)		
191	2D	*	K29-4765-03	KNOB(BUTTON) (RX-SUB)		
192	2C	*	K29-4791-03	KNOB(BUTTON) (MR)		
193	2C	*	K29-4792-03	KNOB(BUTTON) (M.IN)		
195	2I	*	L01-8421-35	POWER TRANSFORMER(MAIN 120V)	KP	
195	2I	*	L01-8426-35	POWER TRANSFORMER(MAIN 120-100, 120V)	XMT	
195	2I	*	L07-1025-05	POWER TRANSFORMER(MAIN 230V)	EE2E3	
196	3H		L01-8431-05	POWER TRANSFORMER(SUB 120V)	KP	
196	3H		L01-8436-05	POWER TRANSFORMER(SUB 120-100, 120V)	XMT	
196	3H	*	L07-1026-05	POWER TRANSFORMER(SUB 230V)	EE2E3	
-	-		L79-0847-05	FILTER ASSY(YK-88C-1)		
A	2K		N09-0682-04	HEX VOLT		
B	-		N09-2051-05	SCREW	X	
C	2K		N14-0115-05	NUT		
D	2K		N14-0509-05	NUT		
E	2K		N15-1040-46	FLAT WASHER		
F	2C		N19-0637-04	FLAT WASHER(PANEL)		
G	1D,1G		N32-2606-46	FLAT HEAD MACHIN SCREW		
H	1H		N32-3006-46	FLAT HEAD MACHIN SCREW		
I	3A,1B		N33-4008-41	OVAL HEAD MACHIN SCREW		
J	1E		N35-2604-46	BINDING HEAD MACHINE SCREW		
K			N35-2606-46	BINDING HEAD MACHINE SCREW	XMT	
L	1I		N35-2608-46	BINDING HEAD MACHINE SCREW		
M	1I		N35-3006-46	BINDING HEAD MACHINE SCREW		
N	-		N35-3010-46	BINDING HEAD MACHINE SCREW		
P	1I		N35-4018-46	BINDING HEAD MACHINE SCREW		
Q	3B,3J		N87-2606-46	BRAZIER HEAD TAPTITE SCREW		
R	1K		N87-3006-46	BRAZIER HEAD TAPTITE SCREW		
S	1K		N87-3008-46	BRAZIER HEAD TAPTITE SCREW		
T	2K		N87-3010-46	BRAZIER HEAD TAPTITE SCREW		
U	1I,3H		N87-3014-46	BRAZIER HEAD TAPTITE SCREW		
V	3A		N87-4010-46	BRAZIER HEAD TAPTITE SCREW		
W	1M		N88-3006-46	FLAT HEAD TAPTITE SCREW		
X	1G,2K		N89-3006-45	BINDING HEAD TAPTITE SCREW		
Y	-		N89-3008-45	BINDING HEAD TAPTITE SCREW		
Z	2C		N90-3008-46	TP HEAD MACHIN SCREW		
AA	2I		N90-4004-46	TP HEAD MACHIN SCREW		
231	1H		S31-2418-05	SLIDE SWITCH	XMT	
232	1D		S40-2460-05	PUSH SWITCH		
-	-		S50-1406-05	SENSITIVE SWITCH(MIC)		
SP	1H		T07-0221-05	LOUDSPEAKER(FULLRANGE)		
236	2O		T91-0352-15	MICROPHONE(ACSY)		
-	-		DSA301LA	SURGE ABSOBER(ANT)		
240	1E		W02-0855-05	ENCODER(MAIN)		

L:Scandinavia K:USA P:Canada
Y:PX(Far East, Hawaii) T:England E:Europe
Y:AAFES(Europe) X:Australia M:Other Areas

⚠ indicates safety critical components.

TS-950SDX

PARTS LIST

* New Parts
Parts without Parts No. are not supplied.
Les articles non mentionnes dans le Parts No. ne sont pas fournis.
Teile ohne Parts No. werden nicht geliefert.

TS-950SDX
SWITCH UNIT (A) (X41-3240-00)

Ref. No. 参照番号	Address 位置	New Parts 新	Parts No. 部品番号	Description 部品名／規格	Destination 仕向	Remarks 備考
241	1E		W02-0857-15	ENCODER(SUB)		
251	1D,1E	*	X41-3240-00	SWITCH UNIT(A)		
252	1D,1E	*	X41-3250-00	SWITCH UNIT(B)		
253	2H,1I		X43-3070-01	AVR UNIT		
254	3G	*	X44-3140-00	RF UNIT		
255	2J	*	X45-3450-00	FINAL UNIT		
256	3F	*	X46-3130-11	DIGITAL UNIT	KP	
256	3F	*	X46-3130-21	DIGITAL UNIT	M	
256	3F	*	X46-3130-71	DIGITAL NUIT	X	
256	3F	*	X46-3132-71	DIGITAL UNIT	EE3T	
256	3F	*	X46-3132-72	DIGITAL UNIT	E2	
257	3G	*	X48-3100-00	IF UNIT		
258	3F	*	X49-3050-00	AF UNIT		
259	2G	*	X50-3170-00	PLL UNIT		
260	1G	*	X50-3180-00	CAR UNIT		
261	-		X51-3050-00	FILTER UNIT(YG-455C-1)		
262	2K	*	X51-3060-12	FILTER UNIT	KXPE3	
262	2K	*	X51-3060-12	FILTER UNIT	MT	
262	2K	*	X51-3062-71	FILTER UNIT	E2	
263	-		X51-3070-00	FILTER UNIT(YG-455S-1)		
264	1N	*	X53-3340-01	AT UNIT		
265	2F,3F	*	X53-3380-00	CONTROL UNIT		
266	2B	*	X53-3390-00	DSP UNIT		
267	1E	*	X54-3080-01	DISPLAY UNIT		
268	3F	*	X57-4130-00	SIGNAL UNIT		
269	1O		X60-3240-00	COMPOUND ASSY UNIT(RM-1,ACSY)		
SWITCH UNIT (A) (X41-3240-00)						
C1 -4			CK73FB1H102K	CHIP C 1000PF K		
C5			CE04EW1C470M	ELECTRO 47UF 16WV		
C7			CE04EW1C330M	ELECTRO 33UF 16WV		
C8 -10			CK73FB1H102K	CHIP C 1000PF K		
C11			CE04EW1H100M	ELECTRO 10UF 50WV		
C25			CC73FSL1H101J	CHIP C 100PF J		
C29			CE04EW1C330M	ELECTRO 33UF 16WV		
C30			CK73FF1E104Z	CHIP C 0.1UF Z		
C31			CK73FB1H103K	CHIP C 0.010UF K		
C32 -34			CC73FSL1H101J	CHIP C 100PF J		
C35 ,36			CK73FB1H103K	CHIP C 0.010UF K		
C37			CC73FSL1H101J	CHIP C 100PF J		
C101,102			CK73FB1H103K	CHIP C 0.010UF K		
			E23-0623-04	TERMINAL		
CN1			E40-3239-05	PIN CONNECTOR FOR INSIDE(4P)		
CN2			E40-5135-05	PIN CONNECTOR FOR INSIDE(20P)		
CN3			E40-3238-05	PIN CONNECTOR FOR INSIDE(3P)		
CN4			E40-3240-05	PIN CONNECTOR FOR INSIDE(5P)		
CN5			E40-3237-05	PIN CONNECTOR FOR INSIDE(2P)		
CN6			E40-5133-05	PIN CONNECTOR FOR INSIDE(18P)		
CN7			E40-3238-05	PIN CONNECTOR FOR INSIDE(3P)		
CN8			E23-0401-05	TERMINAL		
CN9			E40-3237-05	PIN CONNECTOR FOR INSIDE(2P)		
CN10			E40-3239-05	PIN CONNECTOR FOR INSIDE(4P)		
CN11			E40-3238-05	PIN CONNECTOR FOR INSIDE(3P)		

L:Scandinavia K:USA P:Canada
Y:PX(Far East, Hawaii) T:England E:Europe
Y:AAFES(Europe) X:Australia M:Other Areas

⚠ indicates safety critical components.

PARTS LIST

* New Parts
Parts without Parts No. are not supplied.
Les articles non mentionnes dans le Parts No. ne sont pas fournis.
Teile ohne Parts No. werden nicht geliefert.

SWITCH UNIT (A) (X41-3240-00)

Ref. No. 参照番号	Address 位置	New Parts 新	Parts No. 部品番号	Description 部品名／規格	Destination 仕向	Remarks 備考
CN12			E40-3299-05	PIN CONNECTOR FOR INSIDE(2P)		
CN13			E40-3238-05	PIN CONNECTOR FOR INSIDE(3P)		
CN14			E40-3306-05	PIN CONNECTOR FOR INSIDE(9P)		
CN15			E40-3240-05	PIN CONNECTOR FOR INSIDE(5P)		
CN16			E40-3304-05	PIN CONNECTOR FOR INSIDE(7P)		
CN17			E40-3302-05	PIN CONNECTOR FOR INSIDE(5P)		
CN18			E40-3304-05	PIN CONNECTOR FOR INSIDE(7P)		
CN19			E40-3299-05	PIN CONNECTOR FOR INSIDE(2P)		
CN20			E40-3303-05	PIN CONNECTOR FOR INSIDE(6P)		
CN21			E23-0401-05	TERMINAL		
CN22			E40-3239-05	PIN CONNECTOR FOR INSIDE(4P)		
CN23			E40-3238-05	PIN CONNECTOR FOR INSIDE(3P)		
CN24			E23-0401-05	TERMINAL		
CN25			E40-3243-05	PIN CONNECTOR FOR INSIDE(8P)		
CN26			E40-3239-05	PIN CONNECTOR FOR INSIDE(4P)		
CN27			E40-3241-05	PIN CONNECTOR FOR INSIDE(6P)		
CN28			E40-3237-05	PIN CONNECTOR FOR INSIDE(2P)		
CN33,34			E23-0401-05	TERMINAL		
CN101			E40-3243-05	PIN CONNECTOR FOR INSIDE(8P)		
CN102			E40-5182-05	PIN CONNECTOR FOR INSIDE(5P)		
CN103			E40-5185-05	PIN CONNECTOR FOR INSIDE(8P)		
CN104			E40-5187-05	PIN CONNECTOR FOR INSIDE(10P)		
CN105			E40-5069-05	PIN CONNECTOR FOR INSIDE(12P)		
CN106			E40-5068-05	PIN CONNECTOR FOR INSIDE(11P)		
CN107			E40-3243-05	PIN CONNECTOR FOR INSIDE(8P)		
CN108			E40-3239-05	PIN CONNECTOR FOR INSIDE(4P)		
CN109			E40-3238-05	PIN CONNECTOR FOR INSIDE(3P)		
CN110			E40-3237-05	PIN CONNECTOR FOR INSIDE(2P)		
CN111			E40-3238-05	PIN CONNECTOR FOR INSIDE(3P)		
CN112			E40-3242-05	PIN CONNECTOR FOR INSIDE(7P)		
J1			E06-0858-15	CYLINDRICAL RECEPTACLE		
W1 -4		*	E33-1896-15	FINISHED WIRE SET(1P,7P,2P,6P		
D8 ,9			LN01301C(Q)	DIODE(AIP)		
D10			LN01401C	DIODE(AT TUNE)		
D11			LN01201C	DIODE(ON AIR)		
L6			L40-1011-14	SMALL FIXED INDUCTOR(100UH)		
L101			L40-2211-48	SMALL FIXED INDUCTOR(220UH)		
L102			L40-1001-48	SMALL FIXED INDUCTOR(10UH)		
R1 ,2			RK73FB2A122J	CHIP R 1.2K J 1/10W		
R3			RK73FB2A182J	CHIP R 1.8K J 1/10W		
R4			RK73FB2A331J	CHIP R 330 J 1/10W		
R5 -18			RK73FB2A181J	CHIP R 180 J 1/10W		
R19			RK73FB2A333J	CHIP R 33K J 1/10W		
R20			RK73FB2A683J	CHIP R 68K J 1/10W		
R21			RK73FB2A100J	CHIP R 10 J 1/10W		
R22			RK73FB2A103J	CHIP R 10K J 1/10W		
R26			RK73FB2A182J	CHIP R 1.8K J 1/10W		
R27			RK73FB2A472J	CHIP R 4.7K J 1/10W		
R28			RK73FB2A101J	CHIP R 100 J 1/10W		
R29			RK73FB2A182J	CHIP R 1.8K J 1/10W		
R30			RK73FB2A472J	CHIP R 4.7K J 1/10W		
R31			RK73FB2A101J	CHIP R 100 J 1/10W		
R32			RK73FB2A182J	CHIP R 1.8K J 1/10W		

L:Scandinavia K:USA P:Canada
Y:PX(Far East, Hawaii) T:England E:Europe
Y:AAFES(Europe) X:Australia M:Other Areas

⚠ indicates safety critical components.

TS-950SDX

PARTS LIST

* New Parts
Parts without Parts No. are not supplied.
Les articles non mentionnes dans le Parts No. ne sont pas fournis.
Teile ohne Parts No. werden nicht geliefert.

SWITCH UNIT (A) (X41-3240-00)

Ref. No. 参照番号	Address 位置	New Parts 新	Parts No. 部品番号	Description 部品名／規格	Destination 仕向	Remarks 備考
R34			RK73FB2A101J	CHIP R 100 J 1/10W		
R35			RK73FB2A182J	CHIP R 1.8K J 1/10W		
R36			RK73FB2A331J	CHIP R 330 J 1/10W		
R37			RK73FB2A101J	CHIP R 100 J 1/10W		
R39			RK73FB2A471J	CHIP R 470 J 1/10W		
R44			RK73FB2A101J	CHIP R 100 J 1/10W		
R45			RK73FB2A472J	CHIP R 4.7K J 1/10W		
R46			RK73FB2A102J	CHIP R 1K J 1/10W		
R101			RK73FB2A104J	CHIP R 100K J 1/10W		
R102			RK73FB2A183J	CHIP R 18K J 1/10W		
R103			RK73FB2A472J	CHIP R 4.7K J 1/10W		
R104			RK73FB2A103J	CHIP R 10K J 1/10W		
R105			RK73FB2A184J	CHIP R 180K J 1/10W		
R106,107			RK73FB2A103J	CHIP R 10K J 1/10W		
R108			RK73FB2A104J	CHIP R 100K J 1/10W		
R109			RK73FB2A683J	CHIP R 68K J 1/10W		
VR1			R19-3423-05	POTENTIO M. 10K-A		
VR2			R24-3406-05	POTENTIO M. 10K-B		
VR3		*	R05-0405-05	POTENTIO M. 10K-B		
VR4			R05-3449-05	TRIM POT. 10K-A		
VR5			R10-6401-05	TRIM POT. 250K-B		
VR6		*	R05-0405-05	POTENTIO M. 10K-B		
VR7			R05-3449-05	TRIM POT. 10K-A		
VR12			R24-1401-05	POTENTIO M. 1K-B		
S1 -4			S50-1412-05	MICRO SWITCH(SWR)		
S5 ,6			S40-1428-05	PUSH SWITCH(VOICE)		
S7 ,8			S40-1429-05	PUSH SWITCH(LSB)		
S9			S40-1430-05	PUSH SWITCH(AM)		
S10 ,11			S40-1428-05	PUSH SWITCH(VOICE)		
S12 ,13			S40-1429-05	PUSH SWITCH(LSB)		
S14			S40-1430-05	PUSH SWITCH(AM)		
S15 ,16			S40-1428-05	PUSH SWITCH(VOICE)		
S17 -19			S40-1429-05	PUSH SWITCH(LSB)		
S20 -22			S40-1428-05	PUSH SWITCH(VOICE)		
S23 -25			S40-1429-05	PUSH SWITCH(LSB)		
S26 -28			S40-1428-05	PUSH SWITCH(VOICE)		
S29 -31			S40-1429-05	PUSH SWITCH(LSB)		
S32 -34			S40-1428-05	PUSH SWITCH(VOICE)		
S35 -38			S40-1429-05	PUSH SWITCH(LSB)		
S39 ,40			S40-1428-05	PUSH SWITCH(VOICE)		
S41 -43			S40-1429-05	PUSH SWITCH(LSB)		
S44 ,45			S40-1428-05	PUSH SWITCH(VOICE)		
S46 -52			S40-2440-15	PUSH SWITCH(MAUN/VOX)		
S53 -55			S40-2441-15	PUSH SWITCH(RIT)		
S56 ,57			S40-2440-15	PUSH SWITCH(MAUN/VOX)		
S58			S40-2441-15	PUSH SWITCH(RIT)		
S59 -61			S40-2440-15	PUSH SWITCH(MAUN/VOX)		
D1 -7			RLS73	DIODE		
D12			RLS73	DIODE		
D13			RLZJ10B	DIODE		
D14			RLS73	DIODE		
D101			DAN202K	DIODE		
IC101			TC4066BF	IC(BILATERAL SWITCH X4)		
Q1 -15			DTC143EK	DIGITAL TRANSISTOR		

L:Scandinavia K:USA P:Canada
Y:PX(Far East, Hawaii) T:England E:Europe
Y:AAFES(Europe) X:Australia M:Other Areas

⚠ indicates safety critical components.

PARTS LIST

* New Parts
Parts without Parts No. are not supplied.
Les articles non mentionnes dans le Parts No. ne sont pas fournis.
Teile ohne Parts No. werden nicht geliefert.

SWITCH UNIT (A) (X41-3240-00)
SWITCH UNIT (B) (X41-3250-00)
AVR UNIT (X43-3070-01)

Ref. No. 参照番号	Address 位置	New Parts 新	Parts No. 部品番号	Description 部品名／規格	Destination 仕向	Remarks 備考
Q17			2SC3324(G)	TRANSISTOR		
Q101			DTC124EK	DIGITAL TRANSISTOR		
Q102			2SD1757K	TRANSISTOR		
Q103-106			DTC124EK	DIGITAL TRANSISTOR		
		*	X59-3710-01	MODULE UNIT(MIC AMP)		
SWITCH UNIT (B) (X41-3250-00)						
C1 ,2			CK45B1H102K	CERAMIC 1000PF K		
CN1			E40-3304-05	PIN CONNECTOR(7P)		
CN2			E40-3301-05	PIN CONNECTOR(4P)		
CN3			E40-3300-05	PIN CONNECTOR(3P)		
CN4			E40-3238-05	PIN CONNECTOR(3P)		
CN5			E40-3240-05	PIN CONNECTOR(5P)		
CN6			E40-3300-05	PIN CONNECTOR(3P)		
CN7			E40-3301-05	PIN CONNECTOR(4P)		
CN8			E40-3299-05	PIN CONNECTOR(2P)		
CN9			E40-3241-05	PIN CONNECTOR(6P)		
CN10			E40-3300-05	PIN CONNECTOR(3P)		
CN11			E40-3303-05	PIN CONNECTOR(6P)		
CN12			E40-3302-05	PIN CONNECTOR(5P)		
J1			E11-0437-05	PHONE JACK		
W1 ,2			E31-6065-15	CONNECTING WIRE		
R1			RD14BB2C102J	RD 1.0K J 1/6W		
R2			RD14BB2C563J	RD 56K J 1/6W		
R3			RD14BB2C332J	RD 3.3K J 1/6W		
R4			RD14BB2C183J	RD 18K J 1/6W		
R5 ,6			RD14BB2C472J	RD 4.7K J 1/6W		
R7 ,8			RD14CB2E101J	RD 100 J 1/4W		
R9			RD14BB2C471J	RD 470 J 1/6W		
R10			RD14BB2C223J	RD 22K J 1/6W		
VR1			R24-3405-05	POTENTIO M. 10K		
VR2			R19-3426-05	POTENTIO M. 10K		
VR3			R19-3427-05	POTENTIO M. 10K		
VR4			R19-9413-05	POTENTIO M. 10K/50K		
VR5		*	R24-3409-05	POTENTIO M.100K/10K AGC/KEY SP		
VR6			R19-3428-05	POTENTIO M. 10K		
S1			S29-1441-05	ROTARY SWITCH(ATT)		
S3			W02-0858-15	ENCODER(RIT/XIT)		
S4			W02-0859-05	ENCODER(M.CH/VFO CH)		
AVR UNIT (X43-3070-01)						
C1		*	CK73EF1H224Z	CHIP C 0.22UF Z		
C2			CK73FF1E473Z	CHIP C 0.047UF Z		
C3 ,4			C90-2110-05	ERECTRO 3300UF 35WV		
C5		*	CK73EF1H104Z	CHIP C 0.1UF Z		
C6			CK73FF1E473Z	CHIP C 0.047UF Z		
C7 ,8			CK73FF1H103Z	CHIP C 0.010UF Z		
C9			CK73FB1H102K	CHIP C 1000PF K		
C10			C90-2109-05	ERECTRO 4700UF 25WV		
C11			CK73FF1E473Z	CHIP C 0.047UF Z		
C12			CE04EW1E471M	ELECTRO 470UF 25WV		
C13			CK73FF1H103Z	CHIP C 0.010UF Z		
C14 -16			CE04EW1E101M	ELECTRO 100UF 25WV		
C17 -22			CK73FF1E104Z	CHIP C 0.1UF Z		

L:Scandinavia K:USA P:Canada
Y:PX(Far East, Hawaii) T:England E:Europe
Y:AAFES(Europe) X:Australia M:Other Areas

⚠ indicates safety critical components.

PARTS LIST

* New Parts
Parts without Parts No. are not supplied.
Les articles non mentionnes dans le Parts No. ne sont pas fournis.
Teile ohne Parts No. werden nicht geliefert.

AVR UNIT (X41-3070-01)

Ref. No. 参照番号	Address 位置	New Parts 新	Parts No. 部品番号	Description 部品名／規格	Destination 仕向	Remarks 備考
C23 -25			CE04EW1E101M	ELECTRO 100UF 25WV		
C26 -29			CK45E2H103P	CERAMIC 0.010UF P		
C30			C90-2111-05	ERECTRO 1000UF 80WV		
C31			CK45E2H103P	CERAMIC 0.010UF P		
C32 ,33			CK73FF1H103Z	CHIP C 0.010UF Z		
C34			CE04EW1J101M	ELECTRO 100UF 63WV		
C35 -38		*	CK73EF1H224Z	CHIP C 0.22UF Z		
C39			CE04EW1E102M	ELECTRO 1000UF 25WV		
C40			CK73FF1E104Z	CHIP C 0.1UF Z		
C41			CK73FB1H222K	CHIP C 2200PF K		
C42			CK73EF1E474Z	CHIP C 0.47UF Z		
C43			CE04EW1C471M	ELECTRO 470UF 16WV		
C44			C91-0647-05	CERAMIC 0.01UF P		
C45 ,46			C91-1075-05	CERAMIC 470PF K		
C47 -54			CK45E2H103P	CERAMIC 0.010UF P		
C55 -62		*	CK73EF1H224Z	CHIP C 0.22UF Z		
C63 -65			CK73FF1H103Z	CHIP C 0.010UF Z		
C66			C90-2113-05	ELECTRO 22000UF 80WV		
C67			CK45E2H103P	CERAMIC 0.010UF P		
C68			C90-2112-05	ERECTRO 22000UF 35WV		
C69 ,70			CK73FF1H103Z	CHIP C 0.010UF Z		
C71			CK73FB1H103K	CHIP C 0.010UF K		
C101			CE04EW1H100M	ELECTRO 10UF 50WV		
C102			CK73FB1H103K	CHIP C 0.010UF K		
			E23-0159-05	TERMINAL		
			E23-0198-05	TERMINAL		
CN1			E40-0370-05	PIN CONNECTOR(3P)		
CN2 ,3			E40-3237-05	PIN CONNECTOR(2P)		
CN4			E40-3238-05	PIN CONNECTOR(3P)		
CN5			E40-3240-05	PIN CONNECTOR(5P)		
CN6			E40-3243-05	PIN CONNECTOR(8P)		
CN7			E40-0342-05	PIN CONNECTOR(3P)		
CN8			E40-3241-05	PIN CONNECTOR(6P)		
CN9 ,10			E40-0470-05	PIN CONNECTOR(4P)		
CN11			E40-3238-05	PIN CONNECTOR(3P)		
CN12			E40-3237-05	PIN CONNECTOR(2P)		
CN13			E40-0442-05	PIN CONNECTOR(4P)		
CN14			E40-3238-05	PIN CONNECTOR(3P)		
CN15			E23-0401-05	TERMINAL		
CN16			E23-0401-05	TERMINAL		
TP1			E23-0467-05	TERMINAL		
W1 -4		*	E33-1888-35	FINISHED WIRE SET		
W101		*	E31-6151-05	INSIDE CONNECTING WIRE		
F1			F05-7521-05	FUSE(7.5A)		
			G13-0934-04	CUSHION		
			J13-0055-15	FUSE HOLDER(TRANS 1ST STAGE)		
			J13-0410-05	FUSE HOLDER(TRANS 2ND STAGE)		
			J31-0502-14	COLLAR		
			J42-0428-05	BUSHING		
R1			RS14KB3A2R2J	FL-PROOF RS 2.2 J 1W		
R2			RK73FB2A473J	CHIP R 47K J 1/10W		
R3			RK73FB2A103J	CHIP R 10K J 1/10W		
R4			RS14KB3F151J	FL-PROOF RS 150 J 3W		

L:Scandinavia K:USA P:Canada
Y:PX(Far East, Hawaii) T:England E:Europe
Y:AAFES(Europe) X:Australia M:Other Areas

⚠ indicates safety critical components.

PARTS LIST

× New Parts
Parts without Parts No. are not supplied.
Les articles non mentionnes dans le Parts No. ne sont pas fournis.
Teile ohne Parts No. werden nicht geliefert.

AVR UNIT (X41-3070-01)
RF UNIT (X44-3140-00)

Ref. No. 参照番号	Address 位置	New Parts 新	Parts No. 部品番号	Description 部品名／規格	Destination 仕向	Remarks 備考
R5 ,6			RK73FB2A392J	CHIP R 3.9K J 1/10W		
R7			RS14KB3F181J	FL-PROOF RS 180 J 3W		
R8 ,9			RK73FB2A122J	CHIP R 1.2K J 1/10W		
R10			RK73FB2A102J	CHIP R 1.0K J 1/10W		
R11			RS14KB3A820J	FL-PROOF RS 82 J 1W		
R12			RD14BB2E681J	RD 680 J 1/4W		
R13			RS14KB3A2R2J	FL-PROOF RS 2.2 J 1W		
R14			RK73EB2B223J	CHIP R 22K J 1/8W		
R15			RS14KB3F103J	FL-PROOF RS 10K J 3W		
R16			RS14KB3A820J	FL-PROOF RS 82 J 1W		
R17			R92-1285-05	FUSE RESISTOR 10 2W		
R19 -22			RK73EB2B472J	CHIP R 4.7K J 1/8W		
R23			RK73EB2B223J	CHIP R 22K J 1/8W		
R24			RK73FB2A103J	CHIP R 10K J 1/10W		
R101			RK73FB2A470J	CHIP R 47 J 1/10W		
R102			RK73FB2A223J	CHIP R 22K J 1/10W		
R103			RK73FB2A152J	CHIP R 1.5K J 1/10W		
R104			RS14KB3F150J	FL-PROOF RS 15 J 3W		
R105			RS14KB3F180J	FL-PROOF RS 18 J 3W		
VR1			R12-0105-05	POTENTIO M. 220		
S1			S59-1416-05	THERMAL SWITCH(90°C)		
S2			S59-1411-05	THERMAL SWITCH(50°C)		
8JZ47			SF8GZ47	THYRISTOR		
D1			1B2C1(LC1)	DIODE		
D2			RLS73	CHIP DIODE		
D3			RLZ7.5B	CHIP DIODE		
D4			UZP6.2B	ZENER DIODE(6.2V)		
D5 ,6			S1WB10	DIODE		
D7 ,8			RLZ20C	CHIP DIODE		
D9			S15VB20	DIODE		
D10			S15VB10	DIODE		
D101			RLS73	CHIP DIODE		
D102			RLZ15B	CHIP DIODE		
D103			SF8GZ47	THYRISTOR		
IC1 -3			UPC7805H	IC(VOLTAGE REGULATOR/ +5V)		
IC4			UPC7912HF	IC(VOLTAGE REGULATOR/ -12V)		
Q1			2SB941(Q)	TRANSISTOR		
Q2			2SC3907(Q)	TRANSISTOR		
Q3			2SD1624(S)	TRANSISTOR		
Q4			2SC2712(Y)	TRANSISTOR		
Q5			2SA1358(Y)	TRANSISTOR		
Q101			DTC114EK	DIGITAL TRANSISTOR		
Q102			2SA1358(Y)	TRANSISTOR		
RF UNIT (X44-3140-00)						
C1 -3			CK73FB1E103K	CHIP C 0.01UF K		
C4			CK73FB1H102K	CHIP C 1000PF K		
C5			CK73FF1E104Z	CHIP C 0.1UF Z		
C6			CC73FCH1H101J	CHIP C 100PF J		
C7			CC73FCH1H200J	CHIP C 20PF J		
C8			CC73FSL1H151J	CHIP C 150PF J		
C9			CC73FCH1H560J	CHIP C 56PF J		
C10			CC73FCH1H820J	CHIP C 82PF J		
C11 ,12			CK73FF1E104Z	CHIP C 0.1UF Z		
C13			CE04EW1C220M	ELECTRO 22UF 16WV		

L:Scandinavia K:USA P:Canada
Y:PX(Far East, Hawaii) T:England E:Europe
Y:AAFES(Europe) X:Australia M:Other Areas

⚠ indicates safety critical components.

TS-950SDX

PARTS LIST

× New Parts
Parts without Parts No. are not supplied.
Les articles non mentionnes dans le Parts No. ne sont pas fournis.
Teile ohne Parts No. werden nicht geliefert.

RF UNIT (X44-3140-00)

Ref. No. 参照番号	Address 位置	New Parts 新	Parts No. 部品番号	Description 部品名／規格			Destination 仕向	Remarks 備考
C14 -17			CK73FB1H102K	CHIP C	1000PF	K		
C18 -20			CK73FF1E104Z	CHIP C	0.1UF	Z		
C21			CE04EW1C220M	ELECTRO	22UF	16WV		
C22			CK73FB1H222K	CHIP C	2200PF	K		
C23			CK73FB1H392K	CHIP C	3900PF	K		
C24 ,25			CK73FB1H472K	CHIP C	4700PF	K		
C26			CE04EW1C220M	ELECTRO	22UF	16WV		
C27			CK73FF1E104Z	CHIP C	0.1UF	Z		
C28			CC73FSL1H471J	CHIP C	47PF	J		
C29			CC73FSL1H681J	CHIP C	680PF	J		
C30			CC73FSL1H471J	CHIP C	47PF	J		
C31			CK73FB1E223K	CHIP C	0.022UF	K		
C32			CK73FB1E103K	CHIP C	0.01UF	K		
C33			CK73FB1H682K	CHIP C	6800PF	K		
C34			CC73FSL1H471J	CHIP C	47PF	J		
C35			CC73FSL1H271J	CHIP C	270PF	J		
C36			CC73FSL1H471J	CHIP C	47PF	J		
C37			CK73FF1E104Z	CHIP C	0.1UF	Z		
C38			CE04EW1C220M	ELECTRO	22UF	16WV		
C39			CK73FF1E104Z	CHIP C	0.1UF	Z		
C40			CC73FSL1H471J	CHIP C	47PF	J		
C41			CC73FSL1H151J	CHIP C	150PF	J		
C42			CC73FSL1H471J	CHIP C	47PF	J		
C43			CK73FF1E104Z	CHIP C	0.1UF	Z		
C44			CE04EW1C220M	ELECTRO	22UF	16WV		
C45			CK73FF1E104Z	CHIP C	0.1UF	Z		
C46			CC73FSL1H181J	CHIP C	180PF	J		
C47 ,48			CC73FSL1H121J	CHIP C	120PF	J		
C49			CK73FF1E104Z	CHIP C	0.1UF	Z		
C50			CE04EW1C220M	ELECTRO	22UF	16WV		
C51			CK73FF1E104Z	CHIP C	0.1UF	Z		
C52			CC73FSL1H561J	CHIP C	650PF	J		
C53			CC73FCH1H270J	CHIP C	27PF	J		
C54			CC73FSL1H471J	CHIP C	47PF	J		
C55			CK73FF1E104Z	CHIP C	0.1UF	Z		
C56			CE04EW1C220M	ELECTRO	22UF	16WV		
C57			CK73FF1E104Z	CHIP C	0.1UF	Z		
C58			CC73FSL1H221J	CHIP C	220PF	J		
C59			CC73FCH1H470J	CHIP C	47PF	J		
C60			CC73FSL1H121J	CHIP C	120PF	J		
C61			CK73FF1E104Z	CHIP C	0.1UF	Z		
C62			CE04EW1C220M	ELECTRO	22UF	16WV		
C63			CK73FF1E104Z	CHIP C	0.1UF	Z		
C64			CC73FSL1H471J	CHIP C	47PF	J		
C65			CC73FCH1H180J	CHIP C	18PF	J		
C66			CC73FSL1H331J	CHIP C	330PF	J		
C67			CK73FF1E104Z	CHIP C	0.1UF	Z		
C68			CE04EW1C220M	ELECTRO	22UF	16WV		
C69			CK73FF1E104Z	CHIP C	0.1UF	Z		
C70			CC73FSL1H181J	CHIP C	180PF	J		
C71			CC73FCH1H330J	CHIP C	33PF	J		
C73			CE04EW1C220M	ELECTRO	22UF	16WV		
C74			CK73FF1E104Z	CHIP C	0.1UF	Z		
C75			CC73FSL1H331J	CHIP C	330PF	J		
C76			CC73FCH1H120J	CHIP C	12PF	J		

L:Scandinavia K:USA P:Canada
Y:PX(Far East, Hawaii) T:England E:Europe
Y:AAFES(Europe) X:Australia M:Other Areas

⚠ indicates safety critical components.

PARTS LIST

* New Parts
Parts without Parts No. are not supplied.
Les articles non mentionnes dans le Parts No. ne sont pas fournis.
Teile ohne Parts No. werden nicht geliefert.

RF UNIT (X44-3140-00)

Ref. No. 参照番号	Address 位置	New Parts 新	Parts No. 部品番号	Description 部品名／規格			Destination 仕向	Remarks 備考
C77			CC73FSL1H221J	CHIP C	220PF	J		
C78			CK73FF1E104Z	CHIP C	0.1UF	Z		
C79			CE04EW1C220M	ELECTRO	22UF	16WV		
C80			CK73FF1E104Z	CHIP C	0.1UF	Z		
C81			CC73FSL1H221J	CHIP C	220PF	J		
C82 ,83			CC73FCH1H180J	CHIP C	18PF	J		
C84			CK73FF1E104Z	CHIP C	0.1UF	Z		
C85			CE04EW1C220M	ELECTRO	22UF	16WV		
C86			CK73FF1E104Z	CHIP C	0.1UF	Z		
C87			CC73FSL1H221J	CHIP C	220PF	J		
C88			CC73FCH1H120J	CHIP C	12PF	J		
C89			CC73FCH1H680J	CHIP C	68PF	J		
C90			CK73FF1E104Z	CHIP C	0.1UF	Z		
C91			CE04EW1C220M	ELECTRO	22UF	16WV		
C92			CK73FF1E104Z	CHIP C	0.1UF	Z		
C93			CC73FSL1H221J	CHIP C	220PF	J		
C94			CC73FCH1H080D	CHIP C	8PF	D		
C96			CK73FF1E104Z	CHIP C	0.1UF	Z		
C97			CE04EW1C220M	ELECTRO	22UF	16WV		
C98			CK73FF1E104Z	CHIP C	0.1UF	Z		
C99			CC73FSL1H151J	CHIP C	150PF	J		
C100			CC73FCH1H080D	CHIP C	8PF	D		
C101			CK73FF1E104Z	CHIP C	0.1UF	Z		
C102			CE04EW1C220M	ELECTRO	22UF	16WV		
C103			CK73FF1E104Z	CHIP C	0.1UF	Z		
C104			CC73FCH1H150J	CHIP C	15PF	J		
C105			CC73FCH1H330J	CHIP C	33PF	J		
C106			CC73FCH1H150J	CHIP C	15PF	J		
C107			CK73FF1E104Z	CHIP C	0.1UF	Z		
C108			CE04EW1C220M	ELECTRO	22UF	16WV		
C109-116			CK73FF1E104Z	CHIP C	0.1UF	Z		
C118			CE04EW1H010M	ELECTRO	1.0UF	50WV		
C119			CE04EW1E4R7M	ELECTRO	4.7UF	25WV		
C120			CE04EW1H0R1M	ELECTRO	0.1UF	50WV		
C121			CC73FCH1H101J	CHIP C	100PF	J		
C122			CK73FF1E104Z	CHIP C	0.1UF	Z		
C124,125			CK73FF1E104Z	CHIP C	0.1UF	Z		
C126			CE04EW1C470M	ELECTRO	47UF	16WV		
C127			CK73FF1E104Z	CHIP C	0.1UF	Z		
C129-131			CK73FF1E104Z	CHIP C	0.1UF	Z		
C132			CE04EW1C220M	ELECTRO	22UF	16WV		
C133-135			CK73FF1E104Z	CHIP C	0.1UF	Z		
C136			CC73FCH1H150J	CHIP C	15PF	J		
C137			CC73FCH1H270J	CHIP C	27PF	J		
C138			CC73FCH1H330J	CHIP C	33PF	J		
C139-141			CK73FF1E104Z	CHIP C	0.1UF	Z		
C142			CC73FCH1H101J	CHIP C	100PF	J		
C143			CC73FCH1H200J	CHIP C	20PF	J		
C144			CC73FSL1H151J	CHIP C	150PF	J		
C145			CC73FCH1H560J	CHIP C	56PF	J		
C146			CC73FCH1H820J	CHIP C	82PF	J		
C147-149			CK73FF1E104Z	CHIP C	0.1UF	Z		
C150			CE04EW1C220M	ELECTRO	22UF	16WV		
C151-153			CK73FF1E104Z	CHIP C	0.1UF	Z		
C154			CK73FB1E103K	CHIP C	0.01UF	K		

L:Scandinavia K:USA P:Canada
Y:PX(Far East, Hawaii) T:England E:Europe
Y:AAFES(Europe) X:Australia M:Other Areas

⚠ indicates safety critical components.

TS-950SDX

PARTS LIST

⁎ New Parts
Parts without Parts No. are not supplied.
Les articles non mentionnes dans le Parts No. ne sont pas fournis.
Teile ohne Parts No. werden nicht geliefert.

RF UNIT (X44-3140-00)

Ref. No. 参照番号	Address 位置	New Parts 新	Parts No. 部品番号	Description 部品名／規格			Destination 仕向	Remarks 備考
C156			CK73FF1E104Z	CHIP C	0.1UF	Z		
C159			CC73FCH1H060D	CHIP C	6PF	D		
C160			CC73FCH1H020C	CHIP C	2.0PF	C		
C161			CC73FCH1H080D	CHIP C	8PF	D		
C162-165			CK73FB1E103K	CHIP C	0.01UF	K		
C166-168			CK73FF1E104Z	CHIP C	0.1UF	Z		
C169			CC73FCH1H101J	CHIP C	100PF	J		
C170			CC73FCH1H200J	CHIP C	20PF	J		
C171			CC73FSL1H151J	CHIP C	150PF	J		
C172			CC73FCH1H560J	CHIP C	56PF	J		
C173			CC73FCH1H820J	CHIP C	82PF	J		
C174			CE04EW1C220M	ELECTRO	22UF	16WV		
C175-177			CK73FF1E104Z	CHIP C	0.1UF	Z		
C179-185			CK73FB1H102K	CHIP C	1000PF	K		
C186			CC73FCH1H0R5C	CHIP C	0.5PF	C		
C187			CC73FCH1H010C	CHIP C	1PF	C		
C188,189			CK73FF1E104Z	CHIP C	0.1UF	Z		
C190			CK73FB1H102K	CHIP C	1000PF	K		
C191			CK73FF1E104Z	CHIP C	0.1UF	Z		
C192			CK73FB1H102K	CHIP C	1000PF	K		
C194-196			CK73FF1E104Z	CHIP C	0.1UF	Z		
C197,198			CK73FB1H102K	CHIP C	1000PF	K		
C199			CK73FB1E103K	CHIP C	0.01UF	K		
C200			CK73FF1E104Z	CHIP C	0.1UF	Z		
C201			CK73FB1E103K	CHIP C	0.01UF	K		
C203			CC73FCH1H330J	CHIP C	33PF	J		
C204			CC73FSL1H271J	CHIP C	270PF	J		
C205			CC73FSL1H121J	CHIP C	120PF	J		
C206,207			CK73FB1E103K	CHIP C	0.01UF	K		
C208			CC73FSL1H181J	CHIP C	180PF	J		
C209			CC73FSL1H221J	CHIP C	220PF	J		
C210			CK73FF1E104Z	CHIP C	0.1UF	Z		
C211			CC73FCH1H680J	CHIP C	68PF	J		
C212,213			CK73FB1E103K	CHIP C	0.01UF	K		
C214			CC73FCH1H680J	CHIP C	68PF	J		
C215			CC73FCH1H101J	CHIP C	100PF	J		
C216			CC73FCH1H680J	CHIP C	68PF	J		
C219,220			CK73FB1E103K	CHIP C	0.01UF	K		
C221			CK73FF1E104Z	CHIP C	0.1UF	Z		
C222			CK73FB1E103K	CHIP C	0.01UF	K		
C223-227			CK73FF1E104Z	CHIP C	0.1UF	Z		
C228			CC73FCH1H330J	CHIP C	33PF	J		
C229			CC73FCH1H120J	CHIP C	12PF	J		
C230			CC73FCH1H680J	CHIP C	68PF	J		
C232			CK73FF1E104Z	CHIP C	0.1UF	Z		
C234			CK73FF1E104Z	CHIP C	0.1UF	Z		
C235,236			CC73FCH1H680J	CHIP C	68PF	J		
C237			CK73FB1E103K	CHIP C	0.01UF	K		
C238			CK73FF1E104Z	CHIP C	0.1UF	Z		
C240			CK73FF1E104Z	CHIP C	0.1UF	Z		
C241			CK73FB1E103K	CHIP C	0.01UF	K		
C242			CC73FCH1H220J	CHIP C	22PF	J		
C243			CK73FF1E104Z	CHIP C	0.1UF	Z		
C244,245			CC73FSL1H271J	CHIP C	270PF	J		
C246			CK73FF1E104Z	CHIP C	0.1UF	Z		

L:Scandinavia K:USA P:Canada
Y:PX(Far East, Hawaii) T:England E:Europe
Y:AAFES(Europe) X:Australia M:Other Areas

⚠ indicates safety critical components.

PARTS LIST

× New Parts
Parts without Parts No. are not supplied.
Les articles non mentionnes dans le Parts No. ne sont pas fournis.
Teile ohne Parts No. werden nicht geliefert.

RF UNIT (X44-3140-00)

Ref. No. 参照番号	Address 位置	New Parts 新	Parts No. 部品番号	Description 部品名／規格	Destination 仕向	Remarks 備考
TC1			C05-0315-05	TRIM CAP 60PF		
CN1			E04-0157-05	RF COAXIAL CABLE RECEPTACLE		
CN2			E40-3237-05	PIN CONNECTOR FOR INSIDE		
CN3 ,4			E04-0157-05	RF COAXIAL CABLE RECEPTACLE		
CN6			E40-3241-05	PIN CONNECTOR FOR INSIDE		
CN7			E04-0157-05	RF COAXIAL CABLE RECEPTACLE		
CN8			E13-0261-05	PHONO JACK		
CN9			E40-3239-05	PIN CONNECTOR FOR INSIDE		
CN10			E04-0157-05	RF COAXIAL CABLE RECEPTACLE		
TP1 -4			E23-0512-05	TERMINAL		
W2			E33-1898-35	FINISHED WIRE SET		
W4 ,5			E33-1898-35	FINISHED WIRE SET		
A1 ,2			F11-0770-14	SHIELDING CASE		
L1			L40-2282-13	SMALL FIXED INDUCTOR(0.22UH)		
L2			L40-2782-13	SMALL FIXED INDUCTOR(0.27UH)		
L3			L19-0324-05	BALUN TRANSFORMER		
L4			L40-1021-14	SMALL FIXED INDUCTOR(1MH)		
L5 -9			L40-1001-19	SMALL FIXED INDUCTOR(10UH)		
L10			L40-1021-14	SMALL FIXED INDUCTOR(1MH)		
L11 ,12			L40-1011-14	SMALL FIXED INDUCTOR(100UH)		
L13			L40-8201-14	SMALL FIXED INDUCTOR(82UH)		
L14			L40-4701-14	SMALL FIXED INDUCTOR(47UH)		
L15			L40-5601-14	SMALL FIXED INDUCTOR(56UH)		
L16			L40-8291-14	SMALL FIXED INDUCTOR(8.2UH)		
L18			L40-8291-14	SMALL FIXED INDUCTOR(8.2UH)		
L19			L34-4164-05	COIL		
L20			L34-4176-05	COIL		
L21			L34-4164-05	COIL		
L22			L40-3391-14	SMALL FIXED INDUCTOR(3.3UH)		
L23			L40-6891-14	SMALL FIXED INDUCTOR(6.8UH)		
L24			L40-3991-14	SMALL FIXED INDUCTOR(3.9UH)		
L25			L34-4146-05	COIL		
L26			L34-4178-05	COIL		
L27			L34-4146-05	COIL		
L28			L40-1292-14	SMALL FIXED INDUCTOR(1.2UH)		
L29			L40-6891-14	SMALL FIXED INDUCTOR(6.8UH)		
L30			L40-1292-14	SMALL FIXED INDUCTOR(1.2UH)		
L31			L34-4140-05	COIL		
L32			L34-4175-05	COIL		
L33			L34-4140-05	COIL		
L34			L40-8282-14	SMALL FIXED INDUCTOR(0.82UH)		
L35			L40-5691-14	SMALL FIXED INDUCTOR(5.6UH)		
L36			L40-8282-14	SMALL FIXED INDUCTOR(0.82UH)		
L37			L34-4136-05	COIL		
L38			L34-4172-05	COIL		
L39			L34-4136-05	COIL		
L40			L40-4782-14	SMALL FIXED INDUCTOR(0.47UH)		
L41			L40-5691-14	SMALL FIXED INDUCTOR(5.6UH)		
L42			L40-3982-14	SMALL FIXED INDUCTOR(0.39UH)		
L43			L40-3382-14	SMALL FIXED INDUCTOR(0.33UH)		
L44			L40-5691-14	SMALL FIXED INDUCTOR(5.6UH)		
L45			L40-2782-14	SMALL FIXED INDUCTOR(0.27UH)		
L46			L34-4132-05	COIL		

L:Scandinavia K:USA P:Canada
Y:PX(Far East, Hawaii) T:England E:Europe
Y:AAFES(Europe) X:Australia M:Other Areas

⚠ indicates safety critical components.

TS-950SDX

PARTS LIST

* New Parts
Parts without Parts No. are not supplied.
Les articles non mentionnes dans le Parts No. ne sont pas fournis.
Teile ohne Parts No. werden nicht geliefert.

RF UNIT (X44-3140-00)

Ref. No. 参照番号	Address 位置	New Parts 新	Parts No. 部品番号	Description 部品名／規格	Destination 仕向	Remarks 備考
L47			L34-4166-05	COIL		
L48			L34-4132-05	COIL		
L49			L40-2782-14	SMALL FIXED INDUCTOR(0.27UH)		
L50			L40-5691-14	SMALL FIXED INDUCTOR(5.6UH)		
L51			L40-2282-14	SMALL FIXED INDUCTOR(0.22UH)		
L52			L34-4192-05	COIL		
L53			L34-4193-05	COIL		
L54			L34-4194-05	COIL		
L55 ,56			L40-4711-14	SMALL FIXED INDUCTOR(470UH)		
L57 -59			L40-1021-14	SMALL FIXED INDUCTOR(1MH)		
L60 ,61			L19-0324-05	BALUN TRANSFORMER		
L62			L40-1021-14	SMALL FIXED INDUCTOR(1MH)		
L63			L19-0324-05	BALUN TRANSFORMER		
L64			L40-1021-14	SMALL FIXED INDUCTOR(1MH)		
L65			L19-0324-05	BALUN TRANSFORMER		
L66			L40-4782-17	SMALL FIXED INDUCTOR(0.47UH)		
L67			L40-1021-14	SMALL FIXED INDUCTOR(1MH)		
L68			L34-4046-15	COIL		
L69			L34-0895-05	COIL		
L70			L19-0344-05	BALUN TRANSFORMER		
L71			L40-1021-14	SMALL FIXED INDUCTOR(1MH)		
L72			L40-2782-14	SMALL FIXED INDUCTOR(0.27UH)		
L73			L40-2282-14	SMALL FIXED INDUCTOR(0.22UH)		
L74			L40-1021-14	SMALL FIXED INDUCTOR(1MH)		
L75			L19-0324-05	BALUN TRANSFORMER		
L76			L40-1001-14	SMALL FIXED INDUCTOR(10UH)		
L77			L34-2267-05	COIL		
L78			L34-4047-05	COIL		
L79			L34-4048-05	COIL		
L80			L34-4047-05	COIL		
L81			L39-0454-05	COIL		
L82 ,83			L40-1021-14	SMALL FIXED INDUCTOR(1MH)		
L84			L40-2782-14	SMALL FIXED INDUCTOR(0.27UH)		
L85			L40-2282-14	SMALL FIXED INDUCTOR(0.22UH)		
L86			L19-0324-05	BALUN TRANSFORMER		
L87			L34-4222-05	COIL		
L88			L40-4791-14	SMALL FIXED INDUCTOR(4.7UH)		
L89			L39-0454-05	COIL		
L90			L39-0455-05	COIL		
L91 ,92			L39-0454-05	COIL		
L93			L34-4211-05	COIL		
L94 ,95			L34-4190-05	COIL		
L96			L40-1021-14	SMALL FIXED INDUCTOR(1MH)		
L97			L40-2292-17	SMALL FIXED INDUCTOR(2.2UH)		
L98			L40-3391-17	SMALL FIXED INDUCTOR(3.3UH)		
L99			L40-1592-17	SMALL FIXED INDUCTOR(1.5UH)		
L100			L40-1892-17	SMALL FIXED INDUCTOR(1.8UH)		
L101			L40-1592-17	SMALL FIXED INDUCTOR(1.5UH)		
L102-104			L40-6882-17	SMALL FIXED INDUCTOR(0.68UH)		
L105			L40-1021-14	SMALL FIXED INDUCTOR(1MH)		
L106			L40-6882-17	SMALL FIXED INDUCTOR(0.68UH)		
L107			L40-4782-17	SMALL FIXED INDUCTOR(0.47UH)		
L108			L39-0432-05	COIL		
L109			L40-1011-14	SMALL FIXED INDUCTOR(100UH)		
L110			L39-0454-05	COIL		

L:Scandinavia K:USA P:Canada
Y:PX(Far East, Hawaii) T:England E:Europe
Y:AAFES(Europe) X:Australia M:Other Areas

⚠ indicates safety critical components.

PARTS LIST

※ New Parts
Parts without Parts No. are not supplied.
Les articles non mentionnes dans le Parts No. ne sont pas fournis.
Teile ohne Parts No. werden nicht geliefert.

RF UNIT (X44-3140-00)

Ref. No. 参照番号	Address 位置	New Parts 新	Parts No. 部品番号	Description 部品名／規格	Destination 仕向	Remarks 備考
L111			L40-1021-14	SMALL FIXED INDUCTOR(1MH)		
L112-114			L40-2292-14	SMALL FIXED INDUCTOR(2.2UH)		
L115			L40-3301-14	SMALL FIXED INDUCTOR(33UH)		
L116			L40-1501-14	SMALL FIXED INDUCTOR(15UH)		
L116			L40-1501-14	SMALL FIXED INDUCTOR(15UH)		
L117			L40-3301-14	SMALL FIXED INDUCTOR(33UH)		
L118-120			L40-1001-19	SMALL FIXED INDUCTOR(10UH)		
XF1			L71-0275-05	CRYSTAL FILTER(40.055MHZ)		
R1			RK73FB2A470J	CHIP R 47 J 1/10W		
R2			RK73FB2A101J	CHIP R 100 J 1/10W		
R3			RK73FB2A151J	CHIP R 150 J 1/10W		
R4 -6			RK73FB2A820J	CHIP R 82 J 1/10W		
R7			RK73FB2A223J	CHIP R 22K J 1/10W		
R8			RK73FB2A222J	CHIP R 2.2K J 1/10W		
R9			RK73FB2A123J	CHIP R 12K J 1/10W		
R10			RK73FB2A471J	CHIP R 470 J 1/10W		
R11 -14			RK73FB2A222J	CHIP R 2.2K J 1/10W		
R15 -29			RK73FB2A104J	CHIP R 100K J 1/10W		
R30 ,31			RK73FB2A102J	CHIP R 1.0K J 1/10W		
R32			RK73FB2A221J	CHIP R 220 J 1/10W		
R33 ,34			RK73FB2A151J	CHIP R 150 J 1/10W		
R35			RK73FB2A330J	CHIP R 33 J 1/10W		
R36			RK73FB2A221J	CHIP R 220 J 1/10W		
R37			RK73FB2A101J	CHIP R 100 J 1/10W		
R38			RK73FB2A221J	CHIP R 220 J 1/10W		
R39			RK73FB2A101J	CHIP R 100 J 1/10W		
R40			RK73FB2A221J	CHIP R 220 J 1/10W		
R41			RK73FB2A101J	CHIP R 100 J 1/10W		
R42			RK73FB2A221J	CHIP R 220 J 1/10W		
R43			RK73FB2A101J	CHIP R 100 J 1/10W		
R44			RK73FB2A221J	CHIP R 220 J 1/10W		
R45			RK73FB2A101J	CHIP R 100 J 1/10W		
R46			RK73FB2A221J	CHIP R 220 J 1/10W		
R47			RK73FB2A101J	CHIP R 100 J 1/10W		
R48			RK73FB2A221J	CHIP R 220 J 1/10W		
R49			RK73FB2A101J	CHIP R 100 J 1/10W		
R50			RK73FB2A221J	CHIP R 220 J 1/10W		
R51			RK73FB2A101J	CHIP R 100 J 1/10W		
R52			RK73FB2A221J	CHIP R 220 J 1/10W		
R53			RK73FB2A101J	CHIP R 100 J 1/10W		
R54			RK73FB2A221J	CHIP R 220 J 1/10W		
R55			RK73FB2A101J	CHIP R 100 J 1/10W		
R56			RK73FB2A221J	CHIP R 220 J 1/10W		
R57			RK73FB2A101J	CHIP R 100 J 1/10W		
R58			RK73FB2A221J	CHIP R 220 J 1/10W		
R59			RK73FB2A101J	CHIP R 100 J 1/10W		
R60			RK73FB2A221J	CHIP R 220 J 1/10W		
R61			RK73FB2A101J	CHIP R 100 J 1/10W		
R62 ,63			RK73FB2A221J	CHIP R 220 J 1/10W		
R64 -66			RK73FB2A471J	CHIP R 470 J 1/10W		
R68			RK73FB2A102J	CHIP R 1.0K J 1/10W		
R70 ,71			RK73FB2A470J	CHIP R 47 J 1/10W		
R72 ,73			RK73FB2A102J	CHIP R 1.0K J 1/10W		
R74			RK73FB2A223J	CHIP R 22K J 1/10W		

L:Scandinavia K:USA P:Canada
Y:PX(Far East, Hawaii) T:England E:Europe
Y:AAFES(Europe) X:Australia M:Other Areas

⚠ indicates safety critical components.

TS-950SDX

PARTS LIST

⋇ New Parts
Parts without Parts No. are not supplied.
Les articles non mentionnes dans le Parts No. ne sont pas fournis.
Teile ohne Parts No. werden nicht geliefert.

RF UNIT (X44-3140-00)

Ref. No. 参照番号	Address 位置	New Parts 新	Parts No. 部品番号	Description 部品名／規格	Destination 仕向	Remarks 備考
R75			RK73FB2A272J	CHIP R 2.7K J 1/10W		
R76 -78			RK73FB2A103J	CHIP R 10K J 1/10W		
R79			RK73FB2A471J	CHIP R 470 J 1/10W		
R80			RK73FB2A470J	CHIP R 47 J 1/10W		
R81			RK73FB2A680J	CHIP R 68 J 1/10W		
R82			RK73FB2A221J	CHIP R 220 J 1/10W		
R83			RK73FB2A471J	CHIP R 470 J 1/10W		
R84			RK73FB2A470J	CHIP R 47 J 1/10W		
R85			RK73FB2A560J	CHIP R 56 J 1/10W		
R86			RK73FB2A220J	CHIP R 22 J 1/10W		
R87 ,88			RK73FB2A103J	CHIP R 10K J 1/10W		
R89			RK73FB2A221J	CHIP R 220 J 1/10W		
R90			RK73FB2A101J	CHIP R 100 J 1/10W		
R91			RK73FB2A471J	CHIP R 470 J 1/10W		
R92 ,93			RK73FB2A473J	CHIP R 47K J 1/10W		
R94			RK73FB2A103J	CHIP R 10K J 1/10W		
R95			RK73FB2A102J	CHIP R 1.0K J 1/10W		
R96			RK73FB2A680J	CHIP R 68 J 1/10W		
R97			RK73FB2A101J	CHIP R 100 J 1/10W		
R98			RK73FB2A221J	CHIP R 220 J 1/10W		
R99 ,100			RK73FB2A821J	CHIP R 820 J 1/10W		
R101-104			RK73FB2A100J	CHIP R 10 J 1/10W		
R106			RK73FB2A102J	CHIP R 1.0K J 1/10W		
R107			RK73FB2A101J	CHIP R 100 J 1/10W		
R108			RK73FB2A680J	CHIP R 68 J 1/10W		
R109,110			RK73FB2A821J	CHIP R 820 J 1/10W		
R111-114			RK73FB2A100J	CHIP R 10 J 1/10W		
R115			RK73FB2A221J	CHIP R 220 J 1/10W		
R116			RK73FB2A470J	CHIP R 47 J 1/10W		
R117			RK73FB2A220J	CHIP R 22 J 1/10W		
R118			RK73FB2A680J	CHIP R 68 J 1/10W		
R119			RK73FB2A152J	CHIP R 1.5K J 1/10W		
R120			RK73FB2A471J	CHIP R 470 J 1/10W		
R121			RK73FB2A560J	CHIP R 56 J 1/10W		
R122			RK73FB2A470J	CHIP R 47 J 1/10W		
R123			RK73FB2A221J	CHIP R 220 J 1/10W		
R124			RK73FB2A470J	CHIP R 47 J 1/10W		
R125			RK73FB2A330J	CHIP R 33 J 1/10W		
R126			RK73FB2A680J	CHIP R 68 J 1/10W		
R127			RK73FB2A152J	CHIP R 1.5K J 1/10W		
R128			RK73FB2A471J	CHIP R 470 J 1/10W		
R129			RK73FB2A560J	CHIP R 56 J 1/10W		
R130			RK73FB2A470J	CHIP R 47 J 1/10W		
R131			RK73FB2A680J	CHIP R 68 J 1/10W		
R132			RK73FB2A333J	CHIP R 33K J 1/10W		
R133			RK73FB2A221J	CHIP R 220 J 1/10W		
R134			RK73FB2A104J	CHIP R 100K J 1/10W		
R135			RK73FB2A472J	CHIP R 4.7K J 1/10W		
R136			RK73FB2A471J	CHIP R 470 J 1/10W		
R137			RK73FB2A473J	CHIP R 47K J 1/10W		
R138			RK73FB2A101J	CHIP R 100 J 1/10W		
R139			RK73FB2A471J	CHIP R 470 J 1/10W		
R140			RK73FB2A101J	CHIP R 100 J 1/10W		
R141			RK73FB2A153J	CHIP R 15K J 1/10W		
R142			RK73FB2A104J	CHIP R 100K J 1/10W		

L:Scandinavia K:USA P:Canada
Y:PX(Far East, Hawaii) T:England E:Europe
Y:AAFES(Europe) X:Australia M:Other Areas

⚠ indicates safety critical components.

PARTS LIST

* New Parts
Parts without Parts No. are not supplied.
Les articles non mentionnes dans le Parts No. ne sont pas fournis.
Teile ohne Parts No. werden nicht geliefert.

RF UNIT (X44-3140-00)

Ref. No. 参照番号	Address 位置	New Parts 新	Parts No. 部品番号	Description 部品名／規格	Destination 仕向	Remarks 備考
R143			RK73FB2A220J	CHIP R 22 J 1/10W		
R144,145			RK73FB2A330J	CHIP R 33 J 1/10W		
R146			RK73FB2A220J	CHIP R 22 J 1/10W		
R147,148			RK73FB2A181J	CHIP R 180 J 1/10W		
R149			RK73FB2A102J	CHIP R 1.0K J 1/10W		
R150,151			RK73FB2A221J	CHIP R 220 J 1/10W		
R152			RK73FB2A471J	CHIP R 470 J 1/10W		
R153			RK73FB2A681J	CHIP R 680 J 1/10W		
R154,155			RK73FB2A221J	CHIP R 220 J 1/10W		
R156,157			RK73FB2A681J	CHIP R 680 J 1/10W		
R158,159			RK73FB2A221J	CHIP R 220 J 1/10W		
R160,161			RK73FB2A681J	CHIP R 680 J 1/10W		
R162,163			RK73FB2A221J	CHIP R 220 J 1/10W		
R164			RK73FB2A681J	CHIP R 680 J 1/10W		
R165			RK73FB2A471J	CHIP R 470 J 1/10W		
R166			RK73FB2A221J	CHIP R 220 J 1/10W		
R167-169			RK73FB2A823J	CHIP R 82K J 1/10W		
R170			RK73FB2A393J	CHIP R 39K J 1/10W		
R171			RK73FB2A123J	CHIP R 12K J 1/10W		
R172			RK73FB2A223J	CHIP R 22K J 1/10W		
R173			RK73FB2A273J	CHIP R 27K J 1/10W		
R174			RK73FB2A562J	CHIP R 5.6K J 1/10W		
R175,176			RK73FB2A560J	CHIP R 56 J 1/10W		
R177			RK73FB2A392J	CHIP R 3.9K J 1/10W		
R178,179			RK73FB2A221J	CHIP R 220 J 1/10W		
R180			RK73FB2A682J	CHIP R 6.8K J 1/10W		
R181			RK73FB2A561J	CHIP R 560 J 1/10W		
R182			RK73FB2A102J	CHIP R 1.0K J 1/10W		
R183-185			RK73FB2A330J	CHIP R 33 J 1/10W		
R186,187			RK73FB2A471J	CHIP R 470 J 1/10W		
R188			RK73FB2A682J	CHIP R 6.8K J 1/10W		
R189-203			RK73FB2A221J	CHIP R 220 J 1/10W		
R204			RK73FB2A471J	CHIP R 470 J 1/10W		
VR1 ,2			R12-1089-05	TRIM POT. 4.7K		
VR3			R12-0108-05	TRIM POT. 470		
VR4 -6			R12-3103-05	TRIM POT. 47K		
W1			R92-1061-05	JUMPER REST 0 OHM		
K1 ,2			S51-1436-05	RELAY		
D1 ,2			RLS73	CHIP DIODE		
D3			RLZJ5.1B	CHIP ZENER DIODE(5.1V)		
D4 ,5			US1090	CHIP DIODE		
D6			1S2588	DIODE		
D7 -36			RLS135	CHIP DIODE		
D37 ,38			MI204	DIODE		
D39			RLS135	CHIP DIODE		
D40 ,41			LN01201C	LED		
D42 -45			RLS135	CHIP DIODE		
D46 ,47			RLS73	CHIP DIODE		
D48 -57			RLS135	CHIP DIODE		
D58 -60			RLS73	CHIP DIODE		
D61 ,62			DAN202K	CHIP DIODE		
D63			DSP-301N	DIODE		
D64			RLS135	CHIP DIODE		

L:Scandinavia K:USA P:Canada
Y:PX(Far East, Hawaii) T:England E:Europe
Y:AAFES(Europe) X:Australia M:Other Areas

⚠ indicates safety critical components.

TS-950SDX

PARTS LIST

* New Parts
Parts without Parts No. are not supplied.
Les articles non mentionnes dans le Parts No. ne sont pas fournis.
Teile ohne Parts No. werden nicht geliefert.

RF UNIT (X41-3140-00)
FINAL UNIT (X45-3450-00)

Ref. No. 参照番号	Address 位置	New Parts 新	Parts No. 部品番号	Description 部品名／規格	Destination 仕向	Remarks 備考
D65			RLS73	CHIP DIODE		
D66			RLS135	CHIP DIODE		
IC1 ,2			SN74LS145N	IC(BCD TO DECIMAL DECODER/DRIV		
Q1 ,2			2SA1162(Y)	TRANSISTOR		
Q3			2SC2712(Y)	TRANSISTOR		
Q4 ,5			2SK125-5	FET		
Q6			2SK520(K43)	FET		
Q7 -16			2SK520(K44)	FET		
Q17 -19			2SC2954	TRANSISTOR		
Q20 -22			3SK131(M)	FET		
Q23			DTC114EK	DIGITAL TRANSISTOR		
Q24 -28			DTC124EK	DIGITAL TRANSISTOR		
Q29 ,30			DTA114EK	DIGITAL TRANSISTOR		
Q31 -35			DTA124EK	DIGITAL TRANSISTOR		
Q37			2SC2712(Y)	TRANSISTOR		
TH1			112-302-2	THERMISTOR 3K		
TH2			157-101-55004	THERMISTOR 100		
FINAL UNIT (X45-3450-00)						
C1			CK45B1H222K	CERAMIC 2200PF K		
C2			CK45B1H102K	CERAMIC 1000PF K		
C3			C91-0119-05	CERAMIC 0.047UF K		
C4			CK45F1H103Z	CERAMIC 0.010UF Z		
C5 ,6			CK45F1H223Z	CERAMIC 0.022UF Z		
C7			CE04EW1H100M	ELECTRO 10UF 50WV		
C8			CE04EW1H471M	ELECTRO 470UF 50WV		
C9 ,10			CK45F1H223Z	CERAMIC 0.022UF Z		
C11			C91-0119-05	CERAMIC 0.047UF K		
C12			CE04EW1H100M	ELECTRO 10UF 50WV		
C13 ,14			CE04EW1H101M	ELECTRO 100UF 50WV		
C15			CK45F1H223Z	CERAMIC 0.022UF Z		
C16			CC45SL2H121J	CERAMIC 120PF J		
C18			CK45B1H102K	CERAMIC 1000PF K		
C19			CK45F1H223Z	CERAMIC 0.022UF Z		
C25 -30			CK45B2H103K	CERAMIC 0.010UF K		
C31			CK45B1H102K	CERAMIC 1000PF K		
C33			CK45B1H222K	CERAMIC 2200PF K		
C34			CK45B2H103K	CERAMIC 0.010UF K		
C35			C90-2121-05	ERECTRO 2200 80WV		
C36			CE04EW1E471M	ELECTRO 470UF 25WV		
C37			CK45F1H223Z	CERAMIC 0.022UF Z		
C38 ,39		*	C93-0519-05	CERAMIC 0.001 200WV		
C40 ,41			CK45B2H103K	CERAMIC 0.010UF K		
C42 -45			CK45F1H103Z	CERAMIC 0.010UF Z		
C46 ,47			CK45B2H103K	CERAMIC 0.010UF K		
C48			C91-0119-05	CERAMIC 0.047UF K		
C49			CE04EW1H100M	ELECTRO 10UF 50WV		
C50			C91-0119-05	CERAMIC 0.047UF K		
C51			CE04EW1H100M	ELECTRO 10UF 50WV		
CN1			E40-0470-05	PIN CONNECTOR(4P)		
CN2			E40-0370-05	PIN CONNECTOR(3P)		
CN3			E40-3239-05	PIN CONNECTOR(4P)		
CN4			E40-3238-05	PIN CONNECTOR(3P)		
CN5			E40-3237-05	PIN CONNECTOR(2P)		
CN6			E04-0154-05	RF COAXIAL JACK		

L:Scandinavia K:USA P:Canada
Y:PX(Far East, Hawaii) T:England E:Europe
Y:AAFES(Europe) X:Australia M:Other Areas

⚠ indicates safety critical components.

PARTS LIST

× New Parts
Parts without Parts No. are not supplied.
Les articles non mentionnes dans le Parts No. ne sont pas fournis.
Teile ohne Parts No. werden nicht geliefert.

FINAL UNIT (X45-3450-00)

Ref. No. 参照番号	Address 位置	New Parts 新	Parts No. 部品番号	Description 部品名／規格	Destination 仕向	Remarks 備考
TP1 ,2			E40-0211-05	PIN CONNECTOR		
W1			E31-6038-05	CONNECTING WIRE		
301	3K		F01-0969-41	HEAT SINK		
302	2K		F29-0014-05	INSULATOR		
F1			F51-0016-05	FUSE(10A)		
303	1J		G02-0571-04	FLAT SPRING		
304	2K		G02-0702-04	FLAT SPRING		
305	2J		J13-0055-15	FUSE HOLDER		
L1			L40-1001-14	SMALL FIXED INDUCTOR(10UH)		
L2			L19-0315-25	BALUN TRANSFORMER		
L3			L39-0476-05	TROIDAL COIL		
L4			L39-0477-05	TROIDAL COIL		
L5			L39-1238-05	TROIDAL COIL		
L6 ,7			L39-0424-05	TROIDAL COIL		
L8			L33-0617-05	RFC		
L9			L33-0699-05	CHOKE COIL		
L10			L40-3391-14	SMALL FIXED INDUCTOR(3.3UH)		
L11			L33-0699-05	CHOKE COIL		
L12 ,13			L33-0726-05	CHOKE COIL		
L14 -17			L33-0699-05	CHOKE COIL		
L18 -21			L40-1011-14	SMALL FIXED INDUCTOR(100UH)		
L22 ,23			L33-0651-05	CHOKE COIL		
BC	2K		N09-2120-04	SCREW (OTHERS)		
BE	1J,2J		N30-3008-46	PAN HEAD MACHIN SCREW		
BF	2J		N30-3010-46	PAN HEAD MACHIN SCREW		
S	2K,2J		N87-3008-46	BRAZIER HEAD TAPTITE SCREW		
R2			RD14BB2C560J	RD 56 J 1/6W		
R3			RD14BB2C681J	RD 680 J 1/6W		
R4			RD14BB2C221J	RD 220 J 1/6W		
R5			RC05GF2H3R9J	RC 3.9 J 1/2W		
R6			RD14CB2C331J	RD 330 J 1/6W		
R8 ,9			RD14CB2E150J	RD 15 J 1/4W		
R10 ,11			RC05GF2H181J	RC 180 J 1/2W		
R13 ,14			RC05GF2H100J	RC 10 J 1/2W		
R15 ,16			RC05GF2H220J	RC 22 J 1/2W		
R17 ,18			RC05GF2H101J	RC 100 J 1/2W		
R19 ,20			RC05GF2H100J	RC 10 J 1/2W		
R21			RD14BB2C681J	RD 680 J 1/6W		
R22			RD14BB2C561J	RD 560 J 1/6W		
R23			RS14DB3A390J	FL-PROOF RS 39 J 1W		
R24			RD14BB2C273J	RD 27K J 1/6W		
R25			RD14BB2C104J	RD 100K J 1/6W		
R26 ,27			RS14DB3D121J	FL-PROOF RS 120 J 2W		
R28			RD14BB2C473J	RD 47K J 1/6W		
R29			RD14BB2C474J	RD 470K J 1/6W		
R30 ,31			RD14BB2C473J	RD 47K J 1/6W		
R32			RD14BB2C223J	RD 22K J 1/6W		
R33			RS14DB3A562J	FL-PROOF RS 5.6K J 1W		
R34			RD14BB2C152J	RD 1.5K J 1/6W		
R35			RD14BB2C103J	RD 10K J 1/6W		
R36			RS14DB3A560J	FL-PROOF RS 56 J 1W		

L:Scandinavia K:USA P:Canada
Y:PX(Far East, Hawaii) T:England E:Europe
Y:AAFES(Europe) X:Australia M:Other Areas

⚠ indicates safety critical components.

PARTS LIST

* New Parts
Parts without Parts No. are not supplied.
Les articles non mentionnes dans le Parts No. ne sont pas fournis.
Teile ohne Parts No. werden nicht geliefert.

FINAL UNIT (X45-3450-00)
DIGITAL UNIT (X46-313X-XX)

Ref. No. 参照番号	Address 位置	New Parts 新	Parts No. 部品番号	Description 部品名／規格	Destination 仕向	Remarks 備考
R37			R92-1251-05	RESISTOR 0HM		
R38			R92-1247-05	RESISTOR 0HM		
R39			RD14BB2C332J	RD 3.3K J 1/6W		
R40			RD14BB2C103J	RD 10K J 1/6W		
VR1			R12-1083-05	TRIM POT. 1K		
VR3 -5			R12-1083-05	TRIM POT. 1K		
W2			R92-0150-05	JUMPER REST 0 0HM		
S1			S59-1413-05	THERMAL SWITCH(50°C)		
S2			S59-1414-05	THERMAL SWITCH(70°C)		
S3			S59-1415-05	THERMAL SWITCH(90°C)		
D1			MA27T-B	DIODE		
D2			SV03YS	DIODE		
D3			MTZ4.3JB	ZENER DIODE		
D4			MTZ4.7JC	ZENER DIODE		
D5 ,6			1S1555	DIODE		
D7			MC921	DIODE		
D8			MTZ8.2JC	ZENER DIODE		
D9			1S1555	DIODE		
D10			UZP4.7B	ZENER DIODE(4.7V)		
D11			SV03YS	DIODE		
D12 ,13			1SS133	DIODE		
Q1			2SC1971	TRANSISTOR		
Q2 ,3			2SC3133	TRANSISTOR		
Q4		*	MRF150MP	TRANSISTOR		
Q6			2SD1406(Y)	TRANSISTOR		
Q8			2SC2922	TRANSISTOR		
Q9			2SB861(C)	TRANSISTOR		
Q10			2SC2459(BL)	TRANSISTOR		
Q11			DTC124ES	DIGITAL TRANSISTOR		
Q12			DTC143TS	DIGITAL TRANSISTOR		
Q13			2SA562(Y)	TRANSISTOR		
Q14			DTC124ES	DIGITAL TRANSISTOR		
Q15			DTA124ES	DIGITAL TRANSISTOR		
Q16			DTC124ES	DIGITAL TRANSISTOR		
Q17			2SA562(Y)	TRANSISTOR		
Q18 ,19			2SD1406(Y)	TRANSISTOR		
			212-1022-05	PLASTIC TUBE		
DIGITAL UNIT (X46-313X-XX) 0-11 : K, P 0-21 : M 0-71 : X 2-71 : E, E3, T 2-72 : E2						
C1 -20			CK73FB1E103K	CHIP C 0.01UF K		
C21 -23			CK73FB1E103K	CHIP C 0.01UF K		
C24 -27			CK73FF1E104Z	CHIP C 0.1UF Z		
C28 -37			CK73FB1E103K	CHIP C 0.01UF K		
C38 ,39			CK73FF1E104Z	CHIP C 0.1UF Z		
C40 -48			CK73FB1E103K	CHIP C 0.01UF K		
C49 ,50			CK73FF1E104Z	CHIP C 0.1UF Z		
C51 -64			CK73FB1H102K	CHIP C 1000PF K		
C65 ,66			CK73FB1E103K	CHIP C 0.01UF K		
C71 -75			CK73FB1E103K	CHIP C 0.01UF K		
C76			CK73FF1E104Z	CHIP C 0.1UF Z		
C77 -84			CK73FB1E103K	CHIP C 0.01UF K		
C85 -87			CK73FB1H102K	CHIP C 1000PF K		
C88 -94			CK73FB1E103K	CHIP C 0.01UF K		
C95 -98			CK73FB1H102K	CHIP C 1000PF K		

L:Scandinavia K:USA P:Canada
Y:PX(Far East, Hawaii) T:England E:Europe
Y:AAFES(Europe) X:Australia M:Other Areas

⚠ indicates safety critical components.

PARTS LIST

* New Parts
Parts without Parts No. are not supplied.
Les articles non mentionnes dans le Parts No. ne sont pas fournis.
Teile ohne Parts No. werden nicht geliefert.

DIGITAL UNIT (X46-313X-XX)

Ref. No. 参照番号	Address 位置	New Parts 新	Parts No. 部品番号	Description 部品名／規格			Destination 仕向	Remarks 備考
C99			CK73FB1E103K	CHIP C	0.01UF	K		
C100			CK73FF1E104Z	CHIP C	0.1UF	Z		
C101			CE04EW1C101M	ELECTRO	100UF	16WV		
C102-110			CK73FB1H102K	CHIP C	1000PF	K		
C111-118			CK73FB1H471K	CHIP C	470PF	K		
C119,120			CK73FB1E103K	CHIP C	0.01UF	K		
C121-128			CK73FB1H471K	CHIP C	470PF	K		
C129,130			CK73FB1E103K	CHIP C	0.01UF	K		
C131			CK73FF1E104Z	CHIP C	0.1UF	Z		
C132-134			CK73FB1E103K	CHIP C	0.01UF	K		
C135-138			CK73FB1H102K	CHIP C	1000PF	K		
C139-146			CK73FB1E103K	CHIP C	0.01UF	K		
C147			CK73FB1H102K	CHIP C	1000PF	K		
C148,149			CK73FB1E103K	CHIP C	0.01UF	K		
C150-154			CK73FB1H102K	CHIP C	1000PF	K		
C155,156			CK73FB1E103K	CHIP C	0.01UF	K		
C157-160			CK73FB1H102K	CHIP C	1000PF	K		
C168-175			CK73FB1H102K	CHIP C	1000PF	K		
C176,177			CC73FCH1H100D	CHIP C	10PF	D		
C178-189			CK73FB1H331K	CHIP C	330PF	K		
C190-196			CC73FSL1H101J	CHIP C	100PF	J		
C197			CE04EW1C101M	ELECTRO	100UF	16WV		
C198			CK73FF1E104Z	CHIP C	0.1UF	Z		
C199			CK73FB1E103K	CHIP C	0.01UF	K		
C200			CE04EW1C101M	ELECTRO	100UF	16WV		
C201			CK73FF1E104Z	CHIP C	0.1UF	Z		
C202			CK73FB1E103K	CHIP C	0.01UF	K		
C203			CK73FB1H102K	CHIP C	1000PF	K		
C204			CE04EW1C101M	ELECTRO	100UF	16WV		
C205			CK73FF1E104Z	CHIP C	0.1UF	Z		
C206-209			CK73FB1H102K	CHIP C	1000PF	K		
C210			CE04EW1C470M	ELECTRO	47UF	16WV		
C211			CK73FF1E104Z	CHIP C	0.1UF	Z		
C212			CE04EW1C101M	ELECTRO	100UF	16WV		
C213			CK73FF1E104Z	CHIP C	0.1UF	Z		
C214			CK73FB1E103K	CHIP C	0.01UF	K		
C215			CK73FF1E104Z	CHIP C	0.1UF	Z		
C216,217			CK73FB1H102K	CHIP C	1000PF	K		
C219			CK73FF1E104Z	CHIP C	0.1UF	Z		
C221			CK73FF1E104Z	CHIP C	0.1UF	Z		
C222			CK73FB1H102K	CHIP C	1000PF	K		
C223			CK73FB1E103K	CHIP C	0.01UF	K		
C224-229			CK73FB1H102K	CHIP C	1000PF	K		
C231,232			CK73FB1H102K	CHIP C	1000PF	K		
C233			CE04EW1C470M	ELECTRO	47UF	16WV		
C234			CK73FF1E104Z	CHIP C	0.1UF	Z		
C235-238			CK73FB1H102K	CHIP C	1000PF	K		
C239,240			CK73FF1E104Z	CHIP C	0.1UF	Z		
C241			CK73FB1E103K	CHIP C	0.01UF	K		
C242-249			CK73FB1H331K	CHIP C	330PF	K		
C250,251			CK73FF1E104Z	CHIP C	0.1UF	Z		
C252,253			CK73FB1E103K	CHIP C	0.01UF	K		
C254,255			CK73FF1E104Z	CHIP C	0.1UF	Z		
C256			CK73FB1E103K	CHIP C	0.01UF	K		
C257-259			CK73FF1E104Z	CHIP C	0.1UF	Z		

L:Scandinavia K:USA P:Canada
Y:PX(Far East, Hawaii) T:England E:Europe
Y:AAFES(Europe) X:Australia M:Other Areas

⚠ indicates safety critical components.

TS-950SDX

PARTS LIST

⁎ New Parts
Parts without Parts No. are not supplied.
Les articles non mentionnes dans le Parts No. ne sont pas fournis.
Teile ohne Parts No. werden nicht geliefert.

DIGITAL UNIT (X46-313X-XX)

Ref. No. 参照番号	Address 位置	New Parts 新	Parts No. 部品番号	Description 部品名／規格	Destination 仕向	Remarks 備考
C260			CE04EW1C101M	ELECTRO 100UF 16WV		
C261			C90-2041-05	ERECTRO 10UF 10WV		
C262			CK73FF1E104Z	CHIP C 0.1UF Z		
C263,264			CK73FB1E103K	CHIP C 0.01UF K		
C265			CK73FF1E104Z	CHIP C 0.1UF Z		
C266			CE04EW1C101M	ELECTRO 100UF 16WV		
C267-274			CC73FSL1H101J	CHIP C 100PF J		
C275-282			CK73FB1H331K	CHIP C 330PF K		
C283			CC73FSL1H101J	CHIP C 100PF J		
C284			CK73FF1E104Z	CHIP C 0.1UF Z		
C285,286			CK73FB1E103K	CHIP C 0.01UF K		
C287,288			CK73FF1E104Z	CHIP C 0.1UF Z		
C289			CK73FB1E103K	CHIP C 0.01UF K		
C290-295			CK73FB1H102K	CHIP C 1000PF K		
C296			CK73FF1E104Z	CHIP C 0.1UF Z		
C298			CK73FB1H102K	CHIP C 1000PF K		
C299			CK73FF1E104Z	CHIP C 0.1UF Z		
C300,301			CK73FB1E103K	CHIP C 0.01UF K		
C302			CE04EW1C101M	ELECTRO 100UF 16WV		
C303			CK73FF1E104Z	CHIP C 0.1UF Z		
C305			CK73FB1E103K	CHIP C 0.01UF K		
C306			CK73FF1E104Z	CHIP C 0.1UF Z		
C307			CQ92M1H563K	MYLAR 0.056UF K		
C308,309			CK73FB1E103K	CHIP C 0.01UF K		
C311			CE04EW1C470M	ELECTRO 47UF 16WV		
C312			CK73FB1E103K	CHIP C 0.01UF K		
C313			CK73FF1E104Z	CHIP C 0.1UF Z		
C314,315			CK73FB1E103K	CHIP C 0.01UF K		
C316,317			CC73FCH1H220J	CHIP C 22PF J		
C320			CC73FSL1H101J	CHIP C 100PF J		
C321,322			CE04EW1C470M	ELECTRO 47UF 16WV		
C323-325			CK73FB1E103K	CHIP C 0.01UF K		
CN1			E40-3242-05	PIN CONNECTOR(7P)		
CN2			E40-3241-05	PIN CONNECTOR(6P)		
CN3			E40-3240-05	PIN CONNECTOR(5P)		
CN4			E40-3239-05	PIN CONNECTOR(4P)		
CN5			E40-3238-05	PIN CONNECTOR(3P)		
CN6			E40-5349-05	FLAT CABLE CONNECTOR(16P)		
CN7			E40-5334-05	FLAT CABLE CONNECTOR(24P)		
CN8			E40-5333-05	FLAT CABLE CONNECTOR(14P)		
CN9			E40-3240-05	PIN CONNECTOR(5P)		
CN10			E40-3238-05	PIN CONNECTOR(3P)		
CN12			E40-5467-05	FLAT CABLE CONNECTOR(10P)		
CN13			E40-5426-05	FLAT CABLE CONNECTOR(20P)		
CN14			E40-5333-05	FLAT CABLE CONNECTOR(14P)		
CN15			E40-3237-05	PIN CONNECTOR(2P)		
CN16			E40-3238-05	PIN CONNECTOR(3P)		
CN17			E40-3242-05	PIN CONNECTOR(7P)		
CN18			E40-3243-05	PIN CONNECTOR(8P)		
CN19			E40-3238-05	PIN CONNECTOR(3P)		
CN20			E40-3237-05	PIN CONNECTOR(2P)		
CN21			E40-3241-05	PIN CONNECTOR(6P)		
CN22			E40-3242-05	PIN CONNECTOR(7P)		

L:Scandinavia K:USA P:Canada
Y:PX(Far East, Hawaii) T:England E:Europe
Y:AAFES(Europe) X:Australia M:Other Areas

⚠ indicates safety critical components.

PARTS LIST

* New Parts
Parts without Parts No. are not supplied.
Les articles non mentionnes dans le Parts No. ne sont pas fournis.
Teile ohne Parts No. werden nicht geliefert.

DIGITAL UNIT (X46-313X-XX)

Ref. No. 参照番号	Address 位置	New Parts 新	Parts No. 部品番号	Description 部品名／規格	Destination 仕向	Remarks 備考
CN23			E40-3237-05	PIN CONNECTOR(2P)		
CN24			E40-3240-05	PIN CONNECTOR(5P)		
CN26			E40-3238-05	PIN CONNECTOR(3P)		
CN27			E40-3239-05	PIN CONNECTOR(4P)		
CN28			E40-5068-05	PIN CONNECTOR(11P)		
CN29			E40-3241-05	PIN CONNECTOR(6P)		
CN30,31			E40-3239-05	PIN CONNECTOR(4P)		
CN32			E40-3237-05	PIN CONNECTOR(2P)		
CN33			E40-3239-05	PIN CONNECTOR(4P)		
CN35			E02-2009-05	SOCKET FOR SEMICON.(28P ROM)		
CN36			E40-3239-05	PIN CONNECTOR(4P)		
CN37			E40-3240-05	PIN CONNECTOR(5P)		
CN38			E40-3239-05	PIN CONNECTOR(4P)		
CN39			E40-3237-05	PIN CONNECTOR(2P)		
L1 -6			L40-2211-48	SMALL FIXED INDUCTOR(220UH)		
L8 ,9			L40-2211-48	SMALL FIXED INDUCTOR(220UH)		
L11 ,12			L40-1011-48	SMALL FIXED INDUCTOR(100UH)		
L14 -19			L40-1011-48	SMALL FIXED INDUCTOR(100UH)		
L20			L40-1011-12	SMALL FIXED INDUCTOR(100UH)		
L21			L40-4711-12	SMALL FIXED INDUCTOR(470UH)		
L22 ,23			L40-1011-15	SMALL FIXED INDUCTOR(100UH)		
L24			L40-1011-12	SMALL FIXED INDUCTOR(100UH)		
L26 ,27			L40-1092-12	SMALL FIXED INDUCTOR(1UH)		
L29 -31			L40-1011-48	SMALL FIXED INDUCTOR(100UH)		
L33			L40-1011-48	SMALL FIXED INDUCTOR(100UH)		
L35			L40-1011-48	SMALL FIXED INDUCTOR(100UH)		
L38			L40-1011-48	SMALL FIXED INDUCTOR(100UH)		
L40 ,41			L40-1011-48	SMALL FIXED INDUCTOR(100UH)		
L43			L40-1011-12	SMALL FIXED INDUCTOR(100UH)		
L44 ,45			L40-4711-12	SMALL FIXED INDUCTOR(470UH)		
L46			L40-1011-12	SMALL FIXED INDUCTOR(100UH)		
L47			L40-4711-12	SMALL FIXED INDUCTOR(470UH)		
L48			L40-1011-12	SMALL FIXED INDUCTOR(100UH)		
L49			L40-1011-48	SMALL FIXED INDUCTOR(100UH)		
L50 ,51			L40-2282-48	SMALL FIXED INDUCTOR(0.22UH)		
L53 ,54			L40-1011-12	SMALL FIXED INDUCTOR(100UH)		
L55 -61			L40-1011-48	SMALL FIXED INDUCTOR(100UH)		
X1			L77-1380-05	CRYSTAL RESONATOR(11.0592MHZ)		
X2			L77-1333-05	CRYSTAL RESONATOR(4.194304MHZ)		
CP1			R90-0598-05	MULTI-COMP 10K/20K		
CP2			R90-0455-05	MULTI-COMP 4.7KX8 J 1/4W		
R1			RK73FB2A103J	CHIP R 10K J 1/10W		
R2 ,3			RK73FB2A104J	CHIP R 100K J 1/10W		
R4 ,5			RK73FB2A103J	CHIP R 10K J 1/10W		
R6			RK73FB2A102J	CHIP R 1.0K J 1/10W		
R7 ,8			RK73FB2A471J	CHIP R 470 J 1/10W		
R9 -18			RK73FB2A101J	CHIP R 100 J 1/10W		
R19 -21			RK73FB2A102J	CHIP R 1.0K J 1/10W		
R22 -24			RK73FB2A103J	CHIP R 10K J 1/10W		
R25 -30			RK73FB2A101J	CHIP R 100 J 1/10W		
R31 -33			RK73FB2A223J	CHIP R 22K J 1/10W		
R34 -37			RK73FB2A102J	CHIP R 1.0K J 1/10W		
R38 -40			RK73FB2A103J	CHIP R 10K J 1/10W		

L:Scandinavia K:USA P:Canada
Y:PX(Far East, Hawaii) T:England E:Europe
Y:AAFES(Europe) X:Australia M:Other Areas

⚠ indicates safety critical components.

TS-950SDX

PARTS LIST

× New Parts
Parts without Parts No. are not supplied.
Les articles non mentionnes dans le Parts No. ne sont pas fournis.
Teile ohne Parts No. werden nicht geliefert.

DIGITAL UNIT (X46-313X-XX)

Ref. No. 参照番号	Address 位置	New Parts 新	Parts No. 部品番号	Description 部品名／規格	Destination 仕向	Remarks 備考
R41 -54			RK73FB2A101J	CHIP R 100 J 1/10W		
R55 ,56			RK73FB2A102J	CHIP R 1.0K J 1/10W		
R61 -65			RK73FB2A102J	CHIP R 1.0K J 1/10W		
R66 -71			RK73FB2A101J	CHIP R 100 J 1/10W		
R74 -76			RK73FB2A101J	CHIP R 100 J 1/10W		
R77			RK73FB2A223J	CHIP R 22K J 1/10W		
R78			RK73FB2A103J	CHIP R 10K J 1/10W		
R79 -82			RK73FB2A221J	CHIP R 220 J 1/10W		
R84 -88			RK73FB2A101J	CHIP R 100 J 1/10W		
R90 -108			RK73FB2A101J	CHIP R 100 J 1/10W		
R109-118			RK73FB2A103J	CHIP R 10K J 1/10W		
R119,120			RK73FB2A102J	CHIP R 1.0K J 1/10W		
R121-124			RK73FB2A101J	CHIP R 100 J 1/10W		
R125-129			RK73FB2A102J	CHIP R 1.0K J 1/10W		
R130			RK73FB2A223J	CHIP R 22K J 1/10W		
R131			RK73FB2A103J	CHIP R 10K J 1/10W		
R132,133			RK73FB2A101J	CHIP R 100 J 1/10W		
R134,135			RK73FB2A103J	CHIP R 10K J 1/10W		
R136-142			RK73FB2A101J	CHIP R 100 J 1/10W		
R143,144			RK73FB2A102J	CHIP R 1.0K J 1/10W		
R145-154			RK73FB2A101J	CHIP R 100 J 1/10W		
R155-162			RK73FB2A104J	CHIP R 100K J 1/10W		
R163-165			RK73FB2A103J	CHIP R 10K J 1/10W		
R166			RK73FB2A102J	CHIP R 1.0K J 1/10W		
R167,168			RK73FB2A101J	CHIP R 100 J 1/10W		
R169-172			RK73FB2A102J	CHIP R 1.0K J 1/10W		
R175-180			RK73FB2A101J	CHIP R 100 J 1/10W		
R185,186			RK73FB2A222F	CHIP R 2.2K F 1/10W		
R187-198			RK73FB2A472J	CHIP R 4.7K J 1/10W		
R200			RK73FB2A103J	CHIP R 10K J 1/10W		
R201			RK73FB2A472J	CHIP R 4.7K J 1/10W		
R202			RK73FB2A103J	CHIP R 10K J 1/10W		
R203			RK73FB2A332J	CHIP R 3.3K J 1/10W		
R204			RK73FB2A471J	CHIP R 470 J 1/10W		
R205-226			RK73FB2A103J	CHIP R 10K J 1/10W		
R227			RK73FB2A104J	CHIP R 100K J 1/10W		
R228			RK73FB2A153J	CHIP R 15K J 1/10W		
R229			RK73FB2A103J	CHIP R 10K J 1/10W		
R230,231			RK73FB2A102J	CHIP R 1.0K J 1/10W		
R232,233			RK73FB2A472J	CHIP R 4.7K J 1/10W		
R234,235			RK73FB2A101J	CHIP R 100 J 1/10W		
R237			RK73FB2A101J	CHIP R 100 J 1/10W		
R238,239			RK73FB2A223J	CHIP R 22K J 1/10W		
R241			RK73FB2A103J	CHIP R 10K J 1/10W		
R242			RK73FB2A102J	CHIP R 1.0K J 1/10W		
R252			R92-0670-05	CHIP R 0 OHM		
R243, 245			RK73FB2A223J	CHIP R 22K J 1/10W		
R244			RK73FB2A103J	CHIP R 10K J 1/10W		
R246			RK73FB2A101J	CHIP R 100 J 1/10W		
R247-250			RK73FB2A103J	CHIP R 10K J 1/10W		
R251			RK73FB2A223J	CHIP R 22K J 1/10W		
R253			R92-0679-05	CHIP R 0 OHM		
VR1			R12-1064-05	TRIM POT. 1K		
D4		*	MA112	DIODE		
D7 ,8		*	MA112	DIODE		
D11 -13			1SS133	DIODE	EE3T	

L:Scandinavia K:USA P:Canada
Y:PX(Far East, Hawaii) T:England E:Europe
Y:AAFES(Europe) X:Australia M:Other Areas

⚠ indicates safety critical components.

PARTS LIST

* New Parts
Parts without Parts No. are not supplied.
Les articles non mentionnes dans le Parts No. ne sont pas fournis.
Teile ohne Parts No. werden nicht geliefert.

DIGITAL UNIT (X46-313X-XX)
IF UNIT (X48-3100-00)

Ref. No. 参照番号	Address 位置	New Parts 新	Parts No. 部品番号	Description 部品名／規格	Destination 仕向	Remarks 備考
D15 -17			1SS133	DIODE		
D18		*	MA112	DIODE	X	
D20 -22		*	MA112	DIODE		
D23			02CZ5.1	DIODE		
IC1		*	NM93C66EM83	IC(EEPROM)		
IC2			NJM2904M	IC(OP AMP X2)		
IC2			LM2904M	IC(OP AMP X2)		
IC3			MB89363B	IC(I/O INTERFACE)		
IC4 ,5			TC4S81F	IC(UNLOCK COMPALETER)		
IC6 ,7			MB89363B	IC(I/O INTERFACE)		
IC8			UPD78C10AGQ-36	IC(CPU)		
IC9			SN74AS04NS	IC(INVERTER)		
IC10			MB4052	IC(4CH 8BIT A/D CONVERTER(ADC)		
IC11			TC4053BF	IC(3-INPUT 2CH MPX/DE-MPX)		
IC12			TC74HC573AF	IC(LATCH)		
IC13			TC7S08F	IC(2CH NAND GATE)		
IC14			TC74HC138AF	IC(DECODER)		
IC15			TC74HC148AF	IC(TO 3)		
IC16			TC74HC138AF	IC(DECODER)		
IC17			MB3780A	IC(BACK UP,RESET)		
IC18			LC3564PML-12	IC(RAM)		
IC20,21			LZ92K371	IC(ENCODER PROCESSOR)		
IC22			TC4584BF	IC(BUFF)		
IC23			TC4011BF	IC(NAND X4)		
IC24			75004GB-746-3B4	IC(UPD)		
IC25		*	NM93C66EM83	IC(EEPROM)		
IC26			TC4SU69F	IC(INVERTER GATE)		
Q1			DTC143EK	DIGITAL TRANSISTOR		
Q2 ,3			FMG1	DIGITAL TRANSISTOR		
Q4			DTC143EK	DIGITAL TRANSISTOR		
Q5 ,6			FMG1	DIGITAL TRANSISTOR		
Q7 ,8			FMC3	DIGITAL TRANSISTOR		
Q9 ,10			DTC143EK	DIGITAL TRANSISTOR		
Q11 -13			FMC3	DIGITAL TRANSISTOR		
Q14			DTC143EK	DIGITAL TRANSISTOR		
Q15 -21			FMG1	DIGITAL TRANSISTOR		
Q22 ,23			DTC143EK	DIGITAL TRANSISTOR		
Q25			FMC3	DIGITAL TRANSISTOR		
BA1			W09-0514-05	LITHIUM BATTERY		
IF UNIT (X48-3100-00)						
C1			CK73FB1H222K	CHIP C 2200PF K		
C2			CK73FF1E104Z	CHIP C 0.1UF Z		
C3 ,4			CK73FB1H222K	CHIP C 2200PF K		
C5			CK73FB1H102K	CHIP C 1000PF K		
C6 -10			CK73FB1E103K	CHIP C 0.01UF K		
C11			CK73FB1E223K	CHIP C 0.022UF K		
C12			CK73FB1H222K	CHIP C 2200PF K		
C13			CK73FB1E103K	CHIP C 0.01UF K		
C14			CC73FCH1H100D	CHIP C 10PF D		
C15 -19			CK73FB1E103K	CHIP C 0.01UF K		
C20			CC73FCH1H101J	CHIP C 100PF J		
C21 -23			CK73FB1E103K	CHIP C 0.01UF K		
C24			CK73FF1E104Z	CHIP C 0.1UF Z		
C25			CE04EW1C470M	ELECTRO 47UF 16WV		

L:Scandinavia K:USA P:Canada
Y:PX(Far East, Hawaii) T:England E:Europe
Y:AAFES(Europe) X:Australia M:Other Areas

⚠ indicates safety critical components.

TS-950SDX

PARTS LIST

× New Parts
Parts without Parts No. are not supplied.
Les articles non mentionnes dans le Parts No. ne sont pas fournis.
Teile ohne Parts No. werden nicht geliefert.

IF UNIT (X48-3100-00)

Ref. No. 参照番号	Address 位置	New Parts 新	Parts No. 部品番号	Description 部品名／規格			Destination 仕向	Remarks 備考
C26			CK73FB1E223K	CHIP C	0.022UF	K		
C27			CK73EF1E474Z	CHIP C	0.47UF	Z		
C28			CE04EW1C100M	ELECTRO	10UF	16WV		
C29			CK73FB1H102K	CHIP C	1000PF	K		
C30			CC73FSL1H221J	CHIP C	220PF	J		
C31			CK73FB1E103K	CHIP C	0.01UF	K		
C32			CE04EW1H2R2M	ELECTRO	2.2UF	50WV		
C33			CE04EW1C220M	ELECTRO	22UF	16WV		
C34 -37			CK73FB1H222K	CHIP C	2200PF	K		
C38 ,39			CK73FB1H102K	CHIP C	1000PF	K		
C40			CC73FCH1H020C	CHIP C	2.0PF	C		
C41			CC73FCH1H050C	CHIP C	5PF	C		
C42			CC73FCH1H1R5C	CHIP C	1.5PF	C		
C43			CC73FCH1H010C	CHIP C	1PF	C		
C44			CK73FB1H102K	CHIP C	1000PF	K		
C45			CK73FF1E104Z	CHIP C	0.1UF	Z		
C46 -48			CK73FB1H102K	CHIP C	1000PF	K		
C49 ,50			CK73FB1E103K	CHIP C	0.01UF	K		
C51			CK73FB1H102K	CHIP C	1000PF	K		
C52			CK73FB1E103K	CHIP C	0.01UF	K		
C53 ,54			CC73FCH1H220J	CHIP C	22PF	J		
C55			CK73FB1E103K	CHIP C	0.01UF	K		
C56			CC73FCH1H101J	CHIP C	100PF	J		
C58			CK73FB1E103K	CHIP C	0.01UF	K		
C59			CC73FCH1H100D	CHIP C	10PF	D		
C60			CK73FB1E223K	CHIP C	0.022UF	K		
C61			CC73FSL1H221J	CHIP C	220PF	J		
C62			CC73FCH1H470J	CHIP C	47PF	J		
C63 ,64			CK73FB1E223K	CHIP C	0.022UF	K		
C65			CC73FCH1H330J	CHIP C	33PF	J		
C66			CC73FCH1H100D	CHIP C	10PF	D		
C67 -71			CK73FB1H102K	CHIP C	1000PF	K		
C72			CC73FCH1H470J	CHIP C	47PF	J		
C73			CK73FB1E103K	CHIP C	0.01UF	K		
C74			CK73FB1H102K	CHIP C	1000PF	K		
C75			CK73FF1E473Z	CHIP C	0.047UF	Z		
C76			CK73FB1E103K	CHIP C	0.01UF	K		
C77			CE04EW1H010M	ELECTRO	1.0UF	50WV		
C78 -82			CK73FB1E103K	CHIP C	0.01UF	K		
C83			CK73FB1H102K	CHIP C	1000PF	K		
C84 ,85			CK73FF1E104Z	CHIP C	0.1UF	Z		
C86 ,87			CK73FB1E103K	CHIP C	0.01UF	K		
C88 -90			CK73FB1H102K	CHIP C	1000PF	K		
C91			CK73FF1E104Z	CHIP C	0.1UF	Z		
C92 -99			CK73FB1E103K	CHIP C	0.01UF	K		
C100			CC73FCH1H020C	CHIP C	2.0PF	C		
C101-102			CK73FB1E103K	CHIP C	0.01UF	K		
C103,104			CK73FB1E103K	CHIP C	0.01UF	K		
C106-110			CK73FF1E104Z	CHIP C	0.1UF	Z		
C112			CK73EF1E474Z	CHIP C	0.47UF	Z		
C113-130			CK73FB1E103K	CHIP C	0.01UF	K		
C131,132			CK73FF1E473Z	CHIP C	0.047UF	Z		
C133			CC73FCH1H101J	CHIP C	100PF	J		
C134			CK73FF1E473Z	CHIP C	0.047UF	Z		
C135-141			CK73FB1E103K	CHIP C	0.01UF	K		

L:Scandinavia K:USA P:Canada
Y:PX(Far East, Hawaii) T:England E:Europe
Y:AAFES(Europe) X:Australia M:Other Areas

⚠ indicates safety critical components.

PARTS LIST

× New Parts
Parts without Parts No. are not supplied.
Les articles non mentionnes dans le Parts No. ne sont pas fournis.
Teile ohne Parts No. werden nicht geliefert.

IF UNIT (X48-3100-00)

Ref. No. 参照番号	Address 位置	New Parts 新	Parts No. 部品番号	Description 部品名／規格	Destination 仕向	Remarks 備考
C142			CC73FCH1H101J	CHIP C 100PF J		
C143-147			CK73FB1H102K	CHIP C 1000PF K		
C148			CK73FB1E103K	CHIP C 0.01UF K		
C149			CK45E2H222P	CERAMIC 2200PF P		
C150-152			CK73FB1H102K	CHIP C 1000PF K		
C153			CC73FCH1H101J	CHIP C 100PF J		
C154,155			CK73FF1E104Z	CHIP C 0.1UF Z		
C156			CC73FCH1H101J	CHIP C 100PF J		
C157			CE04EW1C101M	ELECTRO 100UF 16WV		
C158			CK73FF1E104Z	CHIP C 0.1UF Z		
C159			CE04EW1C100M	ELECTRO 10UF 16WV		
C161			CK73EF1C105Z	CHIP C 1.0UF Z		
C162			CK73FB1E103K	CHIP C 0.01UF K		
C163-165			CK73FB1H102K	CHIP C 1000PF K		
C166			CC73FCH1H220J	CHIP C 22PF J		
C167			CK73FF1E104Z	CHIP C 0.1UF Z		
C168-175			CK73FB1H102K	CHIP C 1000PF K		
C176,177			CC73FCH1H220J	CHIP C 22PF J		
C178			CC73FSL1H221J	CHIP C 220PF J		
C179			CK73EB1H104K	CHIP C 0.10UF K		
C180			CE04EW1C101M	ELECTRO 100UF 16WV		
C300-302			CK73FB1E103K	CHIP C 0.01UF K		
C303			CC73FCH1H100D	CHIP C 10PF D		
C304			CK73FB1E103K	CHIP C 0.01UF K		
C305			CC73FCH1H101J	CHIP C 100PF J		
C306			CC73FCH1H100D	CHIP C 10PF D		
C307-312			CK73FB1E103K	CHIP C 0.01UF K		
C313			CC73FCH1H050C	CHIP C 5PF C		
C315			CK73FB1E103K	CHIP C 0.01UF K		
C318			CK73FB1H102K	CHIP C 1000PF K		
C319			CC73FCH1H100D	CHIP C 10PF D		
C320			CK73FB1E103K	CHIP C 0.01UF K		
C321,322			CC73FCH1H100D	CHIP C 10PF D		
C323			CK73EB1E104K	CHIP C 0.10UF K		
C324,325			CK73FB1E103K	CHIP C 0.01UF K		
C326			CC73FCH1H150J	CHIP C 15PF J		
C327			CK73EF1E224Z	CHIP C 0.22UF Z		
CN1			E40-5067-05	PIN CONNECTOR(10P)		
CN2			E40-3237-05	PIN CONNECTOR(2P)		
CN3			E40-3238-05	PIN CONNECTOR(3P)		
CN4 -7			E04-0157-05	MINI PIN JACK A		
CN8			E40-3237-05	PIN CONNECTOR(2P)		
CN9			E04-0154-05	RF COAXIAL CABLE RECEPTACLE		
CN10			E40-3237-05	PIN CONNECTOR(2P)		
CN11			E40-3239-05	PIN CONNECTOR(4P)		
CN12			E23-0401-05	TERMINAL(1P)		
CN13			E40-3239-05	PIN CONNECTOR(4P)		
CN14			E40-5066-05	PIN CONNECTOR(9P)		
CN15			E40-5067-05	PIN CONNECTOR(10P)		
CN16			E40-3238-05	PIN CONNECTOR(3P)		
CN17			E40-3237-05	PIN CONNECTOR(2P)		
CN18			E40-3238-05	PIN CONNECTOR(3P)		
CN19			E40-3237-05	PIN CONNECTOR(2P)		
CN20			E40-3238-05	PIN CONNECTOR(3P)		

L:Scandinavia K:USA P:Canada
Y:PX(Far East, Hawaii) T:England E:Europe
Y:AAFES(Europe) X:Australia M:Other Areas

⚠ indicates safety critical components.

TS-950SDX

PARTS LIST

* New Parts
Parts without Parts No. are not supplied.
Les articles non mentionnes dans le Parts No. ne sont pas fournis.
Teile ohne Parts No. werden nicht geliefert.

IF UNIT (X48-3100-00)

Ref. No. 参照番号	Address 位置	New Parts 新	Parts No. 部品番号	Description 部品名／規格	Destination 仕向	Remarks 備考
CN21-24			E40-0511-05	PIN CONNECTOR(5P)		
CN25,26			E40-3237-05	PIN CONNECTOR(2P)		
J1			E11-0438-05	PHONE JACK(KEY)		
J2			E11-0414-05	PHONE JACK(EXT.SP)		
J3			E06-1352-05	DIN SOCKET(ACC2)		
J4			E13-0462-05	PHONO JACK(RCA 4P)		
J5			E06-0752-05	DIN CONNECTOR(REMOTO 7P)		
J6		*	E11-0449-05	PHONE JACK(3.5D,REMOTE.CON)		
TP1			E23-0467-05	TERMINAL		
TP3 ,4			E23-0467-05	TERMINAL		
W1 -3			E33-1893-15	FINISHED WIRE SET		
			J30-0545-05	SPACER		
			J32-0761-04	STUD		
CF1			L72-0351-05	CERAMIC FILTER(8.83MHZ)		
L1			L34-2267-05	TUNING COIL		
L2			L34-4205-05	TUNING COIL		
L3			L34-4025-05	TUNING COIL		
L4 -7			L30-0514-05	COIL		
L8			L34-4206-05	TUNING COIL		
L9 -11			L34-4006-05	TUNING COIL		
L12			L34-4209-05	TUNING COIL		
L13			L34-0943-05	TUNING COIL		
L14 ,15			L34-0942-05	TUNING COIL		
L16			L34-0943-05	TUNING COIL		
L17			L34-2124-05	TUNING COIL		
L18			L34-0536-05	TUNING COIL		
L19			L34-0781-05	TUNING COIL		
L20			L34-4210-05	TUNING COIL		
L21 ,22			L30-0281-15	IFT		
L23			L34-4190-05	TUNING COIL		
L24			L34-4207-05	TUNING COIL		
L25			L34-0943-05	TUNING COIL		
L26			L34-0781-05	TUNING COIL		
L27 -29			L34-0536-05	TUNING COIL		
L30			L34-0781-05	TUNING COIL		
L31			L34-0536-05	TUNING COIL		
L32			L40-1011-14	SMALL FIXED INDUCTOR(100UH)		
L33 -35			L40-1011-15	SMALL FIXED INDUCTOR(100UH)		
L37 ,38			L40-1011-15	SMALL FIXED INDUCTOR(100UH)		
L39 -41			L40-1011-14	SMALL FIXED INDUCTOR(100UH)		
L42			L40-1801-14	SMALL FIXED INDUCTOR(18UH)		
L43			L40-1021-14	SMALL FIXED INDUCTOR(1MH)		
L300,301			L34-0941-05	TUNING COIL		
XF1			L71-0249-05	CRYSTAL FILTER(10.695MHZ,SSB		
XF2			L71-0401-05	CRYSTAL FILTER(73.05MHZ,		
XF3			L71-0222-05	CRYSTAL FILTER(8.83MHZ,SSB2.7K		
XF4			L71-0266-05	CRYSTAL FILTER(8.83MHZ,AM)		
XF5			L71-0283-15	CRYSTAL FILTER(10.695MHZ,CW500		
			N30-3010-46	PAN HEAD MACHIN SCREW		
R1			RK73FB2A474J	CHIP R 470K J 1/10W		
R2			RK73FB2A183J	CHIP R 18K J 1/10W		
R3			RK73FB2A104J	CHIP R 100K J 1/10W		
R4			RK73FB2A471J	CHIP R 470 J 1/10W		

L:Scandinavia K:USA P:Canada
Y:PX(Far East, Hawaii) T:England E:Europe
Y:AAFES(Europe) X:Australia M:Other Areas

⚠ indicates safety critical components.

PARTS LIST

× New Parts
Parts without Parts No. are not supplied.
Les articles non mentionnes dans le Parts No. ne sont pas fournis.
Teile ohne Parts No. werden nicht geliefert.

IF UNIT (X48-3100-00)

Ref. No. 参照番号	Address 位置	New Parts 新	Parts No. 部品番号	Description 部品名／規格	Destination 仕向	Remarks 備考
R5			RK73FB2A221J	CHIP R 220 J 1/10W		
R6			RK73FB2A222J	CHIP R 2.2K J 1/10W		
R7			RK73FB2A472J	CHIP R 4.7K J 1/10W		
R8 ,9			RK73FB2A681J	CHIP R 680 J 1/10W		
R10			RK73FB2A101J	CHIP R 100 J 1/10W		
R11			RK73FB2A103J	CHIP R 10K J 1/10W		
R12			RK73FB2A472J	CHIP R 4.7K J 1/10W		
R13			RK73FB2A183J	CHIP R 18K J 1/10W		
R14 ,15			RK73FB2A104J	CHIP R 100K J 1/10W		
R16			RK73FB2A181J	CHIP R 180 J 1/10W		
R17			RK73FB2A221J	CHIP R 220 J 1/10W		
R18			RK73FB2A331J	CHIP R 330 J 1/10W		
R19			RK73FB2A103J	CHIP R 10K J 1/10W		
R20			RK73FB2A221J	CHIP R 220 J 1/10W		
R21			RK73FB2A103J	CHIP R 10K J 1/10W		
R22			RK73FB2A471J	CHIP R 470 J 1/10W		
R23			RK73FB2A472J	CHIP R 4.7K J 1/10W		
R24			RK73FB2A103J	CHIP R 10K J 1/10W		
R25			RK73FB2A472J	CHIP R 4.7K J 1/10W		
R26			RK73FB2A153J	CHIP R 15K J 1/10W		
R27			RK73FB2A104J	CHIP R 100K J 1/10W		
R28			RK73FB2A331J	CHIP R 330 J 1/10W		
R29			RK73FB2A221J	CHIP R 220 J 1/10W		
R30			RK73FB2A183J	CHIP R 18K J 1/10W		
R31			RK73FB2A104J	CHIP R 100K J 1/10W		
R32			RK73FB2A471J	CHIP R 470 J 1/10W		
R33			RK73FB2A221J	CHIP R 220 J 1/10W		
R34			RK73FB2A562J	CHIP R 5.6K J 1/10W		
R35			RK73FB2A101J	CHIP R 100 J 1/10W		
R36			RK73FB2A471J	CHIP R 470 J 1/10W		
R37			RK73FB2A222J	CHIP R 2.2K J 1/10W		
R38			RK73FB2A103J	CHIP R 10K J 1/10W		
R39			RK73FB2A334J	CHIP R 330K J 1/10W		
R40			RK73FB2A101J	CHIP R 100 J 1/10W		
R41			RK73FB2A332J	CHIP R 3.3K J 1/10W		
R42			RK73FB2A221J	CHIP R 220 J 1/10W		
R43			RK73FB2A105J	CHIP R 1.0M J 1/10W		
R44			RK73FB2A472J	CHIP R 4.7K J 1/10W		
R45			RK73FB2A102J	CHIP R 1.0K J 1/10W		
R46			RK73FB2A474J	CHIP R 470K J 1/10W		
R47			RK73FB2A103J	CHIP R 10K J 1/10W		
R48			RK73FB2A223J	CHIP R 22K J 1/10W		
R49			RK73FB2A272J	CHIP R 2.7K J 1/10W		
R50			RK73FB2A560J	CHIP R 56 J 1/10W		
R51			RK73FB2A221J	CHIP R 220 J 1/10W		
R52			RK73FB2A471J	CHIP R 470 J 1/10W		
R53			RK73FB2A223J	CHIP R 22K J 1/10W		
R54			RK73FB2A822J	CHIP R 8.2K J 1/10W		
R55			RK73FB2A391J	CHIP R 390 J 1/10W		
R56			RK73FB2A101J	CHIP R 100 J 1/10W		
R57			RK73FB2A221J	CHIP R 220 J 1/10W		
R58			RK73FB2A183J	CHIP R 18K J 1/10W		
R59			RK73FB2A104J	CHIP R 100K J 1/10W		
R60			RK73FB2A471J	CHIP R 470 J 1/10W		
R61			RK73FB2A474J	CHIP R 470K J 1/10W		

L:Scandinavia K:USA P:Canada
Y:PX(Far East, Hawaii) T:England E:Europe
Y:AAFES(Europe) X:Australia M:Other Areas

⚠ indicates safety critical components.

TS-950SDX

PARTS LIST

⋇ New Parts
Parts without Parts No. are not supplied.
Les articles non mentionnes dans le Parts No. ne sont pas fournis.
Teile ohne Parts No. werden nicht geliefert.

IF UNIT (X48-3100-00)

Ref. No. 参照番号	Address 位置	New Parts 新	Parts No. 部品番号	Description 部品名／規格	Destination 仕向	Remarks 備考
R62			RK73FB2A221J	CHIP R 220 J 1/10W		
R63 ,64			RK73FB2A560J	CHIP R 56 J 1/10W		
R65 ,66			RK73FB2A102J	CHIP R 1.0K J 1/10W		
R67			RK73FB2A221J	CHIP R 220 J 1/10W		
R68			RK73FB2A473J	CHIP R 47K J 1/10W		
R69			RK73FB2A182J	CHIP R 1.8K J 1/10W		
R70			RK73FB2A102J	CHIP R 1.0K J 1/10W		
R71			RK73FB2A221J	CHIP R 220 J 1/10W		
R72			RK73FB2A101J	CHIP R 100 J 1/10W		
R73 -75			RK73FB2A681J	CHIP R 680 J 1/10W		
R76 ,77			RK73FB2A561J	CHIP R 560 J 1/10W		
R78			RK73FB2A102J	CHIP R 1.0K J 1/10W		
R79 -82			RK73FB2A103J	CHIP R 10K J 1/10W		
R83 ,84			RK73FB2A223J	CHIP R 22K J 1/10W		
R85			RK73FB2A560J	CHIP R 56 J 1/10W		
R86			RK73FB2A222J	CHIP R 2.2K J 1/10W		
R87			RK73FB2A104J	CHIP R 100K J 1/10W		
R88			RK73FB2A183J	CHIP R 18K J 1/10W		
R89			RK73FB2A104J	CHIP R 100K J 1/10W		
R90			RK73FB2A223J	CHIP R 22K J 1/10W		
R91 ,92			RK73FB2A102J	CHIP R 1.0K J 1/10W		
R93 ,94			RK73FB2A221J	CHIP R 220 J 1/10W		
R95			RK73FB2A560J	CHIP R 56 J 1/10W		
R96			RK73FB2A221J	CHIP R 220 J 1/10W		
R97			RK73FB2A471J	CHIP R 470 J 1/10W		
R98			RK73FB2A223J	CHIP R 22K J 1/10W		
R99			RK73FB2A822J	CHIP R 8.2K J 1/10W		
R100			RK73FB2A391J	CHIP R 390 J 1/10W		
R101			RK73FB2A101J	CHIP R 100 J 1/10W		
R102,103			RK73FB2A472J	CHIP R 4.7K J 1/10W		
R104			RK73FB2A101J	CHIP R 100 J 1/10W		
R105			RK73FB2A103J	CHIP R 10K J 1/10W		
R106			RK73FB2A102J	CHIP R 1.0K J 1/10W		
R107			RK73FB2A153J	CHIP R 15K J 1/10W		
R108			RK73FB2A333J	CHIP R 33K J 1/10W		
R109			RK73FB2A154J	CHIP R 150K J 1/10W		
R110			RK73FB2A102J	CHIP R 1.0K J 1/10W		
R111			RK73FB2A473J	CHIP R 47K J 1/10W		
R112			RK73FB2A103J	CHIP R 10K J 1/10W		
R113			RK73FB2A223J	CHIP R 22K J 1/10W		
R114			RK73FB2A102J	CHIP R 1.0K J 1/10W		
R115			RK73FB2A103J	CHIP R 10K J 1/10W		
R116			RK73FB2A101J	CHIP R 100 J 1/10W		
R117			RK73FB2A221J	CHIP R 220 J 1/10W		
R118			RK73FB2A102J	CHIP R 1.0K J 1/10W		
R119			RK73FB2A333J	CHIP R 33K J 1/10W		
R120,121			RK73FB2A474J	CHIP R 470K J 1/10W		
R123			RK73FB2A103J	CHIP R 10K J 1/10W		
R124			RK73FB2A223J	CHIP R 22K J 1/10W		
R125,126			RK73FB2A102J	CHIP R 1.0K J 1/10W		
R127			RK73FB2A221J	CHIP R 220 J 1/10W		
R128			RK73FB2A333J	CHIP R 33K J 1/10W		
R129			RK73FB2A122J	CHIP R 1.2K J 1/10W		
R130			RK73FB2A152J	CHIP R 1.5K J 1/10W		
R131			RK73FB2A221J	CHIP R 220 J 1/10W		

L:Scandinavia K:USA P:Canada
Y:PX(Far East, Hawaii) T:England E:Europe
Y:AAFES(Europe) X:Australia M:Other Areas

⚠ indicates safety critical components.

PARTS LIST

* New Parts
Parts without Parts No. are not supplied.
Les articles non mentionnes dans le Parts No. ne sont pas fournis.
Teile ohne Parts No. werden nicht geliefert.

IF UNIT (X48-3100-00)

Ref. No. 参照番号	Address 位置	New Parts 新	Parts No. 部品番号	Description 部品名／規格				Destination 仕向	Remarks 備考
R132			RK73FB2A101J	CHIP R	100	J	1/10W		
R133			RK73FB2A122J	CHIP R	1.2K	J	1/10W		
R134			RK73FB2A221J	CHIP R	220	J	1/10W		
R135			RK73FB2A152J	CHIP R	1.5K	J	1/10W		
R136			RK73FB2A101J	CHIP R	100	J	1/10W		
R137			RK73FB2A221J	CHIP R	220	J	1/10W		
R140			RK73FB2A101J	CHIP R	100	J	1/10W		
R141			RK73FB2A122J	CHIP R	1.2K	J	1/10W		
R143			RK73FB2A152J	CHIP R	1.5K	J	1/10W		
R144			RK73FB2A101J	CHIP R	100	J	1/10W		
R145			RK73FB2A221J	CHIP R	220	J	1/10W		
R146			RK73FB2A332J	CHIP R	3.3K	J	1/10W		
R147			RK73FB2A221J	CHIP R	220	J	1/10W		
R148			RK73FB2A102J	CHIP R	1.0K	J	1/10W		
R149			RK73FB2A183J	CHIP R	18K	J	1/10W		
R150			RK73FB2A103J	CHIP R	10K	J	1/10W		
R151			RK73FB2A104J	CHIP R	100K	J	1/10W		
R152,153			RK73FB2A220J	CHIP R	22	J	1/10W		
R154,155			RK73FB2A561J	CHIP R	560	J	1/10W		
R156			RK73FB2A101J	CHIP R	100	J	1/10W		
R157			RK73FB2A222J	CHIP R	2.2K	J	1/10W		
R158,159			RK73FB2A103J	CHIP R	10K	J	1/10W		
R160			RK73FB2A471J	CHIP R	470	J	1/10W		
R161-163			RK73FB2A102J	CHIP R	1.0K	J	1/10W		
R164			RK73FB2A101J	CHIP R	100	J	1/10W		
R165			RK73FB2A221J	CHIP R	220	J	1/10W		
R166			RK73FB2A391J	CHIP R	390	J	1/10W		
R167			RK73FB2A223J	CHIP R	22K	J	1/10W		
R168			RK73FB2A822J	CHIP R	8.2K	J	1/10W		
R169			RK73FB2A471J	CHIP R	470	J	1/10W		
R170			RK73FB2A221J	CHIP R	220	J	1/10W		
R171			RK73FB2A560J	CHIP R	56	J	1/10W		
R172			RK73FB2A221J	CHIP R	220	J	1/10W		
R173			RK73FB2A102J	CHIP R	1.0K	J	1/10W		
R174			RK73FB2A471J	CHIP R	470	J	1/10W		
R175			RK73FB2A152J	CHIP R	1.5K	J	1/10W		
R176			RK73FB2A271J	CHIP R	270	J	1/10W		
R177			RK73FB2A123J	CHIP R	12K	J	1/10W		
R178			RK73FB2A152J	CHIP R	1.5K	J	1/10W		
R179			RK73FB2A331J	CHIP R	330	J	1/10W		
R180			RK73FB2A221J	CHIP R	220	J	1/10W		
R181			RK73FB2A101J	CHIP R	100	J	1/10W		
R183			RK73FB2A564J	CHIP R	560K	J	1/10W		
R184			RK73FB2A473J	CHIP R	47K	J	1/10W		
R185			RK73FB2A104J	CHIP R	100K	J	1/10W		
R186			RK73FB2A103J	CHIP R	10K	J	1/10W		
R187			RK73FB2A182J	CHIP R	1.8K	J	1/10W		
R188-191			RK73FB2A102J	CHIP R	1.0K	J	1/10W		
R192			RK73FB2A103J	CHIP R	10K	J	1/10W		
R194			RK73FB2A180J	CHIP R	18	J	1/10W		
R195			RK73FB2A560J	CHIP R	56	J	1/10W		
R196-198			RK73FB2A221J	CHIP R	220	J	1/10W		
R199			RK73FB2A560J	CHIP R	56	J	1/10W		
R200,201			RK73FB2A221J	CHIP R	220	J	1/10W		
R202			RK73FB2A560J	CHIP R	56	J	1/10W		

L:Scandinavia K:USA P:Canada
Y:PX(Far East, Hawaii) T:England E:Europe
Y:AAFES(Europe) X:Australia M:Other Areas

⚠ indicates safety critical components.

PARTS LIST

⁎ New Parts
Parts without Parts No. are not supplied.
Les articles non mentionnes dans le Parts No. ne sont pas fournis.
Telle ohne Parts No. werden nicht geliefert.

IF UNIT (X48-3100-00)

Ref. No. 参照番号	Address 位置	New Parts 新	Parts No. 部品番号	Description 部品名／規格	Destination 仕向	Remarks 備考
R203			RK73FB2A472J	CHIP R 4.7K J 1/10W		
R204			RK73FB2A103J	CHIP R 10K J 1/10W		
R205			RK73FB2A333J	CHIP R 33K J 1/10W		
R206			RK73FB2A823J	CHIP R 82K J 1/10W		
R208			RK73FB2A272J	CHIP R 2.7K J 1/10W		
R209			RK73FB2A123J	CHIP R 12K J 1/10W		
R210			RK73FB2A101J	CHIP R 100 J 1/10W		
R211			RK73FB2A331J	CHIP R 330 J 1/10W		
R212			RK73FB2A223J	CHIP R 22K J 1/10W		
R213			RK73FB2A101J	CHIP R 100 J 1/10W		
R214			RK73FB2A392J	CHIP R 3.9K J 1/10W		
R215			RK73FB2A223J	CHIP R 22K J 1/10W		
R216			RK73FB2A681J	CHIP R 680 J 1/10W		
R218			RK73FB2A103J	CHIP R 10K J 1/10W		
R219			RK73FB2A104J	CHIP R 100K J 1/10W		
R220			RK73FB2A223J	CHIP R 22K J 1/10W		
R221			RK73FB2A562J	CHIP R 5.6K J 1/10W		
R222			RK73FB2A102J	CHIP R 1.0K J 1/10W		
R223			RK73FB2A221J	CHIP R 220 J 1/10W		
R225			RK73FB2A103J	CHIP R 10K J 1/10W		
R226			RK73FB2A562J	CHIP R 5.6K J 1/10W		
R227			RK73FB2A153J	CHIP R 15K J 1/10W		
R228			RK73FB2A102J	CHIP R 1.0K J 1/10W		
R229			RK73FB2A222J	CHIP R 2.2K J 1/10W		
R230			RK73FB2A560J	CHIP R 56 J 1/10W		
R231			RK73FB2A103J	CHIP R 10K J 1/10W		
R232			RK73FB2A473J	CHIP R 47K J 1/10W		
R233			RK73FB2A331J	CHIP R 330 J 1/10W		
R234			RK73FB2A680J	CHIP R 68 J 1/10W		
R235			RK73FB2A103J	CHIP R 10K J 1/10W		
R236			RD14BB2E101J	RD 100 J 1/4W		
R237			RK73FB2A121J	CHIP R 120 J 1/10W		
R300,301			RK73FB2A100J	CHIP R 10 J 1/10W		
R302			RK73FB2A152J	CHIP R 1.5K J 1/10W		
R303			RK73FB2A101J	CHIP R 100 J 1/10W		
R304			RK73FB2A122J	CHIP R 1.2K J 1/10W		
R306			RK73FB2A472J	CHIP R 4.7K J 1/10W		
R307			RK73FB2A821J	CHIP R 820 J 1/10W		
R308,309			RK73FB2A682J	CHIP R 6.8K J 1/10W		
R310			RK73FB2A101J	CHIP R 100 J 1/10W		
R311			RK73FB2A103J	CHIP R 10K J 1/10W		
R312			RK73FB2A152J	CHIP R 1.5K J 1/10W		
R313			RK73FB2A101J	CHIP R 100 J 1/10W		
R314			RK73FB2A122J	CHIP R 1.2K J 1/10W		
R315			RK73FB2A101J	CHIP R 100 J 1/10W		
R316			RK73FB2A472J	CHIP R 4.7K J 1/10W		
R320			RK73FB2A822J	CHIP R 8.2K J 1/10W		
R321			RK73FB2A223J	CHIP R 22K J 1/10W		
R322			RK73FB2A103J	CHIP R 10K J 1/10W		
R323			RK73FB2A394J	CHIP R 390K J 1/10W		
R324			RK73FB2A104J	CHIP R 100K J 1/10W		
R325			RK73FB2A683J	CHIP R 68K J 1/10W		
R326			RK73FB2A102J	CHIP R 1.0K J 1/10W		
R327,328			RK73FB2A562J	CHIP R 5.6K J 1/10W		
R329-331			RK73FB2A102J	CHIP R 1.0K J 1/10W		

L:Scandinavia K:USA P:Canada
Y:PX(Far East, Hawaii) T:England E:Europe
Y:AAFES(Europe) X:Australia M:Other Areas

⚠ indicates safety critical components.

PARTS LIST

× New Parts
Parts without Parts No. are not supplied.
Les articles non mentionnes dans le Parts No. ne sont pas fournis.
Teile ohne Parts No. werden nicht gellefert.

IF UNIT (X48-3100-00)

Ref. No. 参照番号	Address 位置	New Parts 新	Parts No. 部品番号	Description 部品名／規格	Destination 仕向	Remarks 備考
R332			RK73FB2A333J	CHIP R 33K J 1/10W		
R333			RK73FB2A103J	CHIP R 10K J 1/10W		
R334			RK73FB2A102J	CHIP R 1.0K J 1/10W		
VR1			R12-6730-05	TRIMMING POT.220		
VR2			R12-6740-05	TRIMMING POT.10K		
VR3			R12-6738-05	TRIMMING POT.4.7K		
VR4			R12-6732-05	TRIMMING POT.470		
VR5			R12-6740-05	TRIMMING POT.10K		
K1			S51-1420-05	RELAY		
SW1			S31-2419-05	SLIDE SWITCH		
D1 ,2			DAN202K	DIODE		
D3			HSM88AS	CHIP DIODE		
D4			LFB01	DIODE		
D5 -8			RLS135	CHIP DIODE		
D9			RLZ6.2A	CHIP ZENER DIODE(6.2V)		
D10			RLS135	CHIP DIODE		
D11			DAN202K	DIODE		
D12 -26			RLS135	CHIP DIODE		
D27 -29			RLS135	CHIP DIODE		
D30			DAN202K	DIODE		
D31			RLS135	CHIP DIODE		
D32 ,33			HSM88AS	CHIP DIODE		
D34			LFB01	DIODE		
D35			LN01301C(Q)	LED(GREEN)		
D36			LFB01	DIODE		
D37 -39			RLS135	CHIP DIODE		
D40			LFB01	DIODE		
D42			1S1555	DIODE		
D43 ,44			LFB01	DIODE		
D300-303			HSM88AS	CHIP DIODE		
D304,305			RLS135	CHIP DIODE		
IC1			AN612	IC(BALANCE MODULATOR)		
IC300			NJM2904M	IC(OP AMP X2)		
IC300			LM2904M	IC(OP AMP X2)		
Q1			3SK131(M)	FET		
Q2 ,3			2SK520(K44)	FET		
Q4			DTC124EK	DIGITAL TRANSISTOR		
Q5			3SK131(M)	FET		
Q6 -8			2SC2712(Y)	TRANSISTOR		
Q9 ,10			3SK131(M)	FET		
Q11			2SC2714(Y)	TRANSISTOR		
Q12			2SC2712(Y)	TRANSISTOR		
Q13			2SC2714(Y)	TRANSISTOR		
Q14			3SK131(M)	FET		
Q15 ,16			2SK520(K44)	FET		
Q17			2SC2712(Y)	TRANSISTOR		
Q18			2SA1162(Y)	TRANSISTOR		
Q19 ,20			3SK131(M)	FET		
Q21 ,22			2SC2712(Y)	TRANSISTOR		
Q23			2SC2714(Y)	TRANSISTOR		
Q24			3SK131(M)	FET		
Q25			2SC2714(Y)	TRANSISTOR		
Q26			2SK210(GR)	FET		
Q27 -29			2SC2714(Y)	TRANSISTOR		

L:Scandinavia K:USA P:Canada
Y:PX(Far East, Hawaii) T:England E:Europe
Y:AAFES(Europe) X:Australia M:Other Areas

⚠ indicates safety critical components.

TS-950SDX

PARTS LIST

⁎ New Parts
Parts without Parts No. are not supplied.
Les articles non mentionnes dans le Parts No. ne sont pas fournis.
Teile ohne Parts No. werden nicht geliefert.

IF UNIT (X48-3100-00)
AF UNIT (X49-3050-00)

Ref. No. 参照番号	Address 位置	New Parts 新	Parts No. 部品番号	Description 部品名／規格	Destination 仕向	Remarks 備考
Q30			2SC2712(Y)	TRANSISTOR		
Q31			2SC2714(Y)	TRANSISTOR		
Q32 ,33			2SC2712(Y)	TRANSISTOR		
Q34			DTA124EK	DIGITAL TRANSISTOR		
Q35			2SA1162(Y)	TRANSISTOR		
Q36 -38			3SK131(M)	FET		
Q39			2SC2714(Y)	TRANSISTOR		
Q40			2SC2712(Y)	TRANSISTOR		
Q41			3SK131(M)	FET		
Q42			2SC3324(G)	TRANSISTOR		
Q44			2SK520(K44)	FET		
Q45			DTC124EK	DIGITAL TRANSISTOR		
Q46			DTA124EK	DIGITAL TRANSISTOR		
Q300-302			DTC124EK	DIGITAL TRANSISTOR		
			X59-3350-00	MODULE UNIT(NB2)		
TH1			112-302-2	THERMISTOR 3K		
TH2			112-502-2	THERMISTOR 5K		
TH3			157-501-55003	THERMISTOR 500		
AF UNIT (X49-3050-00)						
C1			CK73FB1H472K	CHIP C 4700PF K		
C2 ,3			CK73FF1E104Z	CHIP C 0.1UF Z		
C4			CK73FB1E103K	CHIP C 0.01UF K		
C5 -10			CK73FF1E104Z	CHIP C 0.1UF Z		
C11			CE04EW1C470M	ELECTRO 47UF 16WV		
C12			CE04EW1H010M	ELECTRO 1.0UF 50WV		
C13			CE04EW1C470M	ELECTRO 47UF 16WV		
C14			CE04EW1H010M	ELECTRO 1.0UF 50WV		
C15 ,16			CK73EF1C105Z	CHIP C 1.0UF Z		
C17			CK73FB1H273K	CHIP C 0.027UF K		
C18			CK73FF1E104Z	CHIP C 0.1UF Z		
C19			CK73EF1C105Z	CHIP C 1.0UF Z		
C20			CE04EW1H010M	ELECTRO 1.0UF 50WV		
C21			CE04EW1C470M	ELECTRO 47UF 16WV		
C22			CE04EW1H010M	ELECTRO 1.0UF 50WV		
C23 ,24			CE04EW1C470M	ELECTRO 47UF 16WV		
C25			CE04EW1H010M	ELECTRO 1.0UF 50WV		
C26			CE04EW1E4R7M	ELECTRO 4.7UF 25WV		
C27			CK73EF1C105Z	CHIP C 1.0UF Z		
C28			CE04EW1E4R7M	ELECTRO 4.7UF 25WV		
C29			CK73EF1C105Z	CHIP C 1.0UF Z		
C31			CE04EW1C470M	ELECTRO 47UF 16WV		
C32 -34			CE04EW1C100M	ELECTRO 10UF 16WV		
C35			CK73FB1E103K	CHIP C 0.01UF K		
C36			CE04EW1C100M	ELECTRO 10UF 16WV		
C37			CE04EW1C470M	ELECTRO 47UF 16WV		
C38 ,39			CE04EW1C100M	ELECTRO 10UF 16WV		
C40			CK73FB1E103K	CHIP C 0.01UF K		
C41			CE04EW1H0R1M	ELECTRO 0.1UF 50WV		
C42			CE04EW1HR22M	ELECTRO 0.22UF 50WV		
C43			CE04EW1C470M	ELECTRO 47UF 16WV		
C44			CK73FB1E103K	CHIP C 0.01UF K		
C45			CE04EW1E4R7M	ELECTRO 4.7UF 25WV		
C46			CE04EW1H010M	ELECTRO 1.0UF 50WV		
C47			CK73FF1E104Z	CHIP C 0.1UF Z		

L:Scandinavia K:USA P:Canada
Y:PX(Far East, Hawaii) T:England E:Europe
Y:AAFES(Europe) X:Australia M:Other Areas

⚠ indicates safety critical components.

PARTS LIST

* New Parts
Parts without Parts No. are not supplied.
Les articles non mentionnes dans le Parts No. ne sont pas fournis.
Teile ohne Parts No. werden nicht geliefert.

AF UNIT (X49-3050-00)

Ref. No. 参照番号	Address 位置	New Parts 新	Parts No. 部品番号	Description 部品名／規格			Destination 仕向	Remarks 備考
C48			CK73FB1H472K	CHIP C	4700PF	K		
C50			CE04EW1C470M	ELECTRO	47UF	16WV		
C51 ,52			CE04EW1C100M	ELECTRO	10UF	16WV		
C53			CK73FF1E104Z	CHIP C	0.1UF	Z		
C54			CE04EW1C470M	ELECTRO	47UF	16WV		
C55			CE04EW1C100M	ELECTRO	10UF	16WV		
C56			CK73FB1H102K	CHIP C	1000PF	K		
C57			CE04EW1C470M	ELECTRO	47UF	16WV		
C58			CK73FB1H332K	CHIP C	3300PF	K		
C59			CK73FB1H682K	CHIP C	6800PF	K		
C60			CK73FB1H332K	CHIP C	3300PF	K		
C61 -63			CE04EW1C470M	ELECTRO	47UF	16WV		
C63			CE04EW1C100M	ELECTRO	10UF	16WV		
C64 ,65			CE04EW1C470M	ELECTRO	47UF	16WV		
C66			CK73FB1H102K	CHIP C	1000PF	K		
C67 ,68			CK73EF1C105Z	CHIP C	1.0UF	Z		
C69			CK73FB1E123K	CHIP C	0.012UF	K		
C70			CK73FF1E104Z	CHIP C	0.1UF	Z		
C71 ,72			CK73FB1E103K	CHIP C	0.01UF	K		
C73 ,74			CK73FF1E104Z	CHIP C	0.1UF	Z		
C75 ,76			CK73FB1H102K	CHIP C	1000PF	K		
C77 -80			CC73FSL1H101J	CHIP C	100PF	J		
C81			CK73FB1H102K	CHIP C	1000PF	K		
C82			CK73FF1E104Z	CHIP C	0.1UF	Z		
C83			CE04EW1C221M	ELECTRO	220UF	16WV		
C84			CE04EW1C471M	ELECTRO	470UF	16WV		
C85 -88			CK73FB1H102K	CHIP C	1000PF	K		
C89			CQ92M1H103K	MYLAR	0.010UF	K		
C90			C91-1083-05	FILM	0.47UF	63WV		
C91			CK73FF1E104Z	CHIP C	0.1UF	Z		
C92			CE04EW1C101M	ELECTRO	100UF	16WV		
C93 -97			CK73FB1E103K	CHIP C	0.01UF	K		
C98 -100			CK73FB1H102K	CHIP C	1000PF	K		
C101,102			CC73FCH1H020C	CHIP C	2.0PF	C		
C103			CC73FCH1H060D	CHIP C	6PF	D		
C104-106			CK73FB1H102K	CHIP C	1000PF	K		
C107,108			CK73FB1E103K	CHIP C	0.01UF	K		
C109			CK73FB1H102K	CHIP C	1000PF	K		
C110			CK73FB1E103K	CHIP C	0.01UF	K		
C111			CE04EW1C470M	ELECTRO	47UF	16WV		
C112-117			CK73FB1E103K	CHIP C	0.01UF	K		
C118			CC73FCH1H680J	CHIP C	68PF	J		
C119			CC73FCH1H150J	CHIP C	15PF	J		
C120			CC73FCH1H180J	CHIP C	18PF	J		
C121			CC73FCH1H100D	CHIP C	10PF	D		
C122			CC73FCH1H070D	CHIP C	7PF	D		
C123			CC73FCH1H020C	CHIP C	2.0PF	C		
C124			CC73FCH1H080D	CHIP C	8PF	D		
C125			CC73FCH1H090D	CHIP C	9PF	D		
C126			CC73FCH1H030C	CHIP C	3PF	C		
C127-130			CK73FB1E103K	CHIP C	0.01UF	K		
C131-133			CK73FB1H102K	CHIP C	1000PF	K		
C134			CK73FF1E104Z	CHIP C	0.1UF	Z		
C135			CE04EW1C470M	ELECTRO	47UF	16WV		
C136			CK73FB1E103K	CHIP C	0.01UF	K		

L:Scandinavia K:USA P:Canada
Y:PX(Far East, Hawaii) T:England E:Europe
Y:AAFES(Europe) X:Australia M:Other Areas

⚠ indicates safety critical components.

TS-950SDX

PARTS LIST

⁎ New Parts
Parts without Parts No. are not supplied.
Les articles non mentionnes dans le Parts No. ne sont pas fournis.
Teile ohne Parts No. werden nicht geliefert.

AF UNIT (X49-3050-00)

Ref. No. 参照番号	Address 位置	New Parts 新	Parts No. 部品番号	Description 部品名／規格			Destination 仕向	Remarks 備考
C138			CK73FB1E103K	CHIP C	0.01UF	K		
C139			CK73FB1H102K	CHIP C	1000PF	K		
C140			CK73FB1E103K	CHIP C	0.01UF	K		
C141			CE04EW1C470M	ELECTRO	47UF	16WV		
C142,143			CK73FB1E103K	CHIP C	0.01UF	K		
C144			CQ92M1H333K	MYLAR	0.033UF	K		
C145			CE04EW1C470M	ELECTRO	47UF	16WV		
C146			C91-1101-05	FILM	0.22UF	63WV		
C147			CS15E1VR47M	TANTAL	0.47UF	35WV		
C148			CK45B1H102K	CERAMIC	1000PF	K		
C149			CK73FF1E104Z	CHIP C	0.1UF	Z		
C150			CE04EW1C101M	ELECTRO	100UF	16WV		
C151-153			CK73FB1H102K	CHIP C	1000PF	K		
C154			CC73FCH1H330J	CHIP C	33PF	J		
C155			CC73FCH1H080D	CHIP C	8PF	D		
C156			CC73FCH1H330J	CHIP C	33PF	J		
C157			CK73FB1H102K	CHIP C	1000PF	K		
C158			CK73FF1E104Z	CHIP C	0.1UF	Z		
C161			CE04EW1C470M	ELECTRO	47UF	16WV		
C162			CK73FF1E104Z	CHIP C	0.1UF	Z		
C163			CE04EW1C470M	ELECTRO	47UF	16WV		
C164			CC73FCH1H470J	CHIP C	47PF	J		
C165,166			CK73FF1E473Z	CHIP C	0.047UF	Z		
C167			CE04EW1C470M	ELECTRO	47UF	16WV		
C168			CK73FB1H102K	CHIP C	1000PF	K		
C169			CE04EW1HR47M	ELECTRO	0.47UF	50WV		
C170			CE04EW1H010M	ELECTRO	1.0UF	50WV		
C171,172			CK73FF1E104Z	CHIP C	0.1UF	Z		
C173			CK73FB1E103K	CHIP C	0.01UF	K		
C174			CK73FF1E473Z	CHIP C	0.047UF	Z		
C175			CK73FB1E103K	CHIP C	0.01UF	K		
C176			CK73FB1H102K	CHIP C	1000PF	K		
C177			CK73FF1E104Z	CHIP C	0.1UF	Z		
C178			CK73FB1H102K	CHIP C	1000PF	K		
C179			CC73FSL1H331J	CHIP C	330PF	J		
C180			CK73FB1H102K	CHIP C	1000PF	K		
C181			CC73FSL1H331J	CHIP C	330PF	J		
C182			CK73FF1E104Z	CHIP C	0.1UF	Z		
C183			CK73FB1H102K	CHIP C	1000PF	K		
C184,185			CK73FF1E104Z	CHIP C	0.1UF	Z		
C186,187			CK73FB1H102K	CHIP C	1000PF	K		
C188			CC73FSL1H151J	CHIP C	150PF	J		
C189			CE04EW1HR22M	ELECTRO	0.22UF	50WV		
C190			CK73FF1E154Z	CHIP C	0.15UF	Z		
C191			CE04EW1H010M	ELECTRO	1UF	50WV		
C304			CQ92M1H333K	MYLER	0.033UF	K		
C192			CE04EW1C101M	ELECTRO	100UF	16WV		
C193			CK73EF1E334Z	CHIP C	0.33UF	Z		
C194			CC73FCH1H100D	CHIP C	10PF	D		
C195			CC73FCH1H150J	CHIP C	15PF	J		
C196			C92-0009-05	CHIP TAN	4.7UF	10WV		
C305			CK73EB1E104K	CHIP C	0.1UF	K		
C301,302			CC73FSL1H101J	CHIP C	100PF	J		
TC301			C05-0309-05	TRIM CAP		40PF		
CN1			E40-5038-05	FPC CONNECTOR(14P)				
CN2			E40-3237-05	PIN CONNECTOR(2P)				

L:Scandinavia K:USA P:Canada
Y:PX(Far East, Hawaii) T:England E:Europe
Y:AAFES(Europe) X:Australia M:Other Areas

⚠ indicates safety critical components.

PARTS LIST

× New Parts
Parts without Parts No. are not supplied.
Les articles non mentionnes dans le Parts No. ne sont pas fournis.
Teile ohne Parts No. werden nicht geliefert.

AF UNIT (X49-3050-00)

Ref. No. 参照番号	Address 位置	New Parts 新	Parts No. 部品番号	Description 部品名／規格	Destination 仕向	Remarks 備考
CN3			E40-3241-05	PIN CONNECTOR(6P)		
CN4 ,5			E40-3239-05	PIN CONNECTOR(4P)		
CN6			E40-3237-05	PIN CONNECTOR(2P)		
CN7			E40-3240-05	PIN CONNECTOR(5P)		
CN8			E40-3243-05	PIN CONNECTOR(8P)		
CN9			E40-3237-05	PIN CONNECTOR(2P)		
CN10			E40-3239-05	PIN CONNECTOR(4P)		
CN11			E40-3238-05	PIN CONNECTOR(3P)		
CN12			E40-3240-05	PIN CONNECTOR(5P)		
CN13,14			E40-3239-05	PIN CONNECTOR(4P)		
CN15			E40-3237-05	PIN CONNECTOR(2P)		
CN16			E40-5038-05	FPC CONNECTOR(14P)		
CN18			E40-3237-05	PIN CONNECTOR(2P)		
CN19,20			E04-0154-05	RF COAXIAL JACK		
CN21			E23-0401-05	TERMINAL		
CN22			E40-3239-05	PIN CONNECTOR(4P)		
TP1 ,2			E23-0464-05	TERMINAL		
W1			E33-1894-15	FINISHED WIRE SET		
W3 ,4			E33-1894-15	FINISHED WIRE SET		
W301			R92-0150-05	JUMPER-R		
L1 ,2			L40-1011-14	SMALL FIXED INDUCTOR(100UH)		
L3			L40-3982-17	SMALL FIXED INDUCTOR(0.39UH)		
L4			L40-1292-17	SMALL FIXED INDUCTOR(1.2UH)		
L5			L40-3982-17	SMALL FIXED INDUCTOR(0.39UH)		
L6			L40-1011-14	SMALL FIXED INDUCTOR(100UH)		
L7			L40-1092-17	SMALL FIXED INDUCTOR(1UH)		
L8			L40-1592-17	SMALL FIXED INDUCTOR(1.5UH)		
L9			L40-8282-17	SMALL FIXED INDUCTOR(0.82UH)		
L10			L40-3982-17	SMALL FIXED INDUCTOR(0.39UH)		
L11			L40-1011-14	SMALL FIXED INDUCTOR(100UH)		
L12			L34-1124-05	COIL		
L13			L34-0535-05	TUNING COIL		
L14			L34-0536-05	TUNING COIL		
L15			L19-0347-05	TRANSFORMER		
L16			L40-1201-17	SMALL FIXED INDUCTOR(12UH)		
L301			L40-1592-17	SMALL FIXED INDUCTOR(1.5UH)		
R1			RK73FB2A101J	CHIP R 100 J 1/10W		
R2			RK73FB2A104J	CHIP R 100K J 1/10W		
R3			RK73FB2A332J	CHIP R 3.3K J 1/10W		
R4			RK73FB2A102J	CHIP R 1.0K J 1/10W		
R5 ,6			RK73FB2A822J	CHIP R 8.2K J 1/10W		
R7 ,8			RK73FB2A102J	CHIP R 1.0K J 1/10W		
R9 -12			RK73FB2A473J	CHIP R 47K J 1/10W		
R13			RK73FB2A272J	CHIP R 2.7K J 1/10W		
R14 -16			RK73FB2A104J	CHIP R 100K J 1/10W		
R17			RK73FB2A473J	CHIP R 47K J 1/10W		
R18			RK73FB2A683J	CHIP R 68K J 1/10W		
R19			RK73FB2A823J	CHIP R 82K J 1/10W		
R20			RK73FB2A472J	CHIP R 4.7K J 1/10W		
R21 -24			RK73FB2A104J	CHIP R 100K J 1/10W		
R25			RK73FB2A473J	CHIP R 47K J 1/10W		
R26			RK73FB2A104J	CHIP R 100K J 1/10W		
R27			RK73FB2A473J	CHIP R 47K J 1/10W		
R28			RK73FB2A822J	CHIP R 8.2K J 1/10W		
R29			RK73FB2A223J	CHIP R 22K J 1/10W		

L:Scandinavia K:USA P:Canada
Y:PX(Far East, Hawaii) T:England E:Europe
Y:AAFES(Europe) X:Australia M:Other Areas

⚠ indicates safety critical components.

TS-950SDX

PARTS LIST

⁎ New Parts
Parts without Parts No. are not supplied.
Les articles non mentionnes dans le Parts No. ne sont pas fournis.
Teile ohne Parts No. werden nicht geliefert.

AF UNIT (X49-3050-00)

Ref. No. 参照番号	Address 位置	New Parts 新	Parts No. 部品番号	Description 部品名／規格	Destination 仕向	Remarks 備考
R30			RK73FB2A473J	CHIP R 47K J 1/10W		
R31 ,32			RK73FB2A103J	CHIP R 10K J 1/10W		
R33			RK73FB2A153J	CHIP R 15K J 1/10W		
R34			RK73FB2A473J	CHIP R 47K J 1/10W		
R35			RK73FB2A153J	CHIP R 15K J 1/10W		
R36			RK73FB2A473J	CHIP R 47K J 1/10W		
R37 ,38			RK73FB2A124J	CHIP R 120K J 1/10W		
R39 ,40			RK73FB2A472J	CHIP R 4.7K J 1/10W		
R41 ,42			RK73FB2A274J	CHIP R 270K J 1/10W		
R44 ,45			RK73FB2A103J	CHIP R 10K J 1/10W		
R46			RK73FB2A102J	CHIP R 1.0K J 1/10W		
R47			RK73FB2A104J	CHIP R 100K J 1/10W		
R48			RK73FB2A223J	CHIP R 22K J 1/10W		
R49			RK73FB2A101J	CHIP R 100 J 1/10W		
R50			RK73FB2A222J	CHIP R 2.2K J 1/10W		
R51			RK73FB2A331J	CHIP R 330 J 1/10W		
R52			RK73FB2A821J	CHIP R 820 J 1/10W		
R53			RK73FB2A103J	CHIP R 10K J 1/10W		
R54			RK73FB2A102J	CHIP R 1.0K J 1/10W		
R55			RK73FB2A104J	CHIP R 100K J 1/10W		
R56			RK73FB2A223J	CHIP R 22K J 1/10W		
R57			RK73FB2A101J	CHIP R 100 J 1/10W		
R58			RK73FB2A222J	CHIP R 2.2K J 1/10W		
R59			RK73FB2A331J	CHIP R 330 J 1/10W		
R60			RK73FB2A821J	CHIP R 820 J 1/10W		
R61			RK73FB2A103J	CHIP R 10K J 1/10W		
R63			RK73FB2A103J	CHIP R 10K J 1/10W		
R64			RD14BB2C332J	RD-R 3.3K J 1/6 W		
R65 ,66			RK73FB2A103J	CHIP R 10K J 1/10W		
R67			RK73FB2A474J	CHIP R 470K J 1/10W		
R68			RK73FB2A473J	CHIP R 47K J 1/10W		
R69			RK73FB2A334J	CHIP R 330K J 1/10W		
R70 ,71			RK73FB2A103J	CHIP R 10K J 1/10W		
R73			RK73FB2A103J	CHIP R 10K J 1/10W		
R74			RK73FB2A153J	CHIP R 15K J 1/10W		
R75 -80			RK73FB2A103J	CHIP R 10K J 1/10W		
R81 ,82			RK73FB2A223J	CHIP R 22K J 1/10W		
R83			RK73FB2A274J	CHIP R 270K J 1/10W		
R84			RK73FB2A221J	CHIP R 220 J 1/10W		
R85			RK73FB2A222J	CHIP R 2.2K J 1/10W		
R86 -87			RK73FB2A103J	CHIP R 10K J 1/10W		
R88			RK73FB2A471J	CHIP R 470 J 1/10W		
R89			RK73FB2A101J	CHIP R 100 J 1/10W		
R90 ,91			RK73FB2A103J	CHIP R 10K J 1/10W		
R93			RK73FB2A224J	CHIP R 220K J 1/10W		
R94			RK73FB2A182J	CHIP R 1.8K J 1/10W		
R95			RK73FB2A221J	CHIP R 220 J 1/10W		
R96			RK73FB2A683J	CHIP R 68K J 1/10W		
R97			RK73FB2A823J	CHIP R 82K J 1/10W		
R98 -100			RK73FB2A104J	CHIP R 100K J 1/10W		
R101			RK73FB2A223J	CHIP R 22K J 1/10W		
R102-105			RK73FB2A221J	CHIP R 220 J 1/10W		
R106			RK73FB2A151J	CHIP R 150 J 1/10W		
R107-110			RK73FB2A223J	CHIP R 22K J 1/10W		
R111			RK73FB2A273J	CHIP R 27K J 1/10W		

L:Scandinavia K:USA P:Canada
Y:PX(Far East, Hawaii) T:England E:Europe
Y:AAFES(Europe) X:Australia M:Other Areas

⚠ indicates safety critical components.

PARTS LIST

* New Parts
Parts without Parts No. are not supplied.
Les articles non mentionnes dans le Parts No. ne sont pas fournis.
Teile ohne Parts No. werden nicht geliefert.

AF UNIT (X49-3050-00)

Ref. No. 参照番号	Address 位置	New Parts 新	Parts No. 部品番号	Description 部品名／規格	Destination 仕向	Remarks 備考
R112			RK73FB2A222J	CHIP R 2.2K J 1/10W		
R113			RK73FB2A334J	CHIP R 330K J 1/10W		
R114			RK73FB2A102J	CHIP R 1.0K J 1/10W		
R115			RK73FB2A182J	CHIP R 1.8K J 1/10W		
R116			RK73FB2A102J	CHIP R 1.0K J 1/10W		
R117,118			RK73FB2A221J	CHIP R 220 J 1/10W		
R119			RK73FB2A102J	CHIP R 1.0K J 1/10W		
R120			RK73FB2A223J	CHIP R 22K J 1/10W		
R121			RK73FB2A103J	CHIP R 10K J 1/10W		
R122			RK73FB2A332J	CHIP R 3.3K J 1/10W		
R123			RK73FB2A681J	CHIP R 680 J 1/10W		
R124			RK73FB2A471J	CHIP R 470 J 1/10W		
R125			RK73FB2A822J	CHIP R 8.2K J 1/10W		
R126			RK73FB2A103J	CHIP R 10K J 1/10W		
R127			RK73FB2A101J	CHIP R 100 J 1/10W		
R128			RK73FB2A223J	CHIP R 22K J 1/10W		
R129,130			RK73FB2A221J	CHIP R 220 J 1/10W		
R131			RK73FB2A223J	CHIP R 22K J 1/10W		
R132			RK73FB2A103J	CHIP R 10K J 1/10W		
R133,134			RK73FB2A102J	CHIP R 1.0K J 1/10W		
R135			RK73FB2A223J	CHIP R 22K J 1/10W		
R136			RK73FB2A103J	CHIP R 10K J 1/10W		
R139			RK73FB2A221J	CHIP R 220 J 1/10W		
R140			RK73FB2A102J	CHIP R 1.0K J 1/10W		
R141			RK73FB2A223J	CHIP R 22K J 1/10W		
R142-144			RK73FB2A103J	CHIP R 10K J 1/10W		
R145			RK73FB2A470J	CHIP R 47 J 1/10W		
R146			RK73FB2A221J	CHIP R 220 J 1/10W		
R147			RK73FB2A471J	CHIP R 470 J 1/10W		
R148			RK73FB2A470J	CHIP R 47 J 1/10W		
R149			RK73FB2A560J	CHIP R 56 J 1/10W		
R150			RK73FB2A221J	CHIP R 220 J 1/10W		
R151			RK73FB2A102J	CHIP R 1.0K J 1/10W		
R152			RK73FB2A223J	CHIP R 22K J 1/10W		
R153			RK73FB2A103J	CHIP R 10K J 1/10W		
R154			RK73FB2A223J	CHIP R 22K J 1/10W		
R155			RK73FB2A472J	CHIP R 4.7K J 1/10W		
R156			RK73FB2A331J	CHIP R 330 J 1/10W		
R157			RK73FB2A222J	CHIP R 2.2K J 1/10W		
R158			RK73FB2A682J	CHIP R 6.8K J 1/10W		
R159			RK73FB2A102J	CHIP R 1.0K J 1/10W		
R160			RK73FB2A182J	CHIP R 1.8K J 1/10W		
R161			RK73FB2A564J	CHIP R 560K J 1/10W		
R162			RK73FB2A104J	CHIP R 100K J 1/10W		
R163,164			RK73FB2A471J	CHIP R 470 J 1/10W		
R165			RK73FB2A223J	CHIP R 22K J 1/10W		
R166			RK73FB2A103J	CHIP R 10K J 1/10W		
R167			RK73FB2A221J	CHIP R 220 J 1/10W		
R168			RK73FB2A102J	CHIP R 1.0K J 1/10W		
R169			RK73FB2A470J	CHIP R 47 J 1/10W		
R170			RK73FB2A472J	CHIP R 4.7K J 1/10W		
R171			RK73FB2A101J	CHIP R 100 J 1/10W		
R172			RK73FB2A102J	CHIP R 1.0K J 1/10W		
R173			RK73FB2A472J	CHIP R 4.7K J 1/10W		
R174,175			RK73FB2A102J	CHIP R 1.0K J 1/10W		

L:Scandinavia K:USA P:Canada
Y:PX(Far East, Hawaii) T:England E:Europe
Y:AAFES(Europe) X:Australia M:Other Areas

⚠ indicates safety critical components.

TS-950SDX

PARTS LIST

× New Parts
Parts without Parts No. are not supplied.
Les articles non mentionnes dans le Parts No. ne sont pas fournis.
Teile onne Parts No. werden nicht geliefert.

AF UNIT (X49-3050-00)

Ref. No. 参照番号	Address 位置	New Parts 新	Parts No. 部品番号	Description 部品名／規格	Destination 仕向	Remarks 備考
R177			RK73FB2A223J	CHIP R 22K J 1/10W		
R178			RK73FB2A683J	CHIP R 68K J 1/10W		
R179			RK73FB2A333J	CHIP R 33K J 1/10W		
R180,181			RK73FB2A103J	CHIP R 10K J 1/10W		
R183			RK73FB2A102J	CHIP R 1.0K J 1/10W		
R184			RK73FB2A103J	CHIP R 10K J 1/10W		
R185			RK73FB2A101J	CHIP R 100 J 1/10W		
R186			RK73FB2A104J	CHIP R 100K J 1/10W		
R187			RK73FB2A333J	CHIP R 33K J 1/10W		
R188			RK73FB2A101J	CHIP R 100 J 1/10W		
R189-190			RK73FB2A102J	CHIP R 1.0K J 1/10W		
R191			RK73FB2A474J	CHIP R 470K J 1/10W		
R192			RK73FB2A222J	CHIP R 2.2K J 1/10W		
R193			RK73FB2A333J	CHIP R 33K J 1/10W		
R194			RK73FB2A473J	CHIP R 47K J 1/10W		
R202			RK73FB2A473J	CHIP R 47K J 1/10W		
R195			RK73FB2A474J	CHIP R 470K J 1/10W		
R196			RK73FB2A221J	CHIP R 220 J 1/10W		
R197,198			RK73FB2A103J	CHIP R 10K J 1/10W		
R199			RK73FB2A560J	CHIP R 56 J 1/10W		
R200,201			RK73FB2A104J	CHIP R 100K J 1/10W		
R304			RD14BB2C152J	RD-R 1.5K J 1/6W		
R204-207			RK73FB2A103J	CHIP R 10K J 1/10W		
R209			RK73FB2A121J	CHIP R 120 J 1/10W		
R210			RK73FB2A122J	CHIP R 1.2K J 1/10W		
R211			RK73FB2A103J	CHIP R 10K J 1/10W		
R212			RK73FB2A274J	CHIP R 270K J 1/10W		
R306			R92-0679-05	CHIP R 0 OHM		
R301,305			R92-0670-05	CHIP R 0 OHM		
VR1			R12-3126-05	TRIMMING POT.10K		
VR2			R12-3128-05	TRIMMING POT.22K		
VR3 -5			R12-3126-05	TRIMMING POT.10K		
VR6			R12-3128-05	TRIMMING POT.22K		
D1			DAN202K	CHIP DIODE		
D2			RLS73	CHIP DIODE		
D3			DAP202K	CHIP DIODE		
D4			RLS73	CHIP DIODE		
D5			DAP202K	CHIP DIODE		
D6			DAN202K	CHIP DIODE		
D7			RLS73	CHIP DIODE		
D8			DAP202K	CHIP DIODE		
D9			RLS73	CHIP DIODE		
D10			DAP202K	CHIP DIODE		
D11 ,12			DAN202K	CHIP DIODE		
D13			RLS73	CHIP DIODE		
D14			DAN202K	CHIP DIODE		
D15 -17			RLS73	CHIP DIODE		
D19			DAP202K	CHIP DIODE		
D21			RLS73	CHIP DIODE		
D22 ,23			DAN202K	CHIP DIODE		
D24			RLZJ12B	CHIP ZENER DIODE(12V)		
D25 ,26			RLS73	CHIP DIODE		
D27			RLZJ9.1B	CHIP ZENER DIODE(9.1V)		
D28 -30			HSM88AS	CHIP DIODE		
D33 ,34			RLS73	CHIP DIODE		
IC1			SN74LS390NS	IC(DIV.1/100)		
IC2			MF10CCWM	IC(SWITCHD CAPACITANCE/VBT)		
IC3			MF5CWM	IC(SWITCHD CAPACITANCE/SIDE TO		

L:Scandinavia K:USA P:Canada
Y:PX(Far East, Hawaii) T:England E:Europe
Y:AAFES(Europe) X:Australia M:Other Areas

⚠ indicates safety critical components.

PARTS LIST

* New Parts
Parts without Parts No. are not supplied.
Les articles non mentionnes dans le Parts No. ne sont pas fournis.
Teile ohne Parts No. werden nicht geliefert.

AF UNIT (X49-3050-00)
PLL UNIT (X50-3170-00)

Ref. No. 参照番号	Address 位置	New Parts 新	Parts No. 部品番号	Description 部品名／規格	Destination 仕向	Remarks 備考
IC4 -6			TC4066BF	IC(BILATERAL SWITCH X4)		
IC7 ,8			NJM4558M	IC(OP AMP X2)		
IC9			TC4538BF	IC(ONE SHOT MULT)		
IC10			TC4066BF	IC(BILATERAL SWITCH X4)		
IC11			CXD1225M	IC		
IC12			SN76514N	IC(MIXER)		
IC13			CXD1225M	IC		
IC14			AN78N10	IC(10V AVR)		
IC15			AN78N05	IC(VOLTAGE REGULATOR/ +5V)		
Q1			2SC2712(Y)	TRANSISTOR		
Q2			DTC124EK	DIGITAL TRANSISTOR		
Q3			DTA124EK	DIGITAL TRANSISTOR		
Q4			DTC124EK	DIGITAL TRANSISTOR		
Q5			DTA124EK	DIGITAL TRANSISTOR		
Q6			2SD1757K(S)	TRANSISTOR		
Q7			2SC2712(Y)	TRANSISTOR		
Q8 ,9			2SD1757K	TRANSISTOR		
Q10 ,11			2SC2712(Y)	TRANSISTOR		
Q12			2SD1757K	TRANSISTOR		
Q13 ,14			DTA124EK	DIGITAL TRANSISTOR		
Q15			2SC2712(Y)	TRANSISTOR		
Q16			DTC144WK	DIGITAL TRANSISTOR		
Q17			DTC124EK	DIGITAL TRANSISTOR		
Q18 ,19			DTA124EK	DIGITAL TRANSISTOR		
Q20			2SC2712(Y)	TRANSISTOR		
Q21 -23			DTA124EK	DIGITAL TRANSISTOR		
Q24 -27			DTC114EK	DIGITAL TRANSISTOR		
Q28			DTC114TK	DIGITAL TRANSISTOR		
Q29 -31			2SC3324(G)	TRANSISTOR		
Q32 -36			2SC2714(Y)	TRANSISTOR		
Q37			2SC2996(Y,O)	TRANSISTOR		
Q38			2SC2712(Y)	TRANSISTOR		
Q39			2SC2714(Y)	TRANSISTOR		
Q40			2SK210(GR)	FET		
Q41 -47			2SC2712(Y)	TRANSISTOR		
Q48			DTA124EK	DIGITAL TRANSISTOR		
Q49			2SA1162(Y)	TRANSISTOR		
Q51			DTA124EK	DIGITAL TRANSISTOR		
Q53			2SD1757K(S)	TRANSISTOR		
			X58-3390-03	SUB UNIT(VCO2)		
			X58-3630-00	SUB UNIT(VCO)		
			X59-1080-01	MODULE UNIT(VOX)		
			X59-3000-03	MODULE UNIT(FM MIC)		
			X59-3350-00	MODULE UNIT(NB2)		
			X59-3450-00	MODULE UNIT(LPF)		
PLL UNIT (X50-3170-00)						
C1			CK73FF1E104Z	CHIP C 0.1UF Z		
C2			CE04EW1E470M	ELECTRO 47UF 25WV		
C3			CK73FF1E104Z	CHIP C 0.1UF Z		
C4			CE04EW1E470M	ELECTRO 47UF 25WV		
C5			CK73FF1E104Z	CHIP C 0.1UF Z		
C6			CE04EW1E470M	ELECTRO 47UF 25WV		
C7			CK73FF1E104Z	CHIP C 0.1UF Z		
C8			CE04EW1E470M	ELECTRO 47UF 25WV		

L:Scandinavia K:USA P:Canada
Y:PX(Far East, Hawaii) T:England E:Europe
Y:AAFES(Europe) X:Australia M:Other Areas

⚠ indicates safety critical components.

TS-950SDX

PARTS LIST

× New Parts
Parts without Parts No. are not supplied.
Les articles non mentionnes dans le Parts No. ne sont pas fournis.
Teile ohne Parts No. werden nicht geliefert.

PLL UNIT (X50-3170-00)

Ref. No. 参照番号	Address 位置	New Parts 新	Parts No. 部品番号	Description 部品名／規格			Destination 仕向	Remarks 備考
C9			CK73FB1E103K	CHIP C	0.01UF	K		
C10			CC73FCH1H470J	CHIP C	47PF	J		
C11			CK73FB1E103K	CHIP C	0.01UF	K		
C12			CC73FCH1H470J	CHIP C	47PF	J		
C13			CC73FCH1H101J	CHIP C	100PF	J		
C14			CC73FCH1H470J	CHIP C	47PF	J		
C23 ,24			CK73FB1E103K	CHIP C	0.01UF	K		
C25 ,26			CK73FB1H102K	CHIP C	1000PF	K		
C27 -36			CC73FSL1H101J	CHIP C	100PF	J		
C37 -41			CK73FB1E103K	CHIP C	0.01UF	K		
C43 ,44			CK73FB1E103K	CHIP C	0.01UF	K		
C45			CE04EW1C100M	ELECTRO	10UF	16WV		
C46			CK73FB1E103K	CHIP C	0.01UF	K		
C47			CE04EW1C100M	ELECTRO	10UF	16WV		
C48			CK73FB1E103K	CHIP C	0.01UF	K		
C49			CE04EW1C100M	ELECTRO	10UF	16WV		
C54			CK73FB1E103K	CHIP C	0.01UF	K		
C55			CE04EW1E4R7M	ELECTRO	4.7UF	25WV		
C56 ,57			CK73FB1E103K	CHIP C	0.01UF	K		
C58			CE04EW1E4R7M	ELECTRO	4.7UF	25WV		
C59			CK73FB1E103K	CHIP C	0.01UF	K		
C60			CC73FCH1H101J	CHIP C	100PF	J		
C61 ,62			CC73FCH1H470J	CHIP C	47PF	J		
C63			CE04EW1E4R7M	ELECTRO	4.7UF	25WV		
C64 ,65			CK73FB1E103K	CHIP C	0.01UF	K		
C66			CC73FSL1H681J	CHIP C	680PF	J		
C67			CC73FCH1H050C	CHIP C	5PF	C		
C68			CK73FB1H152K	CHIP C	1500PF	K		
C69			CC73FCH1H050C	CHIP C	5PF	C		
C70			CC73FSL1H681J	CHIP C	680PF	J		
C71 -75			CK73FB1H473K	CHIP C	0.047UF	K		
C77 -80			CK73FB1H103K	CHIP C	0.010UF	K		
C82			CK73FB1H103K	CHIP C	0.010UF	K		
C83			CE04EW1C470M	ELECTRO	47UF	16WV		
C84			CK73FB1H102K	CHIP C	1000PF	K		
C86			CK73FB1E103K	CHIP C	0.01UF	K		
C87			CK73FB1H102K	CHIP C	1000PF	K		
C88			CQ92M1H333K	MYLAR	0.033UF	K		
C89			CE04EW1C470M	ELECTRO	47UF	16WV		
C90			C91-1101-05	FILM	0.22UF	63WV		
C91			C91-0105-05	CERAMIC	0.0047UF	K		
C92			CC73FUJ1H060D	CHIP C	6PF	D		
C93			CC73FCH1H150J	CHIP C	15PF	J		
C94			CC73FCH1H330J	CHIP C	33PF	J		
C95			CE04EW1E470M	ELECTRO	47UF	25WV		
C96 -100			CK73FB1E103K	CHIP C	0.01UF	K		
C101			CE04EW1C470M	ELECTRO	47UF	16WV		
C102			CK73FB1E473K	CHIP C	0.047UF	K		
C103			CK73FB1H222K	CHIP C	2200PF	K		
C104			CK73FB1E103K	CHIP C	0.01UF	K		
C105			CK73FB1H222K	CHIP C	2200PF	K		
C106-110			CK73FB1E473K	CHIP C	0.047UF	K		
C111-113			CK73FB1E103K	CHIP C	0.01UF	K		
C114			CC73FCH1H680J	CHIP C	68PF	J		
C115			CC73FCH1H0R5C	CHIP C	0.5PF	C		

L:Scandinavia K:USA P:Canada
Y:PX(Far East, Hawaii) T:England E:Europe
Y:AAFES(Europe) X:Australia M:Other Areas

⚠ indicates safety critical components.

PARTS LIST

* New Parts
Parts without Parts No. are not supplied.
Les articles non mentionnes dans le Parts No. ne sont pas fournis.
Teile ohne Parts No. werden nicht geliefert.

PLL UNIT (X50-3170-00)

Ref. No. 参照番号	Address 位置	New Parts 新	Parts No. 部品番号	Description 部品名／規格			Destination 仕向	Remarks 備考
C116			CC73FCH1H680J	CHIP C	68PF	J		
C117			CK73FB1E103K	CHIP C	0.01UF	K		
C118			CC73FSL1H391J	CHIP C	390PF	J		
C119			CC73FSL1H681J	CHIP C	680PF	J		
C120			CC73FSL1H391J	CHIP C	390PF	J		
C121-126			CK73FB1E103K	CHIP C	0.01UF	K		
C127			CC73FCH1H121J	CHIP C	120PF	J		
C128			CC73FCH1H181J	CHIP C	180PF	J		
C129			CC73FCH1H121J	CHIP C	120PF	J		
C130			CK73FB1E103K	CHIP C	0.01UF	K		
C131			CC73FSL1H821J	CHIP C	820PF	J		
C132			CC73FCH1H160J	CHIP C	16PF	J		
C133			CK73FB1H182K	CHIP C	1800PF	K		
C134			CC73FCH1H160J	CHIP C	16PF	J		
C135			CC73FSL1H821J	CHIP C	820PF	J		
C136-139			CK73FB1E473K	CHIP C	0.047UF	K		
C140			CK73FB1E103K	CHIP C	0.01UF	K		
C141			CC73FCH1H010C	CHIP C	1PF	C		
C143			CC73FCH1H150J	CHIP C	15PF	J		
C144,145			CK73FB1E103K	CHIP C	0.01UF	K		
C147-149			CK73FB1E103K	CHIP C	0.01UF	K		
C150			CE04EW1C470M	ELECTRO	47UF	16WV		
C152			CK73FB1H102K	CHIP C	1000PF	K		
C153			CK73FB1E103K	CHIP C	0.01UF	K		
C154			CK73FB1H102K	CHIP C	1000PF	K		
C156			CQ92M1H222K	MYLAR	0.0022UF	K		
C157			C91-1083-05	FILM	0.47UF	63WV		
C158			CK73FB1H102K	CHIP C	1000PF	K		
C159			CQ92M1H102K	MYLAR	1000PF	K		
C160			C91-1083-05	FILM	0.47UF	63WV		
C161			CK73FB1H102K	CHIP C	1000PF	K		
C162			CK73FB1E103K	CHIP C	0.01UF	K		
C163			CE04EW1C470M	ELECTRO	47UF	16WV		
C164			CK73FB1E103K	CHIP C	0.01UF	K		
C165,166			CK73FB1E473K	CHIP C	0.047UF	K		
C167			CK73FB1H103K	CHIP C	0.010UF	K		
C168			CC73FCH1H030C	CHIP C	3PF	C		
C169			CC73FCH1H120J	CHIP C	12PF	J		
C170			CC73FCH1H180J	CHIP C	18PF	J		
C172			CC73FCH1H090D	CHIP C	9PF	D		
C173			CC73FCH1H150J	CHIP C	15PF	J		
C174			CC73FCH1H180J	CHIP C	18PF	J		
C175			CC73FCH1H100D	CHIP C	10PF	D		
C176-179			CK73FB1E103K	CHIP C	0.01UF	K		
C180			CE04EW1C221M	ELECTRO	220UF	16WV		
C181			CE04EW1C331M	ELECTRO	330UF	16WV		
C182-189			CK73FB1E103K	CHIP C	0.01UF	K		
C191-200			CK73FB1E103K	CHIP C	0.01UF	K		
C201			CC73FCH1H070D	CHIP C	7PF	D		
C202			CC73FCH1H050C	CHIP C	5PF	C		
C203			CC73FCH1H030C	CHIP C	3PF	C		
C204-206			CK73FB1E103K	CHIP C	0.01UF	K		
C207			CC73FCH1H470J	CHIP C	47PF	J		
C209			CC73FCH1H100D	CHIP C	10PF	D		
C211			CC73FCH1H180J	CHIP C	18PF	J		

L:Scandinavia K:USA P:Canada
Y:PX(Far East, Hawaii) T:England E:Europe
Y:AAFES(Europe) X:Australia M:Other Areas

⚠ indicates safety critical components.

TS-950SDX

PARTS LIST

× New Parts
Parts without Parts No. are not supplied.
Les articles non mentionnes dans le Parts No. ne sont pas fournis.
Teile ohne Parts No. werden nicht gellefert.

PLL UNIT (X50-3170-00)

Ref. No. 参照番号	Address 位置	New Parts 新	Parts No. 部品番号	Description 部品名／規格	Destination 仕向	Remarks 備考
C212			CC73FCH1H220J	CHIP C 22PF J		
C213			CK73FB1H102K	CHIP C 1000PF K		
C214			CC73FCH1H330J	CHIP C 33PF J		
C215			CK73FB1E103K	CHIP C 0.01UF K		
C216			CC73FCH1H030C	CHIP C 3PF C		
C217			CK73FB1E103K	CHIP C 0.01UF K		
C218			CE04EW1C470M	ELECTRO 47UF 16WV		
C219,220			CK73FB1E103K	CHIP C 0.01UF K		
C221			CC73FCH1H330J	CHIP C 33PF J		
C222			CC73FCH1H120J	CHIP C 12PF J		
C223			CC73FCH1H330J	CHIP C 33PF J		
C224-226			CK73FB1E103K	CHIP C 0.01UF K		
C227			CK73FB1E103K	CHIP C 0.01UF K		
C228,229			CC73FCH1H101J	CHIP C 100PF J		
C230			CK73FB1H102K	CHIP C 0.001UF K		
TC1			C05-0309-05	TRIM CAP 40PF		
			E31-6083-05	CONNECTING WIRE		
CN1			E40-5139-05	FPC CONNECTOR(24P)		
CN2			E40-3239-05	PIN CONNECTOR(4P)		
CN3			E40-3242-05	PIN CONNECTOR(7P)		
CN4			E40-3240-05	PIN CONNECTOR(5P)		
CN5			E40-3238-05	PIN CONNECTOR(3P)		
CN6			E40-3239-05	PIN CONNECTOR(4P)		
CN7 -9			E04-0157-05	RF COAXIAL JACK		
TP2			E23-0464-05	TERMINAL		
TP5			E23-0464-05	TERMINAL		
TP7 ,8			E23-0464-05	TERMINAL		
A1			F11-0817-14	SHIELDING CASE		
A2			F11-0818-34	SHIELDING COVER		
L1			L40-1011-15	SMALL FIXED INDUCTOR(100UH)		
L2 ,3			L40-6891-17	SMALL FIXED INDUCTOR(6.8UH)		
L4 -7			L40-1001-15	SMALL FIXED INDUCTOR(10UH)		
L8 ,9			L40-2282-48	SMALL FIXED INDUCTOR(22UH)		
L10			L40-4782-17	SMALL FIXED INDUCTOR(47UH)		
L11			L40-3901-17	SMALL FIXED INDUCTOR(39UH)		
L12			L40-2282-17	SMALL FIXED INDUCTOR(22UH)		
L13			L40-3901-17	SMALL FIXED INDUCTOR(39UH)		
L14			L40-4782-17	SMALL FIXED INDUCTOR(47UH)		
L15			L34-4196-05	COIL		
L16			L34-4197-05	COIL		
L17			L34-4196-05	COIL		
L18			L40-1011-15	SMALL FIXED INDUCTOR(100UH)		
L19			L32-0676-05	OSC COIL		
L20 ,21			L40-1011-15	SMALL FIXED INDUCTOR(100UH)		
L22			L40-1801-17	SMALL FIXED INDUCTOR(18UH)		
L23			L40-1501-17	SMALL FIXED INDUCTOR(15UH)		
L24 ,25			L34-4003-05	COIL		
L26 ,27			L40-1011-15	SMALL FIXED INDUCTOR(100UH)		
L28 ,29			L40-2701-17	SMALL FIXED INDUCTOR(27UH)		
L30			L40-1592-17	SMALL FIXED INDUCTOR(1.5UH)		
L31			L40-6801-17	SMALL FIXED INDUCTOR(68UH)		
L32			L40-6882-17	SMALL FIXED INDUCTOR(68UH)		
L33			L40-6801-17	SMALL FIXED INDUCTOR(68UH)		

L:Scandinavia K:USA P:Canada
Y:PX(Far East, Hawaii) T:England E:Europe
Y:AAFES(Europe) X:Australia M:Other Areas

⚠ indicates safety critical components.

PARTS LIST

* New Parts
Parts without Parts No. are not supplied.
Les articles non mentionnes dans le Parts No. ne sont pas fournis.
Teile ohne Parts No. werden nicht geliefert.

PLL UNIT (X50-3170-00)

Ref. No. 参照番号	Address 位置	New Parts 新	Parts No. 部品番号	Description 部品名／規格	Destination 仕向	Remarks 備考
L34			L40-1592-17	SMALL FIXED INDUCTOR(1.5UH)		
L35 ,36			L34-2063-15	COIL		
L37			L34-4200-05	COIL		
L38			L34-4201-05	COIL		
L39			L34-4200-05	COIL		
L40 ,41			L40-1011-15	SMALL FIXED INDUCTOR(100UH)		
L42			L40-1892-17	SMALL FIXED INDUCTOR(1.8UH)		
L43			L40-1592-17	SMALL FIXED INDUCTOR(1.5UH)		
L44			L40-8282-17	SMALL FIXED INDUCTOR(82UH)		
L45			L40-1011-15	SMALL FIXED INDUCTOR(100UH)		
L46			L34-4200-05	COIL		
L47			L34-4201-05	COIL		
L48			L34-4200-05	COIL		
L49			L40-1092-17	SMALL FIXED INDUCTOR(1UH)		
L50			L40-1592-17	SMALL FIXED INDUCTOR(1.5UH)		
L51			L40-1092-17	SMALL FIXED INDUCTOR(1UH)		
L52			L33-0663-05	CHOKE COIL		
L53			L34-4195-05	COIL		
L54			L34-1124-05	COIL		
L56			L40-2282-17	SMALL FIXED INDUCTOR(22UH)		
X1			L77-1423-05	CRYSTAL RESONATOR(50.75MHZ)		
CP1 -4			R90-0721-05	MULTI-COMP 10K		
R1			RK73FB2A560J	CHIP R 56 J 1/10W		
R2			RK73FB2A683J	CHIP R 68K J 1/10W		
R3			RK73FB2A102J	CHIP R 1.0K J 1/10W		
R5			RK73FB2A122J	CHIP R 1.2K J 1/10W		
R6 ,7			RK73FB2A471J	CHIP R 470 J 1/10W		
R8 ,9			RK73FB2A223J	CHIP R 22K J 1/10W		
R10 -23			RK73FB2A221J	CHIP R 220 J 1/10W		
R24 -27			RK73FB2A223J	CHIP R 22K J 1/10W		
R29			RK73FB2A103J	CHIP R 10K J 1/10W		
R30			RK73FB2A331J	CHIP R 330 J 1/10W		
R31 ,32			RK73FB2A470J	CHIP R 47 J 1/10W		
R34			RK73FB2A223J	CHIP R 22K J 1/10W		
R35			RK73FB2A331J	CHIP R 330 J 1/10W		
R36 ,37			RK73FB2A102J	CHIP R 1.0K J 1/10W		
R38 ,39			RK73FB2A470J	CHIP R 47 J 1/10W		
R40			RK73FB2A102J	CHIP R 1.0K J 1/10W		
R41			RK73FB2A221J	CHIP R 220 J 1/10W		
R42			RK73FB2A102J	CHIP R 1.0K J 1/10W		
R43			RK73FB2A221J	CHIP R 220 J 1/10W		
R44			RK73FB2A103J	CHIP R 10K J 1/10W		
R45			RK73FB2A223J	CHIP R 22K J 1/10W		
R46			RK73FB2A561J	CHIP R 560 J 1/10W		
R47			RK73FB2A104J	CHIP R 100K J 1/10W		
R48			RK73FB2A392J	CHIP R 3.9K J 1/10W		
R49			RK73FB2A220J	CHIP R 22 J 1/10W		
R50			RK73FB2A681J	CHIP R 680 J 1/10W		
R51			RK73FB2A221J	CHIP R 220 J 1/10W		
R52			RK73FB2A102J	CHIP R 1.0K J 1/10W		
R53			RK73FB2A221J	CHIP R 220 J 1/10W		
R54			RK73FB2A103J	CHIP R 10K J 1/10W		
R55			RK73FB2A223J	CHIP R 22K J 1/10W		
R56			RK73FB2A123J	CHIP R 12K J 1/10W		

L:Scandinavia K:USA P:Canada
Y:PX(Far East, Hawaii) T:England E:Europe
Y:AAFES(Europe) X:Australia M:Other Areas

⚠ indicates safety critical components.

PARTS LIST

* New Parts
Parts without Parts No. are not supplied.
Les articles non mentionnes dans le Parts No. ne sont pas fournis.
Teile ohne Parts No. werden nicht geliefert.

PLL UNIT (X50-3170-00)

Ref. No. 参照番号	Address 位置	New Parts 新	Parts No. 部品番号	Description 部品名／規格	Destination 仕向	Remarks 備考
R57			RK73FB2A273J	CHIP R 27K J 1/10W		
R58			RK73FB2A182J	CHIP R 1.8K J 1/10W		
R59			RK73FB2A103J	CHIP R 10K J 1/10W		
R60			RK73FB2A470J	CHIP R 47 J 1/10W		
R61			RK73FB2A152J	CHIP R 1.5K J 1/10W		
R62			RK73FB2A681J	CHIP R 680 J 1/10W		
R63 -64			RK73FB2A221J	CHIP R 220 J 1/10W		
R65			RK73FB2A471J	CHIP R 470 J 1/10W		
R66			RK73FB2A472J	CHIP R 4.7K J 1/10W		
R67			RK73FB2A473J	CHIP R 47K J 1/10W		
R68			RK73FB2A681J	CHIP R 680 J 1/10W		
R69 ,70			RK73FB2A103J	CHIP R 10K J 1/10W		
R71			RK73FB2A821J	CHIP R 820 J 1/10W		
R72			RK73FB2A221J	CHIP R 220 J 1/10W		
R73			RK73FB2A470J	CHIP R 47 J 1/10W		
R75			RK73FB2A562J	CHIP R 5.6K J 1/10W		
R76			RK73FB2A273J	CHIP R 27K J 1/10W		
R77			RK73FB2A474J	CHIP R 470K J 1/10W		
R78 ,79			RK73FB2A102J	CHIP R 1.0K J 1/10W		
R80			RK73FB2A103J	CHIP R 10K J 1/10W		
R81			RK73FB2A104J	CHIP R 100K J 1/10W		
R82			RK73FB2A562J	CHIP R 5.6K J 1/10W		
R83			RK73FB2A102J	CHIP R 1.0K J 1/10W		
R84			RK73FB2A474J	CHIP R 470K J 1/10W		
R85			RK73FB2A102J	CHIP R 1.0K J 1/10W		
R87			RK73FB2A103J	CHIP R 10K J 1/10W		
R88			RK73FB2A102J	CHIP R 1.0K J 1/10W		
R89			RK73FB2A221J	CHIP R 220 J 1/10W		
R90 ,91			RK73FB2A103J	CHIP R 10K J 1/10W		
R92			RK73FB2A221J	CHIP R 220 J 1/10W		
R93			RK73FB2A222J	CHIP R 2.2K J 1/10W		
R94			RK73FB2A153J	CHIP R 15K J 1/10W		
R95			RK73FB2A681J	CHIP R 680 J 1/10W		
R96			RK73FB2A102J	CHIP R 1.0K J 1/10W		
R97			RK73FB2A103J	CHIP R 10K J 1/10W		
R98			RK73FB2A822J	CHIP R 8.2K J 1/10W		
R99			RK73FB2A221J	CHIP R 220 J 1/10W		
R100			RK73FB2A101J	CHIP R 100 J 1/10W		
R101			RK73FB2A681J	CHIP R 680 J 1/10W		
R102,103			RK73FB2A103J	CHIP R 10K J 1/10W		
R104			RK73FB2A470J	CHIP R 47 J 1/10W		
R105			RK73FB2A221J	CHIP R 220 J 1/10W		
R106			RK73FB2A471J	CHIP R 470 J 1/10W		
R107			RK73FB2A332J	CHIP R 3.3K J 1/10W		
R108			RK73FB2A223J	CHIP R 22K J 1/10W		
R109			RK73FB2A103J	CHIP R 10K J 1/10W		
R110			RK73FB2A102J	CHIP R 1.0K J 1/10W		
R111,112			RK73FB2A221J	CHIP R 220 J 1/10W		
R113			RK73FB2A151J	CHIP R 150 J 1/10W		
R114			RK73FB2A221J	CHIP R 220 J 1/10W		
R115			RK73FB2A223J	CHIP R 22K J 1/10W		
R116			RK73FB2A103J	CHIP R 10K J 1/10W		
R117			RK73FB2A102J	CHIP R 1.0K J 1/10W		
R118			RK73FB2A221J	CHIP R 220 J 1/10W		
R119			RK73FB2A223J	CHIP R 22K J 1/10W		

L:Scandinavia K:USA P:Canada
Y:PX(Far East, Hawaii) T:England E:Europe
Y:AAFES(Europe) X:Australia M:Other Areas

⚠ indicates safety critical components.

PARTS LIST

× New Parts
Parts without Parts No. are not supplied.
Les articles non mentionnes dans le Parts No. ne sont pas fournis.
Teile ohne Parts No. werden nicht geliefert.

PLL UNIT (X50-3170-00)
CAR UNIT (X50-3180-00)

Ref. No. 参照番号	Address 位置	New Parts 新	Parts No. 部品番号	Description 部品名／規格	Destination 仕向	Remarks 備考
R120			RK73FB2A103J	CHIP R 10K J 1/10W		
R121			RK73FB2A123J	CHIP R 12K J 1/10W		
R122			RK73FB2A103J	CHIP R 10K J 1/10W		
R123			RK73FB2A101J	CHIP R 100 J 1/10W		
R124			RK73FB2A102J	CHIP R 1.0K J 1/10W		
R125			RK73FB2A471J	CHIP R 470 J 1/10W		
R126			RK73FB2A223J	CHIP R 22K J 1/10W		
R127			RK73FB2A103J	CHIP R 10K J 1/10W		
R128			RK73FB2A221J	CHIP R 220 J 1/10W		
R129			RK73FB2A102J	CHIP R 1.0K J 1/10W		
R130			RK73FB2A470J	CHIP R 47 J 1/10W		
R131			RK73FB2A102J	CHIP R 1.0K J 1/10W		
R132			RK73FB2A104J	CHIP R 100K J 1/10W		
R133			RK73FB2A101J	CHIP R 100 J 1/10W		
R134			RK73FB2A152J	CHIP R 1.5K J 1/10W		
R135			RK73FB2A681J	CHIP R 680 J 1/10W		
R136-137			RK73FB2A103J	CHIP R 10K J 1/10W		
R138			RK73FB2A124J	CHIP R 120K J 1/10W		
R139			RK73FB2A104J	CHIP R 100K J 1/10W		
D1			RLS73	CHIP DIODE		
D2			1SV166	DIODE		
D3			RLS73	CHIP DIODE		
D4			RLZJ12B	CHIP ZENER DIODE(12V)		
D5			RLZJ9.1B	CHIP ZENER DIODE(9.1V)		
IC1			AN78N08	IC(VOLTAGE REGULATOR/ +35V)		
IC2			SN74LS90N	IC(DECADE COUNRERS)		
IC3 ,4		*	F71022	IC		
IC5			CXD1225M	IC(PLL SYNTHESIZER)		
IC6			M54459L	IC(PRE SCALER)		
IC7 -10			SN16913P	IC(DUBLE BALANCED MIXERS)		
IC11			CXD1225M	IC(PLL SYNTHESIZER)		
IC12,13			SN16913P	IC(DUBLE BALANCED MIXERS)		
Q1			2SC2714(Y)	TRANSISTOR		
Q2 -7			DTC114EK	DIGITAL TRANSISTOR		
Q8			2SC2712(Y)	TRANSISTOR		
Q9 ,10			2SC2714(Y)	TRANSISTOR		
Q11			2SC2712(Y)	TRANSISTOR		
Q12 ,13			2SK508NV(K52)	FET		
Q14 ,15			2SC2712(Y)	TRANSISTOR		
Q16 -23			2SC2714(Y)	TRANSISTOR		
Q24 ,25			2SC2712(Y)	TRANSISTOR		
Q26 -32			2SC2714(Y)	TRANSISTOR		
			X58-3630-01	SUB UNIT(VCO)		
			X59-3440-00	MODULE UNIT(VCO1)		
			X59-3450-01	MODULE UNIT(LPF)		
CAR UNIT (X50-3180-00)						
C1			CK73FB1E103K	CHIP C 0.01UF K		
C2			CE04EW1A470M	ELECTRO 47UF 10WV		
C3			CK73FB1H102K	CHIP C 1000PF K		
C4			CK73FB1E103K	CHIP C 0.01UF K		
C5			CK73FB1H102K	CHIP C 1000PF K		
C6			CE04EW1C470M	ELECTRO 47UF 16WV		
C7			CQ92M1H472K	MYLAR 4700PF K		
C8			CQ92M1H223K	MYLAR 0.022UF K		

L:Scandinavia K:USA P:Canada
Y:PX(Far East, Hawaii) T:England E:Europe
Y:AAFES(Europe) X:Australia M:Other Areas

⚠ indicates safety critical components.

PARTS LIST

× New Parts
Parts without Parts No. are not supplied.
Les articles non mentionnes dans le Parts No. ne sont pas fournis.
Teile ohne Parts No. werden nicht geliefert.

CAR UNIT (X50-3180-00)

Ref. No. 参照番号	Address 位置	New Parts 新	Parts No. 部品番号	Description 部品名／規格			Destination 仕向	Remarks 備考
C9			C91-0105-05	CERAMIC	0.0047UF	K		
C10			CK73FB1E103K	CHIP C	0.01UF	K		
C11			CE04EW1C470M	ELECTRO	47UF	16WV		
C12			CC73FRH1H470J	CHIP C	47PF	J		
C13			CC73FCH1H180J	CHIP C	18PF	J		
C14			CC73FCH1H470J	CHIP C	47PF	J		
C15 -17			CK73FB1E103K	CHIP C	0.01UF	K		
C18			CE04EW1A470M	ELECTRO	47UF	10WV		
C19			CK73FB1E103K	CHIP C	0.01UF	K		
C20			CK73FF1E104Z	CHIP C	0.1UF	Z		
C21			CK73FB1H272K	CHIP C	2700PF	K		
C22			CK73FB1H391K	CHIP C	390PF	K		
C23			CK73FB1H272K	CHIP C	2700PF	K		
C24 ,25			CK73FF1E104Z	CHIP C	0.1UF	Z		
C26			CE04EW1E470M	ELECTRO	47UF	25WV		
C27			CK73FF1E104Z	CHIP C	0.1UF	Z		
C28			CK73FB1E103K	CHIP C	0.01UF	K		
C29			CE04EW1A470M	ELECTRO	47UF	10WV		
C30			CK73FB1H102K	CHIP C	1000PF	K		
C31			CK73FB1E103K	CHIP C	0.01UF	K		
C32			CK73FB1H102K	CHIP C	1000PF	K		
C33			CE04EW1C470M	ELECTRO	47UF	16WV		
C34			CC73FSL1H471J	CHIP C	47PF	J		
C35			CQ92M1H222K	MYLAR	2200PF	K		
C36			C91-0105-05	CERAMIC	0.0047UF	K		
C37			CK73FB1H102K	CHIP C	1000PF	K		
C38			CE04EW1C470M	ELECTRO	47UF	16WV		
C39			CC73FRH1H050C	CHIP C	5PF	C		
C40			CC73FCH1H200J	CHIP C	20PF	J		
C41			CC73FCH1H020C	CHIP C	2PF	C		
C42 ,43			CK73FB1H102K	CHIP C	1000PF	K		
C44			CK73FB1E103K	CHIP C	0.01UF	K		
C45			CE04EW1A470M	ELECTRO	47UF	10WV		
C46			CK73FB1H102K	CHIP C	1000PF	K		
C47			CK73FF1E104Z	CHIP C	0.1UF	Z		
C48			CC73FSL1H151J	CHIP C	150PF	J		
C49			CK73FB1H331K	CHIP C	330PF	K		
C50			CC73FSL1H151J	CHIP C	150PF	J		
C51 -55			CK73FF1E104Z	CHIP C	0.1UF	Z		
C56 -62			CK73FB1E103K	CHIP C	0.01UF	K		
C63			CE04EW1A470M	ELECTRO	47UF	10WV		
C64			CK73FB1H102K	CHIP C	1000PF	K		
C65			CK73FB1E103K	CHIP C	0.01UF	K		
C66			CK73FB1H102K	CHIP C	1000PF	K		
C67			CE04EW1C470M	ELECTRO	47UF	16WV		
C68			CQ92M1H472K	MYLAR	4700PF	K		
C69			CQ92M1H223K	MYLAR	0.022UF	K		
C70			C91-0105-05	CERAMIC	0.0047UF	K		
C71			CK73FB1H102K	CHIP C	1000PF	K		
C72			CE04EW1C470M	ELECTRO	47UF	16WV		
C73			CC73FRH1H220J	CHIP C	22PF	J		
C74			CC73FCH1H150J	CHIP C	15PF	J		
C75			CC73FCH1H270J	CHIP C	27PF	J		
C76 ,77			CK73FB1H102K	CHIP C	1000PF	K		
C78			CK73FB1E103K	CHIP C	0.01UF	K		

L:Scandinavia K:USA P:Canada
Y:PX(Far East, Hawaii) T:England E:Europe
Y:AAFES(Europe) X:Australia M:Other Areas

⚠ indicates safety critical components.

PARTS LIST

× New Parts
Parts without Parts No. are not supplied.
Les articles non mentionnes dans le Parts No. ne sont pas fournis.
Teile ohne Parts No. werden nicht geliefert.

CAR UNIT (X50-3180-00)

Ref. No. 参照番号	Address 位置	New Parts 新	Parts No. 部品番号	Description 部品名／規格			Destination 仕向	Remarks 備考
C79			CE04EW1A470M	ELECTRO	47UF	10WV		
C80			CK73FB1H102K	CHIP C	1000PF	K		
C81			CK73FF1E104Z	CHIP C	0.1UF	Z		
C82			CK73FB1H271K	CHIP C	270PF	K		
C83			CK73FB1H561K	CHIP C	560PF	K		
C84			CK73FB1H271K	CHIP C	270PF	K		
C85 -89			CK73FF1E104Z	CHIP C	0.1UF	Z		
C91 -96			CK73FB1E103K	CHIP C	0.01UF	K		
C97			CE04EW1A470M	ELECTRO	47UF	10WV		
C98			CK73FB1H102K	CHIP C	1000PF	K		
C99			CK73FB1E103K	CHIP C	0.01UF	K		
C100			CK73FB1H102K	CHIP C	1000PF	K		
C101			CE04EW1C470M	ELECTRO	47UF	16WV		
C102			CQ92M1H822K	MYLAR	8200PF	K		
C103			CQ92M1H223K	MYLAR	0.022UF	K		
C104			C91-0105-05	CERAMIC	0.0047UF	K		
C105			CK73FB1E103K	CHIP C	0.01UF	K		
C106			CE04EW1C470M	ELECTRO	47UF	16WV		
C107,108			CK73FB1H102K	CHIP C	1000PF	K		
C109			CC73FCH1H101J	CHIP C	100PF	J		
C110			CK73FB1E103K	CHIP C	0.01UF	K		
C127-129			CK73FB1E103K	CHIP C	0.01UF	K		
C130-133			CK73FF1E104Z	CHIP C	0.1UF	Z		
C134-136			CK73FB1E103K	CHIP C	0.01UF	K		
C137			CK73FF1E104Z	CHIP C	0.1UF	Z		
C138			CK73FB1H222K	CHIP C	2200PF	K		
C139			CK73FB1H472K	CHIP C	4700PF	K		
C140			CK73FB1H222K	CHIP C	2200PF	K		
C141,142			CK73FF1E104Z	CHIP C	0.1UF	Z		
C143			CE04EW1E470M	ELECTRO	47UF	25WV		
C144			CK73FF1E104Z	CHIP C	0.1UF	Z		
C145,146			CK73FB1E103K	CHIP C	0.01UF	K		
C147			CE04EW1A470M	ELECTRO	47UF	10WV		
C148			CK73FB1E103K	CHIP C	0.01UF	K		
C149			CK73FF1E104Z	CHIP C	0.1UF	Z		
C150			CK73FB1H272K	CHIP C	2700PF	K		
C151			CK73FB1H562K	CHIP C	5600PF	K		
C152			CK73FB1H272K	CHIP C	2700PF	K		
C153,154			CK73FF1E104Z	CHIP C	0.1UF	Z		
C155			CE04EW1E470M	ELECTRO	47UF	25WV		
C156-161			CK73FF1E104Z	CHIP C	0.1UF	Z		
C162			CE04EW1A470M	ELECTRO	47UF	10WV		
C163			CQ92M1H472K	MYLAR	4700PF	K		
C164			CS15E1V0R1M	TANTAL	0.1UF	35WV		
C165			C91-0117-05	CERAMIC	0.01UF	K		
C166			CK73FB1E103K	CHIP C	0.01UF	K		
C167			CC73FUJ1H180J	CHIP C	18PF	J		
C168			CC73FCH1H151J	CHIP C	150PF	J		
C169			CC73FCH1H101J	CHIP C	100PF	J		
C170			CC73FCH1H050C	CHIP C	5PF	C		
C172			CE04EW1C470M	ELECTRO	47UF	16WV		
C173-175			CK73FB1E103K	CHIP C	0.01UF	K		
C176			CE04EW1A470M	ELECTRO	47UF	10WV		
C177			CC73FCH1H050C	CHIP C	5PF	C		
C178			CK73FB1E103K	CHIP C	0.01UF	K		

L:Scandinavia K:USA P:Canada
Y:PX(Far East, Hawaii) T:England E:Europe
Y:AAFES(Europe) X:Australia M:Other Areas

⚠ indicates safety critical components.

TS-950SDX

PARTS LIST

* New Parts
Parts without Parts No. are not supplied.
Les articles non mentionnes dans le Parts No. ne sont pas fournis.
Teile ohne Parts No. werden nicht geliefert.

CAR UNIT (X50-3180-00)

Ref. No. 参照番号	Address 位置	New Parts 新	Parts No. 部品番号	Description 部品名／規格	Destination 仕向	Remarks 備考
C179,180			CC73FSL1H121J	CHIP C 120PF J		
C181			CK73FB1E103K	CHIP C 0.01UF K		
C182			CC73FCH1H470J	CHIP C 47PF J		
C183-186			CK73FB1E103K	CHIP C 0.01UF K		
C187			CE04EW1A470M	ELECTRO 47UF 10WV		
C188			CK73FB1E103K	CHIP C 0.01UF K		
C189			CC73FCH1H180J	CHIP C 18PF J		
C190			CC73FCH1H390J	CHIP C 39PF J		
C191			CC73FCH1H180J	CHIP C 18PF J		
C192-194			CK73FB1E103K	CHIP C 0.01UF K		
C195,196			CC73FCH1H050C	CHIP C 5PF C		
C197-199			CK73FB1E103K	CHIP C 0.01UF K		
C203			CK73FB1E103K	CHIP C 0.01UF K		
C204			CE04EW1A470M	ELECTRO 47UF 10WV		
C212			CK73FB1E103K	CHIP C 0.01UF K		
C213			CE04EW1A470M	ELECTRO 47UF 10WV		
C214			CK73FB1E103K	CHIP C 0.01UF K		
C215-217			CK73FB1H102K	CHIP C 1000PF K		
C218-221			CK73FB1H102K	CHIP C 1000PF K		
C223-226			CK73FB1E103K	CHIP C 0.01UF K		
C227			CK73FB1H222K	CHIP C 2200PF K		
C228			CC73FCH1H010C	CHIP C 1PF C		
C229			CC73FCH1H270J	CHIP C 27PF J		
C230			CK73FB1H102K	CHIP C 1000PF K		
TC1			C05-0044-05	TRIM CAP 30PF		
TC2			C05-0355-05	TRIM CAP 30PF		
CN1			E40-3239-05	PIN CONNECTOR(4P)		
CN2			E40-3237-05	PIN CONNECTOR(2P)		
CN3			E40-3239-05	PIN CONNECTOR(4P)		
CN4			E40-3238-05	PIN CONNECTOR(3P)		
CN5			E40-3237-05	PIN CONNECTOR(2P)		
CN8 ,9			E40-3237-05	PIN CONNECTOR(2P)		
CN10			E04-0154-05	RF COAXIAL JACK		
CN11			E40-3237-05	PIN CONNECTOR(2P)		
CN12			E40-3241-05	PIN CONNECTOR(6P)		
CN13			E40-3242-05	PIN CONNECTOR(7P)		
J1 ,2			E13-0166-05	PHONO JACK(EXT.STD)		
J3			E06-0859-05	DIN SOCKET(SCOPE DIN 8P)		
J4			E06-0658-05	DIN SOCKET(ACC1 DIN 6P)		
TP1 -4			E23-0464-05	TERMINAL		
W1 ,2			E33-1887-15	FINISHED WIRE SET		
A1 -4			F11-0817-04	SHIELDING COVER		
A5 -8			F11-0818-34	SHIELDING CASE		
CF1			L72-0343-05	CERAMIC FILTER		
CF2			L72-0369-05	CERAMIC FILTER		
L1 ,2			L40-1011-14	SMALL FIXED INDUCTOR(100UH)		
L3			L32-0197-05	OSC COIL		
L4			L40-1011-14	SMALL FIXED INDUCTOR(100UH)		
L5			L40-6801-17	SMALL FIXED INDUCTOR(68UH)		
L6			L40-4711-14	SMALL FIXED INDUCTOR(470UH)		
L7			L40-6801-17	SMALL FIXED INDUCTOR(68UH)		
L8 ,9			L40-1011-14	SMALL FIXED INDUCTOR(100UH)		
L10		*	L34-4303-05	COIL(162.5MHZ)		

L:Scandinavia K:USA P:Canada
Y:PX(Far East, Hawaii) T:England E:Europe
Y:AAFES(Europe) X:Australia M:Other Areas

⚠ indicates safety critical components.

PARTS LIST

* New Parts
Parts without Parts No. are not supplied.
Les articles non mentionnes dans le Parts No. ne sont pas fournis.
Teile ohne Parts No. werden nicht geliefert.

CAR UNIT (X50-3180-00)

Ref. No. 参照番号	Address 位置	New Parts 新	Parts No. 部品番号	Description 部品名／規格	Destination 仕向	Remarks 備考
L11			L40-1011-14	SMALL FIXED INDUCTOR(100UH)		
L12 ,13			L40-1011-17	SMALL FIXED INDUCTOR(100UH)		
L14			L34-4204-15	COIL		
L15 ,16			L40-1011-14	SMALL FIXED INDUCTOR(100UH)		
L17			L32-0639-05	OSC COIL(69.5MHZ)		
L18			L40-1011-14	SMALL FIXED INDUCTOR(100UH)		
L19 ,20			L40-2211-17	SMALL FIXED INDUCTOR(220UH)		
L21			L34-4204-15	COIL		
L22 ,23			L40-1011-14	SMALL FIXED INDUCTOR(100UH)		
L24			L32-0640-05	OSC COIL(10MHZ)		
L27 ,28			L40-6811-14	SMALL FIXED INDUCTOR		
L29			L40-1011-14	SMALL FIXED INDUCTOR(100UH)		
L30 ,31			L40-1021-14	SMALL FIXED INDUCTOR(1MHZ)		
L32			L40-1011-14	SMALL FIXED INDUCTOR(100UH)		
L33			L40-4701-17	SMALL FIXED INDUCTOR(47UH)		
L35			L40-6882-17	SMALL FIXED INDUCTOR(0.68UH)		
L36			L40-1011-14	SMALL FIXED INDUCTOR(100UH)		
L37 ,38			L40-1201-17	SMALL FIXED INDUCTOR(12UH)		
L41 ,42			L40-1011-14	SMALL FIXED INDUCTOR(100UH)		
X1			L77-0963-05	CRYSTAL RESONATOR(20MHZ)		
X2			L77-1394-15	TCXO(20MHZ)		
R1			RK73FB2A152J	CHIP R 1.5K J 1/10W		
R2			RK73FB2A182J	CHIP R 1.8K J 1/10W		
R3			RK73FB2A683J	CHIP R 68K J 1/10W		
R4			RK73FB2A103J	CHIP R 10K J 1/10W		
R5			RK73FB2A272J	CHIP R 2.7K J 1/10W		
R6			RK73FB2A101J	CHIP R 100 J 1/10W		
R7 ,8			RK73FB2A681J	CHIP R 680 J 1/10W		
R9			RK73FB2A221J	CHIP R 220 J 1/10W		
R10			RK73FB2A223J	CHIP R 22K J 1/10W		
R11			RK73FB2A103J	CHIP R 10K J 1/10W		
R12			RK73FB2A471J	CHIP R 470 J 1/10W		
R13			RK73FB2A102J	CHIP R 1.0K J 1/10W		
R14			RK73FB2A182J	CHIP R 1.8K J 1/10W		
R15			RK73FB2A474J	CHIP R 470K J 1/10W		
R16			RK73FB2A103J	CHIP R 10K J 1/10W		
R17			RK73FB2A392J	CHIP R 3.9K J 1/10W		
R18			RK73FB2A182J	CHIP R 1.8K J 1/10W		
R19			RK73FB2A681J	CHIP R 680 J 1/10W		
R20 ,21			RK73FB2A221J	CHIP R 220 J 1/10W		
R22			RK73FB2A223J	CHIP R 22K J 1/10W		
R23			RK73FB2A103J	CHIP R 10K J 1/10W		
R24			RK73FB2A102J	CHIP R 1.0K J 1/10W		
R25			RK73FB2A101J	CHIP R 100 J 1/10W		
R26			RK73FB2A331J	CHIP R 330 J 1/10W		
R27			RK73FB2A221J	CHIP R 220 J 1/10W		
R28			RK73FB2A153J	CHIP R 15K J 1/10W		
R29			RK73FB2A222J	CHIP R 2.2K J 1/10W		
R30			RK73FB2A221J	CHIP R 220 J 1/10W		
R31			RK73FB2A152J	CHIP R 1.5K J 1/10W		
R32			RK73FB2A182J	CHIP R 1.8K J 1/10W		
R33			RK73FB2A683J	CHIP R 68K J 1/10W		
R34			RK73FB2A103J	CHIP R 10K J 1/10W		
R35			RK73FB2A392J	CHIP R 3.9K J 1/10W		

L:Scandinavia K:USA P:Canada
Y:PX(Far East, Hawaii) T:England E:Europe
Y:AAFES(Europe) X:Australia M:Other Areas

⚠ indicates safety critical components.

PARTS LIST

× New Parts
Parts without Parts No. are not supplied.
Les articles non mentionnes dans le Parts No. ne sont pas fournis.
Teile ohne Parts No. werden nicht geliefert.

CAR UNIT (X50-3180-00)

Ref. No. 参照番号	Address 位置	New Parts 新	Parts No. 部品番号	Description 部品名／規格	Destination 仕向	Remarks 備考
R36			RK73FB2A182J	CHIP R 1.8K J 1/10W		
R37			RK73FB2A681J	CHIP R 680 J 1/10W		
R38 ,39			RK73FB2A221J	CHIP R 220 J 1/10W		
R40			RK73FB2A223J	CHIP R 22K J 1/10W		
R41			RK73FB2A103J	CHIP R 10K J 1/10W		
R42			RK73FB2A102J	CHIP R 1.0K J 1/10W		
R43			RK73FB2A101J	CHIP R 100 J 1/10W		
R44			RK73FB2A331J	CHIP R 330 J 1/10W		
R45			RK73FB2A221J	CHIP R 220 J 1/10W		
R46			RK73FB2A153J	CHIP R 15K J 1/10W		
R47			RK73FB2A222J	CHIP R 2.2K J 1/10W		
R48			RK73FB2A221J	CHIP R 220 J 1/10W		
R49			RK73FB2A562J	CHIP R 5.6K J 1/10W		
R50			RK73FB2A182J	CHIP R 1.8K J 1/10W		
R51			RK73FB2A223J	CHIP R 22K J 1/10W		
R52			RK73FB2A103J	CHIP R 10K J 1/10W		
R63			RK73FB2A221J	CHIP R 220 J 1/10W		
R64			RK73FB2A223J	CHIP R 22K J 1/10W		
R65			RK73FB2A103J	CHIP R 10K J 1/10W		
R66			RK73FB2A102J	CHIP R 1.0K J 1/10W		
R67 ,68			RK73FB2A221J	CHIP R 220 J 1/10W		
R69			RK73FB2A223J	CHIP R 22K J 1/10W		
R70			RK73FB2A103J	CHIP R 10K J 1/10W		
R71 ,72			RK73FB2A102J	CHIP R 1.0K J 1/10W		
R73			RK73FB2A561J	CHIP R 560 J 1/10W		
R74			RK73FB2A471J	CHIP R 470 J 1/10W		
R75			RK73FB2A221J	CHIP R 220 J 1/10W		
R76			RK73FB2A223J	CHIP R 22K J 1/10W		
R77			RK73FB2A103J	CHIP R 10K J 1/10W		
R78			RK73FB2A102J	CHIP R 1.0K J 1/10W		
R79			RK73FB2A272J	CHIP R 2.7K J 1/10W		
R80			RK73FB2A101J	CHIP R 100 J 1/10W		
R81			RK73FB2A561J	CHIP R 560 J 1/10W		
R82			RK73FB2A471J	CHIP R 470 J 1/10W		
R83			RK73FB2A221J	CHIP R 220 J 1/10W		
R84			RK73FB2A223J	CHIP R 22K J 1/10W		
R85			RK73FB2A103J	CHIP R 10K J 1/10W		
R86			RK73FB2A471J	CHIP R 470 J 1/10W		
R87			RK73FB2A102J	CHIP R 1.0K J 1/10W		
R88			RK73FB2A683J	CHIP R 68K J 1/10W		
R89			RK73FB2A561J	CHIP R 560 J 1/10W		
R90 ,91			RK73FB2A222J	CHIP R 2.2K J 1/10W		
R92			RK73FB2A683J	CHIP R 68K J 1/10W		
R93			RK73FB2A103J	CHIP R 10K J 1/10W		
R94			RK73FB2A182J	CHIP R 1.8K J 1/10W		
R95			RK73FB2A223J	CHIP R 22K J 1/10W		
R96			RK73FB2A103J	CHIP R 10K J 1/10W		
R97			RK73FB2A222J	CHIP R 2.2K J 1/10W		
R98			RK73FB2A221J	CHIP R 220 J 1/10W		
R99 ,100			RK73FB2A473J	CHIP R 47K J 1/10W		
R101			RK73FB2A101J	CHIP R 100 J 1/10W		
R102			RK73FB2A102J	CHIP R 1.0K J 1/10W		
R103			RK73FB2A560J	CHIP R 56 J 1/10W		
R104			RK73FB2A102J	CHIP R 1.0K J 1/10W		
R105			RK73FB2A683J	CHIP R 68K J 1/10W		

L:Scandinavia K:USA P:Canada
Y:PX(Far East, Hawaii) T:England E:Europe
Y:AAFES(Europe) X:Australia M:Other Areas

⚠ indicates safety critical components.

PARTS LIST

* New Parts
Parts without Parts No. are not supplied.
Les articles non mentionnes dans le Parts No. ne sont pas fournis.
Teile ohne Parts No. werden nicht geliefert.

CAR UNIT (X50-3180-00)

Ref. No. 参照番号	Address 位置	New Parts 新	Parts No. 部品番号	Description 部品名／規格	Destination 仕向	Remarks 備考
R106			RK73FB2A221J	CHIP R 220 J 1/10W		
R107			RK73FB2A223J	CHIP R 22K J 1/10W		
R108			RK73FB2A103J	CHIP R 10K J 1/10W		
R109			RK73FB2A471J	CHIP R 470 J 1/10W		
R110			RK73FB2A562J	CHIP R 5.6K J 1/10W		
R111			RK73FB2A821J	CHIP R 820 J 1/10W		
R114			RK73FB2A221J	CHIP R 220 J 1/10W		
R115			RK73FB2A223J	CHIP R 22K J 1/10W		
R116			RK73FB2A103J	CHIP R 10K J 1/10W		
R117			RK73FB2A471J	CHIP R 470 J 1/10W		
R118			RK73FB2A101J	CHIP R 100 J 1/10W		
R119			RK73FB2A221J	CHIP R 220 J 1/10W		
R120			RK73FB2A223J	CHIP R 22K J 1/10W		
R121			RK73FB2A103J	CHIP R 10K J 1/10W		
R122			RK73FB2A102J	CHIP R 1.0K J 1/10W		
R123			RK73FB2A222J	CHIP R 2.2K J 1/10W		
R140			RK73FB2A223J	CHIP R 22K J 1/10W		
R144			RK73FB2A223J	CHIP R 22K J 1/10W		
R201			RK73FB2A471J	CHIP R 470 J 1/10W		
R202,203			R92-0670-05	CHIP R 0 OHM		
			SN74LS90N	IC(DECADE COUNRERS)		
S1			S31-1411-05	SLIDE SWITCH		
S2			S31-2420-05	SLIDE SWITCH		
D1			RLS73	DIODE		
D2			1SV166	DIODE		
D3			RLS73	DIODE		
D4			1SV166	DIODE		
D5			RLS73	DIODE		
D6			1SV166	DIODE		
D7			RLS73	DIODE		
D8 ,9			1SV166	DIODE		
D10			RLZJ12B	CHIP ZENER DIODE(12V)		
D14			RLS73	DIODE		
D15			RLZJ6.8B	CHIP ZENER DIODE(6.8V)		
IC1			CX-7925B	IC(DIGITAL SELECT PLL)		
IC2			M54459L	IC(PRE SCALER)		
IC3			CX-7925B	IC(DIGITAL SELECT PLL)		
IC4			M54459L	IC(PRE SCALER)		
IC5			SN16913P	IC(DUBLE BALANCED MIXERS)		
IC6			CX-7925B	IC(DIGITAL SELECT PLL)		
IC7			M54459L	IC(PRE SCALER)		
IC8			SN16913P	IC(DUBLE BALANCED MIXERS)		
IC9			CX-7925B	IC(DIGITAL SELECT PLL)		
IC11			SN16913P	IC(DUBLE BALANCED MIXERS)		
IC13			MC14568BCP	IC(PLL)		
IC15			TC4013BP	IC(D FLIP-FLOP X2)		
Q1 ,2			2SC2712(Y)	TRANSISTOR		
Q3			2SC2714(Y)	TRANSISTOR		
Q4			2SC2712(Y)	TRANSISTOR		
Q5			2SC2714(Y)	TRANSISTOR		
Q8 -12			2SC2712(Y)	TRANSISTOR		
Q13 -15			2SC2714(Y)	TRANSISTOR		
Q16 -18			2SC2712(Y)	TRANSISTOR		

L:Scandinavia K:USA P:Canada
Y:PX(Far East, Hawaii) T:England E:Europe
Y:AAFES(Europe) X:Australia M:Other Areas

⚠ indicates safety critical components.

PARTS LIST

* New Parts
Parts without Parts No. are not supplied.
Les articles non mentionnes dans le Parts No. ne sont pas fournis.
Teile ohne Parts No. werden nicht geliefert.

CAR UNIT (X50-3180-00)
FILTER UNIT (YG-455C-1) (X51-3050-00)
FILTER UNIT (X51-306X-XX)

Ref. No. 参照番号	Address 位置	New Parts 新	Parts No. 部品番号	Description 部品名／規格	Destination 仕向	Remarks 備考
			X59-3440-00	MODULE UNIT(VCO1)		
			X59-3450-01	MODULE UNIT(LPF)		
			X59-3640-00	MODULE UNIT(MKR)		
FILTER UNIT (YG-455C-1) (X51-3050-00)						
C1 ,2			CK45F1H103Z	CERAMIC 0.010UF Z		
CN1 ,2			E40-0517-05	PIN CONNECTOR		
XF1			L71-0238-25	CRYSTAL FILTER		
FILTER UNIT (X51-306X-XX) 0-12 : K, X, P, E3, M, T 2-71 : E2						
IC3			AN78N05	IC(VOLTAGE REGULATOR/ +5V)		
C3 -13			CK45F1H103Z	CERAMIC 0.010UF Z		
C14 ,15			CE04EW1E100M	ELECTRO 10UF 25WV		
C16			C91-0119-05	CERAMIC 0.047UF K		
C17			CC45CH2H030C	CERAMIC 3PF C		
C18			CC45CH1H560J	CERAMIC 56PF J		
C19			CC45CH1H101J	CERAMIC 100PF J		
C20 ,21			C91-0119-05	CERAMIC 0.047UF K		
C23			CK45F1H103Z	CERAMIC 0.010UF Z		
C101			CM93D2H102J	MICA 1000PF J		
C102			CC45SL2H431J	CERAMIC 430PF J		
C103			CM93D2H222J	MICA 2200PF J		
C104			CC45SL2H221J	CERAMIC 220PF J		
C105			CM93D2H122J	MICA 1200PF J		
C106,107			CC45SL2H331J	CERAMIC 330PF J		
C108			CC45SL2H241J	CERAMIC 240PF J		
C109			CM93D2H122J	MICA 1200PF J		
C110			CC45SL2H470J	CERAMIC 47PF J		
C111			CC45SL2H560J	CERAMIC 56PF J		
C112			CC45SL2H391J	CERAMIC 390PF J		
C113			CC45SL2H221J	CERAMIC 220PF J		
C114			CC45SL2H241J	CERAMIC 240PF J		
C115			CC45SL2H121J	CERAMIC 120PF J		
C116			CC45SL2H301J	CERAMIC 300PF J		
C117			CC45SL2H331J	CERAMIC 330PF J		
C118			CC45SL2H560J	CERAMIC 56PF J		
C119			CC45SL2H331J	CERAMIC 330PF J		
C120			CC45SL2H151J	CERAMIC 150PF J		
C121			CC45SL2H101J	CERAMIC 100PF J		
C122			CC45SL2H391J	CERAMIC 390PF J		
C123			CC45SL2H360J	CERAMIC 36PF J		
C124			CC45SL2H241J	CERAMIC 240PF J		
C125			CC45SL2H131J	CERAMIC 130PF J		
C126			CC45SL2H470J	CERAMIC 47PF J		
C127			CC45SL2H301J	CERAMIC 300PF J		
C128			CC45SL2H240J	CERAMIC 24PF J		
C129			CC45SL2H201J	CERAMIC 200PF J		
C130			CC45SL2H101J	CERAMIC 100PF J		
C131			CC45SL2H330J	CERAMIC 33PF J		
C132			CC45SL2H221J	CERAMIC 220PF J		
C133			CC45SL2H100D	CERAMIC 10PF D		
C134			CC45SL2H121J	CERAMIC 120PF J		
C135			CC45SL2H820J	CERAMIC 82PF J		
C136			CC45SL2H300J	CERAMIC 30PF J		

L:Scandinavia K:USA P:Canada
Y:PX(Far East, Hawaii) T:England E:Europe
Y:AAFES(Europe) X:Australia M:Other Areas

⚠ indicates safety critical components.

PARTS LIST

× New Parts
Parts without Parts No. are not supplied.
Les articles non mentionnes dans le Parts No. ne sont pas fournis.
Teile ohne Parts No. werden nicht geliefert.

FILTER UNIT (X51-306X-XX)

Ref. No. 参照番号	Address 位置	New Parts 新	Parts No. 部品番号	Description 部品名／規格	Destination 仕向	Remarks 備考
C137			CC45SL2H151J	CERAMIC 150PF J		
C138			CC45SL2H100D	CERAMIC 10PF D		
C139			CC45SL2H820J	CERAMIC 82PF J		
C140			CC45SL2H151J	CERAMIC 150PF J		
C141,142			CC45SL2H470J	CERAMIC 47PF J		
C143			CC45SL2H390J	CERAMIC 39PF J		
C144			CC45SL2H470J	CERAMIC 47PF J		
TC1			C05-0030-15	TRIM CAP 20PF		
CN1 ,2			E04-0157-05	RF COAXIAL JACK		
CN3			E40-3237-05	PIN CONNECTOR(2P)		
CN4			E04-0157-05	RF COAXIAL JACK		
CN5			E40-3238-05	PIN CONNECTOR(3P)		
CN6			E40-3240-05	PIN CONNECTOR(5P)		
CN7			E40-5067-05	PIN CONNECTOR(10P)		
CN8			E40-3240-05	PIN CONNECTOR(5P)		
W23			E31-6080-05	WIRE WITH CONNECTOR		
			J25-6770-22	PRINTED WIRING BOARD		
L1			L39-0406-05	TROIDAL COIL		
L2 -8			L40-1011-14	SMALL FIXED INDUCTOR(100UH)		
L9 ,10			L40-1021-14	SMALL FIXED INDUCTOR(1MH)		
L11			L40-1011-14	SMALL FIXED INDUCTOR(100UH)		
L101			L39-0456-05	TROIDAL COIL(3.6UH)		
L102			L39-0457-05	TROIDAL COIL(4.5UH)		
L103			L39-0458-05	TROIDAL COIL(1.9UH)		
L104			L39-0459-05	TROIDAL COIL(2.4UH)		
L105			L39-0460-05	TROIDAL COIL(1.0UH)		
L106			L39-0461-05	TROIDAL COIL(1.2UH)		
L107			L39-0462-05	TROIDAL COIL(0.7UH)		
L108			L39-0463-05	TROIDAL COIL(0.9UH)		
L109			L34-1278-05	COIL		
L110			L34-1277-05	COIL		
L111			L34-1280-05	COIL		
L112			L34-1279-05	COIL		
L113			L34-1282-05	COIL		
L114			L34-1281-05	COIL		
T1			L92-0102-05	TROIDAL CORE		
T2			L92-0104-05	TROIDAL CORE		
T3			L92-0104-05	TROIDAL CORE		
T4			L92-0104-05	TROIDAL CORE		
T5			L92-0104-05	TROIDAL CORE		
T6			L92-0104-05	TROIDAL CORE		
T7			L92-0105-05	TROIDAL CORE		
T8			L92-0105-05	TROIDAL CORE		
T9			L92-0105-05	TROIDAL CORE		
CP1			R90-0286-05	MULTI-COMP 4.7KX4		
CP2			R90-0455-05	MULTI-COMP 4.7KX8 J 1/4W		
CP3			R90-0713-05	MULTI-COMP UF X9		
R1			RD14CB2E270J	RD 27 J 1/4W		
R2			RD14CB2E330J	RD 33 J 1/4W		
R3			RD14BB2C100J	RD 10 J 1/6W		
R4			RD14BB2C103J	RD 10K J 1/6W		
R5			RD14BB2C472J	RD 4.7K J 1/6W		
VR1			R12-0104-05	TRIM POT. 220		

L:Scandinavia K:USA P:Canada
Y:PX(Far East, Hawaii) T:England E:Europe
Y:AAFES(Europe) X:Australia M:Other Areas

⚠ indicates safety critical components.

PARTS LIST

× New Parts
Parts without Parts No. are not supplied.
Les articles non mentionnes dans le Parts No. ne sont pas fournis.
Teile ohne Parts No. werden nicht geliefert.

FILTER UNIT (X51-306X-XX)
FILTER UNIT (YG-455S-1) (X51-3070-00)
AT UNIT (X53-3340-01)

Ref. No. 参照番号	Address 位置	New Parts 新	Parts No. 部品番号	Description 部品名／規格	Destination 仕向	Remarks 備考
W1 ,2			R92-0150-05	JUMPER REST 0 OHM		
W22			R92-0150-05	JUMPER REST 0 OHM		
K1 -14			S51-1420-05	RELAY		
K15			S51-1429-05	RELAY		
D8 ,9			1SS101	DIODE		
D10			1S1555	DIODE		
D10			1S1555	DIODE		
D11 ,12			MC921	DIODE		
D13 ,14			1S1555	DIODE		
D13 ,14			1S1555	DIODE		
D15			DSP-301N	DIODE		
IC1			SN74LS145N	IC(BCD TO DECIMAL DECODER/DRIV		
IC2			M54581P	IC(TRANSISTOR ARRAY)		
Q1			2SA562(Y)	TRANSISTOR		
W4			001-0005-05	COATING WIRE	E2	
W5 -21			001-0005-05	COATING WIRE		
FILTER UNIT (YG-455S-1) (X51-3070-00)						
C1 ,2			CK45F1H103Z	CERAMIC 0.010UF Z		
CN1 ,2			E40-0517-05	PIN CONNECTOR FOR INSIDE		
XF1			L71-0292-05	CRYSTAL FILTER(YG-455S-1)		
AT UNIT (X53-3340-01)						
C1			CC45SL2H330J	CERAMIC 33PF J		
C2 -8			CK73FB1E103K	CHIP C 0.01UF K		
C9 ,10			CK73FB1H102K	CHIP C 1000PF K		
C11			CK73FB1E103K	CHIP C 0.01UF K		
C12			CE04EW1C470M	ELECTRO 47UF 16WV		
C13 -15			CK73FB1E103K	CHIP C 0.01UF K		
C16			CK73EF1E474Z	CHIP C 0.47UF Z		
C17 -19			CK73FB1E103K	CHIP C 0.01UF K		
C20			CE04EW1C101M	ELECTRO 100UF 16WV		
C21 -23			CK73FB1E103K	CHIP C 0.01UF K		
C24			CK73EF1E474Z	CHIP C 0.47UF Z		
C25			CK73FB1E103K	CHIP C 0.01UF K		
C26			CE04EW1C101M	ELECTRO 100UF 16WV		
C27 -28			CK73FB1E103K	CHIP C 0.01UF K		
C29 -37			CK73FB1E103K	CHIP C 0.01UF K		
C38			CK73FB1H103K	CHIP C 0.010UF K		
C101-103			CK73FB1H103K	CHIP C 0.010UF K		
C105-108			CK73FB1H103K	CHIP C 0.010UF K		
TC1			C05-0031-15	TRIM CAP 10PF		
VC1 ,2	1M		C02-0023-05	VARIABLE		
			E33-1959-05	FINISHED WIRE SET		
CN1 ,2			E04-0157-05	RF COAXIAL JACK		
CN3			E40-3239-05	PIN CONNECTOR(4P)		
CN4			E40-3240-05	PIN CONNECTOR(5P)		
CN5			E40-3238-05	PIN CONNECTOR(3P)		
CN6			E40-3237-05	PIN CONNECTOR(2P)		
CN7			E40-5068-05	PIN CONNECTOR(11P)		
CN101			E40-5066-05	PIN CONNECTOR(9P)		
		*	F20-1081-04	INSULATING BOARD		
A1	1N	*	F11-1142-22	SHIELDING COVER		

L:Scandinavia K:USA P:Canada
Y:PX(Far East, Hawaii) T:England E:Europe
Y:AAFES(Europe) X:Australia M:Other Areas

⚠ indicates safety critical components.

PARTS LIST

* New Parts
Parts without Parts No. are not supplied.
Les articles non mentionnes dans le Parts No. ne sont pas fournis.
Teile ohne Parts No. werden nicht geliefert.

AT UNIT (X53-3340-01)

Ref. No. 参照番号	Address 位置	New Parts 新	Parts No. 部品番号	Description 部品名／規格	Destination 仕向	Remarks 備考
A2	1M		F10-1401-13	SHIELDING PLATE		
A3	1M		F11-1143-14	SHIELDING COVER A		
A4	2N		F11-1144-14	SHIELDING COVER B		
A5	2L		D40-0633-15	GEAR ASSY		
-			J61-0307-05	BAND		
L1			L39-0496-05	COIL		
L2			L39-0415-25	TROIDAL COIL		
L3 -6			L40-1011-13	SMALL FIXED INDUCTOR		
L7 -11			L40-1011-14	SMALL FIXED INDUCTOR		
L12 -14			L40-1011-13	SMALL FIXED INDUCTOR		
L101-103			L40-1011-14	SMALL FIXED INDUCTOR		
L105-108			L40-1011-14	SMALL FIXED INDUCTOR		
L109			L34-1276-05	COIL		
L110			L39-0479-05	TROIDAL COIL		
L111			L39-0495-05	COIL		
L112			L39-0494-15	COIL		
T2			L92-0103-05	TROIDAL CORE		
T2			L92-0103-05	TROIDAL CORE		
T110			L92-0117-05	TROIDAL CORE		
T110			L92-0117-05	TROIDAL CORE		
T110			L92-0117-05	TROIDAL CORE		
R	1M,1N		N87-3006-46	BRAZIER HEAD TAPTITE SCREW		
W	1M,2M		N88-3006-46	FLAT HEAD TAPTITE SCREW		
R1 ,2			RD14BB2E101J	RD 100 J 1/4W		
R3			RK73FB2A102J	CHIP R 1.0K J 1/10W		
R4			RD14BB2E560J	RD 56 J 1/4W		
R5 ,6			RK73FB2A181J	CHIP R 180 J 1/10W		
R7 -10			RK73FB2A103J	CHIP R 10K J 1/10W		
R11			RK73FB2A563J	CHIP R 56K J 1/10W		
R12			RK73FB2A121J	CHIP R 120 J 1/10W		
R13			RK73FB2A101J	CHIP R 100 J 1/10W		
R14			RK73FB2A563J	CHIP R 56K J 1/10W		
R15			RK73FB2A121J	CHIP R 120 J 1/10W		
R16			RK73FB2A101J	CHIP R 100 J 1/10W		
R17			RK73FB2A330J	CHIP R 33 J 1/10W		
R18			RK73FB2A103J	CHIP R 10K J 1/10W		
R19			RK73FB2A330J	CHIP R 33 J 1/10W		
R20 -23			RK73FB2A103J	CHIP R 10K J 1/10W		
R24 ,25			RD14BB2E100J	RD 10 J 1/4W		
R26 -30			RK73FB2A103J	CHIP R 10K J 1/10W		
R31			RK73FB2A472J	CHIP R 4.7K J 1/10W		
R32			RK73FB2A103J	CHIP R 10K J 1/10W		
R33			RD14BB2E101J	RD 100 J 1/4W		
R34			RK73FB2A472J	CHIP R 4.7K J 1/10W		
VR101,102	2L		R01-3435-05	TRIM POT. 10K F		
W12 -17			R92-0679-05	CHIP R 0 OHM		
W18 -28			R92-0670-05	CHIP R 0 OHM		
W29 -31			R92-0679-05	CHIP R 0 OHM		
W32			R92-0670-05	CHIP R 0 OHM		
W34			R92-0670-05	CHIP R 0 OHM		
W35 ,36			R92-0679-05	CHIP R 0 OHM		
W37			R92-0670-05	CHIP R 0 OHM		

L:Scandinavia K:USA P:Canada
Y:PX(Far East, Hawaii) T:England E:Europe
Y:AAFES(Europe) X:Australia M:Other Areas

⚠ indicates safety critical components.

PARTS LIST

⁎ New Parts
Parts without Parts No. are not supplied.
Les articles non mentionnes dans le Parts No. ne sont pas fournis.
Teile ohne Parts No. werden nicht geliefert.

AT UNIT (X53-3340-01)
CONTROL UNIT (X53-3380-00)

Ref. No. 参照番号	Address 位置	New Parts 新	Parts No. 部品番号	Description 部品名／規格	Destination 仕向	Remarks 備考
K1			S51-2407-05	RELAY		
K101-103			S76-0401-05	RELAY		
K105-108			S76-0401-05	RELAY		
M1 ,2	2L		T42-0453-05	DC MOTOR ASSY		
D1 ,2			1N60	DIODE		
D3 -8			1SS226	DIODE		
D10			1S1555	DIODE		
D101-103			1S1555	DIODE		
D109,110			RLS73	CHIP DIODE		
IC1			SN74S74N	IC(ONE SHOT MULTI)		
IC2 ,3			TC4066BP	IC(ANALOG/ DIGITAL SW)		
IC4 ,5			BA6109U2	IC(MOTOR DRIVER)		
IC6			NJM2903S	IC(DUAL COMPALATOR)		
IC7			MC78L05M	IC(VOLTAGE REGULATOR/ +5V)		
Q1 ,2			2SC2714(Y)	TRANSISTOR		
Q3			DTC114EK	DIGITAL TRANSISTOR		
Q4			2SA1204(Y)	TRANSISTOR		
Q5			DTC114EK	DIGITAL TRANSISTOR		
W6 -11			001-0005-05	COATING WIRE		
D105-108			1S1555	DIODE		
CONTROL UNIT (X53-3380-00)						
C1			CK73FB1H103K	CHIP C 0.010UF K		
C2 -4			CK73FF1E104Z	CHIP C 0.1UF Z		
C5 ,6			CE04EW1C101M	ELECTRO 100UF 16WV		
C7			CK73FF1E104Z	CHIP C 0.1UF Z		
C8			CK73FB1H103K	CHIP C 0.010UF K		
C9			CE04EW1H4R7M	ELECTRO 4.7UF 50WV		
C10			CE04EW1C100M	ELECTRO 10UF 16WV		
C11			CE04EW1C220M	ELECTRO 22UF 16WV		
C12 -14			CK73FB1H103K	CHIP C 0.010UF K		
C15			CC73FCH1H101J	CHIP C 100PF J		
C16			CK73FB1H103K	CHIP C 0.010UF K		
C17			CK73FB1H102K	CHIP C 1000PF K		
C18 ,19			CK73FF1E104Z	CHIP C 0.1UF Z		
C20 ,21			CK73FB1H103K	CHIP C 0.010UF K		
C22			CE04EW1C470M	ELECTRO 47UF 16WV		
C23			CK73FB1H471K	CHIP C 470PF K		
C24			C92-0004-05	ELECTRO 1.0UF 16WV		
C25			CK73FB1H102K	CHIP C 1000PF K		
C26			CK73FB1H472K	CHIP C 4700PF K		
C27			CE04EW1C470M	ELECTRO 47UF 16WV		
C29			CE04EW1H4R7M	ELECTRO 4.7UF 50WV		
C30			CK73FB1H103K	CHIP C 0.010UF K		
C31			CK73FF1E104Z	CHIP C 0.1UF Z		
C32			CC73FSL1H151J	CHIP C 150PF J		
C33			CE04EW1H0R1M	ELECTRO 0.1UF 50WV		
C34			CE04EW1H010M	ELECTRO 1.0UF 50WV		
C35 ,36			CK73FB1H472K	CHIP C 4700PF K		
C37			C92-0505-05	TANTAL 10UF 16WV		
C38			C90-0866-05	ELECTRO 470UF 6.3WV		
C39			CE04EW1C100M	ELECTRO 10UF 16WV		
C40			C90-0866-05	ELECTRO 470UF 6.3WV		

L:Scandinavia K:USA P:Canada
Y:PX(Far East, Hawaii) T:England E:Europe
Y:AAFES(Europe) X:Australia M:Other Areas

⚠ indicates safety critical components.

PARTS LIST

× New Parts
Parts without Parts No. are not supplied.
Les articles non mentionnes dans le Parts No. ne sont pas fournis.
Teile ohne Parts No. werden nicht geliefert.

CONTROL UNIT (X53-3380-00)

Ref. No. 参照番号	Address 位置	New Parts 新	Parts No. 部品番号	Description 部品名／規格	Destination 仕向	Remarks 備考
C41			CE04EW1C102M	ELECTRO 1000UF 16WV		
C42			CK73FB1H223K	CHIP C 0.022UF K		
C43			CE04EW1C102M	ELECTRO 1000UF 16WV		
C44			CK73FB1H223K	CHIP C 0.022UF K		
C45			CK73FF1E104Z	CHIP C 0.1UF Z		
C46			CK73FB1H103K	CHIP C 0.010UF K		
C47			CE04EW1A221M	ELECTRO 220UF 10WV		
C48			CK73FF1E104Z	CHIP C 0.1UF Z		
C49			CE04EW1A221M	ELECTRO 220UF 10WV		
C50			CE04EW1H2R2M	ELECTRO 2.2UF 50WV		
C51			CE04EW1C101M	ELECTRO 100UF 16WV		
C52			CE04EW1H010M	ELECTRO 1.0UF 50WV		
C53 ,54			CE04EW1C100M	ELECTRO 10UF 16WV		
C56			CK73EB1H104K	CHIP C 0.10UF K		
C57			CK73EB1H683K	CHIP C 0.068UF K		
C58 ,59			CK73FB1H333K	CHIP C 0.033UF K		
C61			CE04EW1C470M	ELECTRO 47UF 16WV		
C62			CK73EF1E474Z	CHIP C 0.47UF Z		
C63			CK73EF1C105Z	CHIP C 1.0UF Z		
C64			CK73FB1H103K	CHIP C 0.010UF K		
C65			CK73FF1E104Z	CHIP C 0.1UF Z		
C66 -70			CK73FB1H103K	CHIP C 0.010UF K		
C71			CE04EW1C470M	ELECTRO 47UF 16WV		
C72			CK73FB1H103K	CHIP C 0.010UF K		
C73			CK73FB1E473K	CHIP C 0.047UF K		
C74			CK73FB1H103K	CHIP C 0.01UF K		
CN1			E40-3238-05	PIN CONNECTOR FOR INSIDE		
CN2			E40-3240-05	PIN CONNECTOR FOR INSIDE		
CN4			E40-3237-05	PIN CONNECTOR FOR INSIDE		
CN5 ,6			E40-3239-05	PIN CONNECTOR FOR INSIDE		
CN7			E40-3240-05	PIN CONNECTOR FOR INSIDE		
CN8			E40-3242-05	PIN CONNECTOR FOR INSIDE		
CN9			E40-3237-05	PIN CONNECTOR FOR INSIDE		
CN10			E40-3239-05	PIN CONNECTOR FOR INSIDE		
CN12			E40-3241-05	PIN CONNECTOR FOR INSIDE		
CN13			E40-3237-05	PIN CONNECTOR FOR INSIDE		
CN14			E40-3238-05	PIN CONNECTOR FOR INSIDE		
CN15,16			E40-3240-05	PIN CONNECTOR FOR INSIDE		
CN17			E40-3241-05	PIN CONNECTOR FOR INSIDE		
CN18			E40-3242-05	PIN CONNECTOR FOR INSIDE		
CN19			E40-5333-05	PIN CONNECTOR(14P)		
CN20			E40-3240-05	PIN CONNECTOR FOR INSIDE		
CN21			E40-3238-05	PIN CONNECTOR FOR INSIDE		
CN22			E40-3242-05	PIN CONNECTOR FOR INSIDE		
CN23			E40-3241-05	PIN CONNECTOR FOR INSIDE		
CN24			E40-5131-05	PIN CONNECTOR(16P)		
			F01-0990-04	HEAT SINK		
			G02-0574-04	FLAT SPRING		
L1 ,2			L40-1011-14	SMALL FIXED INDUCTOR(100UH)		
L3 ,4			L40-3391-12	SMALL FIXED INDUCTOR(3.3UH)		
R1			RK73FB2A822J	CHIP R 8.2K J 1/10W		
R2			RK73FB2A153J	CHIP R 15K J 1/10W		

L:Scandinavia K:USA P:Canada
Y:PX(Far East, Hawaii) T:England E:Europe
Y:AAFES(Europe) X:Australia M:Other Areas

⚠ indicates safety critical components.

PARTS LIST

× New Parts
Parts without Parts No. are not supplied.
Les articles non mentionnes dans le Parts No. ne sont pas fournis.
Teile ohne Parts No. werden nicht geliefert.

CONTROL UNIT (X53-3380-00)

Ref. No. 参照番号	Address 位置	New Parts 新	Parts No. 部品番号	Description 部品名／規格	Destination 仕向	Remarks 備考
R3			RK73FB2A123J	CHIP R 12K J 1/10W		
R4			RK73FB2A183J	CHIP R 18K J 1/10W		
R5			RK73FB2A103J	CHIP R 10K J 1/10W		
R6 ,7			RK73FB2A474J	CHIP R 470K J 1/10W		
R8			RK73FB2A562J	CHIP R 5.6K J 1/10W		
R9			RK73FB2A222J	CHIP R 2.2K J 1/10W		
R10			RK73FB2A183J	CHIP R 18K J 1/10W		
R12			RK73FB2A152J	CHIP R 1.5K J 1/10W		
R13 ,14			RK73FB2A103J	CHIP R 10K J 1/10W		
R15			RK73FB2A472J	CHIP R 4.7K J 1/10W		
R16			RK73FB2A103J	CHIP R 10K J 1/10W		
R17			RK73FB2A102J	CHIP R 1.0K J 1/10W		
R18			RK73FB2A472J	CHIP R 4.7K J 1/10W		
R19			RK73FB2A331J	CHIP R 330 J 1/10W		
R20			RK73FB2A104J	CHIP R 100K J 1/10W		
R21			RK73FB2A101J	CHIP R 100 J 1/10W		
R22			RK73FB2A123J	CHIP R 12K J 1/10W		
R23			RK73FB2A472J	CHIP R 4.7K J 1/10W		
R24			RK73FB2A102J	CHIP R 1.0K J 1/10W		
R25			RK73FB2A331J	CHIP R 330 J 1/10W		
R27			RK73FB2A562J	CHIP R 5.6K J 1/10W		
R28			RK73FB2A182J	CHIP R 1.8K J 1/10W		
R29			RK73FB2A332J	CHIP R 3.3K J 1/10W		
R30			RK73FB2A682J	CHIP R 6.8K J 1/10W		
R31			RK73FB2A153J	CHIP R 15K J 1/10W		
R32			RK73FB2A105J	CHIP R 1.0M J 1/10W		
R33			RK73FB2A102J	CHIP R 1.0K J 1/10W		
R34			RK73FB2A104J	CHIP R 100K J 1/10W		
R35			RK73FB2A102J	CHIP R 1.0K J 1/10W		
R36			RK73FB2A104J	CHIP R 100K J 1/10W		
R37			RK73FB2A474J	CHIP R 470K J 1/10W		
R38			RK73FB2A473J	CHIP R 47K J 1/10W		
R39			RK73FB2A392J	CHIP R 3.9K J 1/10W		
R40			RK73FB2A122J	CHIP R 1.2K J 1/10W		
R41			RK73FB2A123J	CHIP R 12K J 1/10W		
R42			RK73FB2A101J	CHIP R 100 J 1/10W		
R43			RK73FB2A473J	CHIP R 47K J 1/10W		
R44			RK73FB2A272J	CHIP R 2.7K J 1/10W		
R45 ,46			RK73FB2A103J	CHIP R 10K J 1/10W		
R47			RK73FB2A222J	CHIP R 2.2K J 1/10W		
R50			RK73FB2A104J	CHIP R 100K J 1/10W		
R51			RK73FB2A473J	CHIP R 47K J 1/10W		
R52			RK73FB2A224J	CHIP R 220K J 1/10W		
R53			RK73FB2A472J	CHIP R 4.7K J 1/10W		
R54			RK73FB2A473J	CHIP R 47K J 1/10W		
R55 -57			RK73FB2A103J	CHIP R 10K J 1/10W		
R58			RK73FB2A104J	CHIP R 100K J 1/10W		
R59			RK73FB2A333J	CHIP R 33K J 1/10W		
R60 -62			RK73FB2A104J	CHIP R 100K J 1/10W		
R63			RK73FB2A101J	CHIP R 100 J 1/10W		
R64 -66			RK73FB2A103J	CHIP R 10K J 1/10W		
R67			RK73FB2A473J	CHIP R 47K J 1/10W		
R68			RK73FB2A334J	CHIP R 330K J 1/10W		
R69 ,70			RK73FB2A103J	CHIP R 10K J 1/10W		
R71			RK73FB2A472J	CHIP R 4.7K J 1/10W		

L:Scandinavia K:USA P:Canada
Y:PX(Far East, Hawaii) T:England E:Europe
V:AAFES(Europe) X:Australia M:Other Areas

⚠ indicates safety critical components.

PARTS LIST

× New Parts
Parts without Parts No. are not supplied.
Les articles non mentionnes dans le Parts No. ne sont pas fournis.
Teile ohne Parts No. werden nicht geliefert.

CONTROL UNIT (X53-3380-00)

Ref. No. 参照番号	Address 位置	New Parts 新	Parts No. 部品番号	Description 部品名／規格	Destination 仕向	Remarks 備考
R72			RK73FB2A473J	CHIP R 47K J 1/10W		
R73			RK73FB2A103J	CHIP R 10K J 1/10W		
R74 -76			RK73FB2A6R8J	CHIP R 6.8 J 1/10W		
R77			RK73FB2A2R2J	CHIP R 2.2 J 1/10W		
R78			RK73FB2A221J	CHIP R 220 J 1/10W		
R79			RK73FB2A2R2J	CHIP R 2.2 J 1/10W		
R80 -82			RK73FB2A6R8J	CHIP R 6.8 J 1/10W		
R83			RK73FB2A2R2J	CHIP R 2.2 J 1/10W		
R84			RK73FB2A221J	CHIP R 220 J 1/10W		
R85			RK73FB2A2R2J	CHIP R 2.2 J 1/10W		
R86 ,87			RK73FB2A103J	CHIP R 10K J 1/10W		
R88			RK73FB2A472J	CHIP R 4.7K J 1/10W		
R89 ,90			RK73FB2A103J	CHIP R 10K J 1/10W		
R91			RK73FB2A470J	CHIP R 47 J 1/10W		
R92			RK73FB2A123J	CHIP R 12K J 1/10W		
R94			RK73FB2A223J	CHIP R 22K J 1/10W		
R95			RK73FB2A103J	CHIP R 10K J 1/10W		
R96			RK73FB2A473J	CHIP R 47K J 1/10W		
R97 -99			RK73FB2A104J	CHIP R 100K J 1/10W		
R100			RK73FB2A103J	CHIP R 10K J 1/10W		
R101,102			RK73FB2A104J	CHIP R 100K J 1/10W		
R103			RK73FB2A154J	CHIP R 150K J 1/10W		
R104			RK73FB2A103J	CHIP R 10K J 1/10W		
R105			RK73FB2A474J	CHIP R 470K J 1/10W		
R106			RK73FB2A103J	CHIP R 10K J 1/10W		
R107,108			RK73FB2A104J	CHIP R 100K J 1/10W		
R109			RK73FB2A684J	CHIP R 680K J 1/10W		
R110			RK73FB2A104J	CHIP R 100K J 1/10W		
R111			RK73FB2A684J	CHIP R 680K J 1/10W		
R112			RK73FB2A104J	CHIP R 100K J 1/10W		
R113			RK73FB2A153J	CHIP R 15K J 1/10W		
R115			RK73FB2A473J	CHIP R 47K J 1/10W		
R116			RK73FB2A104J	CHIP R 100K J 1/10W		
R117,118			RK73FB2A103J	CHIP R 10K J 1/10W		
R119			RK73FB2A105J	CHIP R 1.0M J 1/10W		
R120,121			RK73FB2A101J	CHIP R 100 J 1/10W		
R122			RK73FB2A273J	CHIP R 27K J 1/10W		
R123			RK73FB2A103J	CHIP R 10K J 1/10W		
R124			RK73FB2A102J	CHIP R 1.0K J 1/10W		
R125,126			RK73FB2A562J	CHIP R 5.6K J 1/10W		
R127			RK73FB2A221J	CHIP R 220 J 1/10W		
R128			RK73FB2A103J	CHIP R 10K J 1/10W		
R129			RK73FB2A272J	CHIP R 2.7K J 1/10W		
R130			RK73FB2A682J	CHIP R 6.8K J 1/10W		
R131,132			RK73FB2A562J	CHIP R 5.6K J 1/10W		
R133			RK73FB2A103J	CHIP R 10K J 1/10W		
R134			RK73FB2A683J	CHIP R 68K J 1/10W		
R135			RK73FB2A223J	CHIP R 22K J 1/10W		
R136			RK73FB2A101J	CHIP R 100 J 1/10W		
R137			RK73FB2A223J	CHIP R 22K J 1/10W		
VR1			R12-3103-05	TRIM POT. 47K		
VR2			R12-3100-05	TRIM POT. 10K		
VR3 ,4			R12-3103-05	TRIM POT. 47K		
VR5			R12-1073-05	TRIM POT. 4.7K		
VR6			R12-3103-05	TRIM POT. 47K		

L:Scandinavia K:USA P:Canada
Y:PX(Far East, Hawaii) T:England E:Europe
Y:AAFES(Europe) X:Australia M:Other Areas

⚠ indicates safety critical components.

PARTS LIST

× New Parts
Parts without Parts No. are not supplied.
Les articles non mentionnes dans le Parts No. ne sont pas fournis.
Teile ohne Parts No. werden nicht geliefert.

CONTROL UNIT (X53-3380-00)

Ref. No. 参照番号	Address 位置	New Parts 新	Parts No. 部品番号	Description 部品名／規格	Destination 仕向	Remarks 備考
VR7			R12-3133-05	TRIM POT. 47K		
VR8			R12-3102-05	TRIM POT. 33K		
W1			R92-0150-05	JUMPER REST 0 OHM		
K1			S51-1436-05	RELAY		
S1			S31-1411-05	SLIDE SWITCH		
D1			RLS73	CHIP DIODE		
D2			DAN202K	CHIP DIODE		
D3			RLS73	CHIP DIODE		
D4			RLZJ12B	CHIP ZENER DIODE(12V)		
D5			RLS73	CHIP DIODE		
D6			B30-2027-05	LED		
D7			RLZJ4.7B	CHIP ZENER DIODE(7.7V)		
D8			RLS73	CHIP DIODE		
D9			HSM88AS	CHIP DIODE		
D10			RLZ4.7B	CHIP ZENER DIODE(7.7V)		
D11			DAN202K	CHIP DIODE		
D14			RLZ15B	CHIP ZENER DIODE(15V)		
D15 -19			RLS73	CHIP DIODE		
D20			DAN202K	CHIP DIODE		
D21 -29			RLS73	CHIP DIODE		
D30 -33			RLS73	CHIP DIODE		
D34 ,35			DAN202K	CHIP DIODE		
D36			RLS73	CHIP DIODE		
D37			RLZJ5.1B	CHIP ZENER DIODE(5.1V)		
D38			RLS73	CHIP DIODE		
D39 ,40			RLZ4.7B	CHIP ZENER DIODE(7.7V)		
D41 -45			RLS73	CHIP DIODE		
D46			RLZ4.7B	CHIP ZENER DIODE(7.7V)		
D47 ,48			RLS73	CHIP DIODE		
IC1			NJM4558M	IC(OP AMP X2)		
IC2			AN78N08	IC(VOLTAGE REGULATOR/ +35V)		
IC3			NJM4558M	IC(OP AMP X2)		
IC4			UPC2002V	IC(OP AMP X2)		
IC5			NJM4558M	IC(OP AMP X2)		
IC6			UPC2002V	IC(OP AMP X2)		
IC7 ,8			TC4066BF	IC(BILATERAL SWITCH X4)		
IC9			TC4538BF	IC(ONE SHOT MULT)		
IC10			TC4011BF	IC(NAND X4)		
IC11			TC4069UBF	IC(INVERTER X6)		
IC12			TC4066BF	IC(BILATERAL SWITCH X4)		
IC13			TC4069UBF	IC(INVERTER X6)		
IC14			TC4011BF	IC(NAND X4)		
IC15			TC4069UBF	IC(INVERTER X6)		
IC16			TC4066BF	IC(BILATERAL SWITCH X4)		
Q1 ,2			2SC2712(Y)	TRANSISTOR		
Q3 -7			DTC124EK	DIGITAL TRANSISTOR		
Q8 -10			2SC2712(Y)	TRANSISTOR		
Q11		*	2SK208(G,Y)	FET		
Q12			2SC2712(Y)	TRANSISTOR		
Q13			DTC144EK	DIGITAL TRANSISTOR		
Q14 -16			DTC124EK	DIGITAL TRANSISTOR		
Q17			2SA1204(Y)	TRANSISTOR		
Q18 ,19			DTC124EK	DIGITAL TRANSISTOR		
Q20			DTA124EK	DIGITAL TRANSISTOR		

L:Scandinavia K:USA P:Canada
Y:PX(Far East, Hawaii) T:England E:Europe
Y:AAFES(Europe) X:Australia M:Other Areas

⚠ indicates safety critical components.

PARTS LIST

* New Parts
Parts without Parts No. are not supplied.
Les articles non mentionnes dans le Parts No. ne sont pas fournis.
Teile ohne Parts No. werden nicht geliefert.

CONTROL UNIT (X53-3380-00)
DSP UNIT (X53-3390-00)

Ref. No. 参照番号	Address 位置	New Parts 新	Parts No. 部品番号	Description 部品名／規格	Destination 仕向	Remarks 備考
Q21 ,22			DTC124EK	DIGITAL TRANSISTOR		
Q23			2SC2712(Y)	TRANSISTOR		
Q24			DTC124EK	DIGITAL TRANSISTOR		
Q25			DTC144EK	DIGITAL TRANSISTOR		
Q26			DTC124EK	DIGITAL TRANSISTOR		
Q27			2SD1757K	TRANSISTOR		
Q28			DTC124EK	DIGITAL TRANSISTOR		
			X59-3660-00	MODULE UNIT(CWT)		
			X59-3670-00	MODULE UNIT(MAP)		
			X59-3680-00	MODULE UNIT(TRX)		
			X59-3700-00	MODULE UNIT(ALC)		
DSP UNIT (X53-3390-00)						
C1 ,2			CE04EW1E331M	ELECTRO 330UF 25WV		
C3 ,4			CK73FB1E223K	CHIP C 0.022UF K		
C5 ,6			CK73FB1H102K	CHIP C 1000PF K		
C7 ,8			CK73EF1E474Z	CHIP C 0.47UF Z		
C9 -18			CE04EW1E220M	ELECTRO 22UF 25WV		
C19			C90-2045-05	ELECTRO 2.2UF 25WV		
C20 -22			CK73FB1E223K	CHIP C 0.022UF K		
C23			CE04EW1E220M	ELECTRO 22UF 25WV		
C24			C90-2045-05	ELECTRO 2.2UF 25WV		
C25			CE04EW1E220M	ELECTRO 22UF 25WV		
C26			C90-2045-05	ELECTRO 2.2UF 25WV		
C27 ,28			CE04EW1E101M	ELECTRO 100UF 25WV		
C29 -32			CK73FB1E223K	CHIP C 0.022UF K		
C33 ,34			C90-2045-05	ELECTRO 2.2UF 25WV		
C35 ,36			CK73FB1E223K	CHIP C 0.022UF K		
C37 ,38			CK73FB1H102K	CHIP C 1000PF K		
C40 ,41			CC73FSL1H101J	CHIP C 100PF J		
C42 -45			CK73EB1E683K	CHIP C 0.068UF K		
C46			CK73FB1E223K	CHIP C 0.022UF K		
C47 ,48			CC73FSL1H680J	CHIP C 68PF J		
C49 ,50			CC73FSL1H221J	CHIP C 220PF J		
C51			CK73FB1E223K	CHIP C 0.022UF K		
C52			CC73FCH1H102J	CHIP C 1000PF J		
C53			CE04BW1E100M	NP-ELEC 10UF 25WV		
C54			CE04EW1H3R3M	ELECTRO 3.3UF 50WV		
C55			C90-2045-05	ELECTRO 2.2UF 25WV		
C56			CE04EW1H3R3M	ELECTRO 3.3UF 50WV		
C57			C92-0004-05	ELECTRO 1.0UF 16WV		
C58			CK73FB1H153K	CHIP C 0.015UF K		
C59			CC73FSL1H471J	CHIP C 47PF J		
C60			CC73FSL1H101J	CHIP C 100PF J		
C61 -63			CC73FSL1H331J	CHIP C 330PF J		
C64			CQ92M1H103K	MYLAR 0.010UF K		
C65			CC73FCH1H391J	CHIP C 390PF J		
C66			CQ92M1H103K	MYLAR 0.010UF K		
C67			CC73FCH1H221J	CHIP C 220PF J		
C68			CC73FSL1H101J	CHIP C 100PF J		
C69 -73			CK73FB1E223K	CHIP C 0.022UF K		
C74			CE04BW1E100M	NP-ELEC 10UF 25WV		
C75 -78			CK73FB1H102K	CHIP C 1000PF K		
C79			CC73ECH1H202J	CHIP C 2000PF J		
C80			CC73FCH1H221J	CHIP C 220PF J		

L:Scandinavia K:USA P:Canada
Y:PX(Far East, Hawaii) T:England E:Europe
Y:AAFES(Europe) X:Australia M:Other Areas

⚠ indicates safety critical components.

TS-950SDX

PARTS LIST

* New Parts
Parts without Parts No. are not supplied.
Les articles non mentionnes dans le Parts No. ne sont pas fournis.
Teile ohne Parts No. werden nicht gellefert.

DSP UNIT (X53-3390-00)

Ref. No. 参照番号	Address 位置	New Parts 新	Parts No. 部品番号	Description 部品名／規格			Destination 仕向	Remarks 備考
C81			CC73ECH1H202J	CHIP C	2000PF	J		
C82 -83			CK73FB1E223K	CHIP C	0.022UF	K		
C100			CK73FB1E223K	CHIP C	0.022UF	K		
C101			CE04EW1A221M	ELECTRO	220UF	10WV		
C102-108			CC73FSL1H101J	CHIP C	100PF	J		
C109			CK73FF1E104Z	CHIP C	0.1UF	Z		
C110			CK73EB1E683K	CHIP C	0.068UF	K		
C111			CK73FB1H102K	CHIP C	1000PF	K		
C112,113			CC73FCH1H100D	CHIP C	10PF	D		
C114-122			CK73FB1H221K	CHIP C	220PF	K		
C123			C92-0004-05	ELECTRO	1.0UF	16WV		
C124			CK73FF1E104Z	CHIP C	0.1UF	Z		
C125-128			CK73FB1E223K	CHIP C	0.022UF	K		
C129			CE04EW1C470M	ELECTRO	47UF	16WV		
C130,131			CK73FB1E223K	CHIP C	0.022UF	K		
C132-134			CC73FSL1H101J	CHIP C	100PF	J		
C135,136			CK73FB1H102K	CHIP C	1000PF	K		
C137			CK73FB1E223K	CHIP C	0.022UF	K		
C138			CK73FF1E104Z	CHIP C	0.1UF	Z		
C139			CE04EW1E101M	ELECTRO	100UF	25WV		
C140			CK73EB1E683K	CHIP C	0.068UF	K		
C141			CK73FB1H153K	CHIP C	0.015UF	K		
C142			CE04EW1C470M	ELECTRO	47UF	16WV		
C143			CQ92M1H104K	MYLAR	0.10UF	K		
C144			CK73FB1H562K	CHIP C	5600PF	K		
C145			CE04EW1C470M	ELECTRO	47UF	16WV		
C146			CK73FB1H102K	CHIP C	1000PF	K		
C147			CC73FCH1H680J	CHIP C	68PF	J		
C148			CC73FCH1H180J	CHIP C	18PF	J		
C149			CC73FCH1H060D	CHIP C	6PF	D		
C150			CC73FSL1H470J	CHIP C	47PF	J		
C151			CC73FCH1H030C	CHIP C	3PF	C		
C152,153			CK73FB1H102K	CHIP C	1000PF	K		
C154			CK73FB1H153K	CHIP C	0.015UF	K		
C155			CE04EW1E101M	ELECTRO	100UF	25WV		
C156			CK73FB1H153K	CHIP C	0.015UF	K		
C157			CE04EW1C470M	ELECTRO	47UF	16WV		
C158			CK73FB1H153K	CHIP C	0.015UF	K		
C170-175			CC73FSL1H101J	CHIP C	100PF	J		
C176			CC73FSL1H101J	CHIP C	100PF	J		
C177			CK73FB1H102K	CHIP C	1000PF	K		
C178			CC73FSL1H221J	CHIP C	220PF	J		
			E31-6066-05	FLAT CABLE				
		*	E33-1958-15	FINISHED WIRE SET				
CN1			E40-5066-05	PIN CONNECTOR(9P)				
CN2			E40-3243-05	PIN CONNECTOR(8P)				
CN3 ,4			E40-5135-05	FLAT CABLE CONNECTOR				
CN5			E40-5066-05	PIN CONNECTOR(9P)				
CN6			E40-3243-05	PIN CONNECTOR(8P)				
CN7			E40-3237-05	PIN CONNECTOR(2P)				
CN8			E02-2018-05	IC SOCKET(40P)				
TP1 -3			E23-0464-05	TERMINAL				
TP5			E23-0464-05	TERMINAL				
W1			E31-6078-05	CONNECTING WIRE				

L:Scandinavia K:USA P:Canada
Y:PX(Far East, Hawaii) T:England E:Europe
Y:AAFES(Europe) X:Australia M:Other Areas

⚠ indicates safety critical components.

PARTS LIST

* New Parts
Parts without Parts No. are not supplied.
Les articles non mentionnes dans le Parts No. ne sont pas fournis.
Teile ohne Parts No. werden nicht geliefert.

DSP UNIT (X53-3390-00)

Ref. No. 参照番号	Address 位置	New Parts 新	Parts No. 部品番号	Description 部品名／規格	Destination 仕向	Remarks 備考
			F01-0972-22	HEAT SINK		
			F10-2029-03	SHIELDING PLATE		
			G02-0574-04	FLAT SPRING		
			J21-4280-04	HARDWARE FIXTURE		
CF1			L72-0375-05	CERAMIC FILTER		
L1			L40-1035-29	SMALL FIXED INDUCTOR(10MH)		
L2			L40-1225-29	SMALL FIXED INDUCTOR(1200UH)		
L3			L40-1001-15	SMALL FIXED INDUCTOR(10UH)		
L4			L40-1011-15	SMALL FIXED INDUCTOR(100UH)		
L5			L32-0198-05	OSC COIL		
L6			L40-1011-15	SMALL FIXED INDUCTOR(100UH)		
X1			L77-1408-05	CRYSTAL RESONATOR(25MHZ)		
			N30-2606-46	PAN HEAD MACHIN SCREW		
			N87-2606-46	BRAZIER HEAD TAPTITE SCREW		
R1			RK73FB2A100J	CHIP R 10 J 1/10W		
R2			RK73FB2A470J	CHIP R 47 J 1/10W		
R3 -6			RK73FB2A100J	CHIP R 10 J 1/10W		
R7			RK73FB2A102J	CHIP R 1.0K J 1/10W		
R8 ,9			RK73FB2A103J	CHIP R 10K J 1/10W		
R10			RK73FB2A102J	CHIP R 1.0K J 1/10W		
R11			RK73FB2A562J	CHIP R 5.6K J 1/10W		
R12			RK73FB2A123J	CHIP R 12K J 1/10W		
R13			RK73FB2A393J	CHIP R 39K J 1/10W		
R14			RK73FB2A562J	CHIP R 5.6K J 1/10W		
R15			RK73FB2A182J	CHIP R 1.8K J 1/10W		
R16 ,17			RK73FB2A273J	CHIP R 27K J 1/10W		
R18			RK73FB2A822J	CHIP R 8.2K J 1/10W		
R19			RK73FB2A682J	CHIP R 6.8K J 1/10W		
R20			RK73FB2A473J	CHIP R 47K J 1/10W		
R21			RK73FB2A222J	CHIP R 2.2K J 1/10W		
R22			RK73FB2A472J	CHIP R 4.7K J 1/10W		
R23			RK73FB2A153J	CHIP R 15K J 1/10W		
R24			RK73FB2A562J	CHIP R 5.6K J 1/10W		
R25			RK73FB2A682J	CHIP R 6.8K J 1/10W		
R26			RK73FB2A333J	CHIP R 33K J 1/10W		
R27			RK73FB2A223J	CHIP R 22K J 1/10W		
R28			RK73FB2A153J	CHIP R 15K J 1/10W		
R29			RK73FB2A104J	CHIP R 100K J 1/10W		
R30			RK73FB2A681J	CHIP R 680 J 1/10W		
R31 ,32			RK73FB2A103J	CHIP R 10K J 1/10W		
R33			RK73FB2A331J	CHIP R 330 J 1/10W		
R34			RK73FB2A472J	CHIP R 4.7K J 1/10W		
R35 ,36			RK73FB2A102J	CHIP R 1.0K J 1/10W		
R37			RK73FB2A183J	CHIP R 18K J 1/10W		
R38			RK73FB2A822J	CHIP R 8.2K J 1/10W		
R39			RK73FB2A183J	CHIP R 18K J 1/10W		
R40			RK73FB2A822J	CHIP R 8.2K J 1/10W		
R41			RK73FB2A103J	CHIP R 10K J 1/10W		
R42			RK73FB2A123J	CHIP R 12K J 1/10W		
R43			RK73FB2A105J	CHIP R 1.0M J 1/10W		
R44 ,45			RK73FB2A181J	CHIP R 180 J 1/10W		
R46			RK73FB2A103J	CHIP R 10K J 1/10W		

L:Scandinavia K:USA P:Canada
Y:PX(Far East, Hawaii) T:England E:Europe
Y:AAFES(Europe) X:Australia M:Other Areas

⚠ indicates safety critical components.

PARTS LIST

× New Parts
Parts without Parts No. are not supplied.
Les articles non mentionnes dans le Parts No. ne sont pas fournis.
Teile ohne Parts No. werden nicht geliefert.

DSP UNIT (X53-3390-00)

Ref. No. 参照番号	Address 位置	New Parts 新	Parts No. 部品番号	Description 部品名／規格	Destination 仕向	Remarks 備考
R47 ,48			RK73FB2A332J	CHIP R 3.3K J 1/10W		
R49 -51			RK73FB2A103J	CHIP R 10K J 1/10W		
R52			RK73FB2A152J	CHIP R 1.5K J 1/10W		
R53 -58			RK73FB2A103J	CHIP R 10K J 1/10W		
R59 -62			RK73FB2A102J	CHIP R 1.0K J 1/10W		
R63			RK73FB2A470J	CHIP R 47 J 1/10W		
R64			RK73FB2A222J	CHIP R 2.2K J 1/10W		
R65 ,66			RK73FB2A102J	CHIP R 1.0K J 1/10W		
R67			RK73FB2A101J	CHIP R 100 J 1/10W		
R68			RK73FB2A470J	CHIP R 47 J 1/10W		
R69			RK73FB2A222J	CHIP R 2.2K J 1/10W		
R70			RK73FB2A122J	CHIP R 1.2K J 1/10W		
R71			RK73FB2A182J	CHIP R 1.8K J 1/10W		
R72			RK73FB2A224J	CHIP R 220K J 1/10W		
R73			RK73FB2A103J	CHIP R 10K J 1/10W		
R74			RK73FB2A332J	CHIP R 3.3K J 1/10W		
R75			RK73FB2A221J	CHIP R 220 J 1/10W		
R76			RK73FB2A272J	CHIP R 2.7K J 1/10W		
R78			RK73FB2A682J	CHIP R 6.8K J 1/10W		
R79			RK73FB2A102J	CHIP R 1.0K J 1/10W		
R80 ,81			RK73FB2A222J	CHIP R 2.2K J 1/10W		
R82			RK73FB2A102J	CHIP R 1.0K J 1/10W		
R83			RK73FB2A332J	CHIP R 3.3K J 1/10W		
R84			RK73FB2A102J	CHIP R 1.0K J 1/10W		
R85			RK73FB2A332J	CHIP R 3.3K J 1/10W		
R86			RK73FB2A122J	CHIP R 1.2K J 1/10W		
R87 ,88			RK73FB2A102J	CHIP R 1.0K J 1/10W		
R89 -92			RK73FB2A101J	CHIP R 100 J 1/10W		
R100,101			RK73FB2A100J	CHIP R 10 J 1/10W		
R102			RK73FB2A221J	CHIP R 220 J 1/10W		
R103-106			RK73FB2A101J	CHIP R 100 J 1/10W		
R107			RK73FB2A182J	CHIP R 1.8K J 1/10W		
R108-110			RK73FB2A103J	CHIP R 10K J 1/10W		
R111			RK73FB2A221J	CHIP R 220 J 1/10W		
R112			RK73FB2A182J	CHIP R 1.8K J 1/10W		
R113			RK73FB2A154J	CHIP R 150K J 1/10W		
R114			RK73FB2A470J	CHIP R 47 J 1/10W		
R115			RK73FB2A123J	CHIP R 12K J 1/10W		
R116			RK73FB2A153J	CHIP R 15K J 1/10W		
R117			RK73FB2A101J	CHIP R 100 J 1/10W		
R118			RK73FB2A182J	CHIP R 1.8K J 1/10W		
R119			RK73FB2A184J	CHIP R 180K J 1/10W		
R120			RK73FB2A271J	CHIP R 270 J 1/10W		
R121			RK73FB2A221J	CHIP R 220 J 1/10W		
R122			RK73FB2A332J	CHIP R 3.3K J 1/10W		
R123			RK73FB2A104J	CHIP R 100K J 1/10W		
R124			RK73FB2A562J	CHIP R 5.6K J 1/10W		
R125			RK73FB2A152J	CHIP R 1.5K J 1/10W		
R127			RK73FB2A103J	CHIP R 10K J 1/10W		
R128			RK73FB2A470J	CHIP R 47 J 1/10W		
R129			RK73FB2A334J	CHIP R 330K J 1/10W		
R130			RK73FB2A151J	CHIP R 150 J 1/10W		
R131			RK73FB2A470J	CHIP R 47 J 1/10W		
R132			RK73FB2A223J	CHIP R 22K J 1/10W		
R133			RK73FB2A273J	CHIP R 27K J 1/10W		

L:Scandinavia K:USA P:Canada
Y:PX(Far East, Hawaii) T:England E:Europe
Y:AAFES(Europe) X:Australia M:Other Areas

⚠ indicates safety critical components.

PARTS LIST

× New Parts
Parts without Parts No. are not suppiled.
Les articles non mentionnes dans le Parts No. ne sont pas fournis.
Teile ohne Parts No. werden nicht geliefert.

DSP UNIT (X53-3390-00)
DISPLAY UNIT (X54-3080-01)

Ref. No. 参照番号	Address 位置	New Parts 新	Parts No. 部品番号	Description 部品名／規格	Destination 仕向	Remarks 備考
R134			RK73FB2A470J	CHIP R 47 J 1/10W		
R135			RK73FB2A102J	CHIP R 1.0K J 1/10W		
R136			RK73FB2A470J	CHIP R 47 J 1/10W		
R137			RK73FB2A221J	CHIP R 220 J 1/10W		
R138			RK73FB2A472J	CHIP R 4.7K J 1/10W		
D1			RD4.3M(B2)	CHIP DIODE		
D2			1SS226	DIODE		
D3			1SS272	DIODE		
D4			1SV166	DIODE		
IC1			UPC78M05HF	IC(VOLTAGE REGULATOR/+5V)		
IC2			UPC79M05HF	IC(VOLTAGE REGULATOR/+5V)		
IC3 ,4			MC74HC4052F	IC(HPF)		
IC5			NJM4560M	IC(OP AMP X2)		
IC6			NJM5532M	IC(OP AMP)		
IC7			MC74HC4053F	IC(ANALOG SW)		
IC8			KCE05	IC		
IC9			NJM4560M	IC(OP AMP X2)		
IC10,11			NJM072BM	IC(SAMPLE/HOLD AMP)		
IC12			PCM78AP	IC(D/A CONVERTER)		
IC13			TC74HC74AF	IC(DUAL D-TYPE FLIP FLOP)		
IC15			TC74HC74AF	IC(DUAL D-TYPE FLIP FLOP)		
IC16			PCM56P	IC(D/A CONVERTER)		
IC17			MC74HC4053F	IC(ANALOG SW)		
IC18			LM6361M	IC(BUFF)		
IC19			KCE05	IC		
IC20			MC74HC4053F	IC(ANALOG SW)		
IC21		*	TMS320E15J-JCX2	IC(DIGITAL SIGNAL PROCESSOR)		
IC22			UPD65012GF-350	IC(GATE ARRAY)		
IC24			S-8054ALR-LN	IC		
IC25			NJM78L08UA	IC(VOLTAGE REGULATOR/ +8V)		
IC26			CXD1225M	IC(PLL SYNTHSIZER)		
Q1			2SK508NV(K53)	FET		
Q2 ,3			2SC2412K(S)	TRANSISTOR		
Q5			2SC2412K(S)	TRANSISTOR		
Q6 ,7			DTC144EK	DIGITAL TRANSISTOR		
Q8 ,9			2SC2714(Y)	TRANSISTOR		
Q10 -12			2SC3324(G)	TRANSISTOR		
Q13			2SK210(GR)	FET		
Q14 ,15			2SC2714(Y)	TRANSISTOR		
DISPLAY UNIT (X54-3080-01)						
C1			CE04EW1E470M	ELECTRO 47UF 25WV		
C2 ,3			CE04EW1H470M	ELECTRO 47UF 50WV		
C4 ,5			CE04EW1A471M	ELECTRO 470UF 10WV		
C6			CK73FB1E103K	CHIP C 0.01UF K		
C7 ,8			CK73FB1H103K	CHIP C 0.010UF K		
C9			CK73FB1E103K	CHIP C 0.01UF K		
C10 ,11			CK73FB1H471K	CHIP C 470PF K		
C12			CK73FB1E103K	CHIP C 0.01UF K		
C13 -17			CK73FB1H471K	CHIP C 470PF K		
C18 -32			CK73FB1E103K	CHIP C 0.01UF K		
C38			CK73FF1E104Z	CHIP C 0.1UF Z		
C39 ,40			CC73FCH1H100D	CHIP C 10PF D		
C42 -43			CK73FB1E103K	CHIP C 0.01UF K		
C44			CK73FB1H102K	CHIP C 1000PF K		

L:Scandinavia K:USA P:Canada
Y:PX(Far East, Hawaii) T:England E:Europe
Y:AAFES(Europe) X:Australia M:Other Areas

⚠ indicates safety critical components.

PARTS LIST

⁎ New Parts
Parts without Parts No. are not supplied.
Les articles non mentionnes dans le Parts No. ne sont pas fournis.
Teile ohne Parts No. werden nicht geliefert.

DISPLAY UNIT (X54-3080-01)

Ref. No. 参照番号	Address 位置	New Parts 新	Parts No. 部品番号	Description 部品名／規格	Destination 仕向	Remarks 備考
C48			CK73FF1E104Z	CHIP C 0.1UF Z		
C50			CK73FF1E104Z	CHIP C 0.1UF Z		
C52			CK73FF1E104Z	CHIP C 0.1UF Z		
C54			CK73FF1E104Z	CHIP C 0.1UF Z		
C57			CK73FF1E104Z	CHIP C 0.1UF Z		
C59			CK73FB1H332K	CHIP C 3300PF K		
C60			CK73FB1H472K	CHIP C 4700PF K		
C61			C91-0433-05	MYLAR 3900PF J		
C62 ,63			CK73FB1H472K	CHIP C 4700PF K		
C66			CE04EW1A471M	ELECTRO 470UF 10WV		
CN1			E40-5133-05	PIN CONNECTOR(18P)		
CN2 -4			E40-3237-05	PIN CONNECTOR(2P)		
CN5			E40-5034-05	PIN CONNECTOR(10P)		
CN6			E40-3243-05	PIN CONNECTOR(8P)		
V1			FIP25AMW20	FLOURESCENT INDICATOR TUBE		
			J19-1435-03	HOLDER		
L1			L40-1011-13	SMALL FIXED INDUCTOR(100UH)		
L3			L40-1011-13	SMALL FIXED INDUCTOR(100UH)		
X1			L77-1380-05	CRYSTAL RESONATOR(11.0592MHZ)		
CP1			R90-0598-05	MULTI-COMP 10K/20K		
R1 ,2			RD14BB2C2R2J	RD 2.2 J 1/6W		
R3			RK73FB2A101J	CHIP R 100 J 1/10W		
R4 -13			RK73FB2A103J	CHIP R 10K J 1/10W		
R14			RK73FB2A104J	CHIP R 100K J 1/10W		
R15			RK73FB2A472J	CHIP R 4.7K J 1/10W		
R16 -19			RK73FB2A103J	CHIP R 10K J 1/10W		
R20			RK73FB2A223J	CHIP R 22K J 1/10W		
R21 -26			RK73FB2A221J	CHIP R 220 J 1/10W		
R27 -40			RK73FB2A102J	CHIP R 1.0K J 1/10W		
R45			RK73FB2A223J	CHIP R 22K J 1/10W		
R46 -48			RK73FB2A103J	CHIP R 10K J 1/10W		
R50 -69			RK73FB2A473J	CHIP R 47K J 1/10W		
R70 -89			RK73FB2A473J	CHIP R 47K J 1/10W		
R90 -109			RK73FB2A473J	CHIP R 47K J 1/10W		
R110-129			RK73FB2A473J	CHIP R 47K J 1/10W		
R130-149			RK73FB2A473J	CHIP R 47K J 1/10W		
R150-169			RK73FB2A473J	CHIP R 47K J 1/10W		
R170-176			RK73FB2A473J	CHIP R 47K J 1/10W		
R180-198			RK73FB2A472J	CHIP R 4.7K J 1/10W		
R199-218			RK73FB2A472J	CHIP R 4.7K J 1/10W		
R219-238			RK73FB2A472J	CHIP R 4.7K J 1/10W		
R239-258			RK73FB2A472J	CHIP R 4.7K J 1/10W		
R259-278			RK73FB2A472J	CHIP R 4.7K J 1/10W		
R279-298			RK73FB2A472J	CHIP R 4.7K J 1/10W		
R299-306			RK73FB2A472J	CHIP R 4.7K J 1/10W		
R310-329			RK73FB2A222J	CHIP R 2.2K J 1/10W		
R330-349			RK73FB2A222J	CHIP R 2.2K J 1/10W		
R350-369			RK73FB2A222J	CHIP R 2.2K J 1/10W		
R370-389			RK73FB2A222J	CHIP R 2.2K J 1/10W		
R390-409			RK73FB2A222J	CHIP R 2.2K J 1/10W		
R410-429			RK73FB2A222J	CHIP R 2.2K J 1/10W		
R430-446			RK73FB2A222J	CHIP R 2.2K J 1/10W		
R450			RK73FB2A105J	CHIP R 1.0M J 1/10W		

L:Scandinavia K:USA P:Canada
Y:PX(Far East, Hawaii) T:England E:Europe
Y:AAFES(Europe) X:Australia M:Other Areas

⚠ indicates safety critical components.

PARTS LIST

* New Parts
Parts without Parts No. are not supplied.
Les articles non mentionnes dans le Parts No. ne sont pas fournis.
Teile ohne Parts No. werden nicht geliefert.

DISPLAY UNIT (X54-3080-01)
SIGNAL UNIT (X57-4130-00)

Ref. No. 参照番号	Address 位置	New Parts 新	Parts No. 部品番号	Description 部品名／規格	Destination 仕向	Remarks 備考
R451			RK73FB2A104J	CHIP R 100K J 1/10W		
R452			RK73FB2A223J	CHIP R 22K J 1/10W		
R453			RK73FB2A103J	CHIP R 10K J 1/10W		
R454			RK73FB2A101J	CHIP R 100 J 1/10W		
R455			RK73FB2A105J	CHIP R 1.0M J 1/10W		
R456			RK73FB2A563J	CHIP R 56K J 1/10W		
R457			RK73FB2A100J	CHIP R 10 J 1/10W		
R458,459			RK73FB2A183J	CHIP R 18K J 1/10W		
R460			RK73FB2A103J	CHIP R 10K J 1/10W		
VR1			R12-3128-05	TRIMM POT. 22K		
W1 -3			R92-0150-05	JUMPER REST 0 OHM		
W4 ,5			R92-0679-05	CHIP R 0 OHM		
W6 -9			R92-0670-05	CHIP R 0 OHM		
74H16			TC74HC574AF	IC(LATCH)		
74H35			TC74HC574AF	IC(LATCH)		
A113-20			2SA1455K(S)	TRANSISTOR		
A119=			2SA1455K(S)	TRANSISTOR		
A1163			2SA1455K(S)	TRANSISTOR		
D1			RLZJ11B	CHIP ZENER DIODE(11V)		
IC1		*	643180XA34F6	IC(SUB CPU)		
IC2 ,3			MB622180PF	IC(GATE ARRAY)		
IC4			TC74HC138AF	IC(DECODER)		
IC5 ,6			TC74HC574AF	IC(LATCH)		
IC7			TC74HC04AF	IC(INVERTER)		
IC8			TC74HC00AF	IC		
IC9			TC74HC175AF	IC(LATCH)		
IC10			TC4011BF	IC(NAND X4)		
Q1 -20			2SA1455K(S)	TRANSISTOR		
Q21		*	2SA1201(O,Y)	TRANSISTOR		
Q26		*	2SA1201(O,Y)	TRANSISTOR		
Q43 -62			2SA1455K(S)	TRANSISTOR		
Q63 -76			2SA1455K(S)	TRANSISTOR		
Q77 -84			FMG1	TRANSISTOR		
Q85 -90			2SA1455K(S)	TRANSISTOR		
Q91 -93			2SA1455K(S)	TRANSISTOR		
Q94			FMG1	TRANSISTOR		
Q95 -103			2SA1455K(S)	TRANSISTOR		
Q104			FMG1	TRANSISTOR		
Q105-112			2SA1455K(S)	TRANSISTOR		
Q113-116			2SA1455K(S)	TRANSISTOR		
Q117			2SA1201(O,Y)	TRANSISTOR		
Q118-133			2SA1455K(S)	TRANSISTOR		
Q134-137			2SA1455K(S)	TRANSISTOR		
SIGNAL UNIT (X57-4130-00)						
C1 -4			CK73FF1E104Z	CHIP C 0.1UF Z		
C5			CK73FB1E223K	CHIP C 0.022UF K		
C6 -21			CK73FF1E104Z	CHIP C 0.1UF Z		
C22 -29			CK73FF1E104Z	CHIP C 0.1UF Z		
C30			CK73EF1E474Z	CHIP C 0.47UF Z		
C31 ,32			CK73FF1E104Z	CHIP C 0.1UF Z		
C33 ,34			C91-1078-05	MYLAR 1800PF J		
C35			CK73FB1E103K	CHIP C 0.01UF K		
C36			CK73FF1E104Z	CHIP C 0.1UF Z		
C37			CC73FSL1H151J	CHIP C 150PF J		

L:Scandinavia K:USA P:Canada
Y:PX(Far East, Hawaii) T:England E:Europe
Y:AAFES(Europe) X:Australia M:Other Areas

⚠ indicates safety critical components.

PARTS LIST

× New Parts
Parts without Parts No. are not supplied.
Les articles non mentionnes dans le Parts No. ne sont pas fournis.
Teile ohne Parts No. werden nicht geliefert.

SIGNAL UNIT (X57-4130-00)

Ref. No. 参照番号	Address 位置	New Parts 新	Parts No. 部品番号	Description 部品名／規格			Destination 仕向	Remarks 備考
C38			CK73EF1E224Z	CHIP C	0.22UF	Z		
C39			CK73FF1E104Z	CHIP C	0.1UF	Z		
C40			CK73EF1E474Z	CHIP C	0.47UF	Z		
C41 ,42			CK73FF1E104Z	CHIP C	0.1UF	Z		
C43 ,44			CC73FSL1H221J	CHIP C	220PF	J		
C45			CK73FB1E223K	CHIP C	0.022UF	K		
C46			CK73FB1E103K	CHIP C	0.01UF	K		
C47			CK73EF1E474Z	CHIP C	0.47UF	Z		
C48			CE04EW1C101M	ELECTRO	100UF	16WV		
C49			CK73EF1C105Z	CHIP C	1.0UF	Z		
C50 -52			CK73FB1H102K	CHIP C	1000PF	K		
C53 ,54			CK73FF1E104Z	CHIP C	0.1UF	Z		
C55 ,56			CK73FB1E103K	CHIP C	0.01UF	K		
C57 -59			CK73FF1E104Z	CHIP C	0.1UF	Z		
C60			CK73EF1E474Z	CHIP C	0.47UF	Z		
C61			CK73FB1E103K	CHIP C	0.01UF	K		
C62			CC73FSL1H470J	CHIP C	47PF	J		
C63			CC73FSL1H221J	CHIP C	220PF	J		
C64			CK73FB1H102K	CHIP C	1000PF	K		
C65			CK73FB1E103K	CHIP C	0.01UF	K		
C66			CE04EW1H3R3M	ELECTRO	3.3UF	50WV		
C67			CK73FB1E223K	CHIP C	0.022UF	K		
C68			CE04EW1H010M	ELECTRO	1.0UF	50WV		
C69			CE04EW1C100M	ELECTRO	10UF	16WV		
C71			CE04EW1H2R2M	ELECTRO	2.2UF	50WV		
C72 ,73			CK73FB1E103K	CHIP C	0.01UF	K		
C74			CE04EW1C100M	ELECTRO	10UF	16WV		
C76			CE04EW1C100M	ELECTRO	10UF	16WV		
C77			CC73FSL1H101J	CHIP C	100PF	J		
C78			CK73FB1E223K	CHIP C	0.022UF	K		
C79			CE04EW1HR47M	ELECTRO	0.47UF	50WV		
C80 ,81			CK73FB1E223K	CHIP C	0.022UF	K		
C82			CK73FF1E104Z	CHIP C	0.1UF	Z		
C98			CK73FB1E153K	CHIP C	0.015UF	K		
C99			CK73FB1H182K	CHIP C	1800PF	K		
C100			CC73FCH1H330J	CHIP C	33PF	J		
C101			CK73FB1H222K	CHIP C	2200PF	K		
C102			CC73FSL1H470J	CHIP C	47PF	J		
C103			CK73FB1H561K	CHIP C	560PF	K		
C104,105			CE04EW1C100M	ELECTRO	10UF	16WV		
C106			CK73FF1E104Z	CHIP C	0.1UF	Z		
C107			CK73FB1H102K	CHIP C	1000PF	K		
C108			CE04EW1C330M	ELECTRO	33UF	16WV		
C109			CE04EW1H2R2M	ELECTRO	2.2UF	50WV		
C121			CK73FB1E103K	CHIP C	0.01UF	K		
C122-124			CK73FF1E104Z	CHIP C	0.1UF	Z		
C125			CE04EW1C100M	ELECTRO	10UF	16WV		
C126			CE04EW1E4R7M	ELECTRO	4.7UF	25WV		
C127			CK73FB1H102K	CHIP C	1000PF	K		
C128			CE04EW1H2R2M	ELECTRO	2.2UF	50WV		
C129			CK73FB1H103K	CHIP C	0.010UF	K		
C130-137			CK73FF1E104Z	CHIP C	0.1UF	Z		
C138			CC73FCH1H330J	CHIP C	33PF	J		
C139			CK73FB1H472K	CHIP C	4700PF	K		
C140			CK73FB1H152K	CHIP C	1500PF	K		

L:Scandinavia K:USA P:Canada
Y:PX(Far East, Hawaii) T:England E:Europe
Y:AAFES(Europe) X:Australia M:Other Areas

⚠ indicates safety critical components.

PARTS LIST

× New Parts
Parts without Parts No. are not supplied.
Les articles non mentionnes dans le Parts No. ne sont pas fournis.
Teile ohne Parts No. werden nicht geliefert.

SIGNAL UNIT (X57-4130-00)

Ref. No. 参照番号	Address 位置	New Parts 新	Parts No. 部品番号	Description 部品名／規格	Destination 仕向	Remarks 備考
C141			CE04EW1C100M	ELECTRO 10UF 16WV		
C142,143			CK73FF1E104Z	CHIP C 0.1UF Z		
C144			CC73FSL1H101J	CHIP C 100PF J		
C145			CE04EW1C100M	ELECTRO 10UF 16WV		
C146			CE04EW1H010M	ELECTRO 1.0UF 50WV		
C147			CE04EW1E4R7M	ELECTRO 4.7UF 25WV		
C148			CE04EW1C100M	ELECTRO 10UF 16WV		
C149			CC73FSL1H561J	CHIP C 650PF J		
C152			CE04EW1H010M	ELECTRO 1.0UF 50WV		
C161			CK73FF1E104Z	CHIP C 0.1UF Z		
C162			CC73FSL1H151J	CHIP C 150PF J		
C163			CK73FB1E103K	CHIP C 0.01UF K		
C168-171			CK73FF1E104Z	CHIP C 0.1UF Z		
C172-174			CK73FF1E104Z	CHIP C 0.1UF Z		
C175			CK73FB1E103K	CHIP C 0.01UF K		
C176			CK73FB1H182K	CHIP C 1800PF K		
C177			CK73FB1H102K	CHIP C 1000PF K		
C178-181			CK73FF1E104Z	CHIP C 0.1UF Z		
C182			CC73FSL1H331J	CHIP C 330PF J		
C183			CK73FF1E104Z	CHIP C 0.1UF Z		
C184			CK73FB1E103K	CHIP C 0.01UF K		
C185			CC73FSL1H151J	CHIP C 150PF J		
C186-191			CK73FF1E104Z	CHIP C 0.1UF Z		
C192			CC73FCH1H270J	CHIP C 27PF J		
C193			CC73FSL1H561J	CHIP C 650PF J		
C194-198			CK73FF1E104Z	CHIP C 0.1UF Z		
C199			CK73FB1H102K	CHIP C 1000PF K		
C201			CK73FB1H472K	CHIP C 4700PF K		
C203,204			CK73FF1E104Z	CHIP C 0.1UF Z		
C205			CE04EW1H010M	ELECTRO 1.0UF 50WV		
C206			CK73FB1H102K	CHIP C 1000PF K		
C208			CK73FB1H472K	CHIP C 4700PF K		
C209			CC73FSL1H121J	CHIP C 120PF J		
C210			CK73FF1E104Z	CHIP C 0.1UF Z		
C211			CE04EW1H2R2M	ELECTRO 2.2UF 50WV		
C212			CE04EW1C330M	ELECTRO 33UF 16WV		
C213			CE04EW1HR22M	ELECTRO 0.22UF 50WV		
C214			CE04EW1H010M	ELECTRO 1.0UF 50WV		
C215			CK73FF1E104Z	CHIP C 0.1UF Z		
C217			CK73FB1H102K	CHIP C 1000PF K		
C218			CE04EW1C100M	ELECTRO 10UF 16WV		
C219			CK73FB1H472K	CHIP C 4700PF K		
C220			CE04EW1C100M	ELECTRO 10UF 16WV		
C221			CK73FF1E104Z	CHIP C 0.1UF Z		
C223,224			CK73FF1E104Z	CHIP C 0.1UF Z		
C301			CK73FB1E103K	CHIP C 0.01UF K		
C302			CK73FF1E104Z	CHIP C 0.1UF Z		
C303			CK73FB1E103K	CHIP C 0.01UF K		
CN1 ,2			E40-5038-05	PIN CONNECTOR(14P)		
CN3			E40-3239-05	PIN CONNECTOR(4P)		
CN4 ,5			E40-3237-05	PIN CONNECTOR(2P)		
CN6			E40-3239-05	PIN CONNECTOR(4P)		
CN7			E40-3240-05	PIN CONNECTOR(5P)		

L:Scandinavia K:USA P:Canada
Y:PX(Far East, Hawaii) T:England E:Europe
Y:AAFES(Europe) X:Australia M:Other Areas

⚠ indicates safety critical components.

TS-950SDX

PARTS LIST

⁎ New Parts
Parts without Parts No. are not supplied.
Les articles non mentionnes dans le Parts No. ne sont pas fournis.
Teile ohne Parts No. werden nicht gellefert.

SIGNAL UNIT (X57-4130-00)

Ref. No. 参照番号	Address 位置	New Parts 新	Parts No. 部品番号	Description 部品名／規格	Destination 仕向	Remarks 備考
CN8			E40-3238-05	PIN CONNECTOR(3P)		
CN9			E40-5038-05	PIN CONNECTOR(14P)		
CN10			E40-5067-05	PIN CONNECTOR(10P)		
CN11			E40-3237-05	PIN CONNECTOR(2P)		
CN12			E40-3242-05	PIN CONNECTOR(7P)		
CN13			E40-3243-05	PIN CONNECTOR(8P)		
CN14			E40-5066-05	PIN CONNECTOR(9P)		
CN15			E40-3237-05	PIN CONNECTOR(2P)		
CN16			E40-3239-05	PIN CONNECTOR(4P)		
CN17			E40-3237-05	PIN CONNECTOR(2P)		
CN18			E40-3238-05	PIN CONNECTOR(3P)		
CN19-24			E40-0511-05	PIN CONNECTOR(5P)		
CN301			E40-3238-05	PIN CONNECTOR(3P)		
			J32-0761-04	STUD		
			LM2903M	IC(COMPALATOR)		
CF1			L72-0319-05	CERAMIC FILTER(AM)		
CF2			L72-0315-05	CERAMIC FILTER(12K)		
CF3			L72-0319-05	CERAMIC FILTER(AM)		
CF4			L79-0446-05	CERAMIC DISCRI		
CF5			L72-0319-05	CERAMIC FILTER(AM)		
L2			L34-2121-05	TUNING COIL		
L4			L34-2124-05	TUNING COIL		
L5			L32-0650-15	OSCILLATING COIL		
L6			L34-2127-15	TUNING COIL		
L7			L34-2128-15	TUNING COIL		
L8			L40-2211-14	SMALL FIXED INDUCTOR(220UH)		
L20			L40-3325-04	SMALL FIXED INDUCTOR(3.3UH)		
L22			L34-2124-05	TUNING COIL		
L24 ,25			L34-2124-05	TUNING COIL		
L26			L30-0199-05	IFT		
L27			L40-2215-33	SMALL FIXED INDUCTOR(220UH)		
L28			L30-0503-05	IFT		
L29			L40-1021-14	SMALL FIXED INDUCTOR(1MH)		
BF	3F		N30-3010-46	PAN HEAD MACHIN SCREW		
R1 ,2			RK73FB2A222J	CHIP R 2.2K J 1/10W		
R3			RK73FB2A153J	CHIP R 15K J 1/10W		
R4			RK73FB2A104J	CHIP R 100K J 1/10W		
R5			RK73FB2A471J	CHIP R 470 J 1/10W		
R6			RK73FB2A104J	CHIP R 100K J 1/10W		
R7			RK73FB2A221J	CHIP R 220 J 1/10W		
R8			RK73FB2A222J	CHIP R 2.2K J 1/10W		
R9			RK73FB2A272J	CHIP R 2.7K J 1/10W		
R10			RK73FB2A471J	CHIP R 470 J 1/10W		
R11			RK73FB2A221J	CHIP R 220 J 1/10W		
R12			RK73FB2A472J	CHIP R 4.7K J 1/10W		
R13			RK73FB2A272J	CHIP R 2.7K J 1/10W		
R14			RK73FB2A471J	CHIP R 470 J 1/10W		
R15			RK73FB2A221J	CHIP R 220 J 1/10W		
R16 ,17			RK73FB2A472J	CHIP R 4.7K J 1/10W		
R18			RK73FB2A471J	CHIP R 470 J 1/10W		
R19			RK73FB2A221J	CHIP R 220 J 1/10W		

L:Scandinavia K:USA P:Canada
Y:PX(Far East, Hawaii) T:England E:Europe
Y:AAFES(Europe) X:Australia M:Other Areas

⚠ indicates safety critical components.

PARTS LIST

* New Parts
Parts without Parts No. are not supplied.
Les articles non mentionnes dans le Parts No. ne sont pas fournis.
Teile ohne Parts No. werden nicht geliefert.

SIGNAL UNIT (X57-4130-00)

Ref. No. 参照番号	Address 位置	New Parts 新	Parts No. 部品番号	Description 部品名／規格	Destination 仕向	Remarks 備考
R20			RK73FB2A472J	CHIP R 4.7K J 1/10W		
R21			RK73FB2A272J	CHIP R 2.7K J 1/10W		
R22			RK73FB2A472J	CHIP R 4.7K J 1/10W		
R23			RK73FB2A471J	CHIP R 470 J 1/10W		
R24			RK73FB2A221J	CHIP R 220 J 1/10W		
R25			RK73FB2A472J	CHIP R 4.7K J 1/10W		
R26			RK73FB2A153J	CHIP R 15K J 1/10W		
R27			RK73FB2A104J	CHIP R 100K J 1/10W		
R28			RK73FB2A471J	CHIP R 470 J 1/10W		
R29			RK73FB2A221J	CHIP R 220 J 1/10W		
R30			RK73FB2A103J	CHIP R 10K J 1/10W		
R31			RK73FB2A332J	CHIP R 3.3K J 1/10W		
R32			RK73FB2A182J	CHIP R 1.8K J 1/10W		
R33			RK73FB2A471J	CHIP R 470 J 1/10W		
R34			RK73FB2A123J	CHIP R 12K J 1/10W		
R35			RK73FB2A104J	CHIP R 100K J 1/10W		
R36			RK73FB2A561J	CHIP R 560 J 1/10W		
R37			RK73FB2A221J	CHIP R 220 J 1/10W		
R38			RK73FB2A103J	CHIP R 10K J 1/10W		
R39			RK73FB2A183J	CHIP R 18K J 1/10W		
R40 ,41			RK73FB2A104J	CHIP R 100K J 1/10W		
R42			RK73FB2A681J	CHIP R 680 J 1/10W		
R43			RK73FB2A104J	CHIP R 100K J 1/10W		
R44			RK73FB2A473J	CHIP R 47K J 1/10W		
R45			RK73FB2A273J	CHIP R 27K J 1/10W		
R46			RK73FB2A103J	CHIP R 10K J 1/10W		
R47			RK73FB2A473J	CHIP R 47K J 1/10W		
R48 ,49			RK73FB2A103J	CHIP R 10K J 1/10W		
R50			RK73FB2A563J	CHIP R 56K J 1/10W		
R51			RK73FB2A105J	CHIP R 1.0M J 1/10W		
R52			RK73FB2A181J	CHIP R 180 J 1/10W		
R53			RK73FB2A102J	CHIP R 1.0K J 1/10W		
R54			RK73FB2A102J	CHIP R 1.0K J 1/10W		
R55 ,56			RK73FB2A471J	CHIP R 470 J 1/10W		
R58 ,59			RK73FB2A223J	CHIP R 22K J 1/10W		
R60 ,61			RK73FB2A332J	CHIP R 3.3K J 1/10W		
R62 ,63			RK73FB2A223J	CHIP R 22K J 1/10W		
R64			RK73FB2A222J	CHIP R 2.2K J 1/10W		
R65			RK73FB2A221J	CHIP R 220 J 1/10W		
R66 -71			RK73FB2A104J	CHIP R 100K J 1/10W		
R72			RK73FB2A222J	CHIP R 2.2K J 1/10W		
R73 -76			RK73FB2A104J	CHIP R 100K J 1/10W		
R77			RK73FB2A223J	CHIP R 22K J 1/10W		
R78			RK73FB2A221J	CHIP R 220 J 1/10W		
R79			RK73FB2A101J	CHIP R 100 J 1/10W		
R80 ,81			RK73FB2A223J	CHIP R 22K J 1/10W		
R82			RK73FB2A222J	CHIP R 2.2K J 1/10W		
R83			RK73FB2A821J	CHIP R 820 J 1/10W		
R84			RK73FB2A152J	CHIP R 1.5K J 1/10W		
R86 ,87			RK73FB2A223J	CHIP R 22K J 1/10W		
R88			RK73FB2A221J	CHIP R 220 J 1/10W		
R89			RK73FB2A222J	CHIP R 2.2K J 1/10W		
R90			RK73FB2A334J	CHIP R 330K J 1/10W		
R91			RK73FB2A221J	CHIP R 220 J 1/10W		
R93			RK73FB2A222J	CHIP R 2.2K J 1/10W		

L:Scandinavia K:USA P:Canada
Y:PX(Far East, Hawaii) T:England E:Europe
Y:AAFES(Europe) X:Australia M:Other Areas

⚠ indicates safety critical components.

TS-950SDX

PARTS LIST

× New Parts
Parts without Parts No. are not supplied.
Les articles non mentionnes dans le Parts No. ne sont pas fournis.
Teile ohne Parts No. werden nicht geliefert.

SIGNAL UNIT (X57-4130-00)

Ref. No. 参照番号	Address 位置	New Parts 新	Parts No. 部品番号	Description 部品名／規格	Destination 仕向	Remarks 備考
R94			RK73FB2A102J	CHIP R 1.0K J 1/10W		
R95			RK73FB2A274J	CHIP R 270K J 1/10W		
R96			RK73FB2A473J	CHIP R 47K J 1/10W		
R97			RK73FB2A273J	CHIP R 27K J 1/10W		
R98			RK73FB2A105J	CHIP R 1.0M J 1/10W		
R99 ,100			RK73FB2A102J	CHIP R 1.0K J 1/10W		
R101			RK73FB2A474J	CHIP R 470K J 1/10W		
R102			RK73FB2A103J	CHIP R 10K J 1/10W		
R103-104			RK73FB2A104J	CHIP R 100K J 1/10W		
R105			RK73FB2A103J	CHIP R 10K J 1/10W		
R106			RK73FB2A104J	CHIP R 100K J 1/10W		
R107,108			RK73FB2A102J	CHIP R 1.0K J 1/10W		
R109			RK73FB2A272J	CHIP R 2.7K J 1/10W		
R110			RK73FB2A152J	CHIP R 1.5K J 1/10W		
R111			RK73FB2A103J	CHIP R 10K J 1/10W		
R112			RK73FB2A682J	CHIP R 6.8K J 1/10W		
R113			RK73FB2A333J	CHIP R 33K J 1/10W		
R114			RK73FB2A153J	CHIP R 15K J 1/10W		
R115			RK73FB2A102J	CHIP R 1.0K J 1/10W		
R116			RK73FB2A221J	CHIP R 220 J 1/10W		
R117			RK73FB2A103J	CHIP R 10K J 1/10W		
R118			RK73FB2A473J	CHIP R 47K J 1/10W		
R119			RK73FB2A103J	CHIP R 10K J 1/10W		
R120			RK73FB2A471J	CHIP R 470 J 1/10W		
R142			RK73FB2A684J	CHIP R 680K J 1/10W		
R143			RK73FB2A332J	CHIP R 3.3K J 1/10W		
R144			RK73FB2A474J	CHIP R 470K J 1/10W		
R145			RK73FB2A222J	CHIP R 2.2K J 1/10W		
R146			RK73FB2A102J	CHIP R 1.0K J 1/10W		
R147			RK73FB2A393J	CHIP R 39K J 1/10W		
R148			RK73FB2A682J	CHIP R 6.8K J 1/10W		
R149-151			RK73FB2A103J	CHIP R 10K J 1/10W		
R152			RK73FB2A682J	CHIP R 6.8K J 1/10W		
R153			RK73FB2A102J	CHIP R 1.0K J 1/10W		
R171			RK73FB2A822J	CHIP R 8.2K J 1/10W		
R172			RK73FB2A473J	CHIP R 47K J 1/10W		
R173,174			RK73FB2A331J	CHIP R 330 J 1/10W		
R175			RK73FB2A222J	CHIP R 2.2K J 1/10W		
R176			RK73FB2A221J	CHIP R 220 J 1/10W		
R177,178			RK73FB2A223J	CHIP R 22K J 1/10W		
R179			RK73FB2A682J	CHIP R 6.8K J 1/10W		
R180,181			RK73FB2A103J	CHIP R 10K J 1/10W		
R182			RK73FB2A223J	CHIP R 22K J 1/10W		
R183,184			RK73FB2A102J	CHIP R 1.0K J 1/10W		
R185			RK73FB2A562J	CHIP R 5.6K J 1/10W		
R186			RK73FB2A271J	CHIP R 270 J 1/10W		
R187			RK73FB2A152J	CHIP R 1.5K J 1/10W		
R188			RK73FB2A822J	CHIP R 8.2K J 1/10W		
R189			RK73FB2A221J	CHIP R 220 J 1/10W		
R190			RK73FB2A472J	CHIP R 4.7K J 1/10W		
R191			RK73FB2A471J	CHIP R 470 J 1/10W		
R192			RK73FB2A472J	CHIP R 4.7K J 1/10W		
R193			RK73FB2A221J	CHIP R 220 J 1/10W		
R194			RK73FB2A472J	CHIP R 4.7K J 1/10W		
R195			RK73FB2A473J	CHIP R 47K J 1/10W		

L:Scandinavia K:USA P:Canada
Y:PX(Far East, Hawaii) T:England E:Europe
Y:AAFES(Europe) X:Australia M:Other Areas

⚠ indicates safety critical components.

PARTS LIST

* New Parts
Parts without Parts No. are not supplied.
Les articles non mentionnes dans le Parts No. ne sont pas fournis.
Teile ohne Parts No. werden nicht geliefert.

SIGNAL UNIT (X57-4130-00)

Ref. No. 参照番号	Address 位置	New Parts 新	Parts No. 部品番号	Description 部品名／規格	Destination 仕向	Remarks 備考
R196			RK73FB2A223J	CHIP R 22K J 1/10W		
R197			RK73FB2A471J	CHIP R 470 J 1/10W		
R198			RK73FB2A472J	CHIP R 4.7K J 1/10W		
R199			RK73FB2A221J	CHIP R 220 J 1/10W		
R200,201			RK73FB2A472J	CHIP R 4.7K J 1/10W		
R202			RK73FB2A221J	CHIP R 220 J 1/10W		
R203			RK73FB2A473J	CHIP R 47K J 1/10W		
R204,205			RK73FB2A223J	CHIP R 22K J 1/10W		
R206			RK73FB2A103J	CHIP R 10K J 1/10W		
R207			RK73FB2A154J	CHIP R 150K J 1/10W		
R208			RK73FB2A103J	CHIP R 10K J 1/10W		
R209			RK73FB2A221J	CHIP R 220 J 1/10W		
R210			RK73FB2A332J	CHIP R 3.3K J 1/10W		
R211			RK73FB2A472J	CHIP R 4.7K J 1/10W		
R212			RK73FB2A332J	CHIP R 3.3K J 1/10W		
R213,214			RK73FB2A103J	CHIP R 10K J 1/10W		
R215,216			RK73FB2A222J	CHIP R 2.2K J 1/10W		
R217			RK73FB2A102J	CHIP R 1.0K J 1/10W		
R219,220			RK73FB2A223J	CHIP R 22K J 1/10W		
R221			RK73FB2A222J	CHIP R 2.2K J 1/10W		
R229			RK73FB2A390J	CHIP R 39 J 1/10W		
R230			RK73FB2A153J	CHIP R 15K J 1/10W		
R231			RK73FB2A822J	CHIP R 8.2K J 1/10W		
R232			RK73FB2A333J	CHIP R 33K J 1/10W		
R233			RK73FB2A471J	CHIP R 470 J 1/10W		
R234			RK73FB2A104J	CHIP R 100K J 1/10W		
R235,236			RK73FB2A221J	CHIP R 220 J 1/10W		
R239			R92-0670-05	CHIP R 0 OHM		
R240			RK73FB2A104J	CHIP R 100K J 1/10W		
R243			RK73FB2A102J	CHIP R 1.0K J 1/10W		
R244			RK73FB2A182J	CHIP R 1.8K J 1/10W		
R245			RK73FB2A221J	CHIP R 220 J 1/10W		
R246			RK73FB2A331J	CHIP R 330 J 1/10W		
R247			RK73FB2A472J	CHIP R 4.7K J 1/10W		
R248			RK73FB2A153J	CHIP R 15K J 1/10W		
R249			RK73FB2A472J	CHIP R 4.7K J 1/10W		
R250			RK73FB2A392J	CHIP R 3.9K J 1/10W		
R251			RK73FB2A102J	CHIP R 1.0K J 1/10W		
R252			RK73FB2A104J	CHIP R 100K J 1/10W		
R253			RK73FB2A101J	CHIP R 100 J 1/10W		
R254			RK73FB2A330J	CHIP R 33 J 1/10W		
R255			RK73FB2A681J	CHIP R 680 J 1/10W		
R256			RK73FB2A392J	CHIP R 3.9K J 1/10W		
R257			RK73FB2A183J	CHIP R 18K J 1/10W		
R258			RK73FB2A680J	CHIP R 68 J 1/10W		
R259			RK73FB2A332J	CHIP R 3.3K J 1/10W		
R260			RK73FB2A221J	CHIP R 220 J 1/10W		
R263			RK73FB2A682J	CHIP R 6.8K J 1/10W		
R265			RK73FB2A152J	CHIP R 1.5K J 1/10W		
R266			RK73FB2A682J	CHIP R 6.8K J 1/10W		
R267			RK73FB2A471J	CHIP R 470 J 1/10W		
R268,269			RK73FB2A101J	CHIP R 100 J 1/10W		
R270			RK73FB2A124J	CHIP R 120K J 1/10W		
R271			RK73FB2A473J	CHIP R 47K J 1/10W		
R272			RK73FB2A471J	CHIP R 470 J 1/10W		

L:Scandinavia K:USA P:Canada
Y:PX(Far East, Hawaii) T:England E:Europe
Y:AAFES(Europe) X:Australia M:Other Areas

⚠ indicates safety critical components.

PARTS LIST

* New Parts
Parts without Parts No. are not supplied.
Les articles non mentionnes dans le Parts No. ne sont pas fournis.
Teile ohne Parts No. werden nicht geliefert.

SIGNAL UNIT (X57-4130-00)

Ref. No. 参照番号	Address 位置	New Parts 新	Parts No. 部品番号	Description 部品名／規格	Destination 仕向	Remarks 備考
R274			RK73FB2A103J	CHIP R 10K J 1/10W		
R277			RK73FB2A681J	CHIP R 680 J 1/10W		
R279			RK73FB2A153J	CHIP R 15K J 1/10W		
R280			RK73FB2A123J	CHIP R 12K J 1/10W		
R281			RK73FB2A121J	CHIP R 120 J 1/10W		
R282			RK73FB2A103J	CHIP R 10K J 1/10W		
R284			RK73FB2A103J	CHIP R 10K J 1/10W		
R285			RK73FB2A100J	CHIP R 10 J 1/10W		
R288			RK73FB2A223J	CHIP R 22K J 1/10W		
R289			RK73FB2A393J	CHIP R 39K J 1/10W		
R290			R92-0670-05	CHIP R 0 ØHM		
R291			R92-0679-05	CHIP R 0 ØHM		
R292			RK73FB2A473J	CHIP R 47K J 1/10W		
R301			RK73FB2A101J	CHIP R 100 J 1/10W		
R302			RK73FB2A472J	CHIP R 4.7K J 1/10W		
R303			RK73FB2A102J	CHIP R 1.0K J 1/10W		
R304			RK73FB2A122J	CHIP R 1.2K J 1/10W		
R305			RK73FB2A123J	CHIP R 12K J 1/10W		
R306			RK73FB2A224J	CHIP R 220K J 1/10W		
R307			RK73FB2A152J	CHIP R 1.5K J 1/10W		
R308-310			RK73FB2A103J	CHIP R 10K J 1/10W		
R311			RK73FB2A102J	CHIP R 1.0K J 1/10W		
R312			RK73FB2A104J	CHIP R 100K J 1/10W		
R313			RK73FB2A101J	CHIP R 100 J 1/10W		
R314			RK73FB2A472J	CHIP R 4.7K J 1/10W		
R317			R92-0670-05	CHIP R 0 ØHM		
R318			RK73FB2A222J	CHIP R 2.2K J 1/10W		
R319			R92-0679-05	CHIP R 0 ØHM		
VR1			R12-3126-05	TRIM PØT. 10K		
VR2			R12-3132-05	TRIM PØT. 47K		
VR3			R12-3128-05	TRIM PØT. 22K		
VR7 ,8			R12-3132-05	TRIM PØT. 47K		
VR10			R12-3130-05	TRIM PØT. 33K		
VR301			R12-1089-05	TRIM PØT.		
D1 -11			RLS135	CHIP DIØDE		
D14			RLS135	CHIP DIØDE		
D15			1SV149A	DIØDE		
D20			RLZ5.1A	CHIP ZENER DIØDE(5.1V)		
D21 ,22			RLS73	CHIP DIØDE		
D23			HSM88AS	CHIP DIØDE		
D24			DAN202K	CHIP DIØDE		
D27 -29			RLS73	CHIP DIØDE		
D31			HSM88AS	CHIP DIØDE		
D32			RLS73	CHIP DIØDE		
D34 ,35			RLS73	CHIP DIØDE		
D36 ,37			DAN202K	CHIP DIØDE		
D38 ,39			RLS73	CHIP DIØDE		
D40			DAN202K	CHIP DIØDE		
D42			HSM88AS	CHIP DIØDE		
D43 ,44			RLS73	CHIP DIØDE		
D45 -48			RLS135	CHIP DIØDE		
D49 -51			1N60	DIØDE		
D52			RLS73	CHIP DIØDE		

L:Scandinavia K:USA P:Canada
Y:PX(Far East, Hawaii) T:England E:Europe
Y:AAFES(Europe) X:Australia M:Other Areas

⚠ indicates safety critical components.

PARTS LIST

* New Parts
Parts without Parts No. are not supplied.
Les articles non mentionnes dans le Parts No. ne sont pas fournis.
Teile ohne Parts No. werden nicht geliefert.

SIGNAL UNIT (X57-4130-00)

Ref. No. 参照番号	Address 位置	New Parts 新	Parts No. 部品番号	Description 部品名／規格	Destination 仕向	Remarks 備考
D53			DAN202K	CHIP DIODE		
D56			DAN202K	CHIP DIODE		
D59			DAN202K	CHIP DIODE		
D60 -62			RLS135	CHIP DIODE		
D65			RLS73	CHIP DIODE		
D66 ,67			HSM88AS	CHIP DIODE		
D68 -70			RLS73	CHIP DIODE		
D71			RLZJ9.1C	CHIP ZENER DIODE(9.1V)		
D74			RLS73	CHIP DIODE		
IC1			TC4066BF	IC(BILATERAL SWITCH X4)		
IC3			UPC1158H2	IC(ALC AMP)		
IC5			TA7302P	IC(FM IF)		
IC6 ,7			UPC577H	IC		
IC8			TC9174F	IC(CMOS I/O)		
IC10			TC4066BF	IC(BILATERAL SWITCH X4)		
Q1 -4			3SK131(M)	FET		
Q5 -10			2SC2712(Y)	TRANSISTOR		
Q11			2SK210(Y)	FET		
Q12			2SC2712(Y)	TRANSISTOR		
Q13			2SA1162(Y)	TRANSISTOR		
Q19 ,20			2SC2712(Y)	TRANSISTOR		
Q22			2SC2712(Y)	TRANSISTOR		
Q25			2SC2712(Y)	TRANSISTOR		
Q27			3SK131(M)	FET		
Q28 ,29			2SC2712(Y)	TRANSISTOR		
Q30			3SK131(M)	FET		
Q33 ,34			2SC2712(Y)	TRANSISTOR		
Q35 ,36			DTC124EK	DIGITAL TRANSISTOR		
Q37 ,38			DTA143EK	DIGITAL TRANSISTOR		
Q39			DTC124EK	DIGITAL TRANSISTOR		
Q41 ,42			DTA124EK	DIGITAL TRANSISTOR		
Q43			DTC124EK	DIGITAL TRANSISTOR		
Q48 ,49			DTA124EK	DIGITAL TRANSISTOR		
Q51			DTC124EK	DIGITAL TRANSISTOR		
Q52			DTA124EK	DIGITAL TRANSISTOR		
Q53 ,54			DTC124EK	DIGITAL TRANSISTOR		
Q55 ,56			DTA124EK	DIGITAL TRANSISTOR		
Q57			DTC124EK	DIGITAL TRANSISTOR		
Q58			DTA124EK	DIGITAL TRANSISTOR		
Q59			DTC124EK	DIGITAL TRANSISTOR		
Q60 -62			DTA124EK	DIGITAL TRANSISTOR		
Q65			DTA124EK	DIGITAL TRANSISTOR		
Q66 ,67			DTC124EK	DIGITAL TRANSISTOR		
Q301			DTA114EK	DIGITAL TRANSISTOR		
Q302			DTC114EK	DIGITAL TRANSISTOR		
Q303			2SC2712(Y)	TRANSISTOR		
Q304			2SK210(Y)	FET		
Q305			DTC124EK	DIGITAL TRANSISTOR		
TH1 ,2			112-502-2	THERMISTOR 5K		
TH4			112-101-2	THERMISTOR 100		
TH5			112-103-2	THERMISTOR 10K		
TH6			112-302-2	THERMISTOR 3K		
TH7 ,8			112-502-2	THERMISTOR 5K		
TH9			157-203-55009	THERMISTOR 20K		

L:Scandinavia K:USA P:Canada
Y:PX(Far East, Hawaii) T:England E:Europe
Y:AAFES(Europe) X:Australia M:Other Areas

⚠ indicates safety critical components.

TS-950SDX

PARTS LIST

⁎ New Parts
Parts without Parts No. are not supplied.
Les articles non mentionnes dans le Parts No. ne sont pas fournis.
Teile ohne Parts No. werden nicht geliefert.

SIGNAL UNIT (X57-4130-00)
VCO2 (X58-3390-03)
VCO (X58-3630-XX)

Ref. No. 参照番号	Address 位置	New Parts 新	Parts No. 部品番号	Description 部品名／規格	Destination 仕向	Remarks 備考
			212-2016-05	PLASTIC TUBE		
VCO2 (X58-3390-03)						
A7			B42-2437-04	LABEL(S/NO.)		
C1			CK73FB1H102K	CHIP C 1000PF K		
C2			CC73FSL1H101J	CHIP C 100PF J		
C3			CC73FCH1H070D	CHIP C 7PF D		
C4			CC73FCH1H220J	CHIP C 22PF J		
C5			CC73FCH1H070D	CHIP C 7PF D		
C6			CC73FCH1H180J	CHIP C 18PF J		
C7			CC73FCH1H120J	CHIP C 12PF J		
C8 ,9			CK73FB1H102K	CHIP C 1000PF K		
C10			CC73FCH1H010C	CHIP C 1PF C		
C11			CK73FB1H102K	CHIP C 1000PF K		
TC1			C05-0331-05	TRIMMER CAPACITOR		
TP1 -3			E23-0603-05	TERMINAL		
A1			F11-1085-04	SHIELDING CASE		
A2			F11-1086-04	SHIELDING CASE		
A6			G13-0904-04	FORMED PLATE		
L1			L33-0690-05	CHOKE COIL		
L2			L34-2353-05	COIL		
A3 -5			N30-2604-41	PAN HEAD MACHIN SCREW		
R1			RK73FB2A682J	CHIP R 6.8K J 1/10W		
R2			RK73FB2A271J	CHIP R 270 J 1/10W		
R3			RK73FB2A330J	CHIP R 33 J 1/10W		
R4 ,5			RK73FB2A472J	CHIP R 4.7K J 1/10W		
R6			RK73FB2A471J	CHIP R 470 J 1/10W		
R7			RK73FB2A560J	CHIP R 56 J 1/10W		
D1			1SV164	DIODE		
Q1			2SK508NV(K52)	FET		
Q2			2SC2714(Y)	TRANSISTOR		
VCO (X58-3630-XX) -00 : AF -01 : PLL						
C1			CK73FB1H102K	CHIP C 1000PF K	00	
C1			CK73FB1E103K	CHIP C 0.010UF K	01	
C2			CC73FCH1H680J	CHIP C 68PF J	00	
C2			CC73FCH1H470J	CHIP C 47PF J	01	
C3			CC73FCH1H220J	CHIP C 22PF J	00	
C3			CC73FCH1H040C	CHIP C 4PF C	01	
C4			CC73FCH1H330J	CHIP C 33PF J		
C5			CC73FCH1H120J	CHIP C 12PF J		
C6			CC73FCH1H120J	CHIP C 12PF J	00	
C6			CC73FCH1H100D	CHIP C 10PF J	01	
C7 ,8			CK73FB1H102K	CHIP C 1000PF K	00	
C7 ,8			CK73FB1E103K	CHIP C 0.010UF K	01	
C9			CC73FCH1H390J	CHIP C 39PF J	00	
C9			CC73FCH1H680J	CHIP C 68PF J	01	
C10			CC73FCH1H150J	CHIP C 15PF J	00	
C10			CC73FCH1H120J	CHIP C 12PF J	01	
C11			CC73FCH1H330J	CHIP C 33PF J		
C12			CC73FCH1H120J	CHIP C 12PF J		

L:Scandinavia K:USA P:Canada
Y:PX(Far East, Hawaii) T:England E:Europe
Y:AAFES(Europe) X:Australia M:Other Areas

⚠ indicates safety critical components.

PARTS LIST

× New Parts
Parts without Parts No. are not supplied.
Les articles non mentionnes dans le Parts No. ne sont pas fournis.
Teile ohne Parts No. werden nicht geliefert.

VCO (X58-3630-XX)

Ref. No. 参照番号	Address 位置	New Parts 新	Parts No. 部品番号	Description 部品名／規格	Destination 仕向	Remarks 備考
C13			CC73FCH1H150J	CHIP C 15PF J		
C14 ,15			CK73FB1H102K	CHIP C 1000PF K	00	
C14 ,15			CK73FB1E103K	CHIP C 0.010UF K	01	
C16			CC73FCH1H330J	CHIP C 33PF J	00	
C16			CC73FCH1H560J	CHIP C 56PF J	01	
C17			CC73FCH1H120J	CHIP C 12PF J	00	
C17			CC73FCH1H060D	CHIP C 6PF D	01	
C18			CC73FCH1H330J	CHIP C 33PF J		
C19			CC73FCH1H120J	CHIP C 12PF J		
C20			CC73FCH1H150J	CHIP C 15PF J		
C21 ,22			CK73FB1H102K	CHIP C 1000PF K	00	
C21 ,22			CK73FB1E103K	CHIP C 0.010UF K	01	
C23			CC73FCH1H270J	CHIP C 27PF J	00	
C23			CC73FCH1H820J	CHIP C 82PF J	01	
C24			CC73FCH1H100D	CHIP C 10PF D		
C25			CC73FCH1H330J	CHIP C 33PF J		
C26			CC73FCH1H120J	CHIP C 12PF J		
C27			CC73FCH1H030C	CHIP C 3PF C	00	
C27			CC73FCH1H220J	CHIP C 22PF J	01	
C28			CK73FB1H102K	CHIP C 1000PF K	00	
C28			CK73FB1E103K	CHIP C 0.010UF K	01	
C29 ,30			C91-0119-05	CERAMIC 0.047UF K		
TC1 ,2			C05-0331-05	TRIMMER CAPACITOR 10PF		
TC3 ,4			C05-0332-05	TRIMMER CAPACITOR 6PF	00	
TC3 ,4			C05-0331-05	TRIMMER CAPACITOR 10PF	01	
W1			E40-5158-05	PIN CONNECTOR FOR INSIDE		
W2			E40-5159-05	PIN CONNECTOR FOR INSIDE		
A1			F11-1140-04	SHIELDING CASE		
A2			F11-1141-04	SHIELDING CASE		
L1			L33-0664-05	CHOKE COIL		
L2			L34-2354-05	COIL	00	
L2			L34-2355-05	COIL	01	
L3			L40-4791-19	SMALL FIXED INDUCTOR		
L4			L33-0664-05	CHOKE COIL		
L5			L34-2354-05	COIL	00	
L5			L34-2355-05	COIL	01	
L6			L40-4791-19	SMALL FIXED INDUCTOR		
L7			L33-0664-05	CHOKE COIL		
L8			L34-2354-05	COIL	00	
L8			L34-2356-05	COIL	01	
L9			L40-4791-19	SMALL FIXED INDUCTOR		
L10			L33-0664-05	CHOKE COIL		
L11			L34-2354-05	COIL	00	
L11			L34-2357-05	COIL	01	
L12			L40-4791-19	SMALL FIXED INDUCTOR		
R1			RK73FB2A101J	CHIP R 100 J 1/10W		
R2			RK73FB2A473J	CHIP R 47K J 1/10W		
R3			RK73FB2A105J	CHIP R 1.0M J 1/10W		
R4			RK73FB2A104J	CHIP R 100K J 1/10W		
R5 ,6			RK73FB2A101J	CHIP R 100 J 1/10W		
R7			RK73FB2A473J	CHIP R 47K J 1/10W		
R8			RK73FB2A105J	CHIP R 1.0M J 1/10W		
R9			RK73FB2A104J	CHIP R 100K J 1/10W		

L:Scandinavia K:USA P:Canada
Y:PX(Far East, Hawaii) T:England E:Europe
Y:AAFES(Europe) X:Australia M:Other Areas

⚠ indicates safety critical components.

PARTS LIST

* New Parts
Parts without Parts No. are not supplied.
Les articles non mentionnes dans le Parts No. ne sont pas fournis.
Teile ohne Parts No. werden nicht geliefert.

VCO (X58-3630-XX)
VOX (X59-1080-01)
FM MIC (X59-3000-03)

Ref. No. 参照番号	Address 位置	New Parts 新	Parts No. 部品番号	Description 部品名／規格	Destination 仕向	Remarks 備考
R10			RK73FB2A101J	CHIP R 100 J 1/10W		
R11			RK73FB2A101J	CHIP R 100 J 1/10W	00	
R12			RK73FB2A473J	CHIP R 47K J 1/10W		
R13			RK73FB2A105J	CHIP R 1.0M J 1/10W		
R14			RK73FB2A104J	CHIP R 100K J 1/10W		
R15 ,16			RK73FB2A101J	CHIP R 100 J 1/10W		
R17			RK73FB2A473J	CHIP R 47K J 1/10W		
R18			RK73FB2A105J	CHIP R 1.0M J 1/10W		
R19			RK73FB2A104J	CHIP R 100K J 1/10W		
R20			RK73FB2A101J	CHIP R 100 J 1/10W		
R21			RK73FB2A101J	CHIP R 100 J 1/10W	01	
W3 ,4			R92-0670-05	CHIP R 0 OHM		
D1			1SV166	DIODE		
D2			RLS135	DIODE		
D3			1SV166	DIODE		
D4			RLS135	DIODE		
D5			1SV166	DIODE		
D6			RLS135	DIODE		
D7			1SV166	DIODE		
D8			RLS135	DIODE		
Q1 -4			2SK210(GR)	FET		
VOX (X59-1080-01)						
C1			CK73FB1H102K	CHIP C 1000PF K		
C2			CK73FB1E223K	CHIP C 0.022UF K		
			E23-0471-05	TERMINAL		
R1			RK73FB2A104J	CHIP R 100K J 1/10W		
R2			RK73FB2A103J	CHIP R 10K J 1/10W		
R3			RK73FB2A472J	CHIP R 4.7K J 1/10W		
R4 ,5			RK73FB2A103J	CHIP R 10K J 1/10W		
R6 ,7			RK73FB2A105J	CHIP R 1.0M J 1/10W		
R8			RK73FB2A104J	CHIP R 100K J 1/10W		
R9			RK73FB2A105J	CHIP R 1.0M J 1/10W		
R10			RK73FB2A103J	CHIP R 10K J 1/10W		
W1 -3			R92-0670-05	CHIP R 0 OHM		
D1 ,2			DAP202K	DIODE		
IC1			LM2904M	IC(OP AMP X2)		
IC2			TC4001BF	IC(NOR X6)		
Q1			2SC2712(Y)	TRANSISTOR		
FM MIC (X59-3000-03)						
C1			CC73FCH1H680J	CHIP C 68PF J		
C2			CK73FB1H561K	CHIP C 560PF K		
C3			CC73FCH1H390J	CHIP C 39PF J		
C4			CK73FB1H102K	CHIP C 1000PF K		
			E23-0471-05	TERMINAL		
JR1			R92-0670-05	CHIP R 0 OHM		
R1			RK73FB2A105J	CHIP R 1.0M J 1/10W		
R2			RK73FB2A823J	CHIP R 82K J 1/10W		
R3			RK73FB2A562J	CHIP R 5.6K J 1/10W		
R4			RK73FB2A472J	CHIP R 4.7K J 1/10W		
R5 ,6			RK73FB2A224J	CHIP R 220K J 1/10W		
IC1			NJM4558M	IC(OP AMP X2)		

L:Scandinavia K:USA P:Canada
Y:PX(Far East, Hawaii) T:England E:Europe
Y:AAFES(Europe) X:Australia M:Other Areas

⚠ indicates safety critical components.

PARTS LIST

× New Parts
Parts without Parts No. are not supplied.
Les articles non mentionnes dans le Parts No. ne sont pas fournis.
Teile ohne Parts No. werden nicht geliefert.

NB2 (X59-3350-00)
VCO1 (X59-3440-00)
LPF (X59-3450-XX)
MKR (X59-3640-00)

Ref. No. 参照番号	Address 位置	New Parts 新	Parts No. 部品番号	Description 部品名／規格	Destination 仕向	Remarks 備考
NB2 (X59-3350-00)						
C1			CK73FB1H103K	CHIP C 0.010UF K		
C2			CK73FB1H102K	CHIP C 1000PF K		
C3			CK73EF1E474Z	CHIP C 0.47UF Z		
			E23-0471-05	TERMINAL		
R1			RK73FB2A103J	CHIP R 10K J 1/10W		
R2			RK73FB2A563J	CHIP R 56K J 1/10W		
R3			RK73FB2A684J	CHIP R 680K J 1/10W		
R4			RK73FB2A103J	CHIP R 10K J 1/10W		
R5			RK73FB2A184J	CHIP R 180K J 1/10W		
W1 -3			R92-0670-05	CHIP R 0 OHM		
IC1			TC4011BF	IC(NAND X4)		
Q1 ,2			DTC114EK	DIGITAL TRANSISTOR		
VCO1 (X59-3440-00)						
C1			CC73FCH1H080D	CHIP C 8PF D		
C2			CK73FB1H102K	CHIP C 1000PF K		
C3			CC73FCH1H030C	CHIP C 3PF C		
C4			CK73FB1H103K	CHIP C 0.010UF K		
			E23-0471-05	TERMINAL		
L1			L40-1011-48	SMALL FIXED INDUCTOR		
R1			RK73FB2A334J	CHIP R 330K J 1/10W		
R2			RK73FB2A151J	CHIP R 150 J 1/10W		
R3			RK73FB2A330J	CHIP R 33 J 1/10W		
R4			RK73FB2A224J	CHIP R 220K J 1/10W		
R5			RK73FB2A470J	CHIP R 47 J 1/10W		
R6			RK73FB2A101J	CHIP R 100 J 1/10W		
R7			RK73FB2A102J	CHIP R 1.0K J 1/10W		
Q1			2SK210(GR)	FET		
Q2			2SC2714(Y)	TRANSISTOR		
LPF (X59-3450-XX) -00 : AF -01 : PLL, CAR						
C1			CK73FB1H103K	CHIP C 0.010UF K		
			E23-0471-05	TERMINAL		
R1			RK73FB2A102J	CHIP R 1.0K J 1/10W		
R2			RK73FB2A221J	CHIP R 220 J 1/10W		
R3			RK73FB2A154J	CHIP R 150K J 1/10W		
R4			RK73FB2A103J	CHIP R 10K J 1/10W		
Q1 -3			2SC3324(G)	TRANSISTOR		
MKR (X59-3640-00)						
C3 ,4			CK73FF1E104Z	CHIP C 0.1UF Z		
			E23-0471-05	TERMINAL		
R1			RK73FB2A223J	CHIP R 22K J 1/10W		
R2			RK73FB2A472J	CHIP R 4.7K J 1/10W		
R3			RK73FB2A561J	CHIP R 560 J 1/10W		
W1 ,2			R92-0670-05	CHIP R 0 OHM		
D1			DA204K	DIODE		
D2			RLS73	DIODE		

L:Scandinavia K:USA P:Canada
Y:PX(Far East, Hawaii) T:England E:Europe
Y:AAFES(Europe) X:Australia M:Other Areas

⚠ indicates safety critical components.

TS-950SDX

PARTS LIST

MKR (X59-3640-00)
CWT (X59-3660-00)
MAP (X59-3670-00)
TRX (X59-3680-00)
ALC (X59-3700-00)

× New Parts
Parts without Parts No. are not supplied.
Les articles non mentionnes dans le Parts No. ne sont pas fournis.
Teile ohne Parts No. werden nicht geliefert.

Ref. No. 参照番号	Address 位置	New Parts 新	Parts No. 部品番号	Description 部品名／規格	Destination 仕向	Remarks 備考
IC1			TC4013BF	IC(D FLIP-FLOP X2)		
CWT (X59-3660-00)						
C201			CK73FB1E473K	CHIP C 0.047UF K		
C202			CK73FF1E104Z	CHIP C 0.1UF Z		
			E23-0471-05	TERMINAL		
R201-204			RK73FB2A103J	CHIP R 10K J 1/10W		
R205			RK73FB2A222J	CHIP R 2.2K J 1/10W		
R206			RK73FB2A103J	CHIP R 10K J 1/10W		
W201,202			R92-0670-05	CHIP R 0 OHM		
D201,202			RLS73	DIODE		
D203			RLZJ3.6B	DIODE		
D204			RLZJ4.7B	DIODE		
Q201			2SA1162(Y)	TRANSISTOR		
Q202			DTA144EK	DIGITAL TRANSISTOR		
Q203,204			DTC144EK	DIGITAL TRANSISTOR		
Q205			DTA144EK	DIGITAL TRANSISTOR		
Q206			DTC144EK	DIGITAL TRANSISTOR		
Q207			DTA144EK	DIGITAL TRANSISTOR		
Q208			DTC114TK	DIGITAL TRANSISTOR		
MAP (X59-3670-00)						
C301			CK73FB1E473K	CHIP C 0.047UF K		
			E23-0471-05	TERMINAL		
IC301			NJM4558M	IC(OP AMP X2)		
R301			RK73FB2A105J	CHIP R 1.0M J 1/10W	00	
R301			RK73FB2A334J	CHIP R 330K J 1/10W	01	
R302			RK73FB2A104J	CHIP R 100K J 1/10W		
R303			RK73FB2A105J	CHIP R 1.0M J 1/10W		
R304			RK73FB2A104J	CHIP R 100K J 1/10W		
R305,306			RK73FB2A102J	CHIP R 1.0K J 1/10W		
R307-309			RK73FB2A224J	CHIP R 220K J 1/10W		
R310			RK73FB2A104J	CHIP R 100K J 1/10W		
TRX (X59-3680-00)						
			E23-0471-05	TERMINAL		
R151			RK73FB2A471J	CHIP R 470 J 1/10W		
R152			RK73FB2A103J	CHIP R 10K J 1/10W		
R153			RK73FB2A473J	CHIP R 47K J 1/10W		
R154			RK73FB2A103J	CHIP R 10K J 1/10W		
R155			RK73FB2A471J	CHIP R 470 J 1/10W		
R156			RK73FB2A103J	CHIP R 10K J 1/10W		
Q151,152			2SA1204(Y)	TRANSISTOR		
Q153-155			DTC114TK	DIGITAL TRANSISTOR		
ALC (X59-3700-00)						
C251			CK73FB1E473K	CHIP C 0.047UF K		
C252			CK73FB1H103K	CHIP C 0.010UF K		
C253			CK73FB1H223K	CHIP C 0.022UF K		
			E23-0471-05	TERMINAL		
R251			RK73FB2A104J	CHIP R 100K J 1/10W		
R252-254			RK73FB2A473J	CHIP R 47K J 1/10W		

L:Scandinavia K:USA P:Canada
Y:PX(Far East, Hawaii) T:England E:Europe
Y:AAFES(Europe) X:Australia M:Other Areas

⚠ indicates safety critical components.

PARTS LIST

* New Parts
Parts without Parts No. are not supplied.
Les articles non mentionnes dans le Parts No. ne sont pas fournis.
Teile ohne Parts No. werden nicht geliefert.

ALC (X59-3700-00)
MIC AMP (X59-3710-01)

Ref. No. 参照番号	Address 位置	New Parts 新	Parts No. 部品番号	Description 部品名／規格	Destination 仕向	Remarks 備考
R255			RK73FB2A223J	CHIP R 22K J 1/10W		
R256			RK73FB2A473J	CHIP R 47K J 1/10W		
R257			RK73FB2A472J	CHIP R 4.7K J 1/10W		
W251			R92-0670-05	CHIP R 0 OHM		
D251			RLS73	DIODE		
D252			RLZJ12B	DIODE		
Q251			2SC2712(Y)	TRANSISTOR		
Q252			DTC144EK	DIGITAL TRANSISTOR		
Q253			DTA144EK	DIGITAL TRANSISTOR		
Q254,255			DTC144EK	DIGITAL TRANSISTOR		
MIC AMP (X59-3710-01)						
C251			CK73FF1H103Z	CHIP C 0.010UF Z		
C252			CC73FCH1H101J	CHIP C 100PF J		
C253			CK73EF1C105Z	CHIP C 1.0UF Z		
C254			CC73FCH1H101J	CHIP C 100PF J		
C255			CK73FB1H102K	CHIP C 1000PF K		
			E23-0471-05	TERMINAL		
R251			RK73FB2A221J	CHIP R 220 J 1/10W		
R252			RK73FB2A562J	CHIP R 5.6K J 1/10W		
R253			RK73FB2A101J	CHIP R 100 J 1/10W		
R254			RK73FB2A102J	CHIP R 1.0K J 1/10W		
R255			RK73FB2A104J	CHIP R 100K J 1/10W		
R256			RK73FB2A223J	CHIP R 22K J 1/10W		
R257			RK73FB2A472J	CHIP R 4.7K J 1/10W		
R258			RK73FB2A102J	CHIP R 1.0K J 1/10W		
R259			RK73FB2A103J	CHIP R 10K J 1/10W		
R260,261			R92-0670-05	CHIP R 0 OHM		
R262			RK73FB2A472J	CHIP R 4.7K J 1/10W		
R263			RK73FB2A333J	CHIP R 33K J 1/10W		
D251			DAN202K			
Q251			2SC3324(G)	TRANSISTOR		
Q252,253			DTA114EK	DIGITAL TRANSISTOR		
Q254			DTC114TK	DIGITAL TRANSISTOR		
Q255			DTC114EK	DIGITAL TRANSISTOR		

L:Scandinavia K:USA P:Canada
Y:PX(Far East, Hawaii) T:England E:Europe
Y:AAFES(Europe) X:Australia M:Other Areas

⚠ indicates safety critical components.

TS-950SDX

EXPLODED VIEW

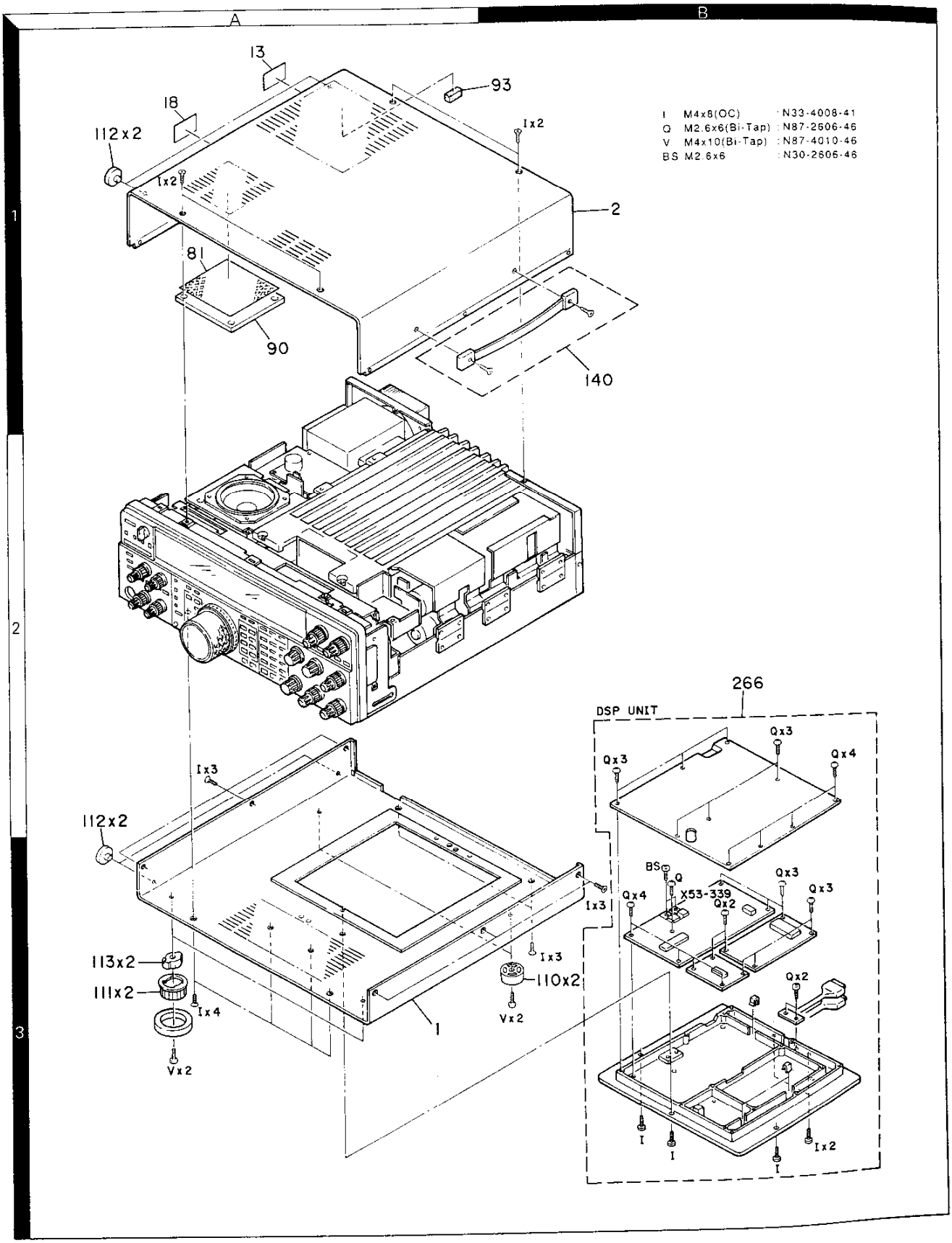

EXPLODED VIEW

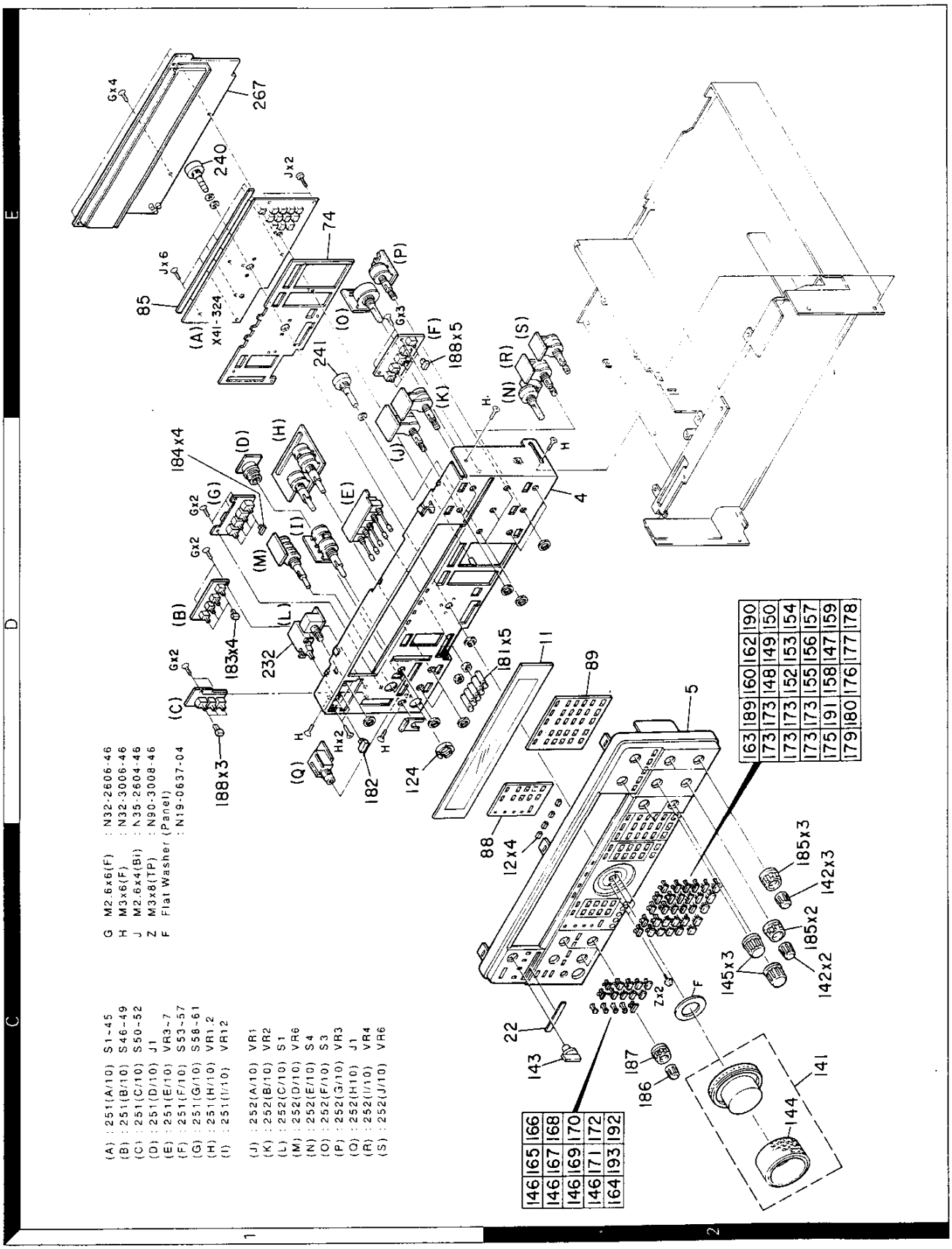

TS-950SDX

EXPLODED VIEW

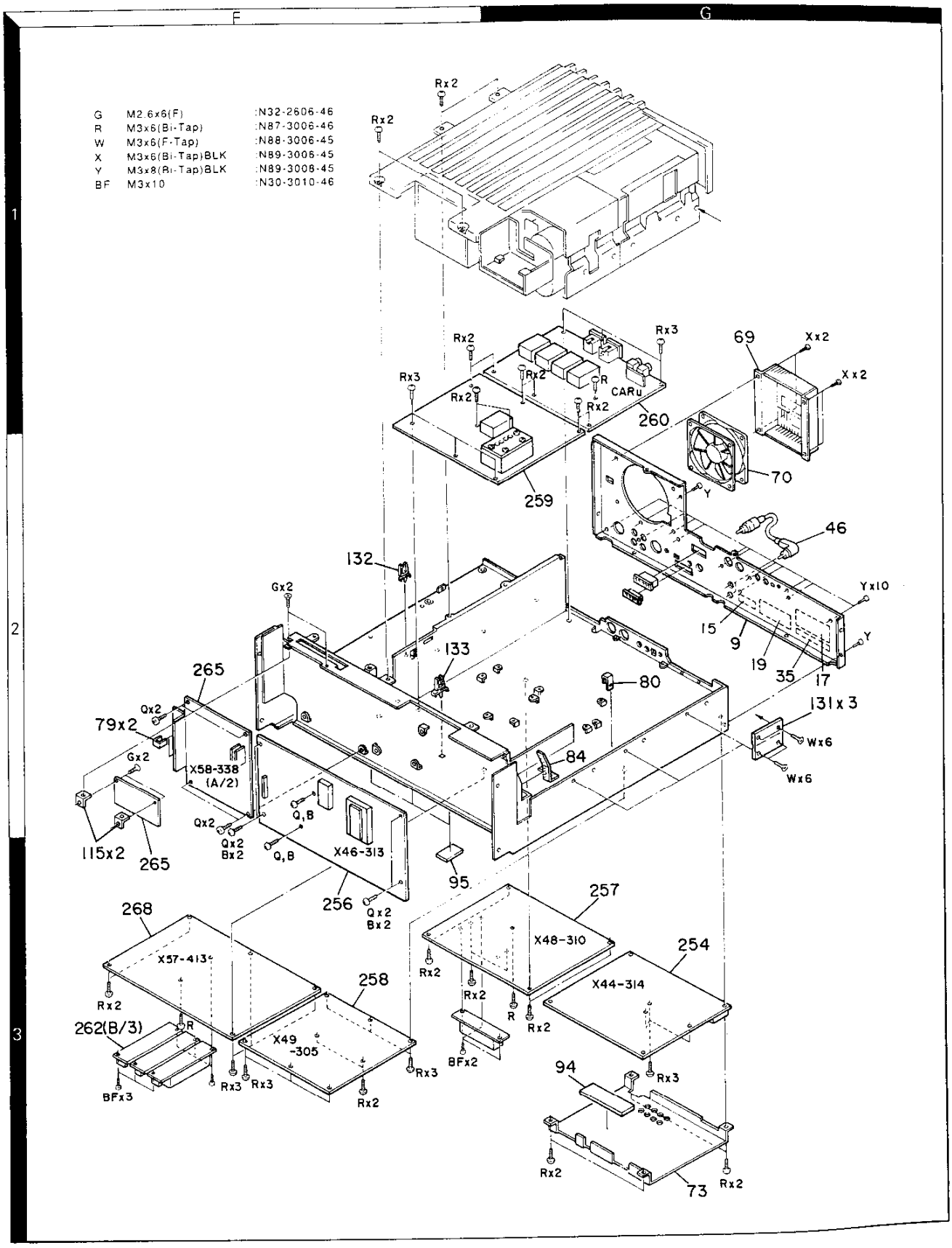

EXPLODED VIEW

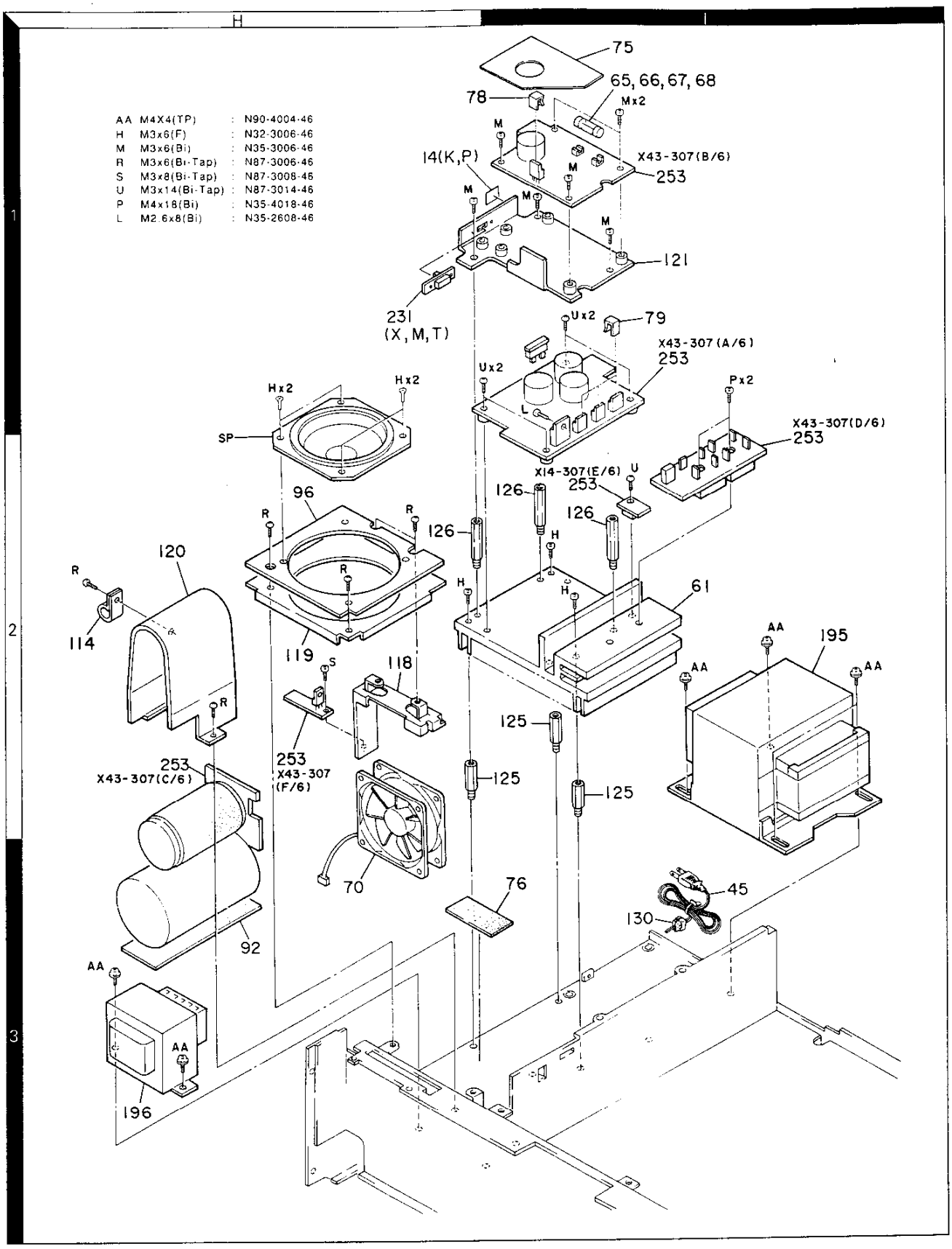

TS-950SDX

EXPLODED VIEW

A	M4x16	:N09-0682-04
C	NUT	:N14-0115-05
D	NUT	:N14-0509-05
E	Flat washer	:N15-1040-46
Q	M2.6x6(Bi-Tap)	:N87-2606-46
R	M3x6(Bi-Tap)	:N87-3006-46
S	M3x8(Bi-Tap)	:N87-3008-46
T	M3x10(Bi-Tap)	:N87-3010-46
X	M3x6(Bi-Tap)BLK	:N89-3006-45
BC		:N09-2120-04
BE	M3x8	:N30-3008-46
BF	M3x10	:N30-3010-46

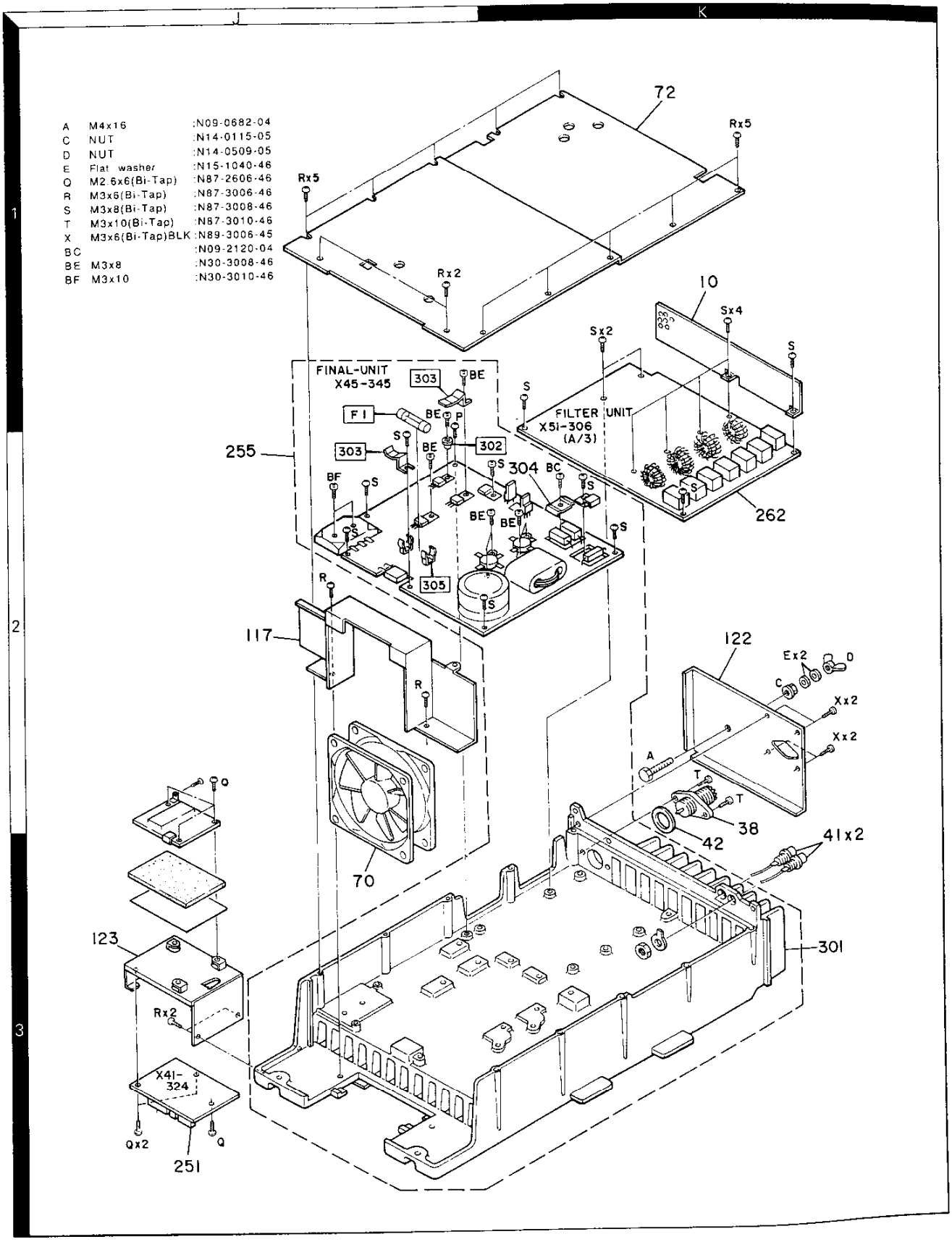

EXPLODED VIEW

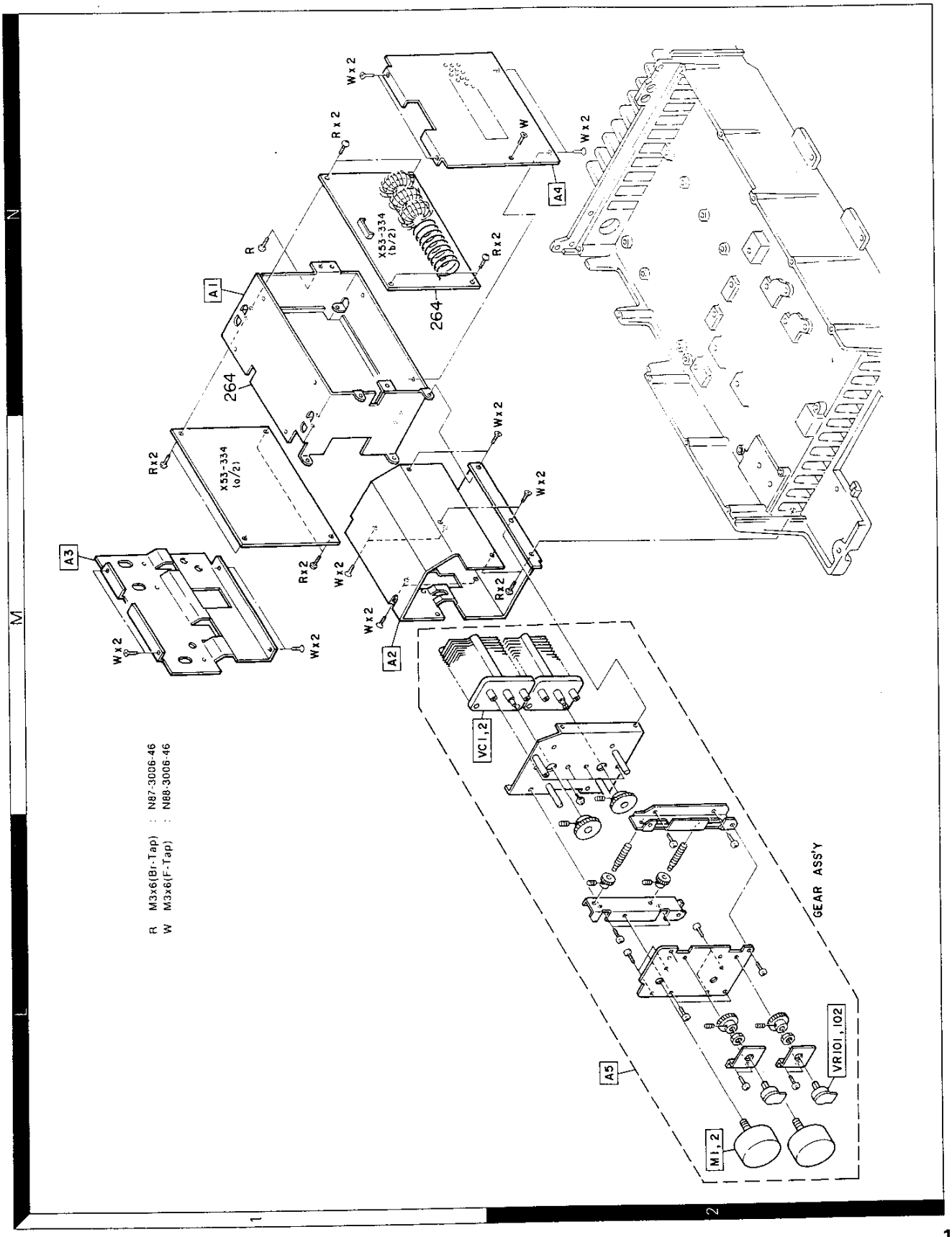

PACKING

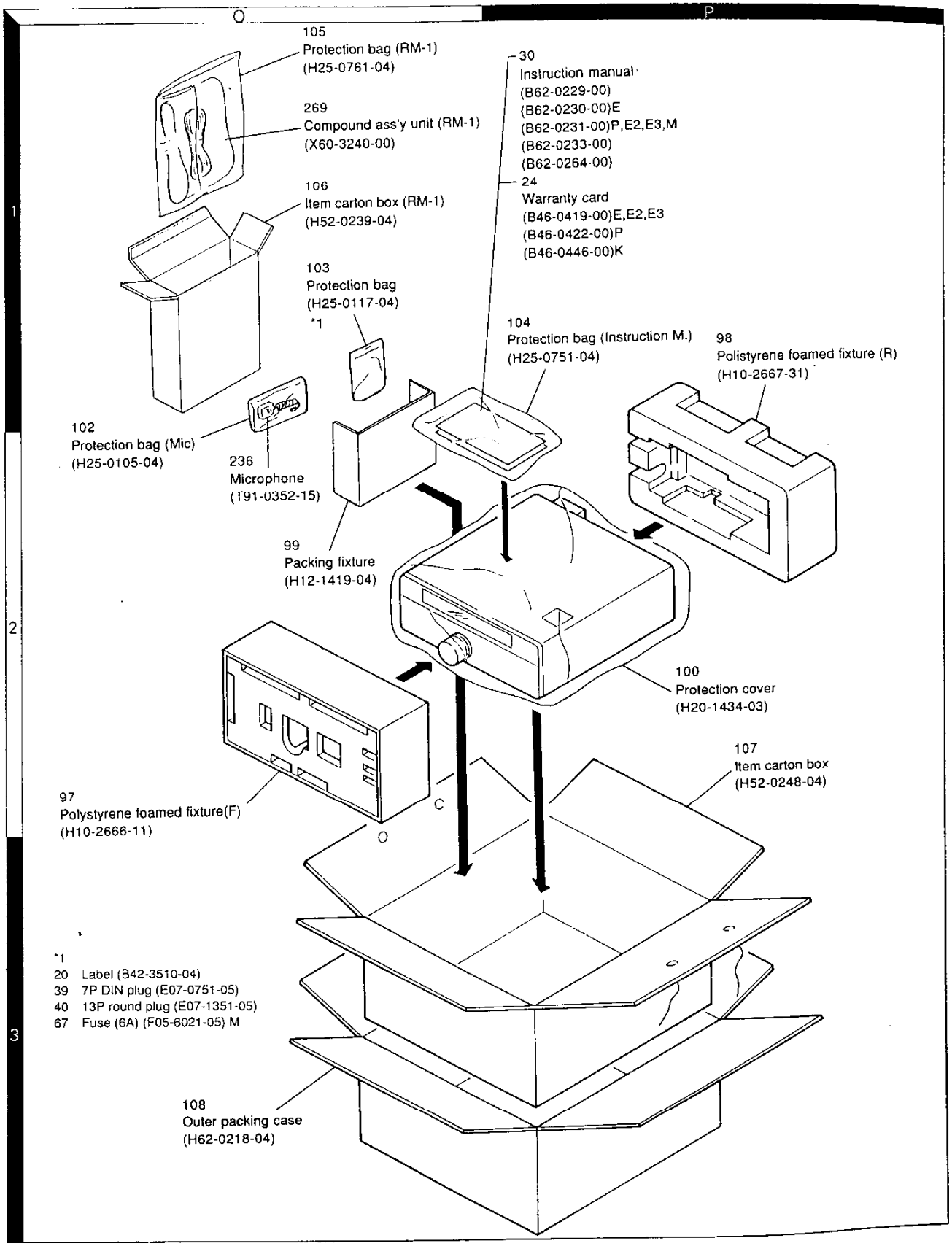
105
Protection bag (RM-1)
(H25-0761-04)
269
Compound ass'y unit (RM-1)
(X60-3240-00)
106
Item carton box (RM-1)
(H52-0239-04)
30
Instruction manual
(B62-0229-00)
(B62-0230-00)E
(B62-0231-00)P,E2,E3,M
(B62-0233-00)
(B62-0264-00)
24
Warranty card
(B46-0419-00)E,E2,E3
(B46-0422-00)P
(B46-0446-00)K
103
Protection bag
(H25-0117-04)
*1
104
Protection bag (Instruction M.)
(H25-0751-04)
98
Polistyrene foamed fixture (R)
(H10-2667-31)
102
Protection bag (Mic)
(H25-0105-04)
236
Microphone
(T91-0352-15)
99
Packing fixture
(H12-1419-04)
100
Protection cover
(H20-1434-03)
107
Item carton box
(H52-0248-04)
97
Polystyrene foamed fixture(F)
(H10-2666-11)
C
O
*1
20 Label (B42-3510-04)
39 7P DIN plug (E07-0751-05)
40 13P round plug (E07-1351-05)
67 Fuse (6A) (F05-6021-05) M
108
Outer packing case
(H62-0218-04)

ADJUSTMENT

Required Test Equipment

1. DC Voltmeter (DC V.M)
1) Input resistance : More than 1MΩ
2) Voltage range : 1.5 to 1000V AC/DC
Note : A high-precision multimeter may be used. However, accurate readings can not be obtained for high-impedance circuits.

2. DC Ammeter
1) Current range : 100mA, 1.5A, 15A, High-precision ammeter may be used.

3. RF VTVM (RF V.M)
1) Input impedance : 1MΩ and less than 3pF, min.
2) Voltage range : 10mV to 300V
3) Frequency range : 10kHz to 500MHz

4. AF Voltmeter (AF V.M)
1) Frequency range : 50Hz to 10kHz
2) Input resistance : 1MΩ or greater
3) Voltage range : 10mV to 30V

5. AF Generator (AG)
1) Frequency range : 200Hz to 5kHz
2) Output : 1mV or less to 1V, low distortion

6. AF Dummy Load
1) Impedance : 8Ω
2) Dissipation : 3W or greater

7. Oscilloscope
Requires high sensitivity, and external synchronization capability (150MHz or greater).

8. Sweep Generator
1) Center frequency : 50kHz to 90MHz
2) Frequency deviation : Maximum ±35MHz
3) Output voltage : 0.1V or greater
4) Sweep rate : At least 0.5 sec/cm

9. Standard Signal Generator (SSG)
1) Frequency range : 50kHz to 50MHz
2) Output : –20dB/0.1μV to 120dB/1V
3) Output impedance : 50Ω
4) AM and FM modulation can be possible.
Note : Generator must be frequency stable.

10. Frequency Counter (f. counter)
1) Minimum input voltage : 50mV
2) Frequency range : 150MHz or greater

11. Noise Generator
Must generate ignition noise containing harmonics beyond 30MHz

12. RF Dummy Load
1) Impedance : 150Ω and 50Ω
2) Dissipation : 150W or greater

13. Linear Detector
1) Frequency range : 30MHz

14. Power Meter
1) Impedance : 50Ω
2) Dissipation : 300W continuous or greater
3) Frequency limits : 60MHz or greater

15. Spectrum Analyzer
1) Frequency range : 100kHz to 110MHz or greater
2) Bandwidth : 1kHz to 3MHz

16. Detector
1) For adjustment of TX BPF

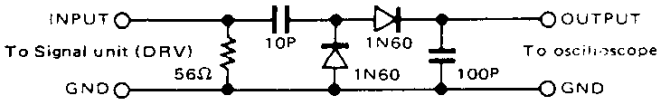

2) For adjustment of PLL/VCO BPF

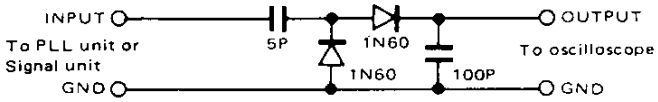

17. Directional Coupler

18. Monitor Receiver
R-1000 class

19. Microphone
MC-43S or MC-60/60S8

20. Tracking Generator

ADJUSTMENT

Preparation

- **Setting**

There should not comes out easily.
Push knob are all OFF.
Unless otherwise specified, set the controls as follows;

POWER	ON
ATT	0
AGC	FAST
METER	POWER
NB LEVEL	0
PROCESSOR IN	0
PROCESSOR OUT	0
MIC	0
PWR	MAX
NOTCH	Center
SQL	0
PITCH	Center
AF	0
RF	MAX
IF VBT	NORMAL
AF VBT	NORMAL
SSB SLOPE TUNE HIGH	MAX
SSB SLOPE TUNE LOW	MAX

Front Panel

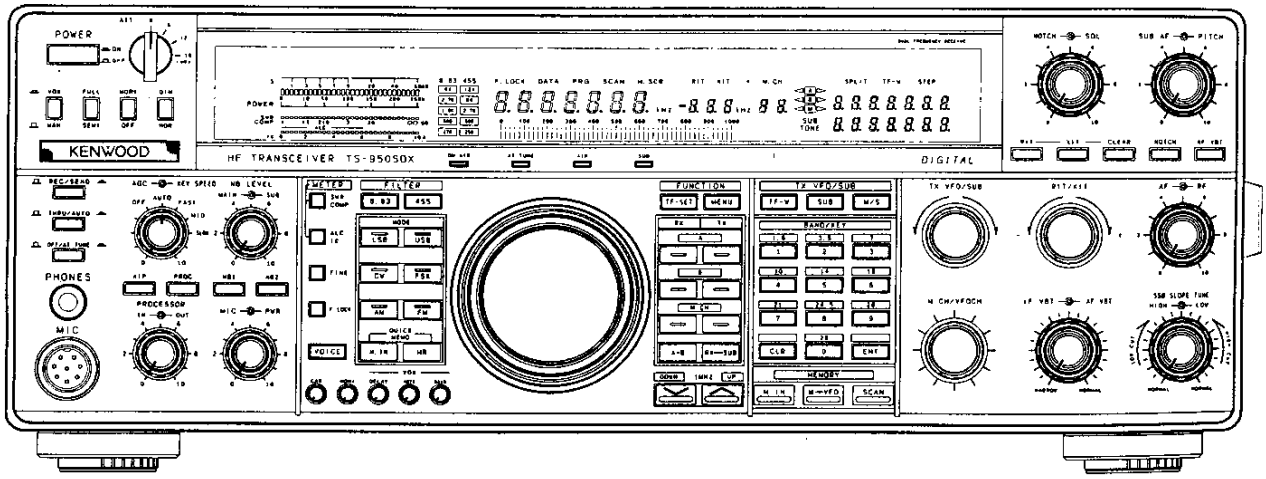

Rear Panel

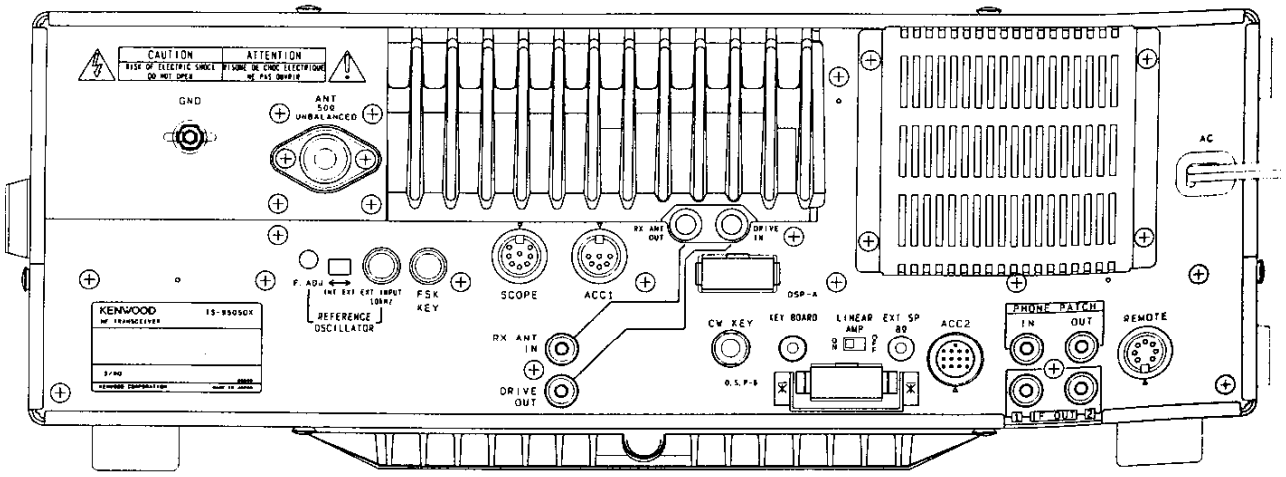

ADJUSTMENT

Item	Condition	Measurement			Adjustment			Specifications/Remarks
		Test-equipment	Unit	Terminal	Unit	Parts	Method	
1. Operation description	1) Setting of adjustment mode	The MENU No. display will be set to the adjustment mode when the power is turned on while pressing 3 and 9 keys. Display M. CH.						
	2) Selection of adjustment mode MENU No.	The MENU No. can be changed by turning M. CH/VFO CH.						
	3) Frequency setting in adjustment mode	The frequency can be changed by pressing M. CH and entering the memory CH with number keys. (ENT + Frequency + ENT)						
	4) Exiting adjustment mode	Pressing CLR returns to the display to the normal memory CH display.						
	5) Normal frequency setting	The memory CH (frequency) can be changed by turning M. CH/VFO CH.						
	6) Expression of frequency and mode setting. ** : Memory CH	• Adjustment mode Expressed in the form of "M. CH** pressing M. CH". • Normal Expression in the form of "M. CH".						
	7) Interruption of adjustment mode	In the case of turning off the power when in the adjustment mode, the power is to be turned off while pressing CLR. Pressing CLR causes data to be into ROM.						

2. Memory frequency table

Note : These frequencies will be written when the power is turned on while pressing 1 and 7 keys.

M. CH	Frequency	Mode	M. CH	Frequency	Mode	M. CH	Frequency	Mode	M. CH	Frequency	Mode	M. CH	Frequency	Mode
00	14.250.00	FM	20	10.000.00	CW	40	22.495.00	FSK	60	29.600.00	FM	80		
01	0.010.00	FSK	21	14.000.00	USB	41	29.510.00	FM	61	14.200.00	CW	81		
02	7.480.00	FSK	22	21.000.00	USB	42	12.095.00	USB	62	29.690.00	FM	82		
03	7.490.00	FSK	13	28.000.00	USB	43	14.095.00	USB	63	21.050.00	USB	83		
04	14.480.00	FSK	24	0.100.00	USB	44	28.080.00	FM	64	1.830.00	CW	84		
05	14.500.00	FSK	25	14.175.00	USB	45	14.200.00	USB	65	3.500.00	CW	85		
06	21.480.00	FSK	26	28.200.00	FM	46	7.050.00	CW	66	3.800.00	CW	86		
07	21.500.00	FSK	27	21.200.00	USB	47	14.050.00	CW	67	7.000.00	CW	87		
08	30.000.00	FSK	28	0.100.00	AM	48	29.000.00	CW	68	10.100.00	CW	88		
09	0.010.00	FM	29	1.495.00	AM	49	21.000.00	CW	69	14.000.00	CW	89		
10	7.500.00	FM	30	2.495.00	LSB	50	14.200.00	CW	70	18.100.00	CW	90		
11	7.480.00	FM	31	3.495.00	LSB	51	24.900.00	CW	71	21.000.00	CW	91		
12	14.500.00	FM	32	5.495.00	LSB	52	29.000.00	CW	72	24.900.00	CW	92		
13	14.480.00	FM	33	7.495.00	LSB	53	14.200.00	CW	73	29.600.00	CW	93		
14	21.500.00	FM	34	10.495.00	USB	54	1.830.00	CW	74	21.050.00	FM	94		
15	21.480.00	FM	35	12.495.00	USB	55	14.200.00	CW	75	1.850.00	USB	95		
16	30.000.00	FM	36	14.495.00	USB	56	29.050.00	CW	76	1.853.00	LSB	96		
17	14.000.00	USB	37	16.495.00	USB	57	1.830.00	CW	77			97		
18	3.500.00	LSB	38	19.495.00	USB	58	14.200.00	USB	78			98		
19	7.000.00	LSB	39	21.495.00	FSK	59	29.050.00	FM	79			99		

Checking

Item	Condition	Measurement			Adjustment			Specifications/Remarks
		Test-equipment	Unit	Terminal	Unit	Parts	Method	
1. Check of insulation resistance value	1) Pull out the AC plug from the receptacle. POWER : ON After checked POWER : OFF	Megohm-meter	Rear panel	AC plug				50MΩ or more.
2. Display check and reset	1) Connect the AC plug to the receptacle. POWER : ON After checked POWER : OFF While pushing the A=B key, POWER : ON				Display	Reset display M. DISP : 14.000.00kHz MODE : USB FUNCTION RX : A, TX : A VFO : A FILTER 8.83 : 2.7k FILTER 455 : 2.7k METER : SWR, ALC		Must display correctly. Must be no generation of smoke or abnormal noise. Should be at the reset frequency.
3. Voltage adjustment	1) After checked POWER : OFF	DC V.M	AVR (A/6)	TP1	AVR (A/6)	VR1	15.0V	±0.2V

ADJUSTMENT

Item	Condition	Measurement			Adjustment			Specifications/Remarks
		Test-equipment	Unit	Terminal	Unit	Parts	Method	
4. Initial setting Note : When if necessary CAR point adjustment, this adjustment do it.	1) Side panel (AVR) Voltage select switch : 220V **M** : 240V **X, T** Adjustment mode setting While pushing the 3 and 9 keys, POWER : ON MODE : LSB MENU : 01 MODE : USB MENU : 02				Front panel	TX VFO	Align by pressing the UP/DOWN key. When it is considerable out of alignment, changes can be made quickly by using the SUB encoder.	TX display 0.
5. PITCH	1) PITCH : Align at the center position after once turning all the way in the counter-clockwise derection. MENU : 03				Front panel		UP : Push	SUB display P.
6. IF VBT	1) IF VBT : NORMAL MENU : 06						UP : Push	SUB display b.
7. SLOPE TUNE	1) SLOPE TUNE HI,LOW : Right turn MAX MENU : 04						UP : Push	SUB display H.
	2) MENU : 06 After adjusted SLOPE TUNE LOW : NORMAL						UP : Push	SUB display L.
8. AGC SW	1) AGC : AUTO MENU : 07 After adjusted CLR : Push (Exit adjustment mode)						UP : Push	SUB display A.

PLL and CAR section adjustment

Item	Condition	Measurement			Adjustment			Specifications/Remarks
		Test-equipment	Unit	Terminal	Unit	Parts	Method	
1. Reference oscillation	1) Open the heat sink. CAR unit S2 : OSC	f. counter	PLL	TP1	CAR	TC1	20,000,000Hz	±20Hz
2. SCOPE S.MKR		Connector jig DC V.M	Rear panel	SCOPE Connector jig	Digital	VR1	0V	±0.01V
3. EXT STD voltage adjustment	1) CAR unit S1 : EXT Marker jig input : 10MHz EXT terminal : 10kHz After adjusted S1 : INT	DC V.M Marker jig	CAR Rear panel	TP7 EXT INPUT	CAR	TC2	2.5V	±0.2V
	2) CAR unit S1 : SO	f. counter	PLL	TP1			Check	20.000.00MHz±20Hz
4. VCO adjustment	1) VCO5 MODE : FM	DC V.M	CAR	TP1	CAR	L3	4.0V	±0.2V
	2) VCO4			TP3		L17	4.0V	±0.2V
	3) VCO9			TP4		L10	7.0V	±0.2V
	4) MODE : FSK						Check	1.0V or more.
	5) VCO6 MODE : USB			TP2	CAR	L24	4.0V	±0.2V
	6) 8.375MHz	Synchro-scope		TP5		L14	Level MAX	Reference value : 0.4Vp-p
	7) 10.695MHz			TP6		L21	Level MAX	Reference value : 0.4Vp-p
	8) 40MHz BPF		PLL	TP3	PLL	L35,36	Level MAX	Reference value : 1.1Vp-p

ADJUSTMENT

Item	Condition	Measurement			Adjustment			Specifications/Remarks
		Test-equipment	Unit	Terminal	Unit	Parts	Method	
	9) VCO8	DC V.M	PLL	TP2	PLL	L19	5.0V	±0.2V
	10) DDS CLK	Synchro-scope		TP10		L25,24	Level MAX	Reference value : 2.0Vp-p
5. 35.3MHz BPF adjustment	1) M. CH : 00 (14.250.00MHz)	Synchro-scope	PLL	TP4	PLL	L37~L39	Level MAX	Reference value : 0.4Vp-p
6. 50.750MHz OSC adjustment		Synchro-scope	PLL	TP9	PLL	L53	Level MAX	Reference value : 0.5Vp-p
		f. counter				TC1	50.750MHz	±50Hz
7. 12.54MHz BPF adjustment		Synchro-scope	PLL	TP5	PLL	L15~L17	Level MAX	Reference value : 0.1Vp-p
8. 38.21MHz BPF adjustment		Synchro-scope	PLL	TP6	PLL	L46~L48	Level MAX	Reference value : 0.1Vp-p
		f. counter					Check	20.97152MHz±20Hz
9. VCO7	1) M. CH : 01 (0.010.00MHz) MODE : FSK SUB : OFF	DC V.M	PLL	TP8	PLL (VCO)	TC4	2.8V	±0.2V
	2) M. CH : 02 (7.480.00MHz)						Check	7.5~11.0V
	3) M. CH : 03 (7.490.00MHz)			TP7	PLL (VCO)	TC3	2.8V	±0.2V
	4) M. CH : 04 (14.480.00MHz)						Check	7.5~11.0V
	5) M. CH : 05 (14.500.00MHz)				PLL (VCO)	TC2	2.8V	±0.2V
	6) M. CH : 06 (21.480.00MHz)						Check	7.5~11.0V
	7) M. CH : 07 (21.500.00MHz)				PLL (VCO)	TC1	2.8V	±0.2V
	8) M. CH : 08 (30.000.00MHz)						Check	7.5~11.0V
		When TC1 to TC4 are unable to be adjusted to 2.8V, any level of 3.0V or less is acceptable.						
10. VCO0		DC V.M	AF	TP2	AF (VCO2)	TC1	5.0V	±0.2V
11. VCO1	1) M. CH : 09 (0.010.00MHz) MODE : FM	DC V.M	AF	TP1	AF (VCO)	TC1	2.8V	±0.2V
	2) M. CH : 10 (7.500.00MHz)					TC2	2.8V	±0.2V
	3) M. CH : 11 (7.480.00MHz)						Check	7.5~11.0V
	4) M. CH : 12 (14.500.00MHz)				AF (VCO)	TC3	2.8V	±0.2V
	5) M. CH : 13 (14.480.00MHz)						Check	7.5~11.0V
	6) M. CH : 14 (21.500.00MHz)				AF (VCO)	TC4	2.8V	±0.2V
	7) M. CH : 15 (21.480.00MHz)						Check	7.5~11.0V
	8) M. CH : 16 (30.000.00MHz)							7.5~11.0V
		When TC1 to TC4 are unable to be adjusted to 2.8V, any level of 3.0V or less is acceptable.						

ADJUSTMENT

Receiver section adjustment

Item	Condition	Measurement			Adjustment			Specifications/Remarks
		Test-equipment	Unit	Terminal	Unit	Parts	Method	
1. AGC (MAIN)	1) M. CH : 24 (0.100.00MHz) MODE : USB RF GAIN : MAX	DC V.M	Signal	TP1	Signal	VR3	2.8V	±0.01V
(SUB)	2) SUB : ON IF unit VR2 : MIN After adjusted SUB : OFF IF unit VR2 : MAX		IF	CN19-2	IF	VR3	3.9V	±0.02V
2. MIX BAL (MAIN)	1) AF VR : MAX After adjusted AF VR : MIN	AF V.M	Rear panel	EXT. SP	RF	VR2	Noise level MIN	
(SUB)	2) SUB : ON SUB AF VR : MAX After adjusted SUB : OFF SUB AF VR : MIN					VR1		
3. BPF	1) M. CH : 18 (3.500.00MHz) AIP : OFF AGC : OFF Spectrum analyzer setting Center frequency : 3.5MHz Frequency span : 5MHz ATT : 10dB VBW, RBW : 10kHz SWP : 2s V. REF : 2dB/DIV	Spectrum analyzer Tracking generator	RF Rear panel	TP3 ANT	RF	L19~ L21	Repeat 5, 6 times.	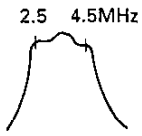
	2) M. CH : 19 (7.000.00MHz) Spectrum analyzer setting Center frequency : 7MHz					L25~ L27		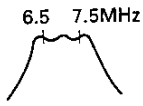
	3) M. CH : 20 (10.000.00MHz) Spectrum analyzer setting Center frequency : 10MHz					L31~ L33		
	4) M. CH : 21 (14.000.00MHz) Spectrum analyzer setting Center frequency : 14MHz Frequency span : 10MHz VBW, RBW : 100kHz SWP : 50ms					L37~ L39		
	5) M. CH : 22 (21.000.00MHz) Spectrum analyzer setting Center frequency : 21MHz					L46~ L48		
	6) M. CH : 23 (28.000.00MHz) Spectrum analyzer setting Center frequency : 28MHz Frequency span : 25MHz RBW : 300kHz					L52~ L54		
4. MCF (MAIN)	1) M. CH : 24 (0.100.00MHz) Tracking generator output : –30dBm Spectrum analyzer setting Center frequency : 73.050MHz Frequency span : 70kHz ATT : 10dB V. REF : 10dB/DIV	Spectrum analyzer Tracking generator	IF	TP3 CN6	IF	L9~ L11	Repeat 2~3 times. Adjust so that gain is maximum and band shown at right becomes flat.	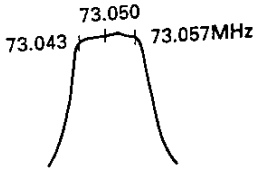

ADJUSTMENT

Item	Condition	Measurement			Adjustment			Specifications/Remarks
		Test-equipment	Unit	Terminal	Unit	Parts	Method	
(SUB)	2) Tracking generator output : -30dBm Spectrum analyzer setting Center frequency : 40.055MHz Frequency span : 60kHz	Spectrum analyzer Tracking generator	IF RF	TP1 TP4	IF RF	L1 L77~ L80	Repeat 2~3 times. Adjust so that gain is maximum and band shown at right becomes flat.	40.055 40.049 40.061MHz 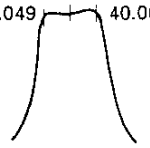
5. RX IF AMP (MAIN)	1) M. CH : 25 (14.175.00MHz) MODE : USB AGC : OFF AIP : OFF SUB AF : MIN AF VR : 0.63V/8Ω SSG f. : 14.176MHz SSG ATT : 0.5~0.155μV (-113~-123dBm)	SSG DM. SP Oscilloscope AF V.M	Rear panel	ANT EXT. SP	RF IF Signal	L87 L12~ L17 L20,30 L2,4 L5,7	Repeat 2 times for MAX AF output reading. Finally readjust L15 and L16.	Note : Adjustments are to be made with as small an input as possible.
	2) FILTER 8.83 SW : Set to the position where the display disappears. After adjusted FILTER 8.83 SW : Push 2 times				IF	L28,29	AF output MAX	
(SUB)	3) SUB : ON RX⟷SUB : Push AF VR : MIN SUB AF : 0.63V/8Ω AF unit VR1 : Center IF unit VR2 : Center SSG f. : 14.176MHz SSG ATT : 0.5~0.155μV (-113~-123dBm) After adjusted SUB : OFF SUB AF VR : MIN				RF IF	L77 L1~ L8	Repeat 2 times for MAX AF output reading.	Note : Adjustments are to be made with as small an input as possible.
6. IF OUT 1	1) SSG ATT : 80dBμ AGC : OFF	SSG Synchro-scope	Rear panel	ANT IF OUT 1	IF	L18,19	Adjust 8.83MHz signal to MAX level.	
7. NOTCH (USB)	1) M. DISP : 14.175MHz MODE : USB NOTCH VR : Center SSG f. : 14.1765MHz SSG ATT : 50μV (-73dBm)	SSG DM. SP Oscilloscope AF V.M f. counter	Rear panel	ANT EXT. SP	Front panel	AF VR	Adjust to 1500Hz/ 0.63V/8Ω AF output.	
	2) NOTCH SW : ON After adjusted NOTCH SW : OFF				Signal Front panel	L6 VR2 NOTCH VR	AF output MIN. Repeat for MIN AF output reading.	
(LSB)	3) MODE : LSB SSG f. : 14.1735MHz							
	4) NOTCH SW : ON After adjusted NOTCH SW : OFF Signal unit L6 : Paraffin lock				Signal Front panel	VR301 NOTCH VR	Repeat for MIN AF output reading.	
8. S-meter (MAIN)	1) SUB : ON POWER : OFF Adjustment mode setting While pushing the 3 and 9 keys, POWER : ON MENU : 08 AGC : FAST SSG f. : 14.176MHz SSG ATT : 1μV (-107dBm)				Signal Front panel	VR1	Align TX display.	40 SUB diaplay 0.

ADJUSTMENT

Item	Condition	Measurement			Adjustment			Specifications/Remarks
		Test-equipment	Unit	Terminal	Unit	Parts	Method	
(SUB)	2) SSG ATT : 0.82μV (–108dBm)	SSG	Rear panel	ANT	Front panel		UP : Push	SUB display 1.
	3) SSG ATT : 5dBμ (–93dBm)						UP : Push	SUB display 2.
	4) SSG ATT : 280μV (–58dBm)						UP : Push	SUB display 3.
	5) SSG ATT : 20mV (–21dBm)	DM. SP		EXT. SP			UP : Push	SUB display End.
	6) SSG ATT : 1μV (–107dBm) MENU : 15 RX⟷SUB : Push RX-A : Push	Oscilloscope AF V.M f. counter			IF Front panel	VR2	Align TX display.	190 SUB display 0.
	7) SSG ATT : 0.82μV (–108dBm)				Front panel		UP : Push	SUB display 1.
	8) SSG ATT : 20μV (–81dBm)						UP : Push	SUB display 2.
	9) SSG ATT : 13mV (–25dBm)						UP : Push	SUB display End.
9. Carrier point (MAIN)	1) SSG RF : OFF AF VR : MAX SUB AF VR : MIN MENU : 00 MODE : USB/LSB						Pressing the key UP or DOWN each other so that align the tone of USB and LSB noise.	UP side : Low cut DOWN side : High cut Align to (–) shift at the LSB which shift to (+) at the USB so that become same operation for IF SHIFT. Same way as against before.
(SUB)	2) AF VR : MIN SUB AF VR : MAX MENU : 02 MODE : USB/LSB After adjusted CLR : Push (Exit adjustment mode) SUB : OFF						Align the noise tone of USB and LSB by pressing the UP/DOWN key.	SUB : Works as IF SHIFT. When it is considerable out of alignment, changes can be made quickly by using the SUB encoder.
10. ATT	1) M. CH : 25 (14.1775.00MHz) MODE : USB SSG ATT : 158μV (–63dBm) ATT SW : 0dB	SSG DM. SP Oscilloscope AF V.M	Rear panel	ANT EXT. SP	Front panel	ATT SW	The S-meter indicate decrease step by 6dB.	SSG ATT : Within ±3dB S9+18dB
	2) ATT SW : 6dB							S9+12dB
	3) ATT SW : 12dB							S9+6dB
	4) ATT SW : 18dB							S9
	5) ATT SW : 0dB							
11. FM GAIN	1) M. CH : 26 (28.200.00MHz) MODE : FM Signal unit VR10 : Center FILTER 455 : 12K SSG f. : 28.200MHz MOD : 1kHz DEV : 3kHz ATT : 50μV (–73dBm)				Signal	L28	AF output MAX	
	2) SSG DEV : 3kHz				Front panel	AF VR	Align the AF output 0.63V/8Ω.	
	3) SSG DEV : 5kHz				Signal	VR10		
	4) SSG DEV : 3kHz POWER : OFF						Check	AF output : 0.45V/8Ω or more
12. FM S-meter	1) SSG f. : 28.200MHz MOD : 1kHz DEV : 3kHz ATT : 0.56μV (–112dBm) Adjustment mode setting While pushing the 3 and 9 keys, POWER : ON MENU : 08				Front panel			SUB display 0.
							UP : Push	SUB display 1.
	2) SSG ATT : 1.6μV (–103dBm)						UP : Push	SUB display 2.
	3) SSG ATT : 2.8μV (–98dBm)						UP : Push	SUB display 3.
	4) SSG ATT : 16μV (–83dBm) After adjusted CLR : Push (Exit adjustment mode)						UP : Push	SUB display End.

ADJUSTMENT

Item	Condition	Measurement			Adjustment			Specifications/Remarks
		Test-equipment	Unit	Terminal	Unit	Parts	Method	
13. NB (MAIN)	1) M. CH : 27 (21.200.00MHz) MODE : USB AF VR : Arbitrary SUB AF VR : MIN SUB NB VR : MIN NB1 SW : ON MAIN NB VR : 12 o'clock	Noise generator Speaker	Rear panel	ANT EXT. SP			Adjust the noise generator so that the 1st to 3rd marks on the S-meter liight. Adjust NB LEVEL MAIN and align at the point just prior to where NB effects are no longer present.	
					AF	L13,14	Noise level MIN.	
	2) SUB : ON SUB AF VR : Arbitrary MAIN AF VR : MIN SUB NB VR : MIN MAIN NB VR : 12 o'clock NB1 SW : ON NB2 SW : ON						Adjust output of noise generator to small input (S1) and large input (S9) and check each.	Noise should disappear. When there are no effects at the 12 o'clock, noise should disappear when the SUB VR is turned to the 3 o'clock.
(SUB)	3) MAIN AF VR : MIN MAIN NB VR : MIN NB1 SW : ON NB2 SW : OFF SUB NB VR : 12 o'clock SUB AF VR : Arbitrary						Adjust the noise generator so that the 1st to 3rd marks on the S-meter liight. Adjust NB LEVEL SUB and align at the point just prior to where NB effects are no longer present.	
					IF	L21,22	Noise level MIN.	
	4) MAIN AF VR : Arbitrary SUB AF VR : MIN MAIN NB VR : MIN SUB NB VR : 12 o'clock NB1 SW : ON NB2 SW : ON After adjusted SUB : OFF NB1, NB2 SW : OFF Disconnect the NB jig						Adjust output of noise generator to small input (S1) and large input (S9) and check each.	Noise should disappear. When there are no effects at the 12 o'clock, noise should disappear when the SUB VR is turned to the 3 o'clock.
14. Beep tone adjustment	1) AF VR : MIN MODE : Push MODE : CW	DM. SP oscilloscope	Rear panel	EXT. SP	Control	VR1	0.3Vp-p	0.2~0.4Vp-p
15. VOICE check	1) POWER : OFF Connect the VOICE jig to the option connector. POWER : ON AF VR : Arbitrary After checked POWER : OFF Disconnect the VOICE jig. POWER : ON						Check	When the VOICE key on the front panel pushed once, the displayed frequency can be heard vocally.
16. Noise check when power turned on	1) M. CH : 42 (12.095.00MHz) MODE : USB AF VR : 0.63V/8Ω SSG f. : 12.096MHz SSG ATT : 500μV (–53dBm)	SSG DM. SP Oscilloscope AF V.M	Rear panel	ANT EXT. SP			Check the AF sound immediately after turning the switch ON after the power has been turned OFF for 2~3 seconds following setting of conditions.	There is to be no generation of abnormal sounds at this time.

ADJUSTMENT

Item	Condition	Measurement			Adjustment			Specifications/Remarks
		Test-equipment	Unit	Terminal	Unit	Parts	Method	
17. SSB squelch	1) M. CH : 43 (14.095.00MHz) MODE : USB AF VR : Center SSG RF : OFF	SSG DM. SP Oscilloscope AF V.M	Rear panel	ANT EXT. SP			Adjust the SQL VR is slowly increase noise just goes off.	Knob position 8 : 00~12 : 00
	2) SSG RF : ON SSG ATT : 0.35μV (–116dBm)						Check	Squelch should open.
	3) SQL VR : MAX SSG ATT : 1.6μV (–103dBm)							Squelch should open.
18. FM squelch	1) M. CH : 44 (29.080.00MHz) MODE : FM FILTER 455 : 12K SSG RF : OFF						Adjust the SQL VR is slowly increase noise just goes off.	Knob position 8 : 00~12 : 00
	2) SSG f. : 28.080MHz MOD : 1kHz DEV : 3kHz ATT : 0.32μV (–117dBm) SSG RF : ON						Check	Squelch should open.
	3) SQL VR : MAX SSG ATT : 2.2μV (–100dBm) After checked AF VR : MIN SQL VR : MIN POWER : OFF							Squelch should open.
19. Option filter terminal check	1) Option installed model only Option setting While pushing the ENTER key, POWER : ON SSG ATT : 500μV (–53dBm) MENU : 01 and UP : Push MENU : 03 and UP : Push MENU : 04 and UP : Push M. DISP : 28.080MHz MODE : USB						Receive signal. Switch over the FILTER 8.83 in order. 6K→2.7K→1.8K Switch over the FILTER 455 in order. 6K→2.7K	It should now be possible to receive signals.
	2) MODE : CW After checked CLR : Push						Receive signal. Switch over the FILTER 8.83 in order. 2.7K→1.8K→500 Switch over the FILTER 455 in order. 2.7K→500→250	It should now be possible to receive signals.
	3) SUB : ON SSG ATT : 1.6μV (–103dBm) M/S : Push After checked POWER : OFF While pushing the RX-A key, POWER : ON POWER : OFF						Receive signal. Switch over the FILTER 455 in order. 2.7K→500	It should now be possible to receive signals.

ADJUSTMENT

Transmitter section adjustment

Item	Condition	Measurement			Adjustment			Specifications/Remarks
		Test-equipment	Unit	Terminal	Unit	Parts	Method	
1. ALC voltage	1) DSP jig connect. POWER : ON M. CH : 45 (14.200.00MHz) MODE : USB PWR VR : MAX STBY : SEND	Digital voltmeter	IF	CN3-1	Control	VR2	2.7V	±0.05V
2. D CAR	1) Signal unit VR7 and VR8 : 3 o'clock							
3. TX IF AMP	1) M. CH : 46 (7.050.00MHz) CAR VR : MAX MODE : CW FULL : ON IF unit CN4 : Pull out Spectrum analyzer setting Center frequency : 73MHz Frequency span : 1MHz STBY : SEND	Spectrum analyzer	IF	CN4	IF	L23~ L27 L31	73MHz signal level MAX.	Approx. 0dBm or more.
4. 64.2MHz spurious	1) Spectrum analyzer setting Center frequency : 64.2MHz STBY : SEND After adjusted IF unit CN4 : Install				IF	VR4	64.2MHz spurious level MIN.	
5. 8.83MHz MCF	1) CAR VR : MIN Spectrum analyzer setting Center frequency : 8.83MHz Frequency span : 25kHz V. REF : 2dB/DIV STBY : SEND	Tracking generator Spectrum analyzer (Probe)	IF	CN17-1 TP4	IF	L300 L301		8.83MHz 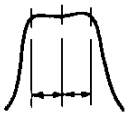 ±2.5kHz
6. TX IFT	1) RF unit VR4~6 : Center CAR VR : Center Spectrum analyzer setting Center frequency : 7.05MHz Frequency span : 1MHz STBY : SEND	Spectrum analyzer	Rear panel	DRIVE OUT	RF	L93~ L95	Repeat 2~3 times for MAX.	
7. MIX BIAS	1) STBY : SEND					VR4	MAX	
	2) M. CH : 47 (14.050.00MHz) MODE : CW STBY : SEND					VR5	MAX	
	3) M. CH : 48 (29.000.00MHz) MODE : CW STBY : SEND					VR6	MAX	
	4) M. CH : 54 (1.830.00MHz) MODE : CW STBY : SEND					L95	MAX	
8. MIX BAL	1) M. CH : 49 (21.000.00MHz) MODE : CW STBY : SEND After adjusted DRIVE OUT cable pull out.					VR3	Near 31MHz spurious level MIN.	
9. FINAL Vcc	1) Heat sink open. Final unit VR1, VR4, VR5 : CCW MODE : CW STBY : SEND	DC V.M	Final	F1 fuse terminal	Final	VR3	48.0V	±0.5V
(DRIVE Id)	2) MODE : USB STBY : SEND			TP1		VR1	100mV	95~105mV
(FINAL Id)				TP2		VR4	50mV	
						VR5	100mV	±10mV

ADJUSTMENT

Item	Condition	Measurement			Adjustment			Specifications/Remarks
		Test-equipment	Unit	Terminal	Unit	Parts	Method	
10. NULL	1) Control unit VR3 : Center VR4 : MAX VR6 : MAX Connet DRV OUT and FINAL IN of the rear panel. CAR VR : MIN M. CH : 50 (14.200.00MHz) MODE : CW STBY : SEND	Power meter	Rear	ANT	Front panel	CAR VR	Approx. 10W	
		DC V.M	Filter	CN6-1	Filter	TC1	MIN	0V
11. Ic meter	1) METER Ic : ON CAR VR : MIN POWER : OFF Adjustment mode setting While pushing the 3 and 9 keys, POWER : ON MENU : 14 STBY : SEND	DC V.M	Final	TP2	Front panel	CAR VR	0.4V	
							UP : Push 2 times	Check beep tone 2 times. SUB display End.
12. IC protection	1) CAR VR : MIN Control unit VR7 : MIN VR6 : MAX VR3 : MIN VR4 : MAX STBY : SEND Increase the CAR VR gradually to 200W.	Power meter	Rear panel	ANT	Control	VR7	190W	
						VR3	185W	When unable to align to 185W. aligning to a level that a little less than 190W is acceptable. Note : The CAR VR is to be turned gradually when in the unprotected state.
13. Power meter	1) M. CH : 50 (14.000.00MHz) MODE : CW PWR VR : MAX CAR VR : MIN MENU : 09				Front panel		Check	150
(Deflection start)	2) MENU : 10 STBY : SEND					CAR VR	Set the value on the TX display to +1. UP : Push	SUB display 0. Beep tone check. SUB display 1.
(10W)	3)						20W UP : Push	Beep tone check. SUB display 2.
(40W)	4)						50W UP : Push	Beep tone check. SUB display 3.
(150W)	5)						160W UP : Push	Beep tone check. SUB display End.
14. ALC adjustment	1) CAR VR : MIN Control unit VR6 : MAX STBY : SEND				Front panel	CAR VR	Turn the CAR VR to gradually increase the power and adjust after it reaches the maximum level.	
					Control	VR7	180W	175~185W
						VR6	150W	140~160W
15. ALC frequency response	1) M. CH : 52 (29.000.00MHz) MODE : CW STBY : SEND				Filter	VR1	150W	140~160W
	2) M. CH : 53 (14.200.00MHz) MODE : CW STBY : SEND						Check	140~160W When unable to be set within the range, ALC and frequency response are to be adjusted.

ADJUSTMENT

Item	Condition	Measurement			Adjustment			Specifications/Remarks
		Test-equipment	Unit	Terminal	Unit	Parts	Method	
16. PROC AMP	1) M. DISP : 14.200.00MHz MODE : LSB PROC SW : ON METER COMP : ON PROC OUT VR : MAX MIC terminal : 2-tone jig (1kHz/5mV, 3.4kHz/5mV) Connect OSC to MIC-1, 2 of the jig. STBY : SEND After adjusted PROC SW : OFF	Oscilloscope	Rear panel	ANT	Front panel	PROC IN VR	Adjust the PROC IN VR to a level at which there is no deflection of either the COMP meter and ALC meter.	
					Signal	L24,25	waveform MAX.	
17. SSB TX S/N check	1) MODE : USB/LSB MIC VR : MIN CAR VR : MAX PWR VR : MAX STBY : SEND	Power meter Directional coupler Spectrum analyzer Oscilloscope	Rear panel	ANT			Check	Both USB and LSB are to be at 45dB or less.
18. SWR protection	1) MODE : CW Control unit VR4 : MIN ANT : Connect the through line powe meter and 150Ω dummy load. STBY : SEND	Through line power meter 150Ω dummy load	Rear panel	ANT	Control	VR4	60W Note : Adjust quickly	±1W
19. SWR meter	1) MENU : 11 M. CH : 54 (1.830.00MHz) MODE : CW METER SWR : Push PWR VR : MAX CAR VR : MAX STBY : SEND				Front panel		UP : Push 2 times	Beep tone check 2 times. SUB display End.
20. MIN power setting	1) M. CH : 55 (14.200.00MHz) MODE : CW PWR VR : MIN CAR VR : MAX ANT : Connect the power meter STBY : SEND After adjusted PWR VR : MAX	Power meter	Rear panel	ANT	Control	VR5	12W	10~14W
21. 50W power setting	1) M. CH : 56 (29.050.00MHz) : 57 (1.830.00MHz) **E2** MODE : CW PWR VR : MAX Control unit S1 : 50W side STBY : SEND After adjusted S1 : 100W side					VR8	55W 12W **E2**	50~60W 10~15W **E2**
22. ALC meter (Zero)	1) M. CH : 58 (14.200.00MHz) MODE : USB MIC terminal : AG (1kHz/5mV) MENU : 13 STBY : SEND	DC V.M AG AF V.M	IF Front panel	CN3-1 MIC	Front	MIC VR	Set the value on the TX display to +8~12.	SUB display 0.
(Deflection start)							UP : Push	Beep tone check. SUB display 1.
(Zone MAX)	2) MIC terminal : AG (6dB up) (1kHz/10mV) STBY : SEND	Power meter	Rear panel	ANT			UP : Push	Beep tone check. SUB display 2.
(Full)	3) MIC terminal : AG (12dB up) (1kHz/20mV) STBY : SEND						UP : Push	Beep tone check. SUB display End.

ADJUSTMENT

Item	Condition	Measurement			Adjustment			Specifications/Remarks
		Test-equipment	Unit	Terminal	Unit	Parts	Method	
23. PROC meter (Deflection start)	1) METER COMP : Push PROC SW : ON PROC IN VR : MIN PROC OUT VR : 9 o'clock MIC terminal : AG (1kHz/1mV) MENU : 12 STBY : SEND	Power meter AG AF V.M	Rear panel Front panel	ANT MIC	Front panel	PROC IN VR	Set the value on the TX display to 30.	SUB display 0.
							UP : Push Adjust the PROC OUT VR to a level at which there is no deflection of either the COMP meter and ALC meter.	Beep tone check. SUB display 1.
(20dB)	2) MIC terminal : AG (20dB up) (1kHz/10mV) STBY : SEND After adjusted PROC SW : OFF (Exit adjustment mode)						UP : Push	Beep tone check. SUB display End.
							CLR : Push	Beep tone check.
24. FM MIC AMP	1) M. CH : 59 (29.050.00MHz) MODE : FM FILTER 455 : 12kHz MIC terminal : AG (1kHz/30mV) : **E,E2,X,T** (1kHz/50mV) : **K,P,E3,M** STBY : SEND	Power meter Directional coupler Linear detector AG AF V.M	Rear panel Front panel	ANT MIC	AF	VR5	DEV : ±4.6kHz	±0.1kHz
(Narrow FM)	2) MIC terminal : AG (20dB down) (1kHz/3mV) : **E,E2,X,T** (1kHz/5mV) : **K,P,E3,M** STBY : SEND					VR6	DEV : ±3.0kHz	±0.1kHz
	3) FILTER 455 : 6kHz MIC terminal AG (1kHz/30mV) : **E,E2,X,T** (1kHz/50mV) : **K,P,E3,M** STBY : SEND					VR4	DEV : ±2.3kHz	±0.1kHz
	4) MIC terminal : AG (20dB down) (1kHz/3mV) : **E,E2,X,T** (1kHz/5mV) : **K,P,E3,M** STBY : SEND						DEV check	±1.4kHz~±1.6kHz
25. SUB TONE	1) M. CH : 60 (29.600.00MHz) MODE : FM MIC terminal : Open STBY : SEND						Sub tone display check.	
					AF	VR3	DEV : ±700Hz	±50Hz
26. GAIN (GAIN 1)	1) M. CH : 61 (14.200.00MHz) MODE : CW METER ALC : ON IF unit VR5 : Center STBY : SEND	Power meter	Rear panel	ANT	Front panel	CAR VR	Reduce the power to 10W with the CAR VR.	Note : Reduce the CAR VR if there is deflection of the ALC meter during adjustment.
					Signal	L22	Power MAX.	
(GAIN 2)	2) POWER : OFF Adjustment mode setting While pushing the 3 and 9 keys, POWER : ON MODE : USB MENU : 16 STBY : SEND After adjusted CLR : Push POWER : OFF POWER : ON				Front panel		UP : Push Check the switch-over of the SUB frequency display.	OFF→ON
					Signal	VR8	ALC meter full scale.	
(FM GAIN)	3) M. CH : 62 (29.690.00MHz) MODE : FM STBY : SEND					VR7	ALC meter full scale.	

ADJUSTMENT

Item	Condition	Measurement			Adjustment			Specifications/Remarks
		Test-equipment	Unit	Terminal	Unit	Parts	Method	
27. Monitor level	1) M. CH : 63 (21.050.00MHz) MODE : USB MONI SW : ON MONI VR : 12 o'clock ALC SW : ON MIC terminal : AG (1kHz/10mV) MIC VR : ALC zone MAX STBY : SEND	Power meter DM. SP Oscilloscope AF V.M	Rear panel	ANT EXT. SP	IF	VR1	Set to mechanical center position.	
							Check	0.2~0.8V/8Ω
28. CW side tone	1) MODE : CW MONI SW : OFF PITCH VR : 12 o'clock VOX SW : ON Rear panel LINEAR AMP : ON	Power meter f. counter Electronic keyer jig	Rear panel	ANT CW KEY REMOTE FSK KEY	AF	VR2	KEY-S key down : 0.2V/8Ω	±0.02V
29. CW break-in	1) SEMI/FULL : SEMI DELAY : Center						KEY-S : Key down	Operate semi breake-in.
	2) SEMI/FULL : FULL						KEY-S : Key down	Operate full brake-in.
30. Electronic keyer	1) MENU : Push MENU : 12 UP : Push	AF V.M EXT. SP		EXT. SP			KEY-S : Key down (dot) (dot) KEY-L : Key down (dash)	Operate electronic keyer.
	2) KEY SPEED VR : Variable						KEY-S : Key down	Keying speed should change.
	3) MODE : FSK PROC OUT : MAX MONI SW : ON Jig RTTY SW : Push After checked POWER : OFF						Check	The frequency is to be made to be higher than the transmission frequency during transmission with REC/SEND switch.
31. DRU-2 check	1) 3 connectors of DRU-2 connect. MIC, paddle connect. POWER : ON VOX : OFF MODE : USB	RM-1 Monitor Power meter			RM-1 operation PLAY/REC : REC REC-1 : Push Speaker while pressing REC-1. Release REC-1. PLAY/REC : PLAY PLAY-1 : Push			Set to the record ready state. The contents of the recording will be able to be head from speaker.
	2) VOX : ON MIC GAIN adjust				RM-1 operation PLAY-1 : Push			The contents of the recording transmit.
	3) MODE : CW FULL/SEMI : FULL MENU : Push				RM-1 operation PLAY/REC : REC REC-1 : Push Enter the CW message with the paddle. RM-1 operation CLR : Push PLAY/REC : PLAY PLAY-1 : Push			CW message transmit.
	4) VOX : OFF After checked MENU : Push MENU : 12 DOWN : Push POWER : OFF DRU-2 remove Rear panel LINEAR AMP : OFF Pull out the connectors from REMOTE, FSK KEY and CW KEY. Front panel MONI SW : OFF SEMI/FULL : SEMI				RM-1 operation PLAY-1 : Push			The CW message will be able to be displayed on the monitor.

ADJUSTMENT

Adjustment Points (Upper Side)

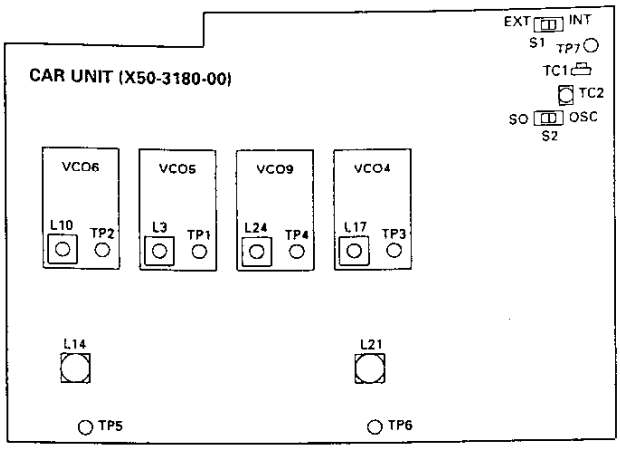

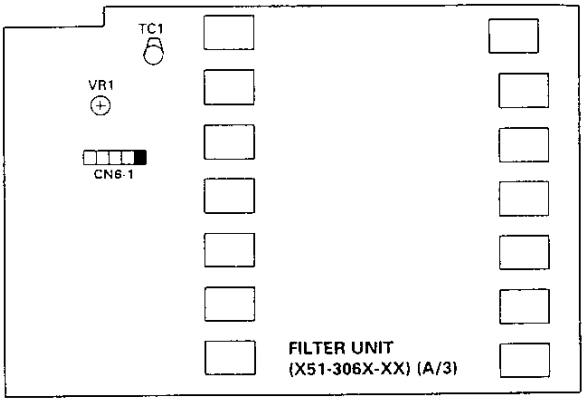

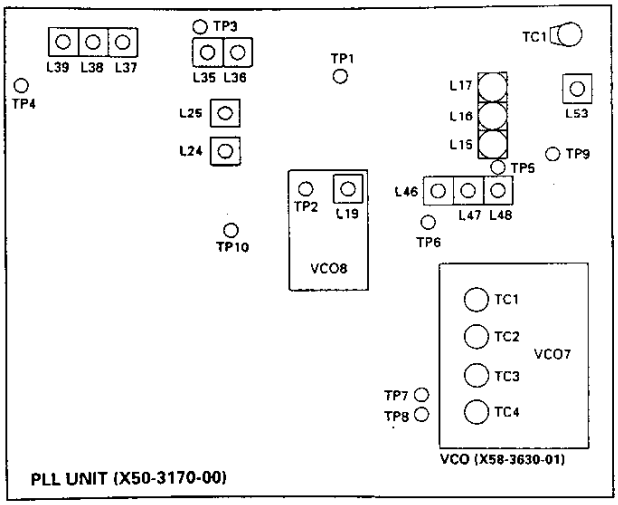

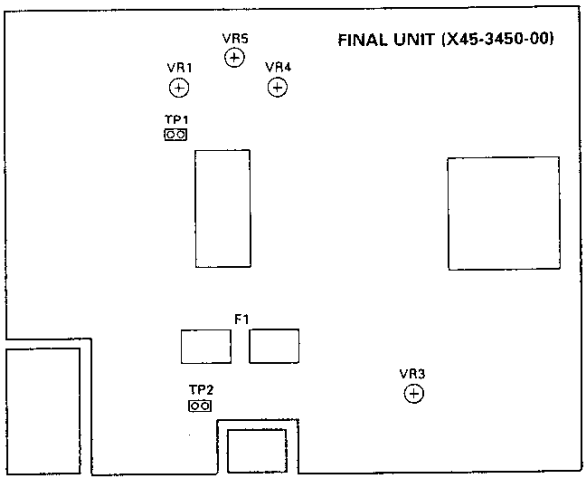

CAR UNIT (X50-3180-00)
TC1 : Reference oscillation
TC2 : EXT STD voltage
L3 : VCO5
L10 : VCO9
L14 : 8.375MHz
L17 : VCO4
L21 : 10.695MHz
L24 : VCO6

PLL UNIT (X50-3170-00)
L15~17 : 12.54MHz BPF
L19 : VCO8
L24, 25 : VCO
L35, 36 : 40MHz BPF
L37~39 : 35.3MHz BPF
L46~48 : 38.21MHz BPF
L53 : 50.750MHz OSC
TC1 : 50.750MHz OSC

VCO (X58-3630-01)
TC1~4 : VCO7

CONTROL UNIT (X53-3380-00)
VR1 : Beep tone
VR2 : ALC voltage
VR3, 7 : IC protection
VR4 : SWR protection
VR5 : MIN power setting
VR6, 7 : ALC

DIGITAL UNIT (X46-313X-XX)
VR1 : SCOPE S.MKR

FILTER UNIT (X51-306X-XX) (A/3)
TC1 : NULL
VR1 : ALC frequency response

FINAL UNIT (X45-3450-00)
VR1 : DRIVE Id
VR3 : FINAL Vcc
VR4, 5 : FINAL Id

RF UNIT (X44-3140-00)
VR1 : SUB MIX BAL
VR2 : MAIN MIX BAL
VR3 : MIX BAL
VR4~6 : MIX BIAS
L19~21 : 2.5~4.5MHz BPF
L25~27 : 6.5~7.5MHz BPF
L31~33 : 9.5~11.0MHz BPF
L37~39 : 13.5~15.0MHz BPF
L46~48 : 20.5~22.0MHz BPF
L52~54 : 23~30.5MHz BPF
L77 : SUB RX IF AMP
L77~80 : SUB MCF
L87 : MAIN RX IF AMP
L93~95 : TX IFT

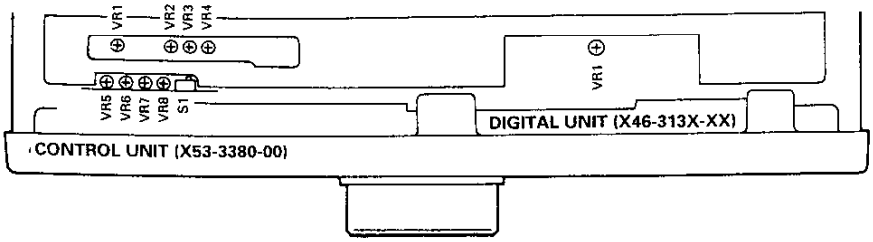

ADJUSTMENT

Adjustment points (Lower Side)

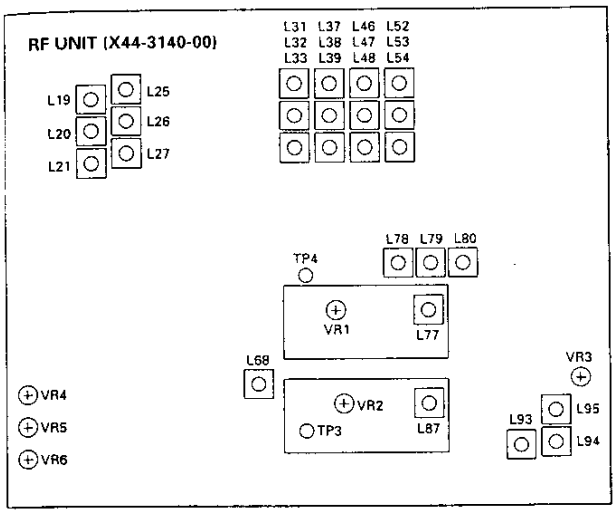

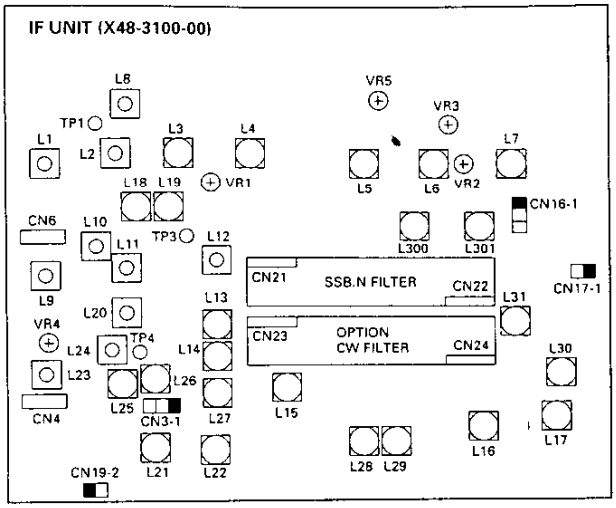

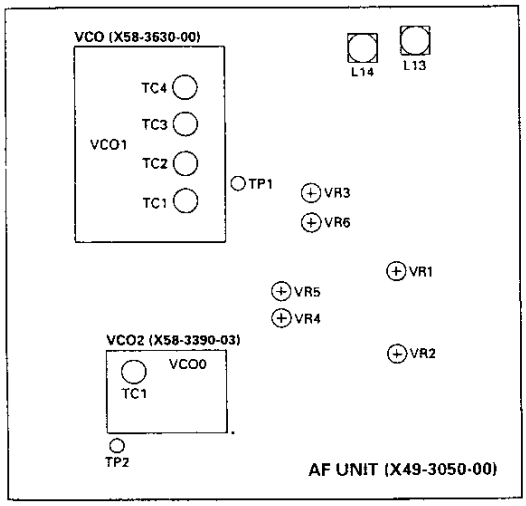

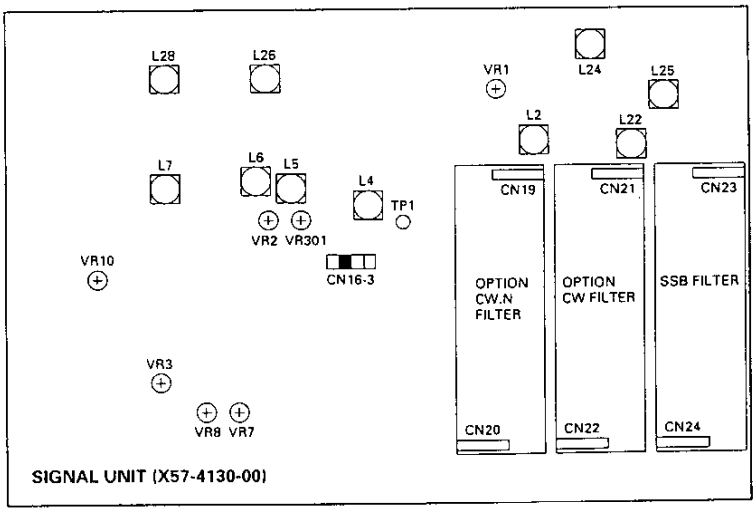

Adjustment points (DSP Unit)

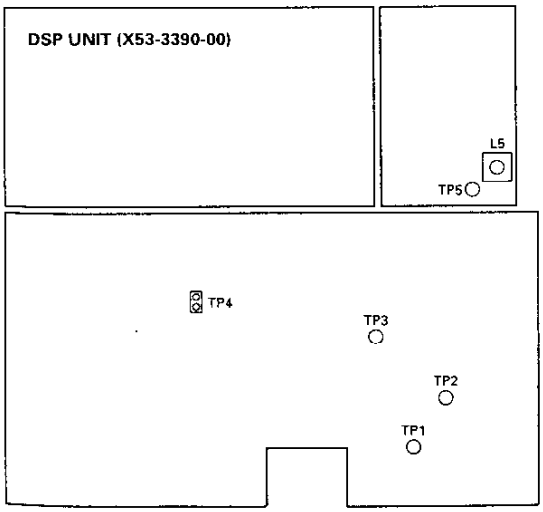

DSP UNIT (X53-3390-00)
L5 : VCO

AF UNIT (X49-3050-00)
L13, 14 : MAIN NB
VR2 : CW side tone
VR3 : SUB tone
VR4 : Narrow FM
VR5, 6 : FM MIC AMP

VCO2 (X58-3390-03)
TC1 : VCO0

VCO (X58-3630-00)
TC1~4 : VCO1

SIGNAL UNIT (X57-4130-00)
VR1 : MAIN S-meter
VR2 : NOTCH (USB)
VR3 : MAIN AGC
VR7 : FM GAIN
VR8 : GAIN 2
VR10 : FM GAIN
VR301 : NOTCH (LSB)
L2, 4, 5, 7 : MAIN RX IF AMP
L6 : NOTCH (USB)
L22 : GAIN 1
L24, 25 : PROC AMP
L28 : FM GAIN

IF UNIT (X48-3100-00)
VR1 : Monitor level
VR2 : SUB S-meter
VR3 : SUB AGC
VR4 : 64.2MHz spurious
L1 : SUB MCF
L1~8 : SUB RX IF AMP
L9~11 : MAIN MCF
L12~17, 20, 28~30 : MAIN RX IF AMP
L18, 19 : IF OUT 1
L21, 22 : SUB NB
L23~27, 31 : TX IF AMP
L300, 301 : 8.83MHz MCF

ADJUSTMENT

Item	Condition	Measurement			Adjustment			Specifications/Remarks
		Test-equipment	Unit	Terminal	Unit	Parts	Method	
32. Fan motor check	1) POWER : ON Heat thermister with soldering iron or blower which is stained with power transformer.						Check	The fan on the rear panel of the power unit beneath the internal speaker is to be turning. The direction of the blowing air should be towards the rear panel.
	2) POWER : OFF							The fan mounted on the final heat sink must also be turning. The direction of the blowing air should be towards the rear panel.
33. AT check	1) POWER : ON M. DISP : 21.050MHz MODE : CW METER SWR : ON THRU/AUTO : AUTO SEND : ON After checked SEND : REC	150Ω dummy load	Rear panel	ANT			Check	ON AIR LED : Light. AT should not operate.
	2) M. DISP : See right table. OFF/AT TUNE : ON After checked OFF/AT TUNE : OFF	AT operation check frequency (M. CH : 64–73) 64 : 1.830.00MHz 70 : 18.100.00MHz 65 : 3.500.00MHz 71 : 21.000.00MHz 67 : 7.000.00MHz 72 : 24.900.00MHz 68 : 10.100.00MHz 73 : 29.600.00MHz 69 : 14.000.00MHz			AT	TC1	Check When the M. DISP 29.600.00MHz and SWR 1.0 to 1.3, variable capacitor has flutters so that it does not stop, adjust the TC1 at which SWR 1.2 or less is acceptable.	Begins AT tuning after entering the transmission state. This should stop within roughly 6 seconds. ON AIR LED : Light AT TUNE LED : Light→OFF SWR : 1.2 or less.
34. AT manual tuning	1) M. CH : 74 (21.050.00MHz) MENU : Push MENU : 08 DOWN : Push OFF/AT TUNE : ON After checked OFF/AT TUNE : OFF UP : Push				Front panel	Main encoder Sub encoder	Check	AT should operate whenever tuning is changed. MODE : CW. Note : Check quickly

Adjustment Points (AVR Unit)

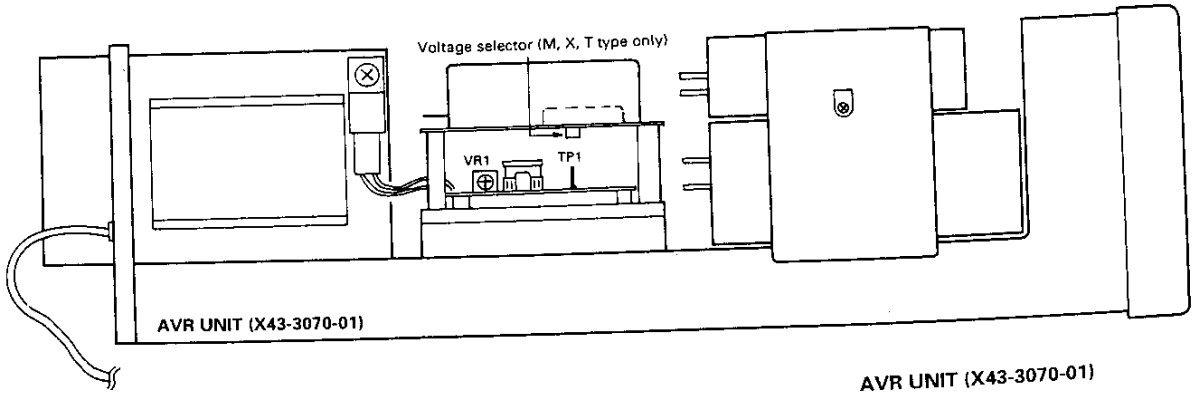

AVR UNIT (X43-3070-01)
VR1 : Voltage

TERMINAL FUNCTION

Connector No.	Terminal No.	Terminal Name	Terminal Function
SWITCH UNIT (A) (X41-3240-00)			
CN1 (A/10)	1	LTXB	TX LED signal. Active "H"
	2	LMTA	AT-TUNE LED signal. Active "H"
	3	LSUB	SUB LED signal. Active "H"
	4	HIPC	AIP LED signal. Active "L"
CN2 (A/10)	1	GND	GND.
	2	MD	MIC down signal.
	3	MU	MIC up signal.
	4	K0	key output 0. SW on : "L"
	5	K1	Key output 1. SW on : "L"
	6	K2	Key output 2. SW on : "L"
	7	K3	Key output 3. SW on : "L"
	8	K4	Key output 4. SW on : "L"
	9	K5	Key output 5. SW on : "L"
	10	K6	Key output 6. SW on : "L"
	11	K7	Key output 7. SW on : "L"
	12	S0	Key matrix select signal 0. "L" : Select
	13	S1	Key matrix select signal 1. "L" : Select
	14	S2	Key matrix select signal 2. "L" : Select
	15	S3	Key matrix select signal 3. "L" : Select
	16	S4	Key matrix select signal 4. "L" : Select
	17	S5	Key matrix select signal 5. "L" : Select
	18	S6	Key matrix select signal 6. "L" : Select
	19	NC	Not used.
	20	GND	GND.
CN3 (A/10)	1	MD	MIC down signal.
	2	MU	MIC up signal.
	3	NC	Not used.
CN4 (A/10)	1	S6	Key matrix select signal 6.
	2	K7	Key output 7.
	3	K6	Key output 6.
	4	K5	Key output 5.
	5	NC	Not used.
CN5 (A/10)	1	K0	Key output 0.
	2	S5	Key matrix select signal 5.
CN6 (A/10)	1	GND	GND.
	2	LRB	Function RX-B LED signal input. Active "H"
	3	LTB	Function TX-B LED signal input. Active "H"
	4	LTM	Function TX-M LED signal input. Active "H"
	5	LRA	Function RX-A LED signal input. Active "H"
	6	LRM	Function RX-M LED signal input. Active "H"
	7	LK1	Ten key LED signal input. Active "H"
	8	LTA	Function TX-A LED signal input. Active "H"
	9	LFSK	FSK LED signal input. Active "H"
	10	LLSB	LSB LED signal input. Active "H"
	11	LUSB	USB LED signal input. Active "H"
	12	LCW	CW LED signal input. Active "H"
	13	LAM	AM LED signal input. Active "H"
	14	NC	Not used.
	15	NC	Not used.
	16	LFM	FM LED signal input. Active "H"
	17	TR	TX/RX identity signal output.
	18	5DIG	+5V.
CN7 (B/10)	1	+15	+15V.
	2	VOX	VOX signal. On : "H"
	3	FULL	Full break-in signal. On : "H"
CN8 (B/10)	1	MONI	Monitor signal. On : "H"
CN9 (B/10)	1	DIM2	Dimmer signal input.
	2	DIM1	Dimmer signal output.

Connector No.	Terminal No.	Terminal Name	Terminal Function
CN10 (C/10)	1	SS	REC/SEND control output. "L" : TX
	2	ATA	AT AUTO control output. "L" : AUTO
	3	ATS	AT switch. Active "H"
	4	GND	GND
CN11 (C/10)	1	ATS	AT switch. Active "H"
	2	+15	+15V.
	3	MOS	Monitor signal. On : "H"
CN12 (H/10)	1	ANI	Audio signal.
	2	GND	GND.
CN13 (H/10)	1	VI	Audio signal for DRU-2.
	2	GND	GND.
	3	PCV	Variable voltage gain for power control.
CN14 (H/10)	1	PKSS	Packet stand-by input. Active "L"
	2	GND	GND.
	3	PRCVR2	Processor in signal output.
	4	GND	GND.
	5	MICVR2	MIC volume signal output.
	6	MICAO	MIC amplifier signal output.
	7	GND	GND.
	8	GND	GND.
	9	PRL2	Processor out signal output.
CN15 (H/10)	1	8M	+8V.
	2	GND	GND.
	3	SS	Stand-by switch.
	4	MG	GND.
	5	MIC	MIC signal.
CN16 (H/10)	1	DATC	Data mode signal input.
	2	POV3	Power volume GND.
	3	POV2	Power volume output.
	4	POV1	Power volume input.
	5	SS	Stand-by switch.
	6	GND	GND.
	7	+8	+8V.
CN17 (E/10)	1	CWD	CW delay control voltage output.
	2	+15	+15V.
	3	CV1	CAR level volume adjustment.
	4	CV2	CAR level volume adjustment.
	5	GND	GND.
CN18 (E/10)	1	GND	GND.
	2	VOXVR2	VOX gain control voltage output.
	3	GND	GND.
	4	AVR2	ANTI VOX control voltage output.
	5	VOXDL	VOX delay control voltage output.
	6	GND	GND.
	7	MONVR2	Monitor signal output.
CN19 (E/10)	1	GND	GND.
	2	MICAO	MIC amplifier signal input.
CN20 (E/10)	1	GND	GND.
	2	ANTI	ANTI VOX audio signal input.
	3	GND	GND.
	4	MICAO	MIC amplifier signal output.
	5	GND	GND.
	6	MONVR1	Monitor signal input.
CN21 (F/10)	1	GND	GND.
CN22 (F/10)	1	K7	Key output 7 input.
	2	K6	Key output 6 input.
	3	K5	Key output 5 input.
	4	S6	Key matrix select signal 6 input.
CN23 (F/10)	1	AFTS	AF VBT switch output. "H" : On
	2	NOTS	Notch switch output. "H" : On

TERMINAL FUNCTION

Connector No.	Terminal No.	Terminal Name	Terminal Function
	3	NFM15	+15V (Except FM mode).
CN24 (G/10)	1	+15	+15V.
CN25 (G/10)	1	SSBB	SSB power supply.
	2	PRCSW	Processor switch output. "H" : On
	3	GND	GND.
	4	MPV	Processor signal select.
	5	NB2	Noise blanker 2 switch output.
	6	NB1	Noise blanker 1 switch output.
	7	GND	GND.
	8	+15	+15V.
CN26 (G/10)	1	GND	GND.
	2	PRCVR2	Processor in signal.
	3	GND	GND.
	4	MICVR2	MIC volume output signal.
CN27 (G/10)	1	NBV2	Main NB2 control voltage.
	2	SNBV2	Sub NB2 control voltage.
	3	SNBV1	Sub NB1 control voltage.
	4	NBV1	Main NB1 control voltage.
	5	GND	GND.
	6	+15	+15V.
CN28 (G/10)	1	SNB2	Sub NB2.
	2	SNB1	Sub NB1.
CN33 (C/10)	1	MONI	Monitor signal. On : "H"
CN34 (G/10)	1	GND	GND.
CN101 (J/10)	1	VD	Voice synthesizer signal.
	2	GND	GND.
	3	SD	Serial data input.
	4	SCK	Serial clock output.
	5	BSY	Synthesis busy input.
	6	STR	Synthesis start output.
	7	5V	+5V.
	8	GND	GND.
CN102 (J/10)	1	BEEP	Not used
	2	E	GND.
	3	VI	MIC input/output.
	4	VO	Audio input/output.
	5	VOA	Audio signal select.
CN103 (J/10)	1	CK	Not used.
	2	DT	Not used.
	3	VCK	DRU-2 installed signal.
	4	GND	GND.
	5	D8	Control data 8.
	6	D1	Control data 1.
	7	D2	Control data 2.
	8	D4	Control data 4.
CN104 (J/10)	1	DST	Not used.
	2	5V	+5V.
	3	DV	Not used.
	4	VOB	Audio signal select.
	5	VOA	Audio signal select.
	6	RD	Read signal.
	7	WR	Write signal.
	8	ACL	Reset signal.
	9	STBY	Stand-by control.
	10	OE	GND.
CN105 (J/10)	1	GND	GND.
	2	POD1	Variable capacitor VC1 position detect signal.
	3	POD2	Variable capacitor VC2 position detect signal.
	4	VRE	+5V for A/D.
	5	PR11	Motor 1 control signal.
	6	PR12	Motor 1 control signal.
	7	PR21	Motor 2 control signal.
	8	PR22	Motor 2 control signal.
	9	APRE	Control select signal. "H" : Manual
	10	SPED	Motor speed control pulse.
	11	ATE	Not used.
	12	ATA	AT through/on select. "L" : On
CN106 (J/10)	1	GND	GND.
	2	POD1	Variable capacitor VC1 position detect signal.
	3	POD2	Variable capacitor VC2 position detect signal.
	4	5V	+5V.
	5	PR11	Motor 1 control signal.
	6	PR12	Motor 1 control signal.
	7	PR21	Motor 2 control signal.
	8	PR22	Motor 2 control signal.
	9	APRE	Control select signal. "H" : Manual
	10	SPED	Motor speed control pulse.
	11	ATA	AT through/on select. "L" : On
CN107 (J/10)	1	D8	Control data 8.
	2	D4	Control data 4.
	3	D2	Control data 2.
	4	D1	Control data 1.
	5	VOB	Audio signal select.
	6	VOA	Audio signal select.
	7	RD	Read signal.
	8	WR	Write signal.
CN108 (J/10)	1	GND	GND.
	2	MON	Monitor input.
	3	GND	GND.
	4	MANO	Main audio input.
CN109 (J/10)	1	NC	Not used.
	2	GND	GND.
	3	MONVR1	Monitor output.
CN110 (J/10)	1	GND	GND.
	2	VI	MIC input/output.
CN111 (J/10)	1	GND	GND.
	2	VD	Voice synthesizer signal.
	3	RXB	RX power supply +15V.
CN112 (J/10)	1	GND	GND.
	2	VSSTR	Synthesis start output.
	3	VSDA	Serial data input.
	4	VSCK	Serial clock output.
	5	ACL	Reset signal.
	6	VCK	DRU-2 installed signal.
	7	VSBSY	Synthesis busy input.
W1 (B/10)	1	MONI	Monitor signal. On : "H"
W2 (D/10)	1	MG	MIC GND.
	2	MIC	MIC signal.
	3	SS	Stand-by switch.
	4	GND	GND.
	5	MD	MIC down signal.
	6	MU	MIC up signal.
	7	8M	+8V.
W3 (G/10)	1	K0	Key output 0.
	2	S5	Key matrix select signal 5.
W4 (K/10)	1	SNBV1	Sub NB1 control voltage.
	2	NBV2	Main NB2 control voltage.
	3	NBV1	Main NB1 control voltage.

TERMINAL FUNCTION

Connector No.	Terminal No.	Terminal Name	Terminal Function
	4	GND	GND.
	5	SNBV2	Sub NB2 control voltage.
	6	+15	+15V.
SWITCH UNIT (B) (X41-3250-00)			
CN1 (A/10)	1	SQ1	SQ volume input except FM mode.
	2	SQ2	SQ volume output except FM mode.
	3	FQS2	FM SQ volume output.
	4	FSQ1	FM SQ volume input.
	5	GND	GND.
	6	NOV2	Notch volume output.
	7	NOTS	Notch volume input.
CN2 (B/10)	1	SUBVR2	Sub AF volume output.
	2	GND	GND.
	3	SUBVR1	Sub AF volume input.
	4	GND	GND.
CN3 (B/10)	1	AGND	GND.
	2	PIT	CW pitch voltage output.
	3	VRE4	Reference voltage 4.
CN4 (C/10)	1	+15	+15V.
	2	ATT2	Attenuator signal 2. 0,6dB : "H"
	3	ATT1	Attenuator signal 1. 6,18dB : "H"
CN5 (D/10)	1	VRE5	Reverence voltage 5.
	2	AGC	AGC voltage output.
	3	GND	GND.
	4	KS1	Kwy speed control.
	5	KS2	Key speed control.
CN6 (F/10)	1	REN1	RIT encoder output 1.
	2	GND	GND.
	3	REN2	RIT encoder output 2.
CN7 (G/10)	1	GND	GND.
	2	MAINVR2	Main AF volume output.
	3	GND	GND.
	4	MAINVR1	Main AF volume input.
CN8 (G/10)	1	RFB2	RF gain control.
	2	RFB1	RF gain control.
CN9 (H/10)	1	MAIN1	Main AF signal.
	2	MAIN2	Main AF signal. Phone plug installed : Open
	3	GND	GND.
	4	GND	GND.
	5	SUB2	Sub AF signal. Phone plug installed : Open
	6	SUB1	Sub AF signal.
CN10 (E/10)	1	GND	GND.
	2	CEN1	Click encoder output 1.
	3	CEN2	Click encoder output 2.
CN11 (J/10)	1	AFVBT1	AF VBT control.
	2	AFVBT2	AF VBT control.
	3	NC	Not used.
	4	AGND	GND.
	5	VBT	IF VBT voltage output.
	6	VRE3	Reference voltage 3.
CN12 (K/10)	1	SLL	Slope tune low cut voltage output.
	2	AGND	GND.
	3	SLH	Slope tune high cut voltage output.
	4	VRE1	Reference voltage 1.
	5	VRE2	Reference voltage 2.
W1 (K/10)	1	GND	GND

Connector No.	Terminal No.	Terminal Name	Terminal Function
W2 (H/10)	1	GND	GND
AVR UNIT (X43-3070-01)			
CN1 (A/6)	1	FG2	GND.
	2	F15	Final unit +15V output.
	3	F15	Final unit +15V output.
CN2 (A/6)	1	+MT1	Power supply fan +.
	2	−MT1	Power supply fan −.
CN3 (A/6)	1	+MT2	Transformer fan +.
	2	−MT2	Transformer fan −.
CN4 (A/6)	1	15SG	Signal unit +15V output.
	2	GND	GND.
	3	−12SG	Signal unit −12V output.
CN5 (A/6)	1	TPT	Approx. 5V output when power down.
	2	GND	GND.
	3	AF15	Control unit +15V output. (For AF amplifier µPC2002)
	4	15CN	Control unit +15V output.
	5	−12CN	Control unit −12V output.
CN6 (A/6)	1	5PL	PLL unit +5V output.
	2	15PL	PLL unit +15V output.
	3	GND	GND.
	4	5DG	Digital unit +5V output.
	5	GND	GND.
	6	5DS	Display unit +5V output.
	7	15DS	Display unit +15V output.
	8	GND	GND.
CN7 (D/6)	1	F	Display unit heater voltage input. (Between F to FG : AC 4.9V)
	2	FG	Display unit heater GND.
	3	F	Display unit heater voltage input. (Between F to FG : AC 4.9V)
CN8 (A/6)	1	5DM	DSP unit +5V output.
	2	5GND	GND.
	3	15DM	DSP unit +15V output.
	4	15GND	GND.
	5	−12DM	DSP unit −12V output.
	6	NC	Not used.
CN9 (C/6)	1	FG1	Final unit GND.
	2	FG1	Final unit GND.
	3	FHV	Final unit +68V output.
	4	FHV	Final unit +68V output.
CN10 (A/6)	1	GND	GND.
	2	GND	GND.
	3	CO	+15V power supply input.
	4	CO	+15V power supply input.
CN11 (B/6)	1	HV	Display unit −40V output.
	2	HG	GND.
	3	NC	Not used.
CN12 (B/6)	1	GND	GND.
	2	−12	Each unit −12V output.
CN13 (B/6)	1	AC40	−40V power supply input.
	2	AC40	−40V power supply input.
	3	AC12	−12V power supply input.
	4	AC12	−12V power supply input.
CN14 (D/6)	1	F	Display unit heater voltage output. (Between F to FG : AC 4.9V)
	2	FG	Display unit heater GND.
	3	F	Display unit heater voltage output. (Between F to FG : AC 4.9V)

TERMINAL FUNCTION

Connector No.	Terminal No.	Terminal Name	Terminal Function
CN15 (D/6)	1	BB	+15V power supply bias output.
CN16 (A/6)	1	SCRA	SCR input.
W1 (A/6)	1	GND	GND.
	2	−12	Each unit −12V input.
W2 (C/6)		GND	GND.
		GND	GND.
		CO	+15V power supply output.
		CO	+15V power supply output.
W3 (A/6)		BB	+15V power supply bias input.
W4 (A/6, E/6)	1	S1	Heat sink thermal switch +.
	2	S2	Heat sink thermal switch −.
W101 (F/6)		SCRA	SCR output.
(B/6)		AC-L	AC live (AC hot side).
		AC-N	AC neutral (AC GND side).
		PWR-C	Power switch common.
		PWR-M	Power switch make.
		T-L	Power transformer live.
		T-N	Power transformer neutral.
RF UNIT (X44-3140-00)			
CN1		TIF	TX IF signal (73.05MHz).
CN2	1	MKR	Marker signal.
	2	GND	Marker signal GND.
CN3		MVCO	Main LO1 input (73.06~103.05MHz).
CN4		SVCO	Sub LO1 input (40.065~70.055MHz).
CN6	1	HIPC	AIP control signal.
	2	RB0	RX band data.
	3	RB1	RX band data.
	4	RB2	RX band data.
	5	RB3	RX band data.
	6	NC	Not used.
CN7		MIF	Main IF signal (73.05MHz).
CN8	1/2	RANT	RX antenna input.
	2/2	DRV	TX drive output.
CN9	1	ATT1	RX attenuator signal. "H" : 10dB
	2	ATT2	RX attenuator signal. "L" : 20dB
	3	+15	+15V.
	4	PCV	Power control gain variable voltage.
CN10		SIF	Sub IF signal.
W4	1	GND	GND.
	2	MOS	+15V when monitor operation.
	3	ATS	+15V when AT TUNE operation.
	4	AGC	RF AGC control signal.
	5	TXB	TX +15V.
	6	+15	+15V.
	7	RXB	RX +15V.
W5	1	GND	GND.
	2	TF1	TX BPF select signal (0.01~7.5MHz).
	3	TF2	TX BPF select signal (7.5~24.5MHz).
	4	TF3	TX BPF select signal (14.5~30MHz).
FINAL UNIT (X45-3450-00)			
CN1	1	FG1	50V GND.
	2	FG1	50V GND.
	3	FHV	+50V.
	4	FHV	+50V.

Connector No.	Terminal No.	Terminal Name	Terminal Function
CN2	1	FG2	−15V.
	2	F15	+15V.
	3	F15	+15V.
CN3	1	TXI	TX inhibit.
	2	TXB	TX 15V.
	3	IC−	IC meter −.
	4	IC+	IC meter +.
CN4	1	NC	Not used.
	2	TXB	TX 15V.
	3	F15	+15V.
CN5	1	MOT+	Fan motor +.
	2	MOT−	Fan motor −.
CN6		DRV	Drive signal input.
W1		PO	Final output.
DIGITAL UNIT (X46-313X-XX)			
CN1	1	SMG	Analog GND.
	2	SMKR	SM-230 sub marker D/A data output.
	3	RG0	SM-230 span data 0 input.
	4	RG1	SM-230 span data 1 input.
	5	SMKC	SM-230 sub marker control signal output. "L" : On, "H" : Off
	6	DGG	GND.
	7	NC	Not used.
CN2	1	GND	GND.
	2	RB3	RX band data 3 output.
	3	RB2	RX band data 2 output.
	4	RB1	RX band data 1 output.
	5	RB0	RX band data 0 output.
	6	HIPC	AIP on/off signal output.
CN3	1	GND	GND.
	2	LP3	TX band signal 3 output.
	3	LP2	TX band signal 2 output.
	4	LP1	TX band signal 1 output.
	5	LP0	TX band signal 0 output.
CN4	1	LSUB	Sub LED signal output.
	2	LTXB	TX LED signal output.
	3	LMTA	AT TUNE LED signal output.
	4	HIPC	AIP LED signal output.
CN5	1	SBTH	Sub IF filter through select.
	2	SB27	Sub IF filter 2.2kHz select.
	3	SB50	Sub IF filter 500Hz select.
CN6	1	NC	Not used.
	2	PROC	Processor switch.
	3	LTXB	TX LED signal input.
	4	ESS	Personal computer interface transmission request output. Active "H"
	5	TXI	TX inhibit signal output. Active "L"
	6	CSS	TX/RX control signal input. "L" : TX, "H" : RX
	7	NC	Not used.
	8	DATC	DATA mode signal output. "L" : DATA mode
	9	NC	Not used.
	10	NC	Not used.
	11	ALMS	METS select signal output. "L" : ALC meter, "H" : Ic meter
	12	ATS	AT TUNE start switch input.
	13	ATA	AT on (auto)/off (through) switch input.
	14	−12	−12V input.
	15	+15	+15V input.
	16	GND	GND.

TERMINAL FUNCTION

Connector No.	Terminal No.	Terminal Name	Terminal Function
CN7	1	GND	GND.
	2	PLE4	PLL control data enable 4 output.
	3	DLE1	DDS control data enable 1 output.
	4	PLE9	PLL control data enable 9 output.
	5	DLE2	DDS control data enable 2 output.
	6	PLE5	PLL control data enable 5 output.
	7	PLE8	PLL control data enable 8 output.
	8	PLE6	PLL control data enable 6 output.
	9	PLE7	PLL control data enable 7 output.
	10	NC	Not used.
	11	PDA	PLL control data output.
	12	PCK	PLL control data clock output.
	13	MLE	DSP control data enable output (PLL).
	14	MEN	DSP control data enable output (DSP).
	15	MCK	DSP control data clock output (DSP, PLL).
	16	MDA	DSP control data output (DSP, PLL).
	17	UL2	Unlock signal input.
	18	UL3	Unlock signal input.
	19	NC	Not used.
	20	NC	Not used.
	21	NC	Not used.
	22	NC	Not used.
	23	RGSL	DDS shift register select.
	24	GND	GND.
CN8	1	GND	GND.
	2	SSBC	SSB mode signal output. "L" : Mode select
	3	FMC	FM mode signal output. "L" : Mode select
	4	CWC	CW mode signal output. "L" : Mode select
	5	AMC	AM mode signal output. "L" : Mode select
	6	FSKC	FSK mode signal output. "L" : Mode select
	7	DATAC	DATA mode signal output. "L" : Mode select
	8	DB	DSP installed signal output. "H" : Installed
	9	NC	Not used.
	10	LSBC	LSB mode signal output. "L" : Mode select
	11	SD	Serial/parallel converter (TC9174F) data output.
	12	STB	Serial/parallel converter (TC9174F) data enable output.
	13	SCK	Serial/parallel converter (TC9174F) data clock output.
	14	MOS	TX monitor switch input. "H" : Monitor on
CN9	1	MH0	DSP filter select signal.
	2	MH1	DSP filter select signal.
	3	MH2	DSP filter select signal.
	4	MATT	DSP attenuator select signal.
	5	DBC	DSP installed signal.
CN10	1	NC	Not used.
	2	CALS	500kHz marker signal.
	3	GND	GND.
CN12	1	GND	GND.
	2	FDT	Display tube and LED data output.
	3	FCK	Display tube and LED data clock output.
	4	FLE	Display tube and LED data enable output.
	5	FBY	Display tube and LED data busy input. "L" : Busy
	6	RES	Reset signal output. "L" : Reset
	7	5DG	+5V.
	8	LH	Dimmer control signal input (Latch).
	9	BI	Dimmer control signal input (Blanking).
	10	GND	GND.
CN13	1	GND	GND.
	2	NC	Not usd.
	3	S6	Key matraix select signal 6 output. "L" : Select
	4	S5	Key natrix select signal 5 output. "L" : Select
	5	S4	Key matrix select signal 4 output. "L" : Select
	6	S3	Key matrix select signal 3 output. "L" : Select
	7	S2	Key matrix select signal 2 output. "L" : Select
	8	S1	Key matrix select signal 1 output. "L" : Select
	9	S0	Key matrix select signal 0 output. "L" : Select
	10	K7	Key input 7. "L" : SW on
	11	K6	Key input 6. "L" : SW on
	12	K5	Key input 5. "L" : SW on
	13	K4	Key input 4. "L" : SW on
	14	K3	Key input 3. "L" : SW on
	15	K2	Key input 2. "L" : SW on
	16	K1	Key input 1. "L" : SW on
	17	K0	Key input 0. "L" : SW on
	18	MU	MIC up signal input. "L" : SW on
	19	MD	MIC down signal input. "L" : SW on
	20	GND	GND.
CN14	1	GND	GND.
	2	NC	Not used.
	3	MVBD	PLL band data D output. (Main VCO1)
	4	MVBC	PLL band data C output. (Main VCO1)
	5	MVBB	PLL band data B output. (Main VCO1)
	6	MVBA	PLL band data A output. (Main VCO1)
	7	UL1	Unlock signal input. (VCO1)
	8	PCK	PLL control data clock output.
	9	PDA	PLL control data output.
	10	PLE1	PLL control data enable 1 output.
	11	PLE0	PLL control data enable 0 output.
	12	MABK	Main AF blanking output. "H" : Blanking
	13	SABK	Sub AF blanking output. "H" : Blanking
	14	GND	GND.
CN15	1	DIM2	Dimmer switch signal.
	2	DIM1	GND.
CN16	1	MRBK	Main RF blanking output. "H" : Blanking
	2	SRBK	Sub RF blanking output. "H" : Blanking
	3	GND	GND.
CN17	1	GND	GND.
	2	VSSTR	VS-2 synthesis start signal.
	3	VSDA	VS-2 serial data.
	4	VSCK	VS-2 serial clock.
	5	ACL	Reset signal.
	6	VCK	DRU-2 installed signal.
	7	VSBSY	VS-2 busy signal.
CN18	1	D8	DRU-2 data line.
	2	D4	DRU-2 data line.
	3	D2	DRU-2 data line.
	4	D1	DRU-2 data line.
	5	VOB	DRU-2 audio input/output select.
	6	VOA	DRU-2 audio input/output select.
	7	RD	DRU-2 command read signal.
	8	WR	DRU-2 command write signal.
CN19	1	VRE5	5V.
	2	AGC	AGC volume voltage.
	3	GND	GND.
CN20	1	SBMET	Sub S-meter voltage.
	2	RMC	RM-1 (external keyboard) voltage,
CN21	1	RWM	Reflected waveform voltage input.
	2	MET3	ALC/Ic voltage input. ALMS "L" : ALC, "H" : Ic
	3	MET1	Signal/RF voltage input. RX : Signal, TX : RF
	4	PRM	Processor meter voltage input.
	5	AGND	Analog GND.
	6	NC	Not used.

TERMINAL FUNCTION

Connector No.	Terminal No.	Terminal Name	Terminal Function
CN22	1	GND	GND.
	2	RXD	Personal computer interface receive signal input.
	3	TXD	Personal computer interface transmit signal output.
	4	DGD	GND.
	5	CTS	Personal computer interface transmit enable signal input.
	6	RTS	Personal computer interface receive enable signal output.
	7	GND	GND.
CN23	1	5DG	+5V.
	2	GND	GND.
CN24	1	VRE2	A/D reference voltage output (5V).
	2	VRE1	A/D reference voltage output (5V).
	3	SLL	Slope tune low cut volume input.
	4	SLH	Slope tune high cut volume input.
	5	AGND	Analog GND.
CN26	1	VRE3	A/D reference voltage output (5V).
	2	VBT	VBT volume input.
	3	AGND	Analog GND.
CN27	1	VRE4	A/D reference voltage output (5V).
	2	PIT	Pitch volume input.
	3	AGND	Analog GND.
	4	NC	Not used.
CN28	1	GND	GND.
	2	POD1	AT variable capacitor position volume.
	3	POD2	AT variable capacitor position volume.
	4	5V	5V.
	5	PR11	Motor rotation direction control.
	6	PR12	Motor rotation direction control.
	7	PR21	Motor rotation direction control.
	8	PR22	Motor rotation direction control.
	9	APRE	Motor control select.
	10	SPED	Motor speed control.
	11	ATA	AT AUTO/THROUGH switch signal.
CN29	1	CEN1	Click encoder pulse 1 input. 1 rotation : 250 pulses
	2	CEN2	Click encoder pulse 2 input. 1 rotation : 250 pulses
	3	GND	GND.
	4	REN1	RIT encoder pulse 1 input. 1 rotation : 50 pulses
	5	REN2	RIT encoder pulse 2 input. 1 rotation : 50 pulses
	6	GND	GND.
CN30	1	5DG	+5V.
	2	EN1	Main encoder pulse 1 input. 1 rotation : 250 pulses
	3	EN2	Main encoder pulse 2 input. 1 rotation : 250 pulses
	4	GND	GND.
CN31	1	5DG	+5V.
	2	SEN1	Sub encoder pulse 1 input. 1 rotation : 100 pulses
	3	SEN2	Sub encoder pulse 2 input. 1 rotation : 100 pulses
	4	GND	GND.
CN32	1	KS1	Electronic keyer speed volume.
	2	KS2	Electronic keyer speed volume.
CN33	1	COM	GND.
	2	DASH	Electronic keyer dash.
	3	DOT	Electronic keyer dot.
	4	KEY	KEY signal.
CN36	1	SVBD	Sub VDO select signal.
	2	SVBC	Sub VCO select signal.
	3	SVBB	Sub VCO select signal.
	4	SVBA	Sub VCO select signal.
CN37	1	VOX	VOX switch signal.
	2	FULL	FULL/SEMI switch signal.
	3	AGO	AGC off select signal.
	4	MID	AGC medium select signal.
	5	SLOW	AGC slow select signal.
CN38	1	SEP0	Speaker mixing select.
	2	SEP1	Speaker mixing select.
	3	SEP2	Speaker mixing select.
	4	SEP3	Speaker mixing select.
CN39	1	GND	GND.
	2	KEY	Extension KEY signal.
IF UNIT (X48-3100-00)			
CN1	1	88FC	2.7kHz filter select.
	2	88FE	CW filter select.
	3	88FD	1.8kHz filter select.
	4	88FB	AM filter select.
	5	88FA	FM filter select.
	6	MNG2	Main NB2 pulse input.
	7	MNG1	Main NB1 pulse input.
	8	PSQ	Packet squelch.
	9	STS	Side tone switch.
	10	NC	Not used.
CN2	1	SNB1	Sub NB1 switch.
	2	SNB2	Sub NB2 switch.
CN3	1	ALC	ALC voltage.
	2	CKY	Keying control signal.
	3	GND	GND.
CN4		TIF	TX IF signal (73.05MHz) output.
CN5		H642	Main LO2 (64.22MHz) signal input.
CN6		MIF	Main 1st IF signal (73.05MHz) input.
CN7		SIF	Sub 1st IF signal (20.055MHz) input.
CN8	1	NB	Main NB signal (8.83MHz) output.
	2	NBG	Main NB signal GND.
CN9		H507	Sub LO2 signal (50.75MHz) input.
CN10	1	SRBK	Sub IF blanking.
	2	MRBK	Main IF blanking.
CN11	1	GND	GND.
	2	SP3	Speaker output. (AF output will opened when using EXT. SP.)
	3	GND	GND.
	4	SP2	Speaker input.
CN12		PKSS	Packet stand-by switch.
CN13	1	IFO2	IF OUT2 (100kHz) output. High impedance.
	2	GND	GND.
	3	DRIF	RX DSP (100kHz) output.
	4	GND	GND.
CN14	1	SP1	Speaker input.
	2	GND	GND.
	3	SS	Stand-by switch.
	4	RAL	External ALC.
	5	NC	Not used.
	6	COM	Electronic keyer common.
	7	DOT	Dot.

TERMINAL FUNCTION

Connector No.	Terminal No.	Terminal Name	Terminal Function
	8	DASH	Dash.
	9	KSW	Key switch.
CN15	1	SANO	Sub audio output.
	2	GND	GND.
	3	MANO	Main audio output.
	4	GND	GND.
	5	ANI	Rear panel MIC signal input.
	6	GND	GND.
	7	SAF	Sub detection output.
	8	GND	GND.
	9	MANO	Main audio output (DRU-2 recording).
	10	GND	GND.
CN16	1	C107	Sub CAR (10.695MHz) input.
	2	GND	GND.
	3	GND	GND.
CN17	1	TR455	TX/RX 455kHz IF signal input/output.
	2	GND	GND.
CN18	1	GND	GND.
	2	GND	GND.
	3	H837	Main LO3 (8.375MHz) input.
CN19	1	RMC	Remote control unit signal.
	2	SSMT	Sub S-meter signal.
CN20	1	SBTH	Sub filter through select.
	2	SB27	Sub 2.2kHz filter select.
	3	SB50	Sub 500Hz filter select.
CN25	1	KEY	Key input.
	2	GND	GND.
CN26	1	NC	Dummy terminal when key input. (Prevention of short circuit)
	2	GND	GND.
W1	1	GND	GND.
	2	AGC	Main AGC voltage.
	3	AGCA	Main AGC voltage invert amplify output.
	4	RXB	RX15V.
	5	TXB	TX 15V.
	6	−12	−12V.
	7	+15	+15V.
	8	SMET	Main S-meter output.
AF UNIT (X49-3050-00)			
CN1	1	MNG1	Noise blanker 1 gate control signal.
	2	MNG2	Noise blanker 2 gate control signal.
	3	SQ	Squelch signal.
	4	STS	Side tone switch.
	5	RXB	RX +15V.
	6	TXB	TX +15V.
	7	DB	DSP on signal.
	8	FSKC	FSK mode control signal.
	9	CWC	CW mode control signal.
	10	FMC	FM mode control signal.
	11	SSBC	SSB mode control signal.
	12	FMNC	FM NARROW mode control signal.
	13	−12	−12V.
	14	+15	+15V.
CN2	1	NB	Main NB signal (8.83MHz) output.
	2	NBG	Main NB signal GND.
CN3	1	GND	GND.
	2	SANO	Sub audio output.
	3	GND	GND.
	4	MANO	Main audio output.
	5	GND	GND.
	6	SAF	Sub detection input.

Connector No.	Terminal No.	Terminal Name	Terminal Function
CN4	1	GND	GND.
	2	DAF2	DSP AF input.
	3	GND	GND.
	4	DAF1	DSP AF output.
CN5	1	GND	GND.
	2	AFVBT1	AF VBT volume.
	3	AFVBT2	AF VBT volume.
	4	GND	GND.
CN6	1	AFT	AF tune clock (80kHz ± 50kHz).
	2	GND	GND.
CN7	1	NB1	Noise blanker 1 switch.
	2	NB2	Noise blanker 2 switch.
	3	MONI	Monitor switch.
	4	+15	+15V.
	5	GND	GND
CN8	1	MONVR2	Monitor signal input.
	2	GND	GND.
	3	AVR2	ANTI VOX control voltage input.
	4	GND	GND.
	5	VOXDL	VOX delay control voltage input.
	6	GND	GND.
	7	VOXVR2	VOX gain control voltage input.
	8	GND	GND.
CN9	1	+15	+15V.
	2	15S	+15V switch.
CN10	1	RBC	RX timing control signal.
	2	VOXQ	VOX delay signal.
	3	KEY	KEY signal.
	4	CWB	CW Power supply (+15V).
CN11	1	AF	Audio signal output.
	2	GND	GND.
	3	SMUT	Sub AF mute signal.
CN12	1	GND	GND.
	2	MICAO	MIC amplifier signal input.
	3	NC	Not used.
	4	MONVR1	Monitor signal output.
	5	GND	GND.
CN13	1	GND	GND.
	2	MAINVR2	Main AF volume input.
	3	NC	Not used.
	4	NC	Not used.
CN14	1	NC	Not used.
	2	MAINVR1	Main AF volume output.
	3	GND	GND.
	4	SUBVR1	Sub AF volume output.
CN15	1	TON	Repeater tone input.
	2	GND	GND.
CN16	1	GND	GND.
	2	SABK	Sub AF blanking input.
	3	MABK	Main AF blanking input.
	4	PLE0	PLL control data enable 0 input.
	5	PLE1	PLL control data enable 1 input.
	6	PDA	PLL control data input.
	7	PCK	PLL control data clock input.
	8	UL1	Unlock signal output.
	9	VBA	PLL band data A.
	10	VBB	PLL band data B.
	11	VBC	PLL band data C.
	12	VBD	PLL band data D.
	13	NC	Not used.
	14	GND	GND.

TERMINAL FUNCTION

Connector No.	Terminal No.	Terminal Name	Terminal Function
CN18	1	10VCO	PLL reference signal (10MHz).
	2	GND	GND.
CN19		H642	Main LO2 output (64.22MHz).
CN20		LO	PLL1 loop IF input (35.05~35.55MHz).
CN21		AFTSW	AF VBT on/off control input.
CN22	1	TF3	TX BPF select signal (14.5~30MHz).
	2	TF2	TX BPF select signal (7.5~14.5MHz).
	3	TF1	TX BPF select signal (0.01~7.5MHz).
	4	GND	GND.
W1	1	GND	GND.
	2	SCAF	Main SSB, CW AF input.
	3	GND	GND.
	4	FAAF	Main FM, AM AF input.
	5	GND	GND.
W3		MVCO	Main LO1 output (73.06~103.05MHz).
PLL UNIT (X50-3170-00)			
CN1	1	GND	GND.
	2	RGSL	TX/RX frequency switching signal.
	3	NC	Not used.
	4	NC	Not used.
	5	NC	Not used.
	6	NC	Not used.
	7	UL3	Unlock signal.
	8	UL2	Unlock signal.
	9	MDA	PLL, DDS, DSP data.
	10	MCK	PLL, DDS, DSP data clock.
	11	MEN	DSP command enable.
	12	MLE	PLL data enable (DSP).
	13	PCK	PLL data clock.
	14	PDA	PLL data.
	15	NC	Not used.
	16	PLE7	PLL data enable (PLL7).
	17	PLE6	PLL data enable (PLL6).
	18	PLE8	PLL data enable (PLL8).
	19	PLE5	PLL data enable (PLL5).
	20	DLE2	DDS data enable (DDS2).
	21	PLE9	PLL data enable (PLL9).
	22	DLE1	DDS data enable (DDS1).
	23	PLE4	PLL data enable (PLL4).
	24	GND	GND.
CN2	1	VBD	VCO select signal (VCO7).
	2	VBC	VCO select signal (VCO7).
	3	VBB	VCO select signal (VCO7).
	4	VBA	VCO select signal (VCO7).
CN3	1	PDA	PLL data.
	2	PCK	PLL data clock.
	3	PLE6	PLL data enable (PLL6).
	4	PLE5	PLL data enable (PLL5).
	5	PLE9	PLL data enable (PLL9).
	6	PLE4	PLL data enable (PLL4).
	7	UL4	Unlock detect signal.
CN4	1	MDA	PLL, DSP data.
	2	MCK	PLL, DSP data clock.
	3	MEN	DSP command enable.
	4	MLE	PLL data enable (DSP).
	5	GND	GND.
CN5	1	15PL	+15V.
	2	5PL	+5V.
	3	GND	GND.
CN6	1	GND	GND.
	2	5PL	+5V.
	3	15PL	+15V.
	4	8PL	+8V.
CN7		LO	PLL1 loop IF output (35.05~35.55MHz).
CN8		SVCO	Sub LO1 output (40.065~70.055MHz).
CN9		H507	Sub LO2 output (50.75MHz).
W2		20M	Reference signal (20MHz).
CAR UNIT (X50-3180-00)			
CN1	1	C355	Main LO4 output (355kHz).
	2	GND	GND.
	3	H837	Main LO3 output (8.375MHz).
	4	GND	GND.
CN2	1	AFT	AF tune clock (80kHz ± 50kHz).
	2	GND	GND.
CN3	1	C107	Sub CAR output (10.7MHz).
	2	GND	GND.
	3	C100	Main CAR output (100kHz).
	4	GND	GND.
CN4	1	10M	PLL reference signal (10MHz).
	2	GND	GND.
	3	NC	Not used.
CN5	1	10VCO	PLL reference signal (10MHz).
	2	GND	GND.
CN8	1	RTTY	FSK KEY.
	2	GND	GND.
CN9	1	CALS	MKR switch.
	2	GND	GND.
CN10		20M	Reference signal (20MHz).
CN11	1	MKR	MKR signal (500kHz).
	2	NC	Not used.
CN12	1	DGG	Digital GND.
	2	SMKC	Sub marker control.
	3	RG1	Monitor scope span switch.
	4	RG0	Monitor scope span switch.
	5	SMKR	Sub marker signal.
	6	SMG	Analog GND.
CN13	1	GND	GND.
	2	RTS	TX request output.
	3	CTS	TX possible input.
	4	DGG	Signal GND.
	5	TXD	TX data output.
	6	RXD	RX data input.
	7	GND	GND.
W1	1	PDA	PLL data.
	2	PCK	PLL data clock.
	3	PLE6	PLL data enable (PLL6).
	4	PLE5	PLL data enable (PLL5).
	5	PLE9	PLL data enable (PLL9).
	6	PLE4	PLL data enable (PLL4).
	7	UL4	Unlock detect signal.
W2	1	GND	GND.
	2	5PL	+5V.
	3	15PL	+15V.
	4	8PL	+8V.
FILTER UNIT (X51-306X-XX)			
CN1		AT1	AT input.
CN2		AT2	AT output.
CN3	1	RAT	RX antenna.
	2	GND	GND.

TERMINAL FUNCTION

Connector No.	Terminal No.	Terminal Name	Terminal Function
CN4		PO	Filter input.
CN5	1	GND	GND.
	2	F15	+15V.
	3	NC	Not used.
CN6	1	VSR	Reflector detection.
	2	GND	GND.
	3	GND	GND.
	4	VSF	Forward detection.
	5	PD	Power down.
CN7	1	10AT	7.5~10.5MHz AT coil tap band data.
	2	25AT	21.5~24.5MHz AT coil tap band data.
	3	28AT	24.5~30MHz AT coil tap band data.
	4	7AT	4~7.5MHz AT coil tap band data.
	5	18AT	14.5~18.5MHz AT coil tap band data.
	6	21AT	18.5~21.5MHz AT coil tap band data.
	7	4AT	2.5~4MHz AT coil tap band data.
	8	14AT	10.5~14.5MHz AT coil tap band data.
	9	NC	Not used.
	10	GND	GND.
CN8	1	LP0	Filter select. 4 digit BCD input.
	2	LP1	Filter select. 4 digit BCD input.
	3	LP2	Filter select. 4 digit BCD input.
	4	LP3	Filter select. 4 digit BCD input.
	5	GND	GND.
W1		ANT	Antenna connect.
W2		GND	GND.
W23	1	F15	+15V.
	2	TXB	TX +15V.
AT UNIT (X53-3340-01)			
CN1		AT1	AT input.
CN2		AT2	AT output.
CN3	1	VRE	+5V reference voltage for A/D.
	2	POD2	VC2 position detect signal, VR102 output.
	3	GND	GND.
	4	POD1	VC1 position detect signal, VR101 output.
CN4	1	NC	Not used.
	2	M2–	Motor 2 drive –.
	3	M2+	Motor 2 drive +.
	4	M1–	Motor 1 drive –.
	5	M1+	Motor 1 drive +.
CN5	1	F5	Not used.
	2	F15	+15V.
	3	GND	GND.
CN6	1	ATA	AT through/on select. "L" : On
	2	NC	Not used.
CN7	1	ATE	GND for discriminating that AT is connected to microprocessor.
	2	SPED	Motor speed control pulse.
	3	APRE	Control select. "H" : Preset, "L" : Auto tuning
	4	VRE	+5V reference voltage for A/D.
	5	PR22	Motor 2 control signal.
	6	PR21	Motor 2 control signal.
	7	POD2	VC2 position detect signal.
	8	PR12	Motor 1 control signal.
	9	PR11	Motor 1 control signal.
	10	POD1	VC1 position detect signal.
	11	GND	GND.
CN101	1	28A	24.5~30MHz AT coil tap band data.
	2	25A	21.5~24.5MHz AT coil tap band data.
	3	21A	18.5~21.5MHz AT coil tap band data.
	4	18A	14.5~18.5MHz AT coil tap band data.
	5	14A	10.5~14.5MHz AT coil tap band data.
	6	10A	7.5~10.5MHz AT coil tap band data.
	7	7A	4~7.5MHz AT coil tap band data.
	8	4A	2.5~4MHz AT coil tap band data.
	9	GND	GND.
W1		VC1	VC1 hot side.
W2		VC2	VC2 hot side.
W3		GND	GND.
W101		VC	VC1, VC2 common side.
W102		GND	GND.
CONTROL UNIT (X53-3380-00)			
CN1 (B/2)	1	PD	Power down signal.
	2	GND	GND.
	3	VSF	Forward voltage.
CN2 (B/2)	1	GND	GND.
	2	8V	+8V.
	3	POV3	Power volume GND.
	4	POV2	Power volume output.
	5	POV1	Power volume input.
CN4 (A/2)	1	GND	GND.
	2	VSR	Reflector voltage.
CN5 (A/2)	1	8V	+8V.
	2	ALCC	ALC signal.
	3	–12	–12V.
	4	GND	GND.
CN6 (A/2)	1	TXB	TX +15V.
	2	TXI	TX inhibit signal.
	3	IC–	Drain current – signal.
	4	IC+	Drain current + signal.
CN7 (A/2)	1	TPT	Temperature power down voltage +5V.
	2	–12CN	–12V.
	3	+15CN	+15V.
	4	AF15	Audio amplifier voltage supply +15V.
	5	GND	GND.
CN8 (A/2)	1	RXB	RX +15V.
	2	BZ	Beep input.
	3	GND	GND.
	4	VO	Voice synthesizer signal input.
	5	GND	GND.
	6	MAF	Main audio signal input.
	7	GND	GND.
CN9 (A/2)	1	SAF	Sub audio signal input.
	2	GND	GND.
CN10 (A/2)	1	SEP3	Speaker separate signal 3.
	2	SEP2	Speaker separate signal 2.
	3	SEP1	Speaker separate signal 1.
	4	SEP0	Speaker separate signal 0.
CN12 (A/2)	1	SP1	Audio signal output.
	2	GND	GND.
	3	SP2	Audio signal output.
	4	GND	GND.
	5	SP3	Audio signal output.
	6	GND	GND.
CN13 (A/2)	1	ISP	Internal speaker audio signal output.
	2	GND	GND.
CN14 (A/2)	1	ANTI	ANTI VOX signal.
	2	GND	GND.
	3	GND	GND.

TERMINAL FUNCTION

Connector No.	Terminal No.	Terminal Name	Terminal Function
CN15 (A/2)	1	RAL	ALC signal input.
	2	KSW	Key switch.
	3	CKY	Keying control.
	4	ALC	ALC signal output.
	5	SS	Stand-by switch.
CN16 (A/2)	1	GND	GND.
	2	MET3	Meter signal.
	3	RWM	SWR meter signal.
	4	PRM	Processor meter signal.
	5	MET1	Meter signal.
CN17 (A/2)	1	KEY	Key signal. Key down : 0V, Up : 15V
	2	VOX	VOX signal.
	3	FULL	Full break-in signal.
	4	AGO	AGC off.
	5	MID	AGC medium.
	6	SLOW	AGC slow.
CN18 (A/2)	1	PRCSW	Processor switch.
	2	SSBB	SSB voltage supply +15V.
	3	SS	Stand-by switch.
	4	DATC	Data control signal.
	5	+15	+15V.
	6	CWD	CW delay signal.
	7	GND	GND.
CN19 (A/2)	1	RXB	RX +15V.
	2	TXB	TX +15V.
	3	RBC	RX timing control signal.
	4	PRS	Processor switch.
	5	AGS	AGC switch.
	6	MID	AGC medium.
	7	SLOW	AGC slow.
	8	AGO	AGC off.
	9	SSBB	SSB voltage supply +15V.
	10	PRM1	Processor meter signal input.
	11	GND	GND.
	12	SMET	S-meter signal.
	13	CKY	Keying control signal.
	14	D15	+15V when DSP on.
CN20 (A/2)	1	NC	Not used.
	2	VOXQ	VOX delay signal.
	3	KEY	KEY signal. Down : 0V, Up : 15V
	4	CWB	CW +15V.
	5	RBC	RX riming control signal.
CN21 (A/2)	1	NC	Not used.
	2	NC	Not used.
	3	SMUT	Sub AF mute signal.
CN22 (A/2)	1	ATS	AT switch.
	2	ATA	AT AUTO switch.
	3	FULL	Full break-in signal.
	4	VOX	VOX signal.
	5	SS	Stand-by switch.
	6	GND	GND.
	7	+15	+15V.
CN23 (A/2)	1	PRO	Protection signal.
	2	MET1	meter signal input.
	3	TPT	Temperature power down voltage +5V.
	4	ATS	AT switch.
	5	+15	+15V.
	6	GND	GND.
CN24 (A/2)	1	GND	GND.
	2	+15	+15V.
	3	−12	−12V.
	4	ATA	AT AUTO switch.
	5	ATS	AT switch.
	6	ALMS	ALC meter switch.
	7	NC	Not used.
	8	NC	Not used.
	9	DATC	Data control signal.
	10	NC	Not used.
	11	CSS	Stand-by control signal.
	12	TXI	TX inhibit signal.
	13	ESS	Personal computer interface stand-by.
	14	LTXB	ON AIR LED signal.
	15	PROC	Processor switch.
	16	NC	Not used.
W2 (B/2)	1	8V	+8V.
	2	ALCC	ALC signal.
	3	−12	−12V.
	4	GND	GND.
W3 (B/2)	1	PRO	Protection signal.
	2	MET1	Meter signal output.
	3	ATS	AT switch.
	4	TPT	Temperature power down voltage +5V.
	5	GND	GND.
	6	+15	+15V.
W4 (A/2)	1	GND	GND.
	2	SUB2	Sub audio output.
	3	SUB1	Sub audio output.
	4	MAIN2	Main audio output.
	5	MAIN1	Main audio output.
	6	GND	GND.
DSP UNIT (X53-3390-00)			
CN1 (A/3)	1	DRIF	RX IF input.
	2	GND	RX IF GND.
	3	GND	DMIC GND.
	4	DMIC	MIC input.
	5	DAF	Detection output.
	6	GND	Detection GND.
	7	DBC	DSP connection signal.
	8	GND	TX IF GND.
	9	DTIF	TX IF output.
CN2 (A/3)	1	MH2	HPF on/off.
	2	MH1	HPF select.
	3	MH0	HPF select.
	4	MATT	TX IF attenuator on/off.
	5	−12	−12V.
	6	GND	Analog GND.
	7	GND	Analog GND.
	8	+15	+15V.
CN3 (A/3)	1	GND	GND.
	2	MIX	MIX.
	3	GND	GND.
	4	MF10	0 input limit cycle suppression.
	5	SH	S/H sampling signal.
	6	LEC	D/A convert command.
	7	CC	A/D convert command.
	8	GND	GND.
	9	ADDT	A/D data.
	10	GND	GND.
	11	CK17	Data transmission clock.
	12	DADT	D/A data.
	14	GND	GND.
	15	ANSW	D/A chopper.
	16	NTX	TX 0V/RX +5V.
	17	GND	GND.

TERMINAL FUNCTION

Connector No.	Terminal No.	Terminal Name	Terminal Function
	18	15A	+15V.
	19	15A	+15V.
	20	GND	GND.
CN4 (B/3)	1	GND	GND.
	2	15A	+15V.
	3	15A	+15V.
	4	GND	GND.
	5	NTX	TX 0V/RX +5V.
	6	ANSW	D/A chopper.
	7	GND	GND.
	8	DADT	D/A data.
	9	GND	GND.
	10	CK17	Data transmission clock.
	11	GND	GND.
	12	ADDT	A/D data.
	13	GND	GND.
	14	CC	A/D convert command.
	15	LEC	D/A convert command.
	16	SH	S/H sampling signal.
	17	MF10	0 input limit cycle suppression.
	18	GND	GND.
	19	MIX	MIX.
	20	GND	GND.
CN5 (B/3)	1	GND	GND.
	2	5DMS	+5V.
	3	MLE	PLL data enable.
	4	MEN	DSP command enable.
	5	MCK	PLL, DSP data clock.
	6	MDA	PLL, DSP data.
	7	RTK	FSK KEY.
	8	CKY	CW KEY.
	9	TXB	TX +15V.
CN6 (B/3)	1	GND	CLK GND.
	2	CLK	Reference signal.
	3	GND	GND.
	4	+5	+5V.
	5	MLE2	PLL data enable.
	6	MCK2	PLL data clock.
	7	MDA2	PLL data.
	8	+15B	+15V.
CN7 (C/3)	1	10M	Reference 10MHz.
	2	GND	GND.
W1 (C/3)	1	+15B	+15V.
	2	MDA2	PLL data.
	3	MLE2	PLL data enable.
	4	MCK2	PLL data clock.
	5	+5	+5V.
	6	CLK	Reference signal.
	7	GND	CLK GND.
DISPLAY UNIT (X54-3080-01)			
CN1	1	5DG	+5V voltage supply for keyboard.
	2	TR	TX/RX input.
	3	LFM	FM mode LED output. "H" : Lighting
	4	NC	Not used.
	5	NC	Not used.
	6	LAM	AM mode LED output. "H" : Lighting
	7	LCW	CW mode LED output. "H" : Lignting
	8	LUSB	USB mode LED output. "H" : Lighting
	9	LLSB	LSB mode LED output. "H" : Lighting
	10	LFSK	FSK mode LED output. "H" : Lighting
	11	LTA	Function TX-A LED output. "H" : Lignting
	12	LK1	Key top LED output. "H" : Lignting
	13	LRM	Function RX-M LED output. "H" : Lighting
	14	LRA	Function RX-A LED output. "H" : Lighting
	15	LTM	Function TX-M LED output. "H" : Lighting
	16	LTB	Function TX-B LED output. "H" : Lighting
	17	LRB	Function RX-B LED output. "H" : Lighting
	18	GND	GND.
CN2	1	TN1	67.0~250.3Hz repeater tone output.
	2	NC	Not used.
CN3	1	TN2	1750Hz repeater tone output.
	2	NC	Not used.
CN4	1	BZ	Buzzer output.
	2	GND	GND.
CN5	1	GND	GND.
	2	BI	Dimmer blanking signal inut.
	3	LH	Dimmer control output.
	4	5DG	+5V voltage supply input.
	5	RES	Reset signal input. "L" : Reset
	6	FBY	Serial busy output. "L" : Busy
	7	FLE	Serial enable input.
	8	FCK	Serial clock input.
	9	FDT	Serial data input.
	10	GND	GND.
CN6	1	F	FL tube filament power supply input. Between f to F : Approx. AC 9.6V
	2	FG	FL tube filament power supply input. Center tap DC bias : Approx. –28V
	3	F	FL tube filament power supply input. Between f to F : Approx. AC 9.6V
	4	HV	FL tube drive voltage supply input (approx. –40V).
	5	HG	FL tube drive voltage supply GND.
	6	15DS	FL tube drive voltage supply input (+15V).
	7	GND	GND.
	8	5DS	FL tube drive voltage supply input (+5V).
SIGNAL UNIT (X57-4130-00)			
CN1	1	RXB	RX +15V.
	2	TXB	TX +15V.
	3	RBC	RX timing signal.
	4	PRS	Processor switch.
	5	AGS	+15V except data mode.
	6	MID	AGC time constant MID select signal.
	7	SLOW	AGC time constant SLOW select signal.
	8	AGO	AGC OFF signal.
	9	SSBB	SSB +15V.
	10	PRM1	Compression meter voltage output.
	11	GND	GND.
	12	SMET	S-meter voltage output.
	13	CKY	Keying control signal.
	14	D15	+15V output for DSP.
CN2	1	MOS	Monitor switch.
	2	CK	TC9174F clock signal.
	3	STB	TC9174F strobe signal.
	4	SD	TC9174F data signal.
	5	LSBC	LSB mode control signal.
	6	NC	Not used.
	7	DB	DSP on signal.
	8	DATAC	Data mode control signal.
	9	FSKC	FSK mode control signal.
	10	AMC	AM mode control signal.
	11	CWC	CW mode control signal.
	12	FMC	FM mode control signal.
	13	SSBC	SSB mode control signal.
	14	GND	GND.

TERMINAL FUNCTION

Connector No.	Terminal No.	Terminal Name	Terminal Function
CN3	1	NC	Not used.
	2	NC	Not used.
	3	MPV	MIC signal.
	4	GND	GND.
CN4	1	CV2	Carrier volume 2.
	2	CV1	Carrier volume 1.
CN5	1	GND	GND.
	2	DMC	DSP MIC signal.
CN6	1	RFB1	RF gain reference voltage.
	2	RFB2	GND.
	3	PRL2	Processor level control signal.
	4	GND	GND.
CN7	1	GND	GND.
	2	SCAF	Main SSB, CW AF output.
	3	GND	GND.
	4	FAAF	Main FM, AM AF output.
	5	GND	GND.
CN8	1	+15	+15V.
	2	GND	GND.
	3	−12	−12V.
CN9	1	+15	+15V.
	2	−12	−12V.
	3	FMNC	FM NARROW mode control signal.
	4	SSBC	SSB mode control signal.
	5	FMC	FM mode control signal.
	6	CWC	CW mode control signal.
	7	FSKC	FSK mode control signal.
	8	DB	DSP on signal.
	9	TXB	TX +15V.
	10	RXB	RX +15V.
	11	STS	Side tone switch.
	12	SQ	Squelch signal.
	13	MNG2	NB2 gate control signal.
	14	MNG1	NB1 gate control signal.
CN10	1	88FD	455kHz IF filter select signal.
	2	88FE	455kHz IF filter select signal.
	3	88FC	455kHz IF filter select signal.
	4	88FB	455kHz IF filter select signal.
	5	88FA	455kHz IF filter select signal.
	6	MNG2	NB2 gate control signal.
	7	MNG1	NB1 gate control signal.
	8	SQ	Squelch signal.
	9	STS	Side tone switch.
	10	NC	Not used.

Connector No.	Terminal No.	Terminal Name	Terminal Function
CN11	1	ATS	AT switch.
	2	MOS	Monitor switch.
CN12	1	GND	GND.
	2	ATS	AT switch.
	3	MOS	Monitor switch.
	4	AGC	AGC line.
	5	TXB	TX +15V.
	6	RXB	RX +15V.
	7	+15	+15V.
CN13	1	AGC	AGC line.
	2	AGCA	Main AGC voltage.
	3	RXB	RX +15V.
	4	TXB	TX +15V.
	5	−12	−12V.
	6	+15	+15V.
	7	GND	GND.
	8	SMET	S-meter voltage output.
CN14	1	NOTS	NOTCH switch.
	2	NFM15	+15V except FM mode.
	3	FSQ1	FM squelch volume 1.
	4	FSQ2	FM squelch volume 2.
	5	SQ2	Carrier squelch volume 2.
	6	NOTS	NOTCH switch.
	7	NOV2	NOTCH volume 2.
	8	SQ1	Carrier squelch volume 1.
	9	GND	GND.
CN15	1	IFO2	IF OUT2 output.
	2	GND	GND.
CN16	1	C100	100kHz carrier frequency input.
	2	GND	GND.
	3	C355	355kHz local frequency input.
	4	GND	GND.
CN17	1	TR455	TX/RX 455kHz input/output.
	2	GND	GND.
CN18	1	DB	DSP on signal.
	2	GND	GND.
	3	D455	455kHz input from DSP.
CN301	1	TXB	TX +15V.
	2	CKY	Keying control signal.
	3	NC	Not used.

TS-950SDX PC BOARD VIEWS

AVR UNIT (X43-3070-01) Component side view

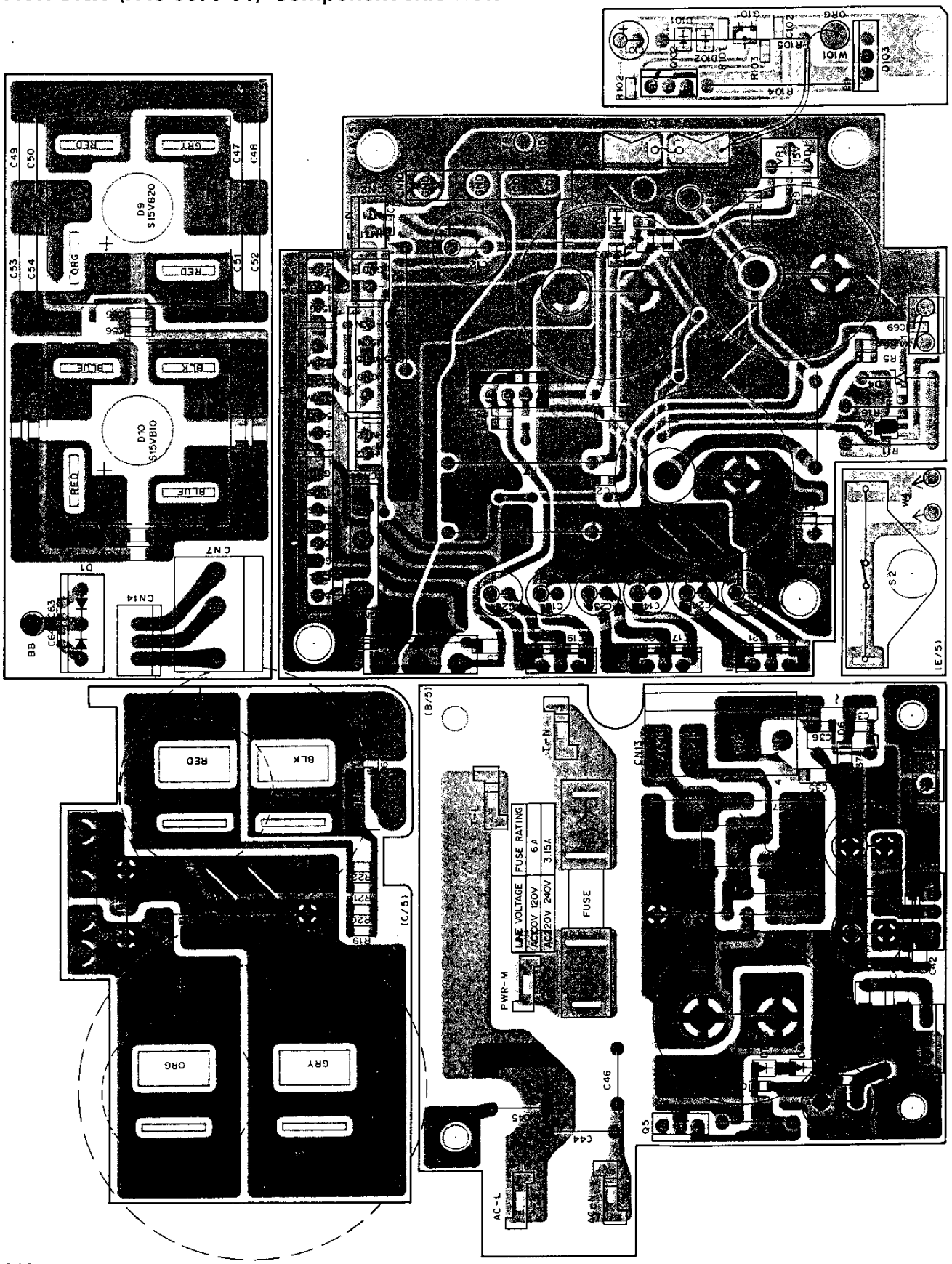

AVR UNIT (X43-3070-01) Foil side view

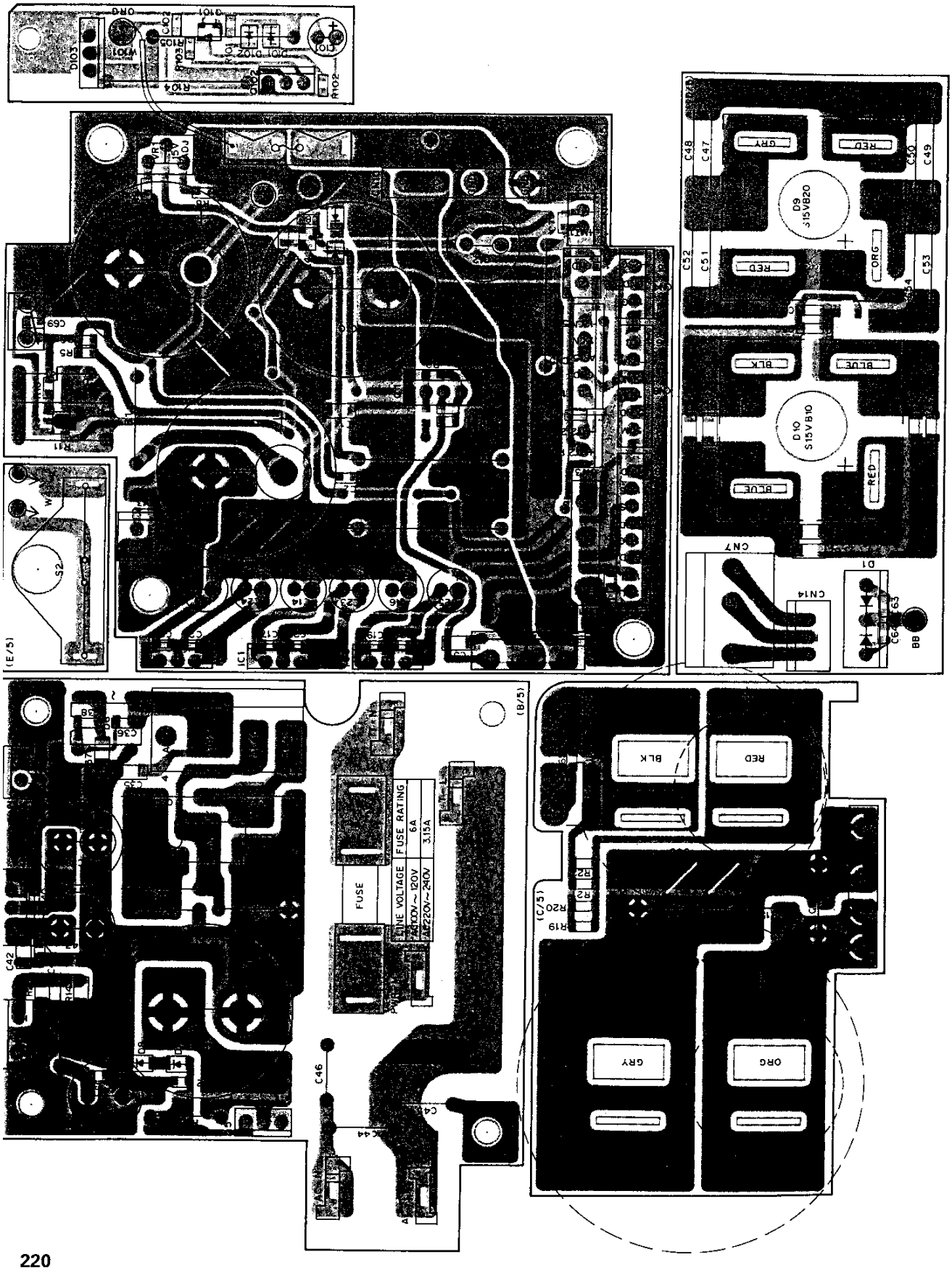

AVR UNIT (X43-3070-01)

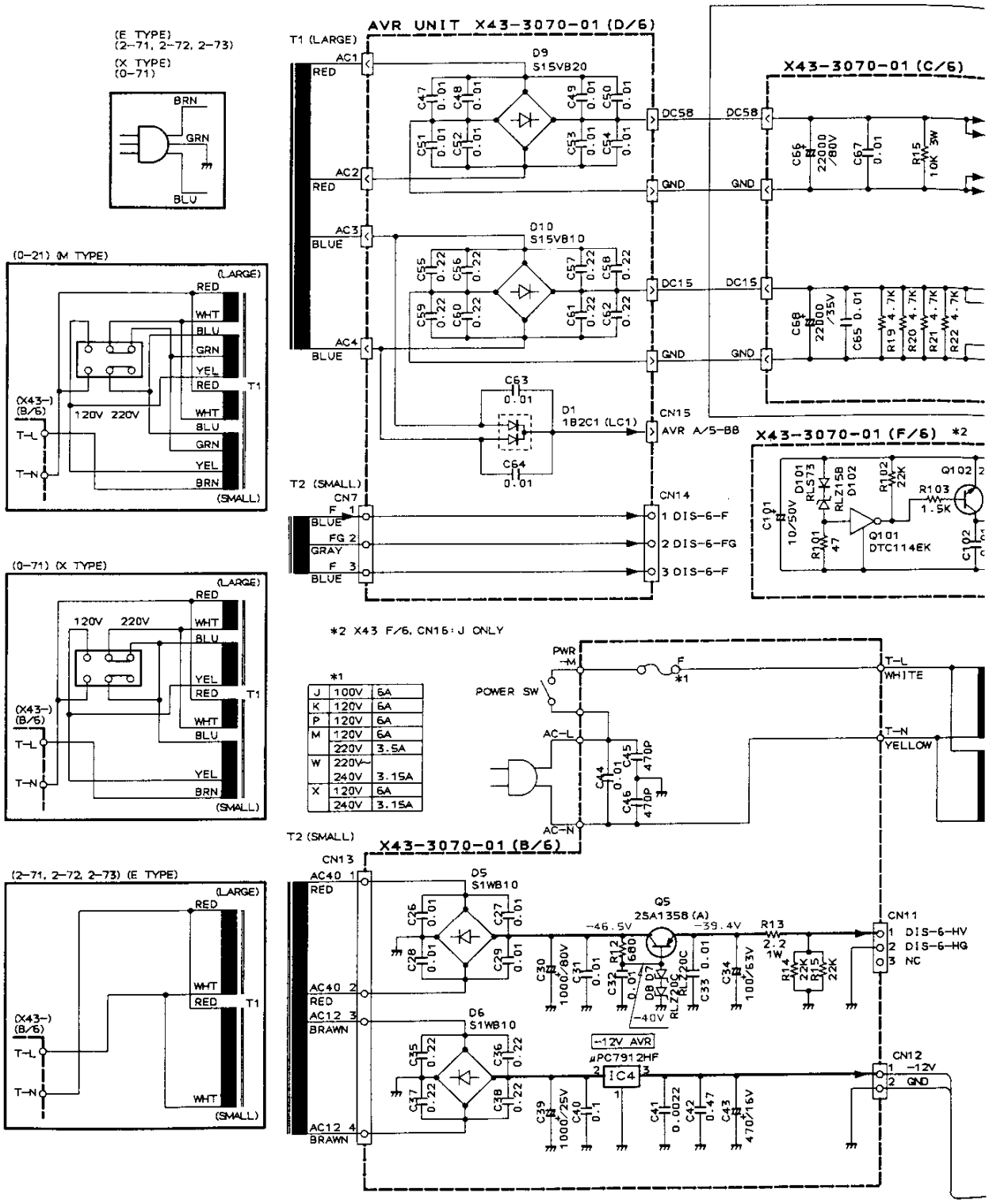

2SC2712
2SC3907
DTC114EK

2SA1358

2SB941

2SD1624

μPC7805H

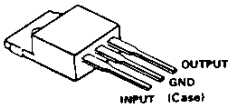

μPC7912HF

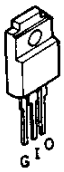

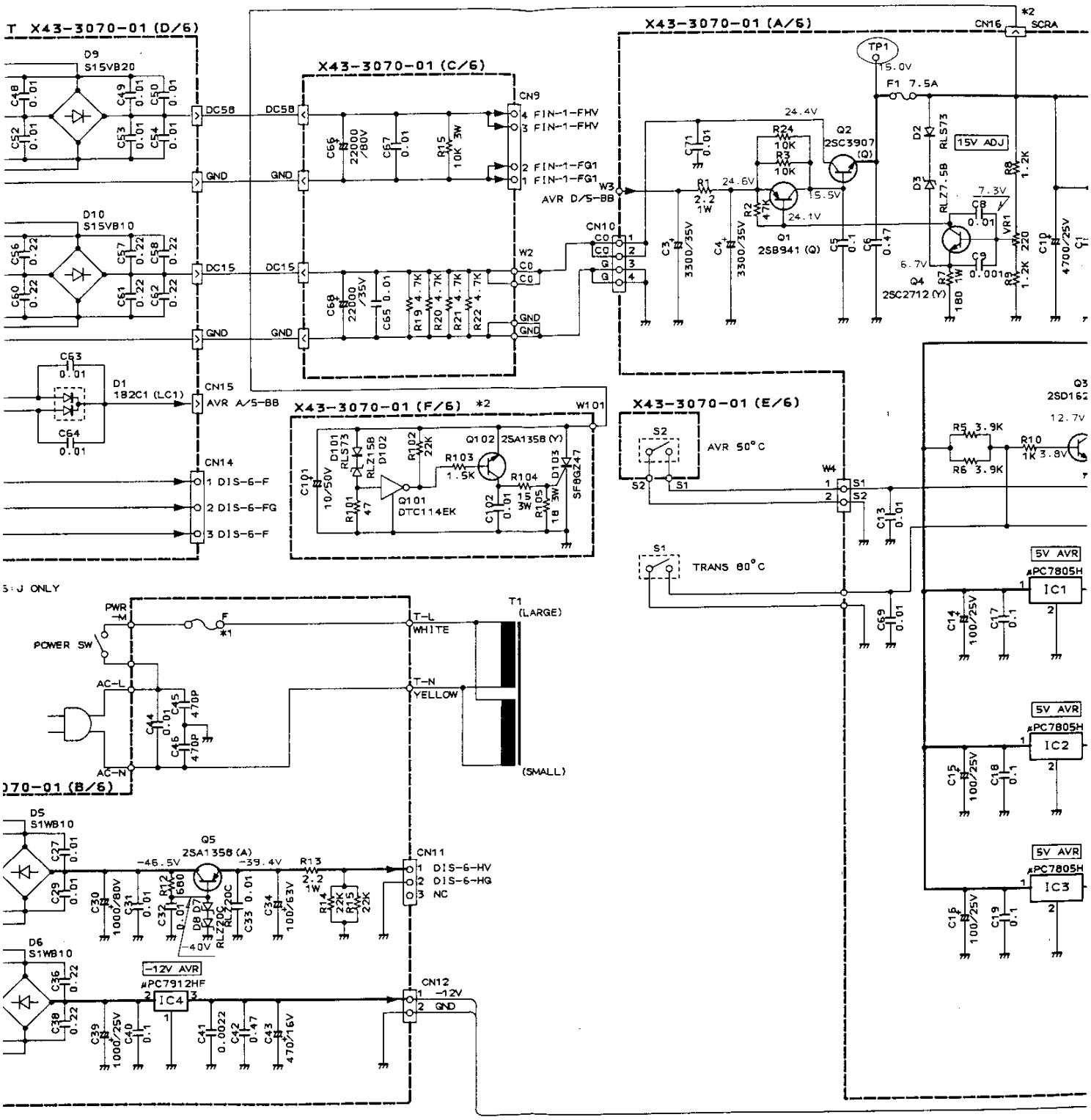

2SD1624

μPC7805H

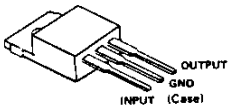

μPC7912HF

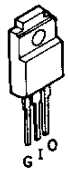

CIRCUIT DIAGRAM TS-950SDX

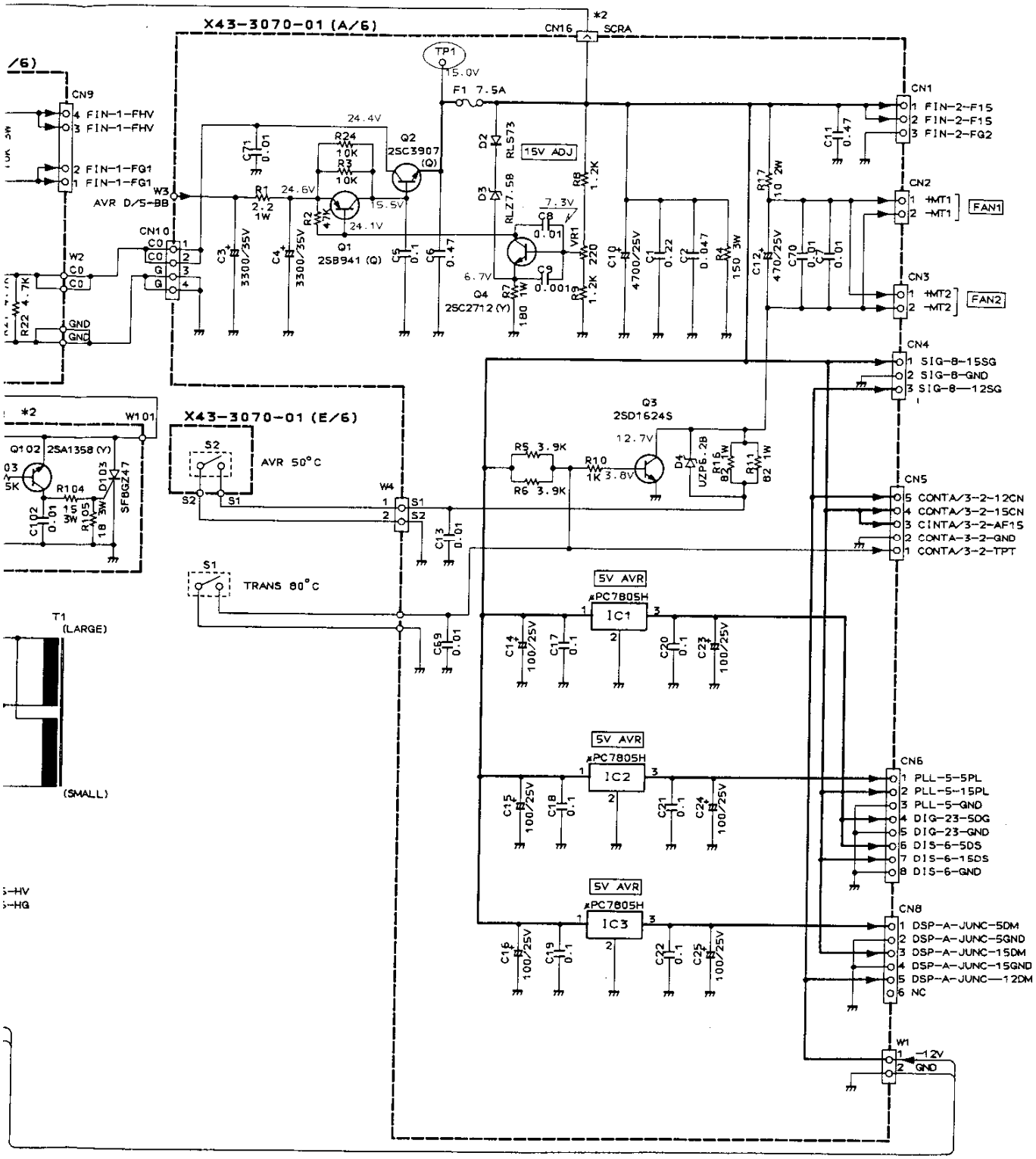

12HF

TS-950SDX PC BOARD VIEWS

RF UNIT (X44-3140-00) Component side view

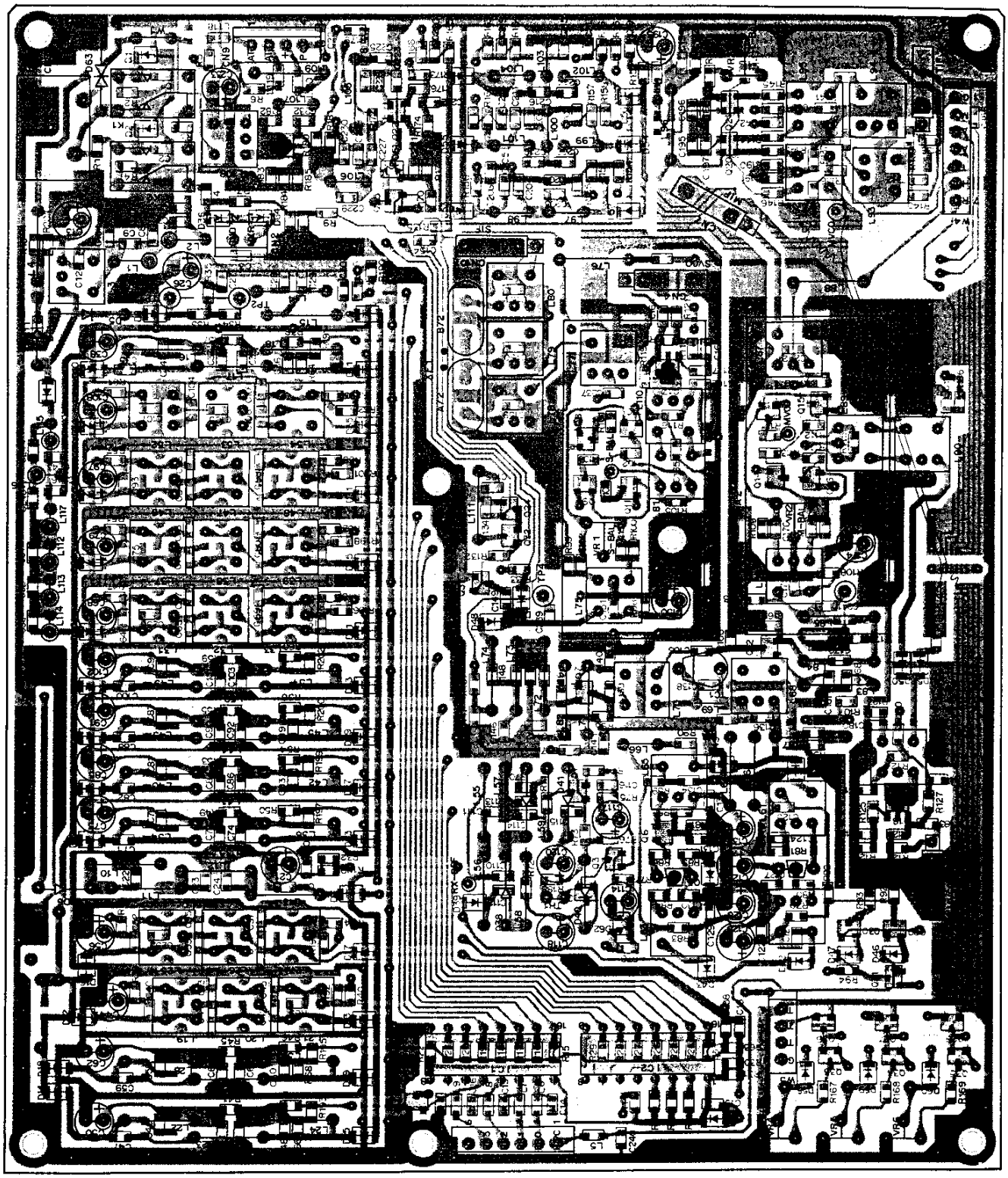

2SA1162
2SC2712
2SC2954
DTA114EK
DTA124EK
DTC114EK
DTC124EK

2SC2954

2SK125-5

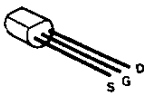

3SK131

RF UNIT (X44-3140-00) Foil side view

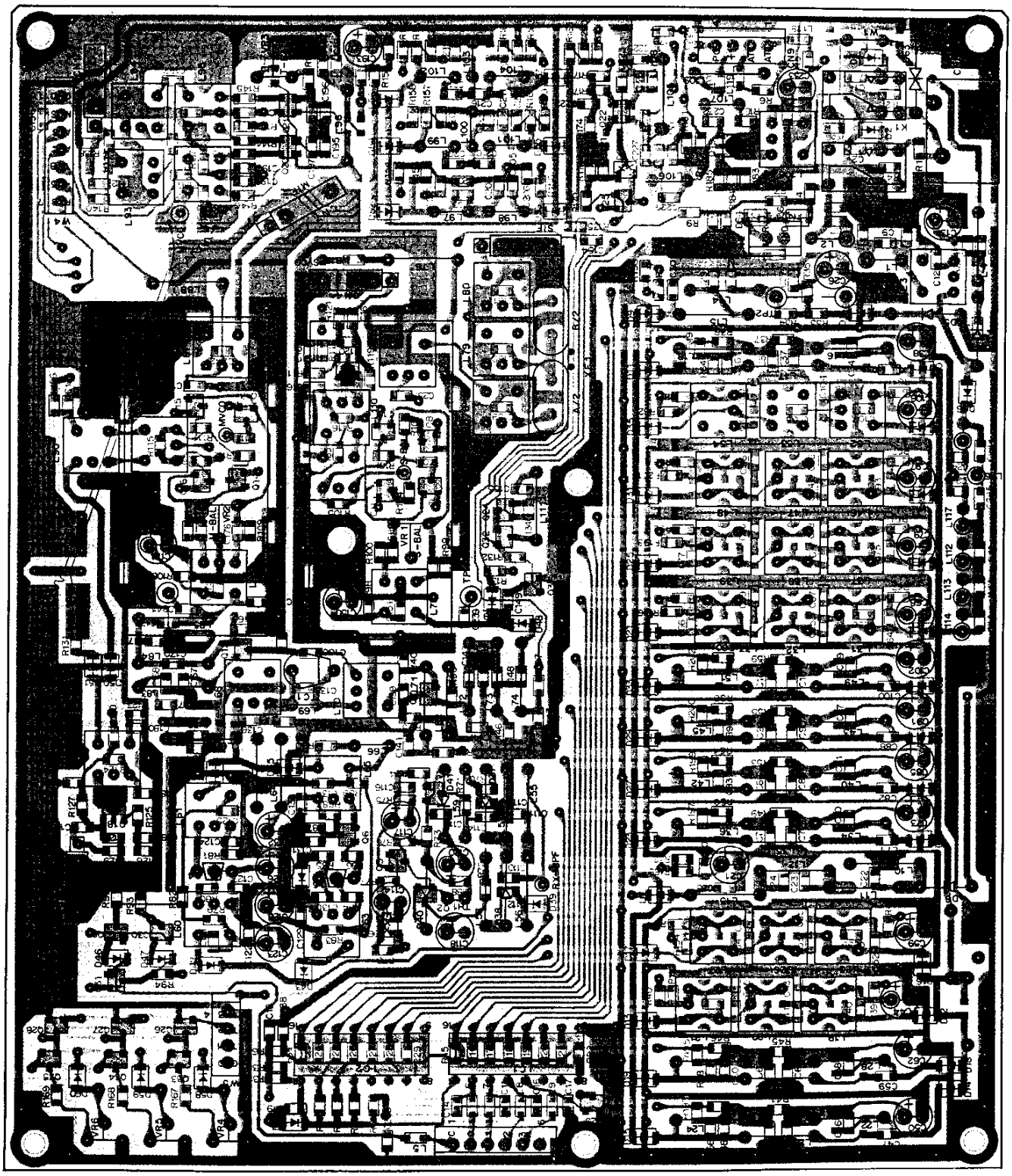

N74LS145N

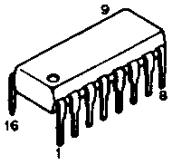

2SK520

RF UNIT (X44-3140-00)

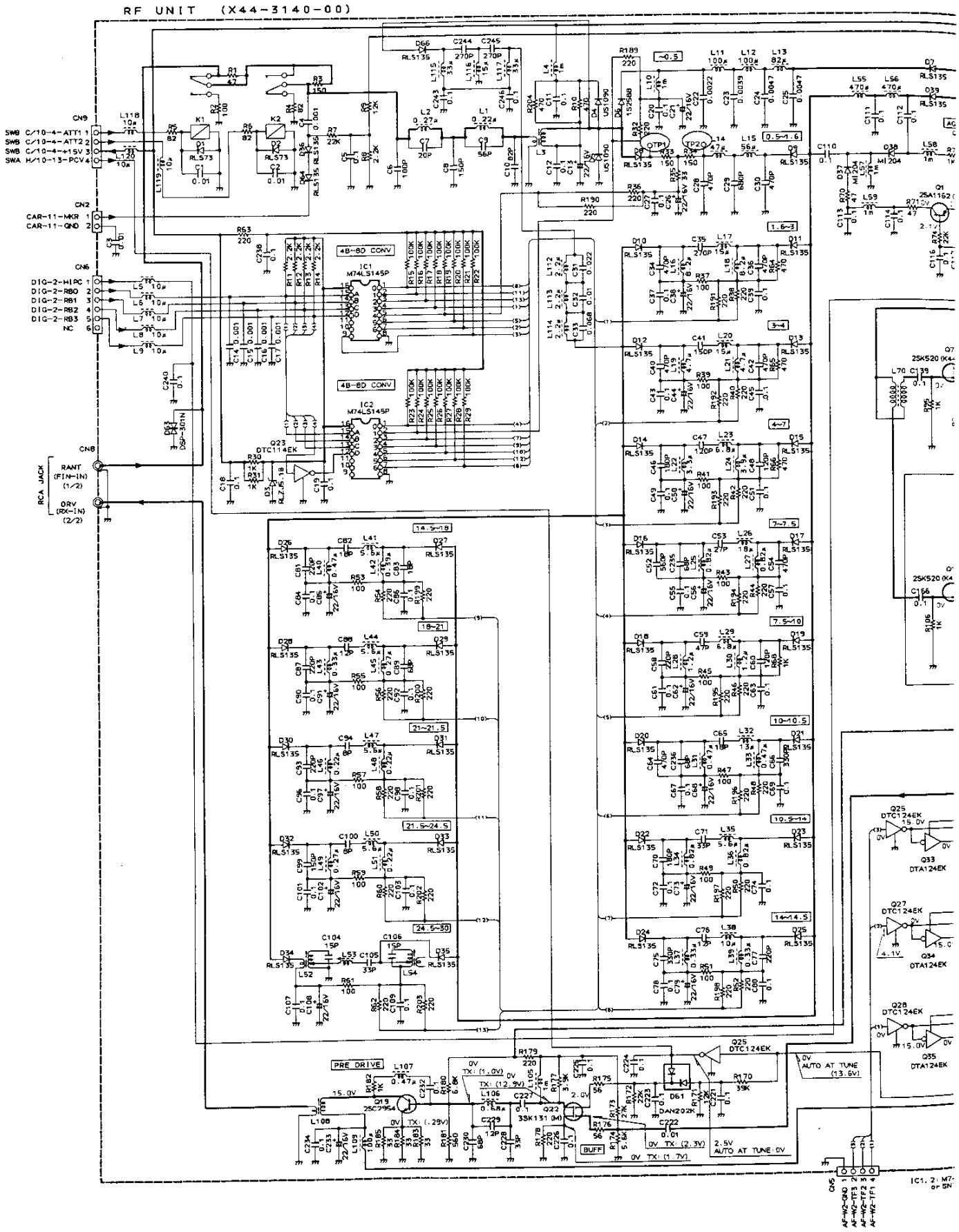

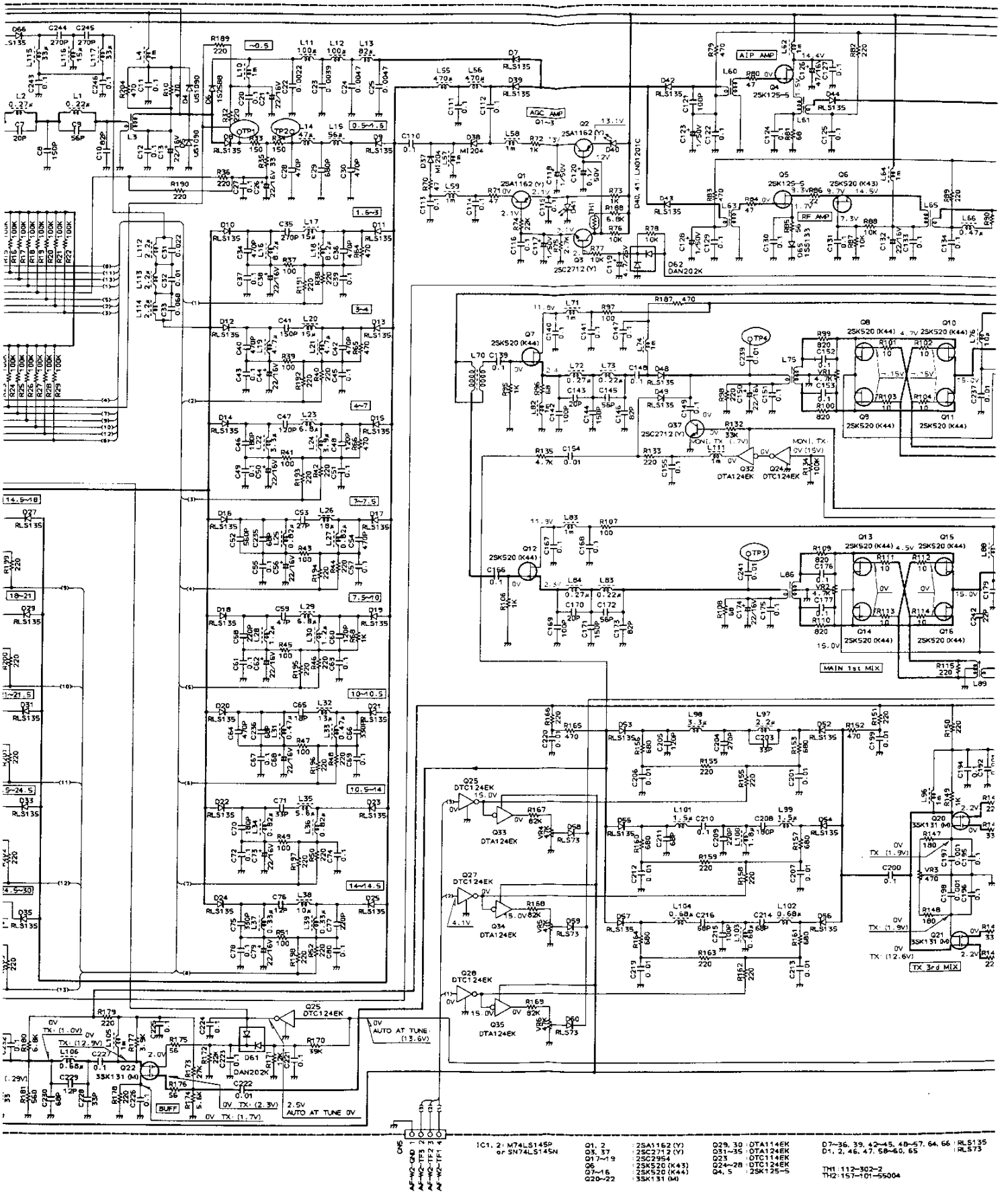
AIP AMP
AGC AMP
RF AMP
MAIN 1st MIX
TX 3rd MIX
AUTO AT TUNE (13.6V)
AUTO AT TUNE 0V
BUFF
IC1, 2: M74LS145P or SN74LS145N
Q1, 2 : 2SA1162 (Y)
Q3, 37 : 2SC2712 (Y)
Q17~19 : 2SC2954
Q6 : 2SK520 (K43)
Q7~16 : 2SK520 (K44)
Q20~22 : 3SK131 (M)
Q29, 30 : DTA114EK
Q31~35 : DTA124EK
Q23 : DTC114EK
Q24~28 : DTC124EK
Q4, 5 : 2SK125-5
D7~36, 39, 42~45, 48~57, 64, 66 : RLS135
D1, 2, 46, 47, 58~60, 65 : RLS73
TH1 : 112-302-2
TH2 : 157-101-55004

CIRCUIT DIAGRAM TS-950SDX

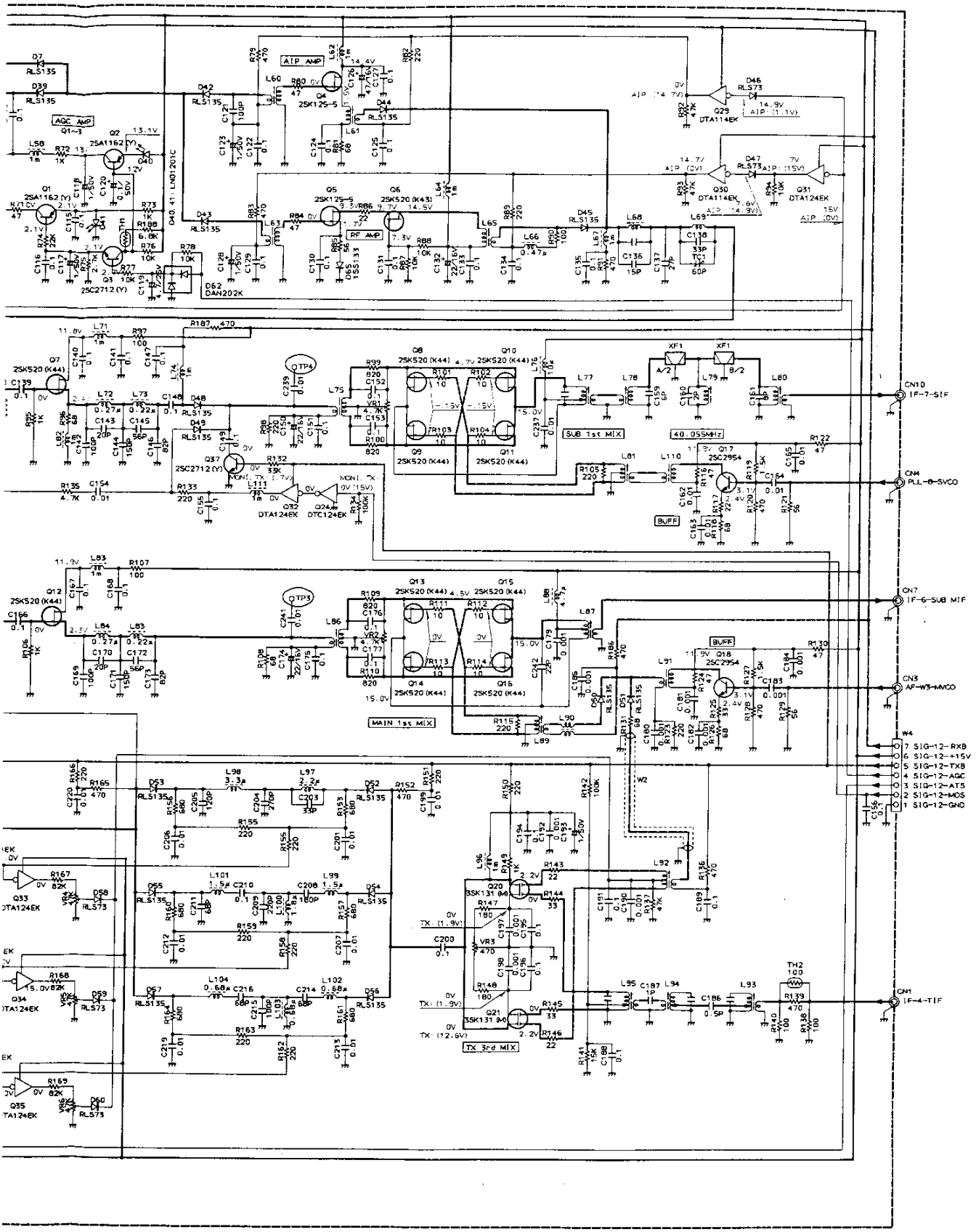

1, 2: M74LS145P or SN74LS145N

Q1, 2	: 2SA1162 (Y)	Q29, 30	: DTA114EK	D7~36, 39, 42~45, 48~57, 64, 66	: RLS135	D3	: RLZJS.18
Q3, 37	: 2SC2712 (Y)	Q31~35	: DTA114EK	D1, 2, 46, 47, 58~60, 65	: RLS73	D61, 62	: DAN202K
Q17~19	: 2SC2954	Q23	: DTC114EK			D4, 5	: US1090
Q6	: 2SK520 (K43)	Q24~28	: DTC124EK	TH1 : 112-302-2		D40, 41	: LN01201C
Q7~16	: 2SK520 (K44)	Q4, 5	: 2SK125-5	TH2 : 157-101-55004		D37, 38	: MI204
Q20~22	: 3SK131 (M)					D63	: DSP-301N
						D6	: 1S2588

TS-950SDX CIRCUIT DIAGRAM

FINAL UNIT (X45-3450-00)

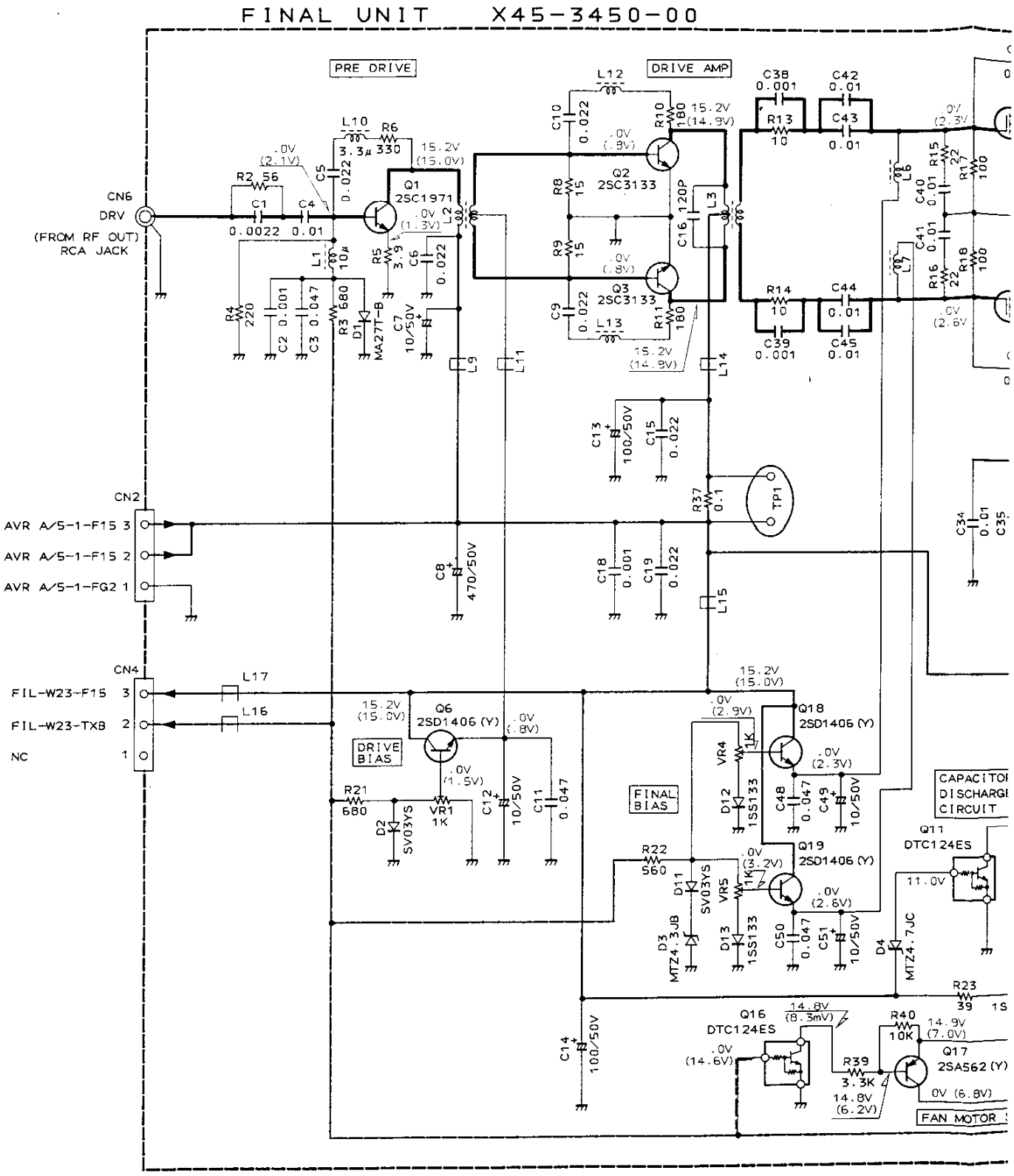

Q1 : 2SC1971
Q2, 3 : 2SC3133
Q4 : MRF150MP
Q6, 18, 19 : 2SD1406 (Y)
Q8 : 2SC2922
Q9 : 2SB861 (C)
Q10 : 2SC2459 (BL)
Q11, 14, 16 : DTC124ES
Q12 : DTC143TS
Q13, 17 : 2SA562 (Y)
Q15 : DSTA124ES
D1 : MA27T-B
D2, 11 : SV03YS
D3 : MTZ4.3JB
D4 : MTZ4.7JC
D5, 6, 9 : 1S1555
D7 : MC921
D8 : MTZ8.2JC
D10 : UZP4.7B
D12, 13 : 1SS133

45-3450-00

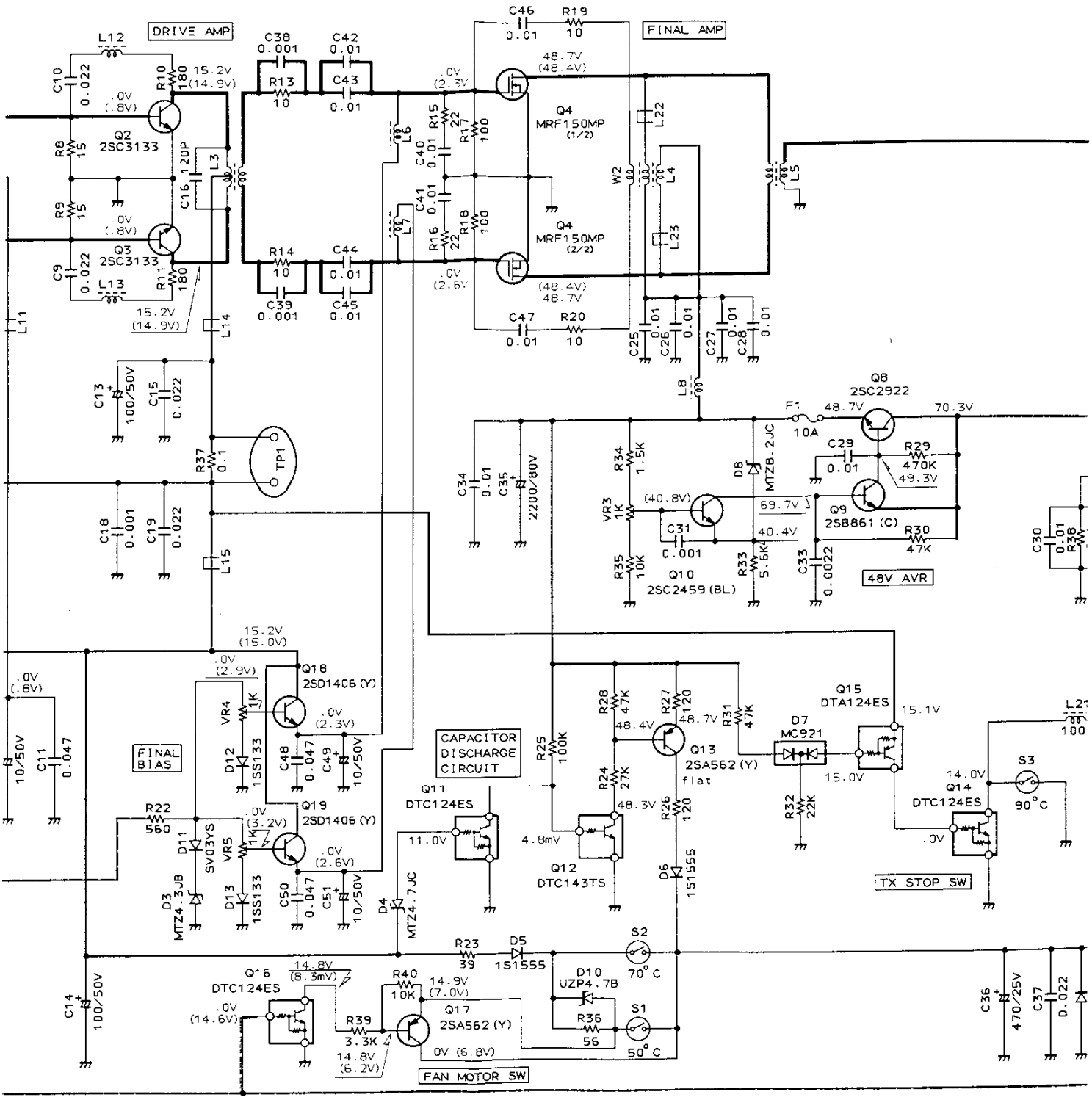

C124ES	D1 :MA27T-B	D10 :UZP4.7B
3TS	D2, 11 :SV03YS	D12, 13:1SS133
2(Y)	D3 :MTZ4.3JB	
24ES	D4 :MTZ4.7JC	
	D5, 6, 9:1S1555	
	D7 :MC921	
	D8 :MTZ8.2JC	

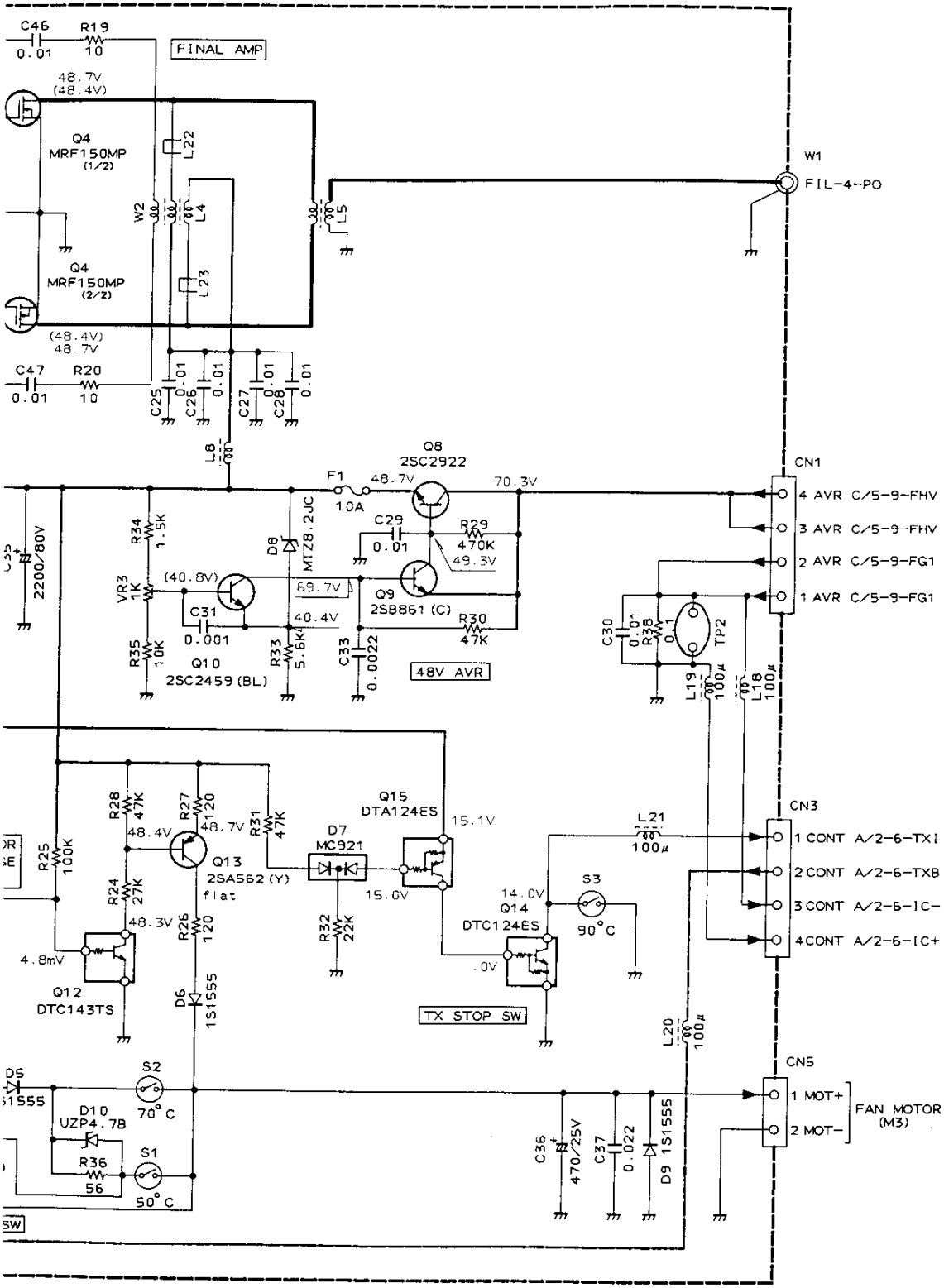
FINAL AMP
C46 0.01
R19 10
48.7V (48.4V)
Q4 MRF150MP (1/2)
Q4 MRF150MP (2/2)
(48.4V) 48.7V
C47 0.01
R20 10
C25 0.01
C26 0.01
C27 0.01
C28 0.01
L22
L23
L4
L5
W2
W1
FIL-4-PO
L8
F1 10A
48.7V
Q8 2SC2922
70.3V
C29 0.01
R29 470K
49.3V
Q9 2SB861 (C)
R30 47K
D8 MTZ8.2JC
69.7V
40.4V
(40.8V)
C31 0.001
Q10 2SC2459 (BL)
R34 1.5K
VR3 1K
R35 10K
R33 5.6K
C33 0.0022
48V AVR
2200/80V
CN1
4 AVR C/5-9-FHV
3 AVR C/5-9-FHV
2 AVR C/5-9-FG1
1 AVR C/5-9-FG1
C30 0.01
R38 0
TP2
L19 100μ
L18 100μ
R28 47K
R27 120
48.4V
48.7V
Q13 2SA562 (Y) flat
R31 47K
D7 MC921
Q15 DTA124ES
15.1V
15.0V
R32 22K
R25 100K
R24 27K
48.3V
R26 120
4.8mV
Q12 DTC143TS
D6 1S1555
L21 100μ
14.0V
Q14 DTC124ES
.0V
S3 90°C
TX STOP SW
CN3
1 CONT A/2-6-TXI
2 CONT A/2-6-TXB
3 CONT A/2-6-IC-
4 CONT A/2-6-IC+
L20 100μ
CN5
1 MOT+
2 MOT-
FAN MOTOR (M3)
S2 70°C
D10 UZP4.7B
R36 56
S1 50°C
C36 470/25V
C37 0.022
D9 1S1555
2SA562
2SB861
2SC1971
DTC124ES
2SD1406
2SC2922
2SC2459
DTA124ES
DTC143TS
2SC3133
MRF150MP

FINAL UNIT (X45-3450-00) Component side view

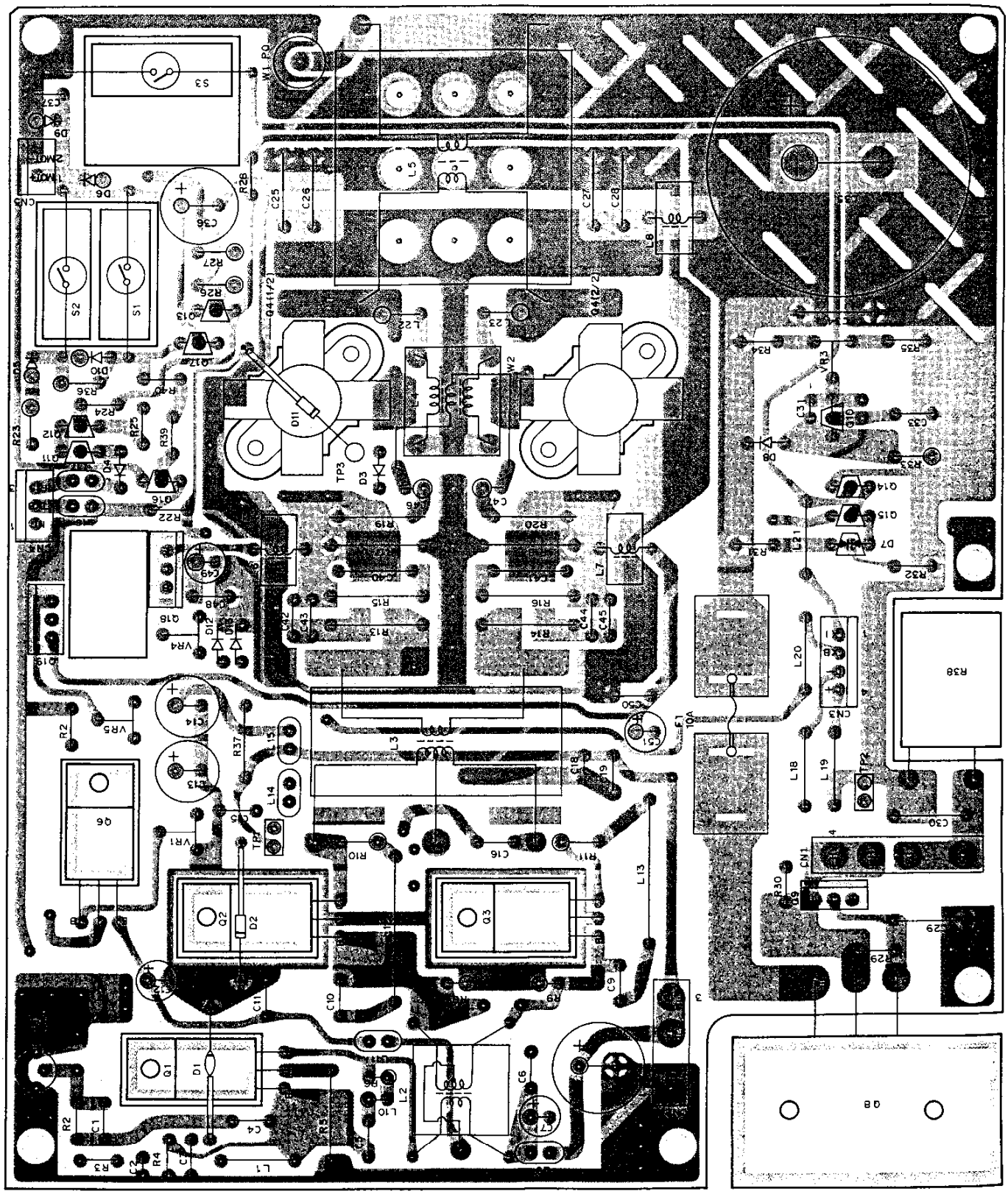

DIGITAL UNIT (X46-313X-XX) Co

0-11 : K,P 0-21 : M 0-71 : X 2-71 : E,

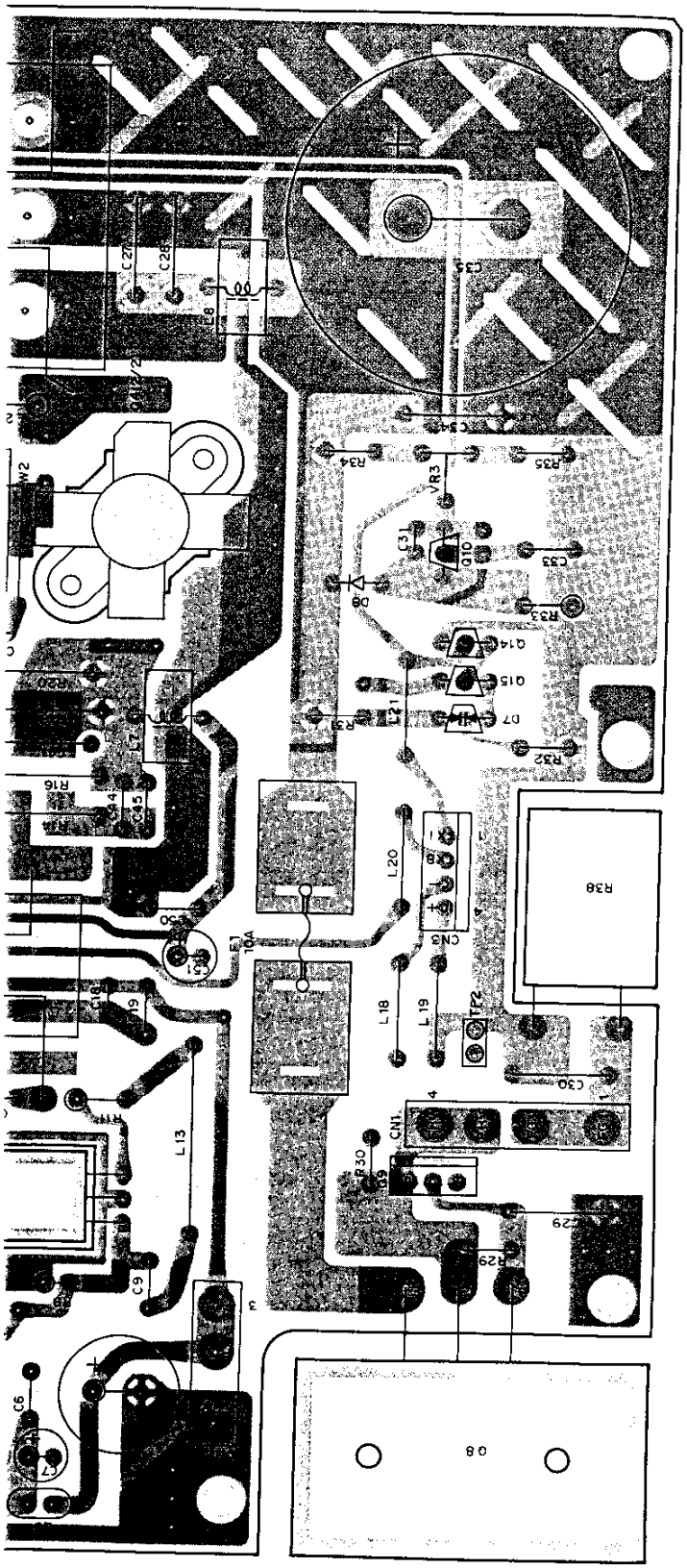

DTC143EK

FMC3
FMG1

TC4S81F
TC4SU69F
TC7S08F

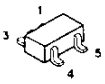

NJM2904M
NM93C66EM83

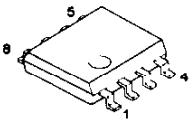

TC74HC138AF
TC74HC148AF
TC4053BF

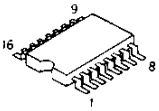

TC4011BF
TC4584BF

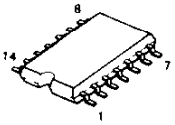

MB4052

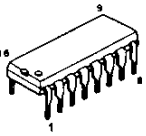

LZ92K371

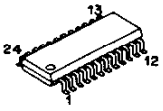

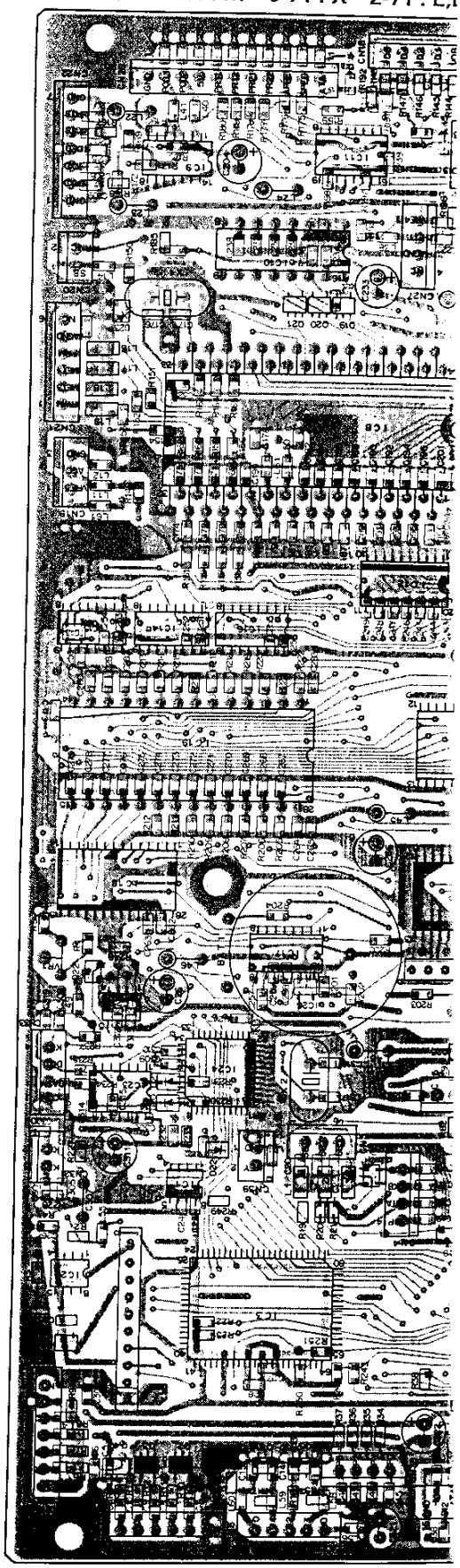

GITAL UNIT (X46-313X-XX) Component side view

11 : K,P 0-21 : M 0-71 : X 2-71 : E,E3,T 2-72 : E2

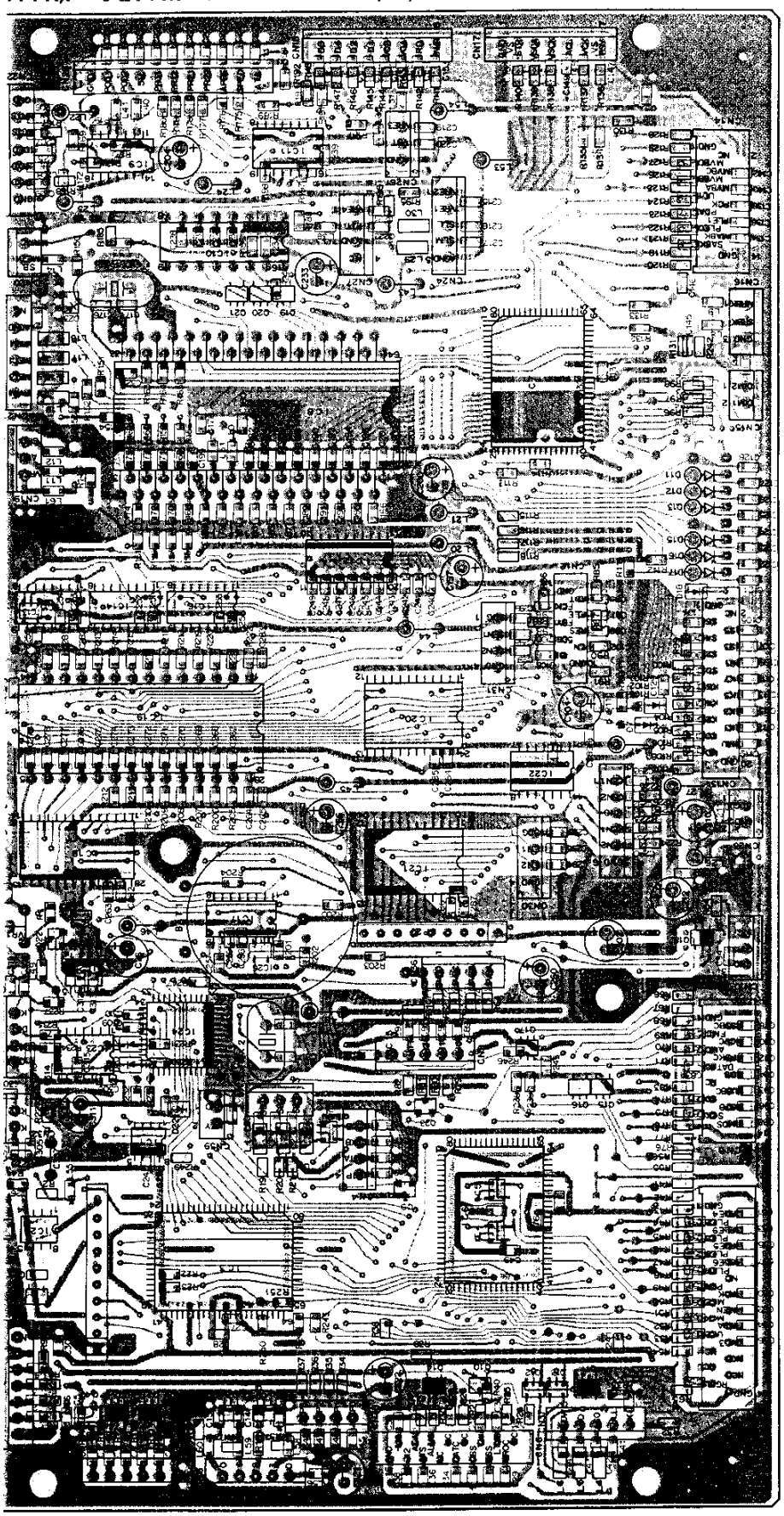

SN74AS04NS

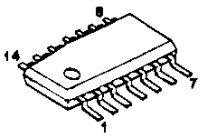

MB3780A

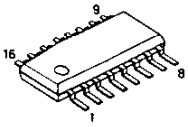

TC74HC573AF

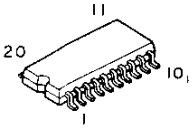

LC3564PML-12

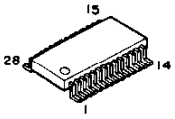

MB89363B

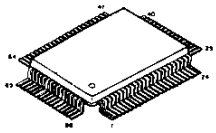

µPD78C10AGQ-36

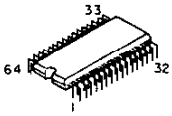

75004GB-746-3B4

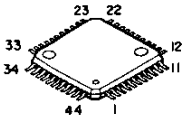

M27C512B-15

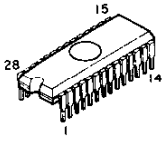

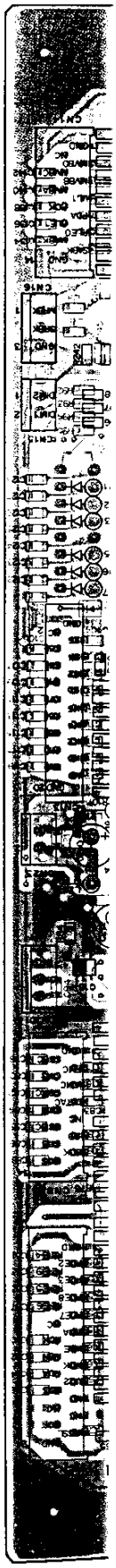

PC BOARD VIEWS TS-950SDX

DIGITAL UNIT (X46-313X-XX) Foil side view

0-11 : K,P 0-21 : M 0-71 : X 2-71 : E,E3,T 2-72 : E2

SN74AS04NS

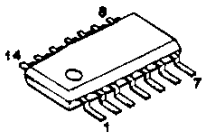

MB3780A

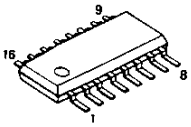

TC74HC573AF

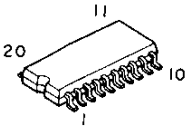

LC3564PML-12

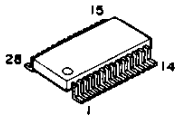

MB89363B

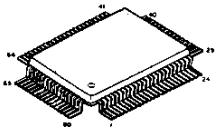

µPD78C10AGQ-36

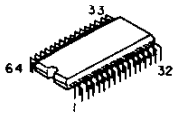

75004GB-746-3B4

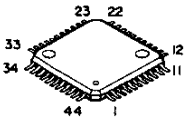

M27C512B-15

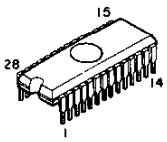

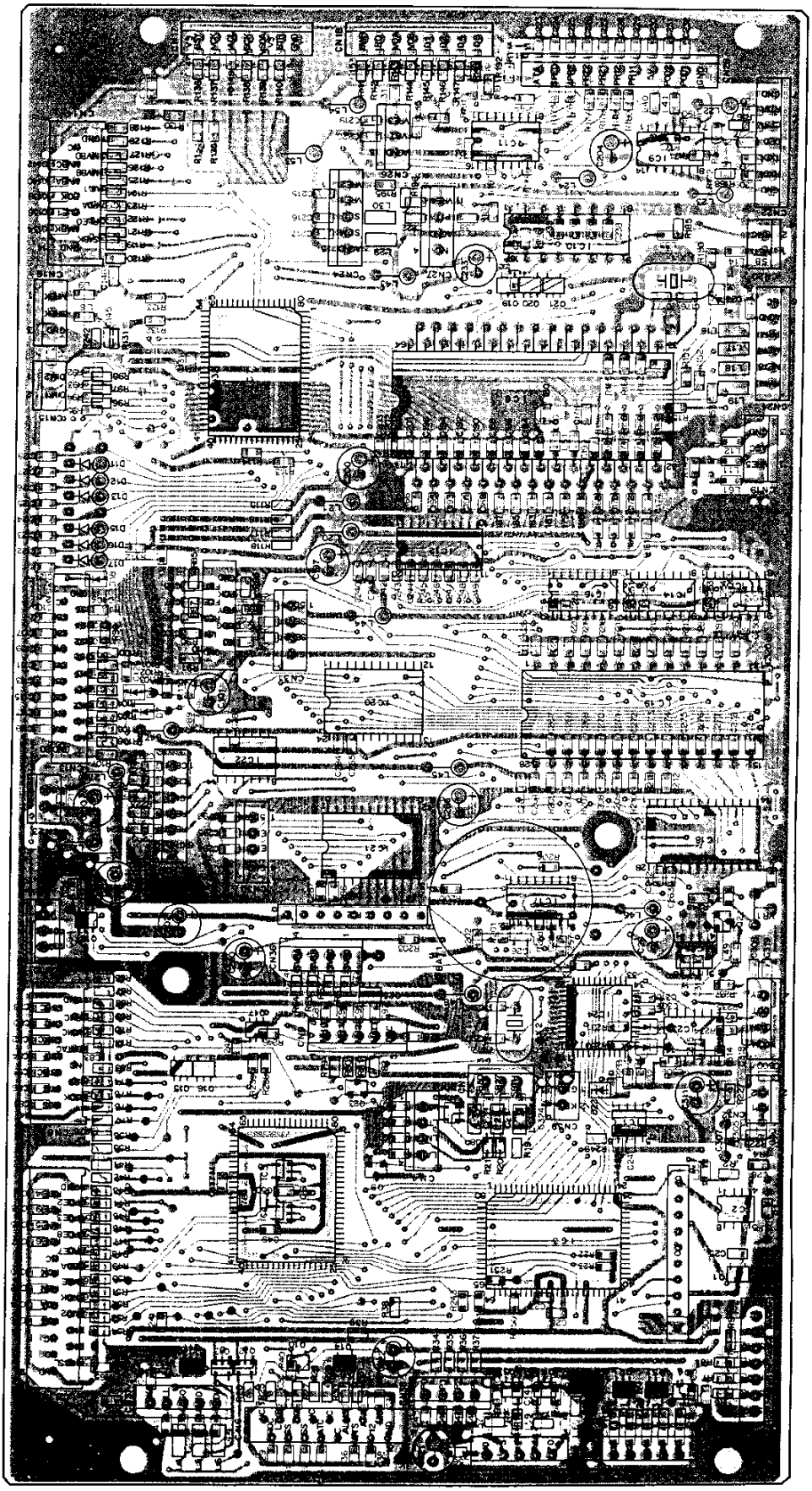

TS-950SDX CIRCUIT DIAGRAM

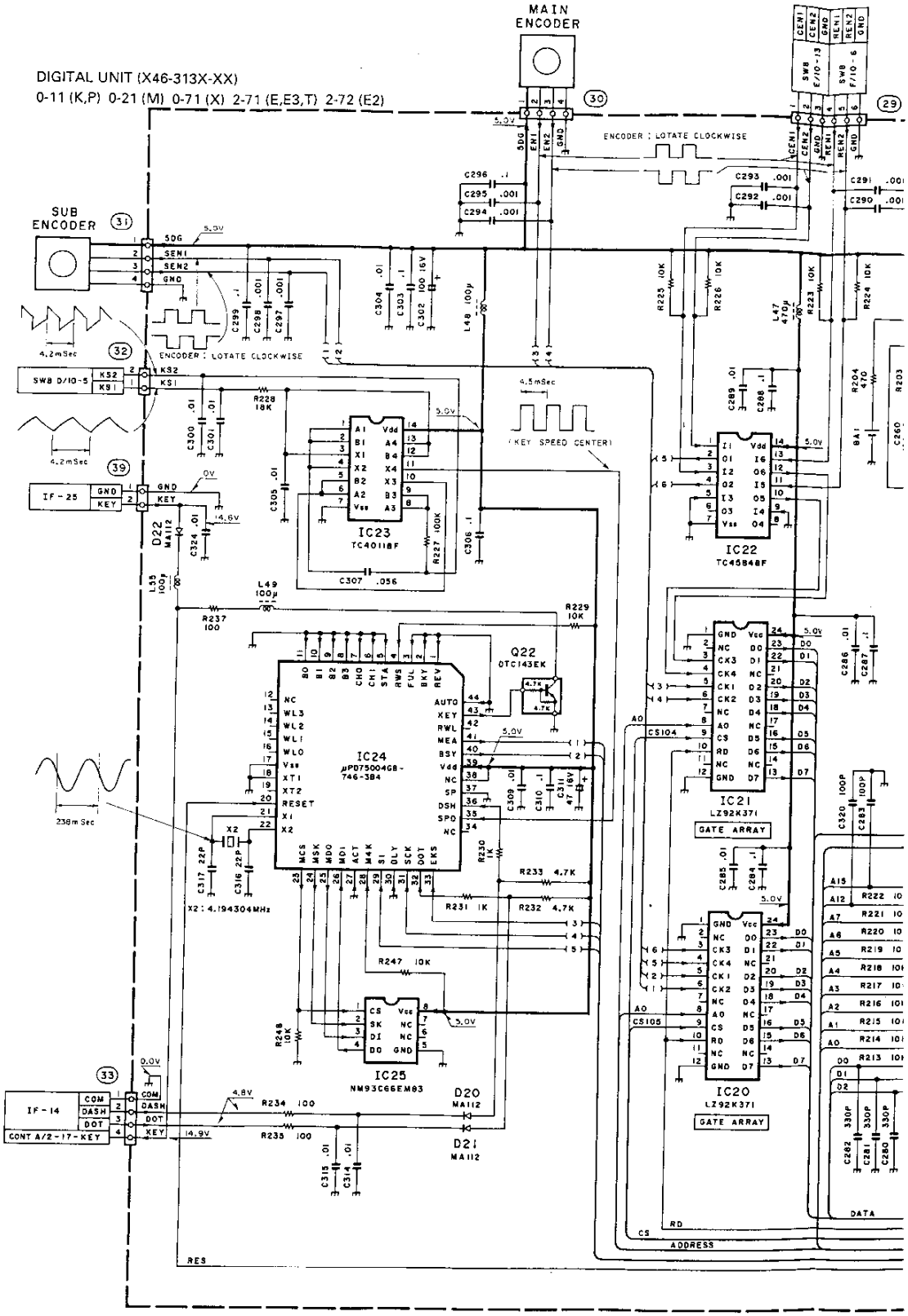

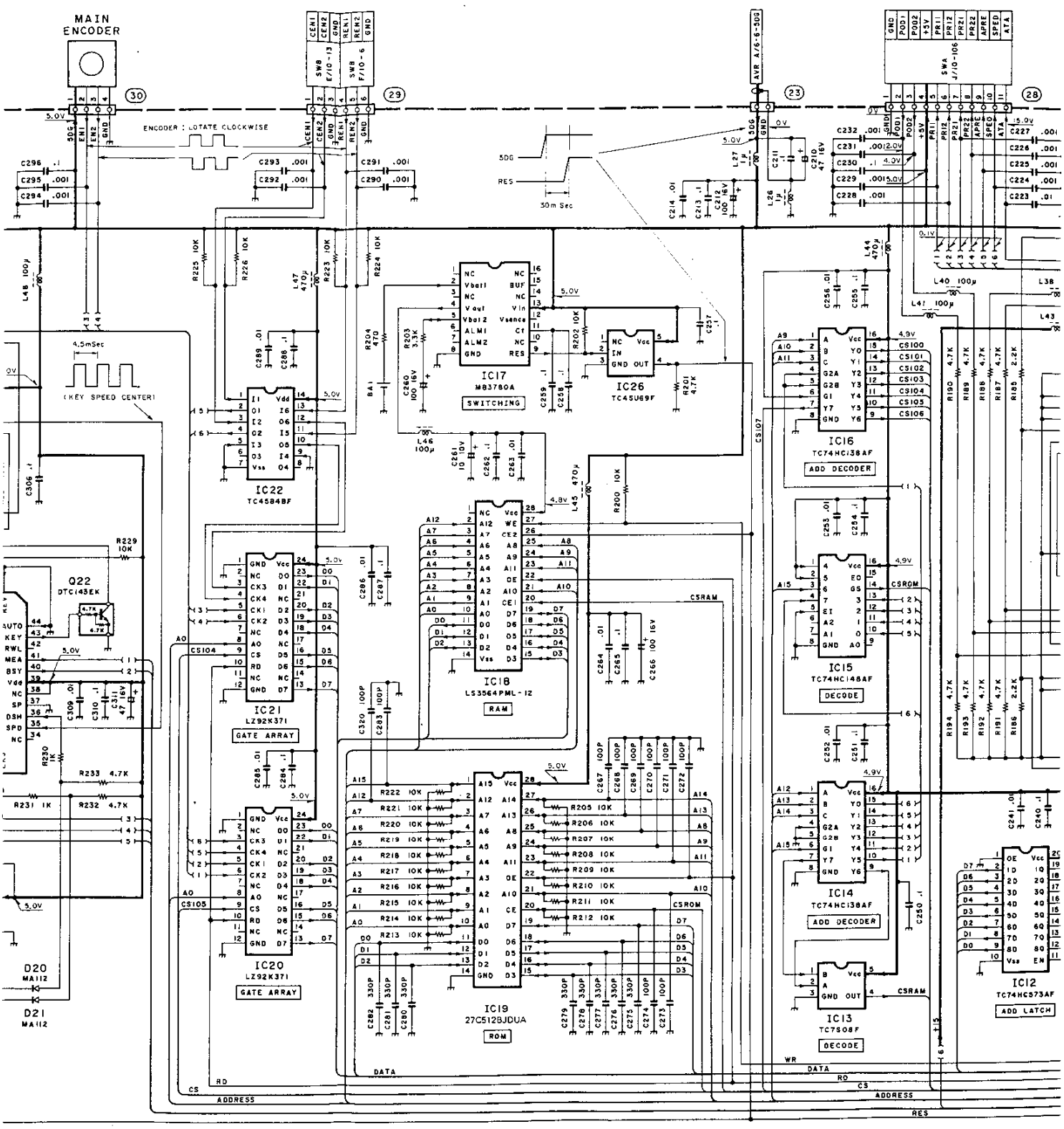
MAIN ENCODER
ENCODER : ROTATE CLOCKWISE
(KEY SPEED CENTER)
IC17
M83780A
SWITCHING
IC26
TC4SU69F
IC22
TC4584BF
IC16
TC74HC138AF
ADD DECODER
IC18
LS3564PML-12
RAM
IC21
LZ92K371
GATE ARRAY
IC15
TC74HC148AF
DECODE
IC20
LZ92K371
GATE ARRAY
IC14
TC74HC138AF
ADD DECODER
IC19
27C512BJDUA
ROM
IC13
TC7S08F
DECODE
IC12
TC74HC573AF
ADD LATCH
Q22
DTC143EK
D20
MA112
D21
MA112
ADDRESS
DATA
RD
WR
CS
RES
CSROM
CSRAM

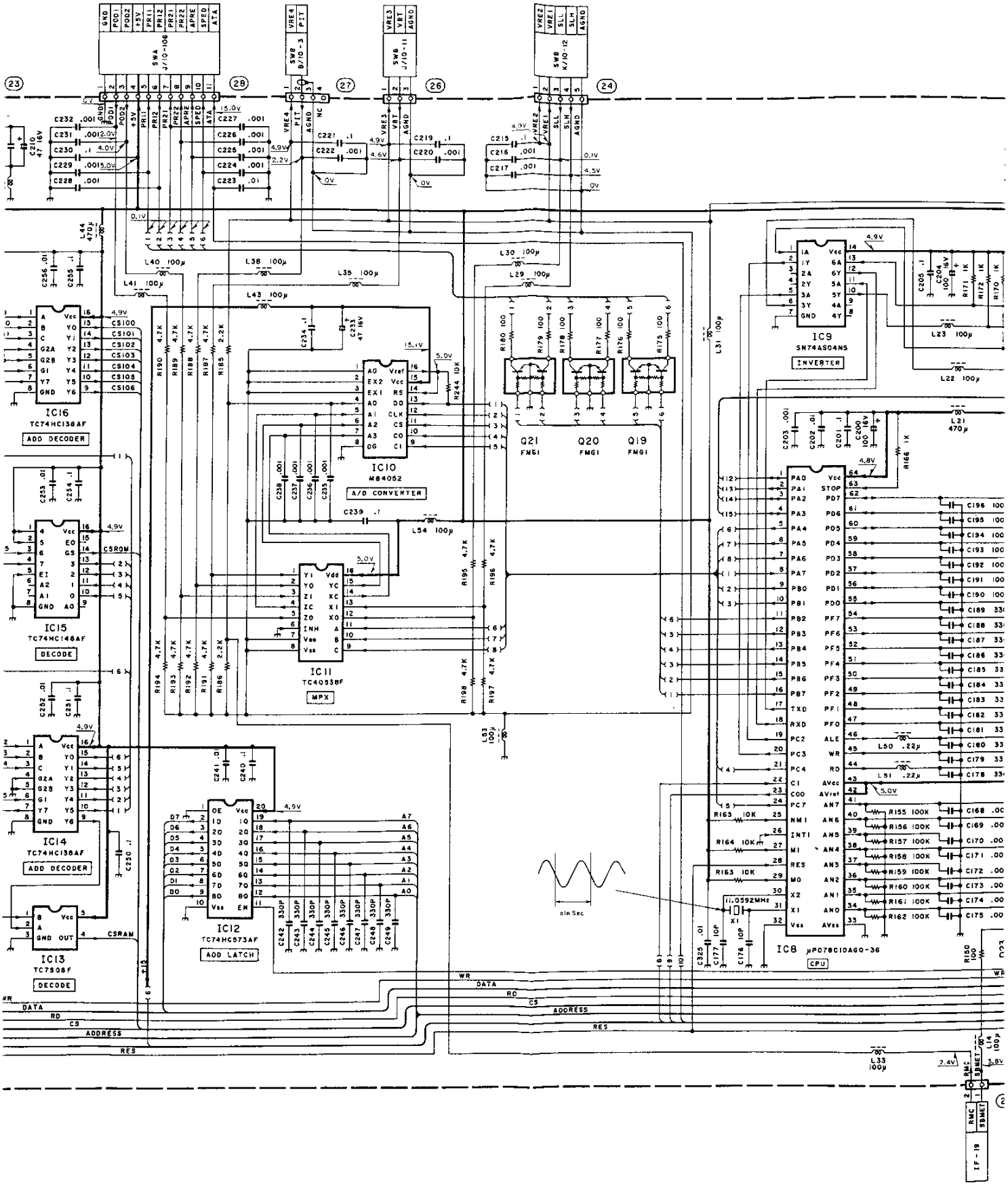
IC16
TC74HC138AF
ADD DECODER
IC15
TC74HC148AF
DECODE
IC14
TC74HC138AF
ADD DECODER
IC13
TC7S08F
DECODE
IC12
TC74HC573AF
ADD LATCH
IC11
TC4053BF
MPX
IC10
M84052
A/D CONVERTER
IC9
SN74AS04NS
INVERTER
IC8
μPD78C10AGQ-36
CPU
Q21
FMG1
Q20
FMG1
Q19
FMG1
11.0592MHz
WR
DATA
RD
CS
ADDRESS
RES
CSROM
CSRAM

313X-XX) (1/2) 0-11 : K,P 0-21 : M 0-71 : X 2-71 : E,E3,T 2-72 : E2

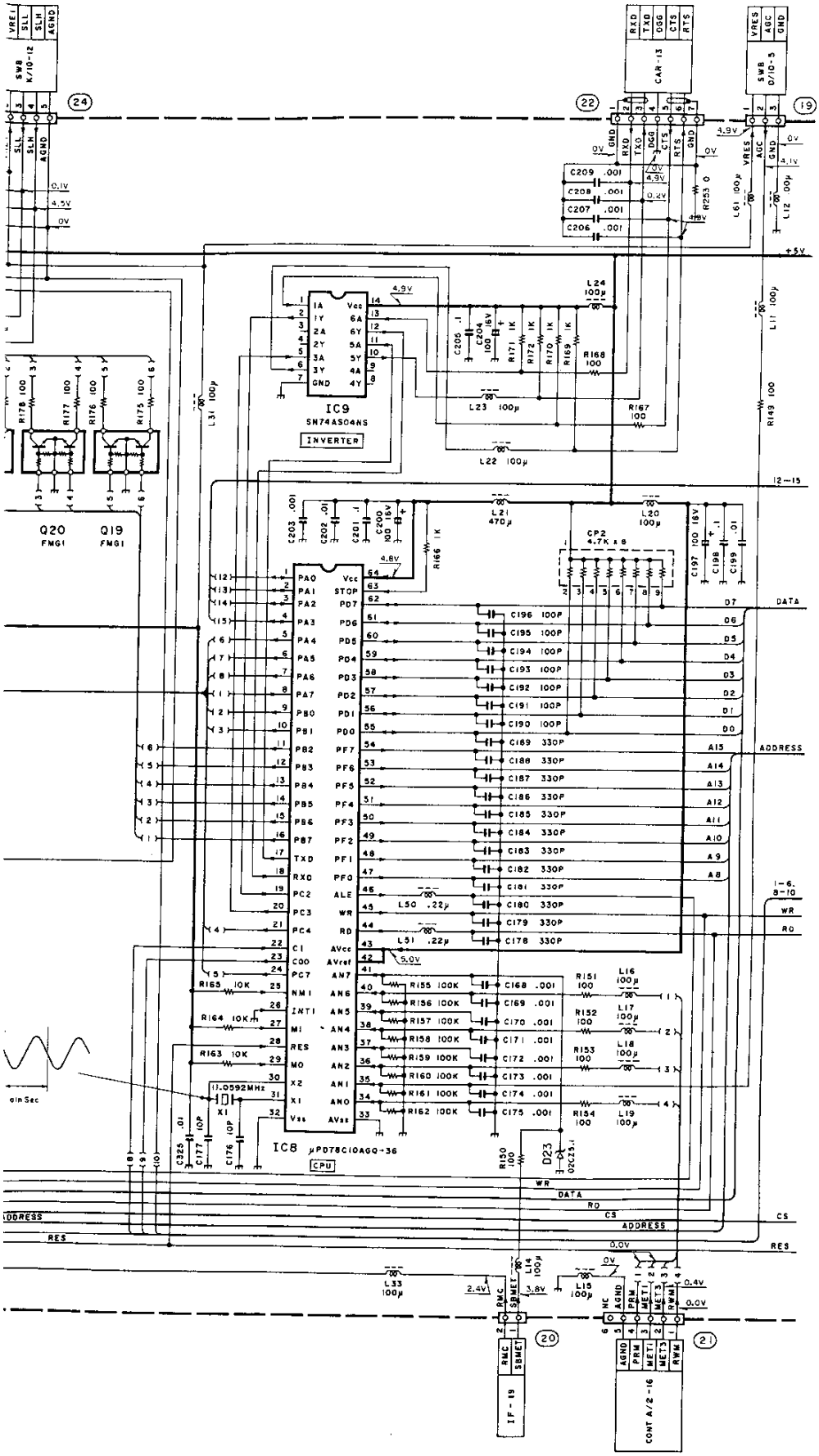

DIGITAL UNIT (X46-313X-XX) (2/2) 0-11 : K,P 0-21 : M 0-71 : X 2-71 : E,E3,T 2-72 : E2

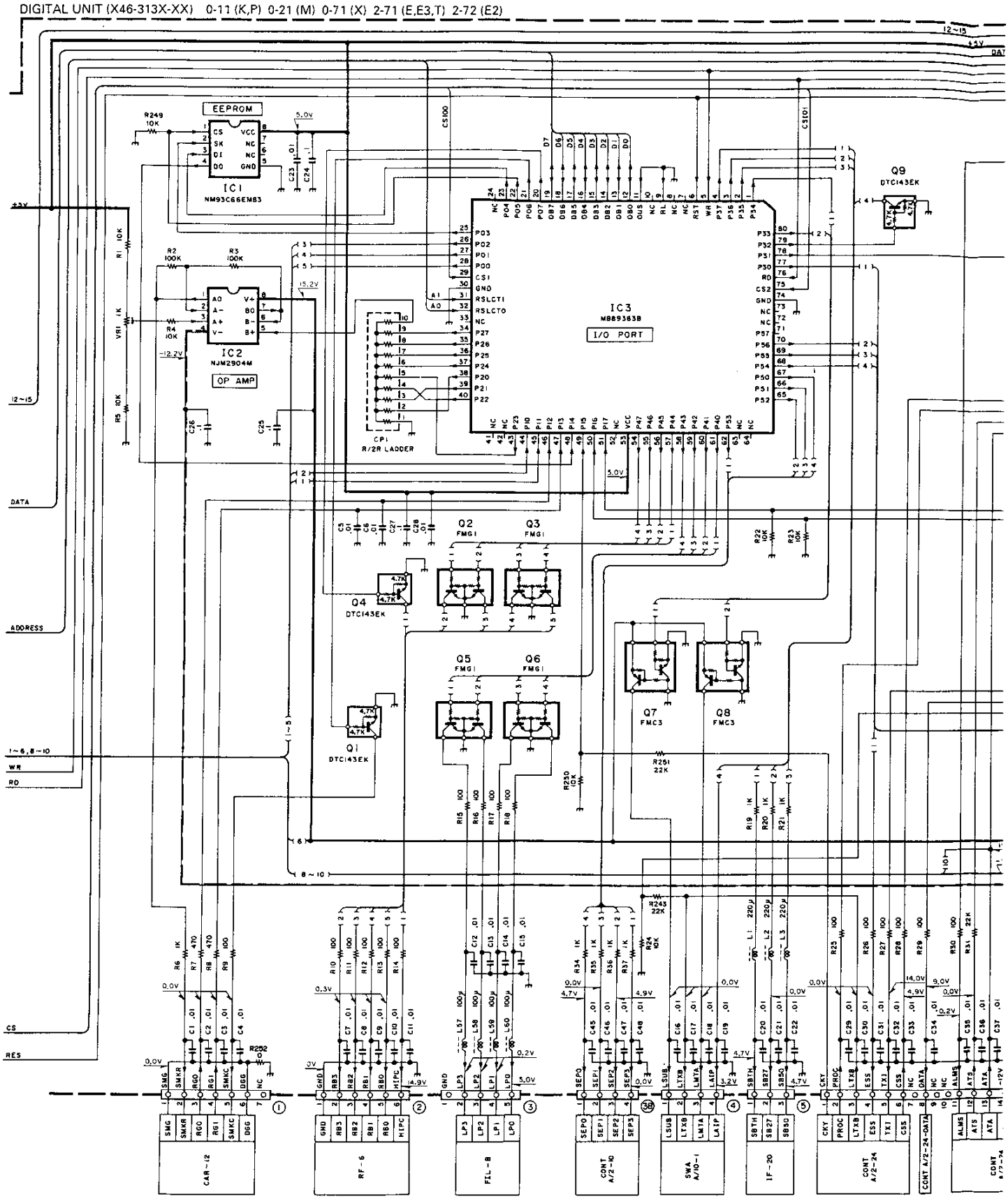

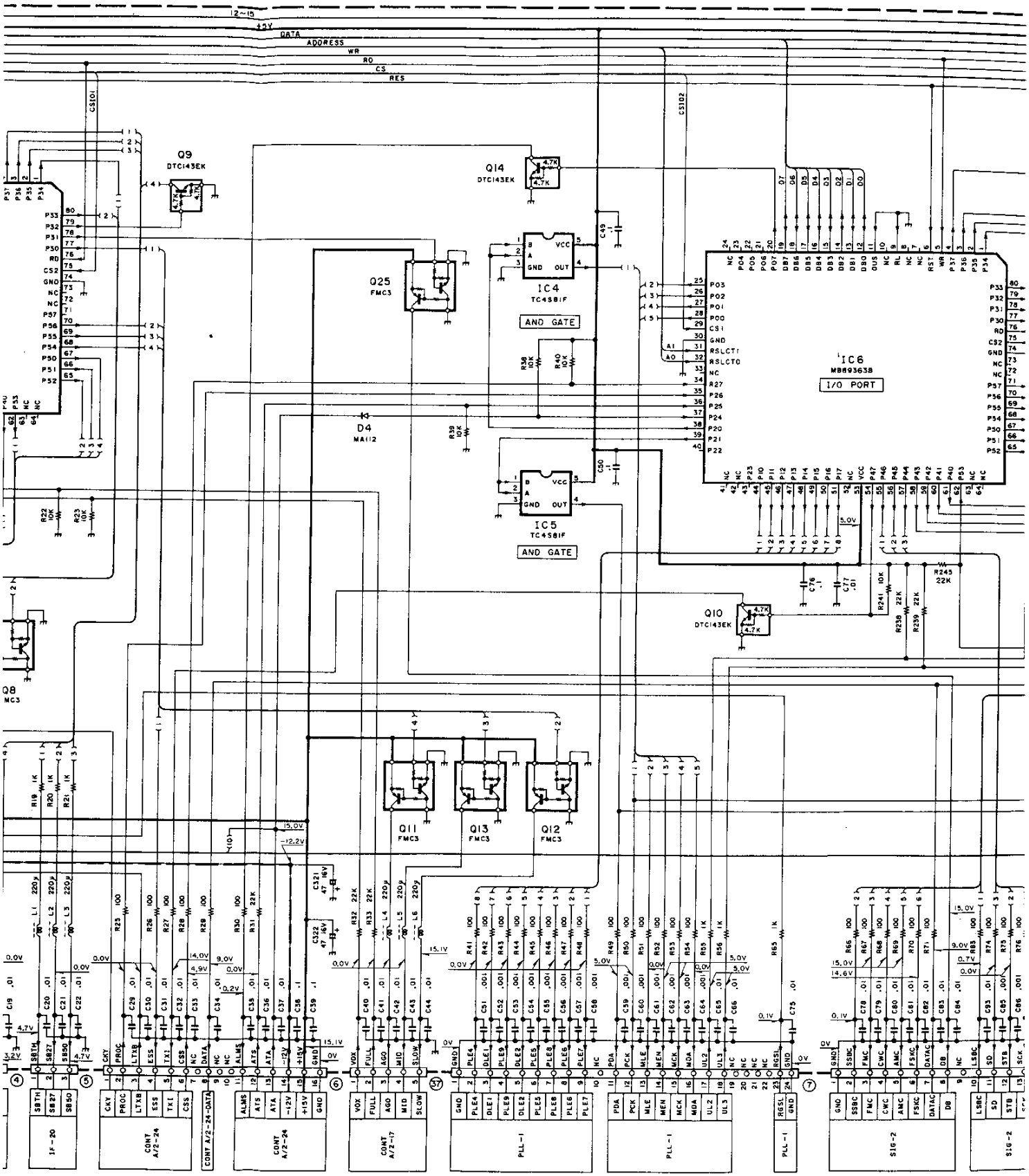
12~15
+5V
DATA
ADDRESS
WR
RD
CS
RES
Q9
DTC143EK
Q14
DTC143EK
Q25
FMC3
IC4
TC4S81F
AND GATE
IC5
TC4S81F
AND GATE
IC6
MB89363B
I/O PORT
D4
MA112
Q10
DTC143EK
Q8
FMC3
Q11
FMC3
Q13
FMC3
Q12
FMC3
IF-20
CONT A/2-24
CONT A/2-24-DATA
CONT A/2-24
CONT A/2-17
PLL-1
PLL-1
PLL-1
SIG-2
SIG-2

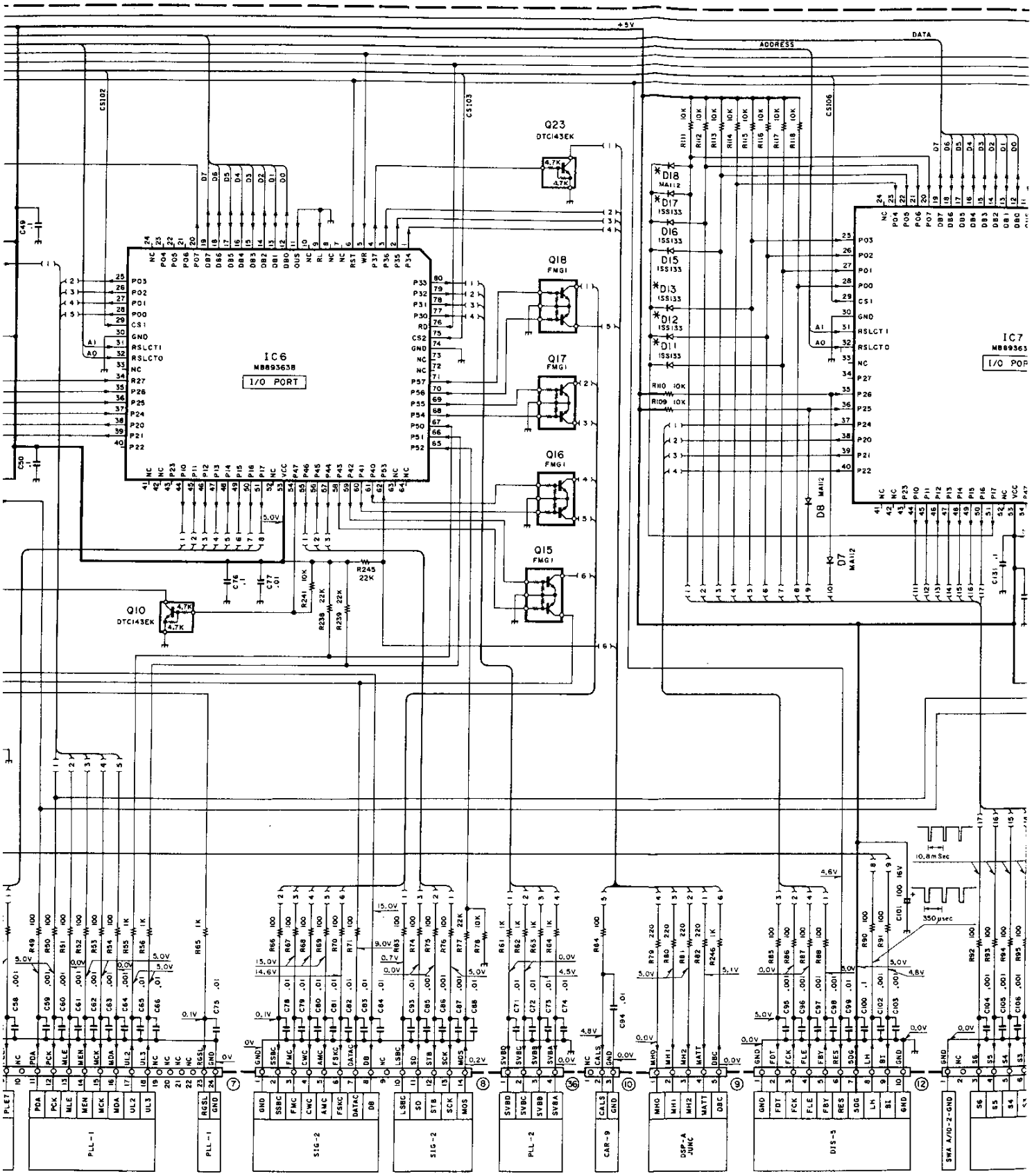
+5V
ADDRESS
DATA
CS102
CS103
CS106
IC6
MB89363B
I/O PORT
IC7
MB89363
I/O PORT
Q23
DTC143EK
Q18
FMG1
Q17
FMG1
Q16
FMG1
Q15
FMG1
Q10
DTC143EK
D18
MA112
D17
1SS133
D16
1SS133
D15
1SS133
D13
1SS133
D12
1SS133
D11
1SS133
D8
MA112
D7
MA112
R245
22K
10.8m Sec
350μsec
PLL-1
SIG-2
PLL-2
CAR-9
DSP-A JUNC
DIS-5
SWA A/D-2-GND

CIRCUIT DIAGRAM TS-950SDX

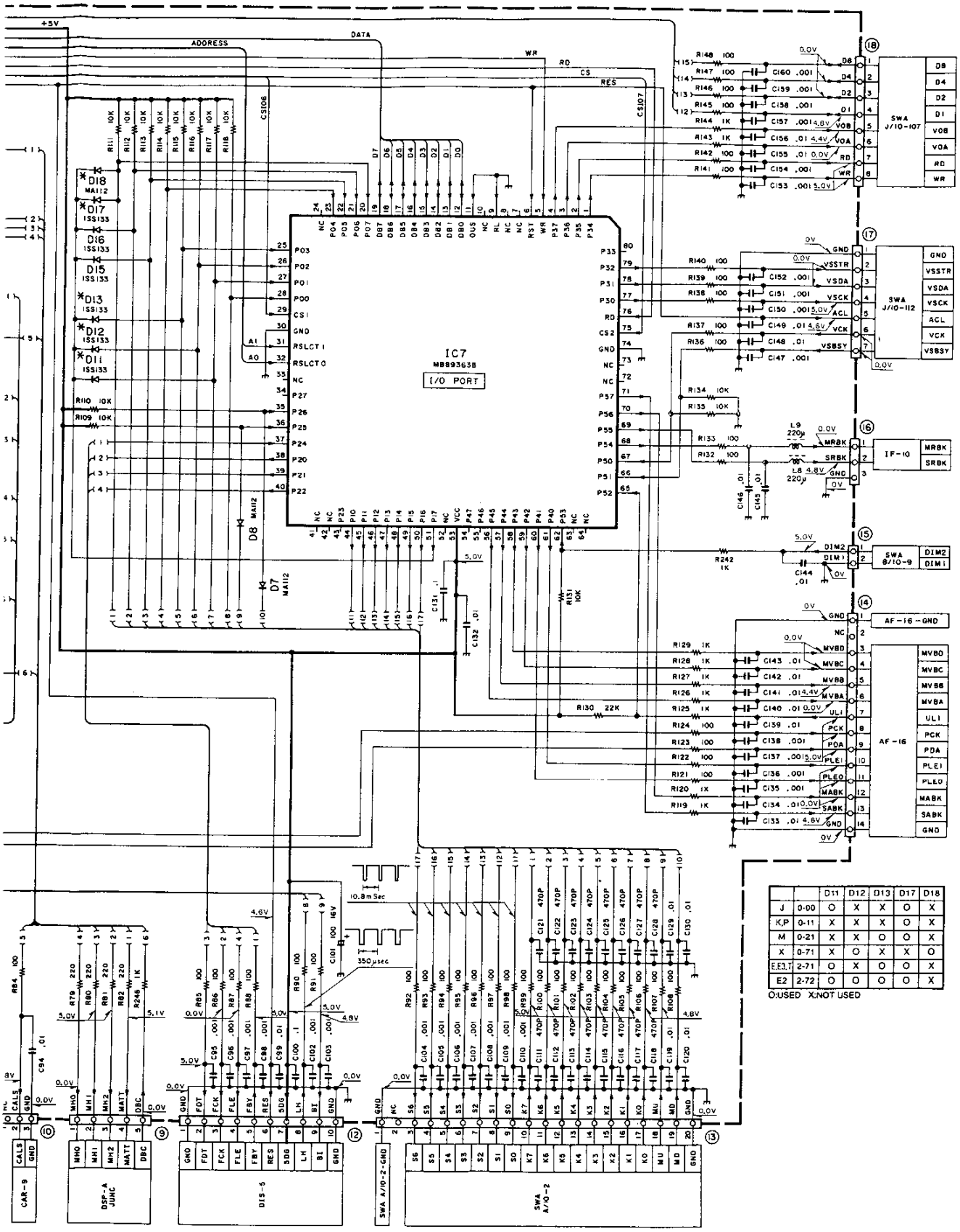

		D11	D12	D13	D17	D18
J	0-00	O	X	X	O	X
K,P	0-11	X	X	X	O	X
M	0-21	X	X	O	O	X
X	0-71	X	O	X	X	O
E,E3,T	2-71	O	X	O	O	X
E2	2-72	O	O	O	O	X

O:USED X:NOT USED

TS-950SDX CIRCUIT DIAGRAM

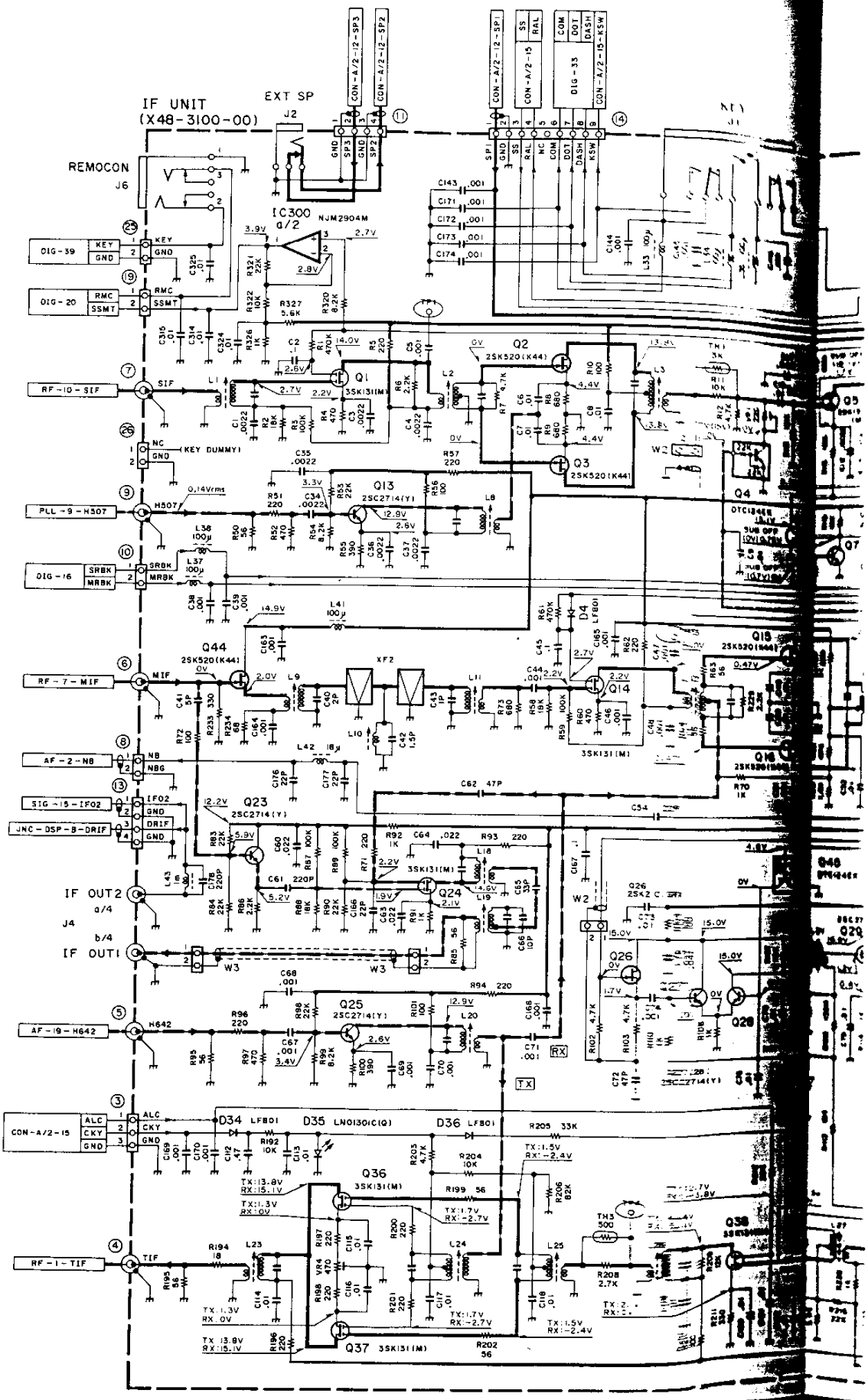

CUIT DIAGRAM

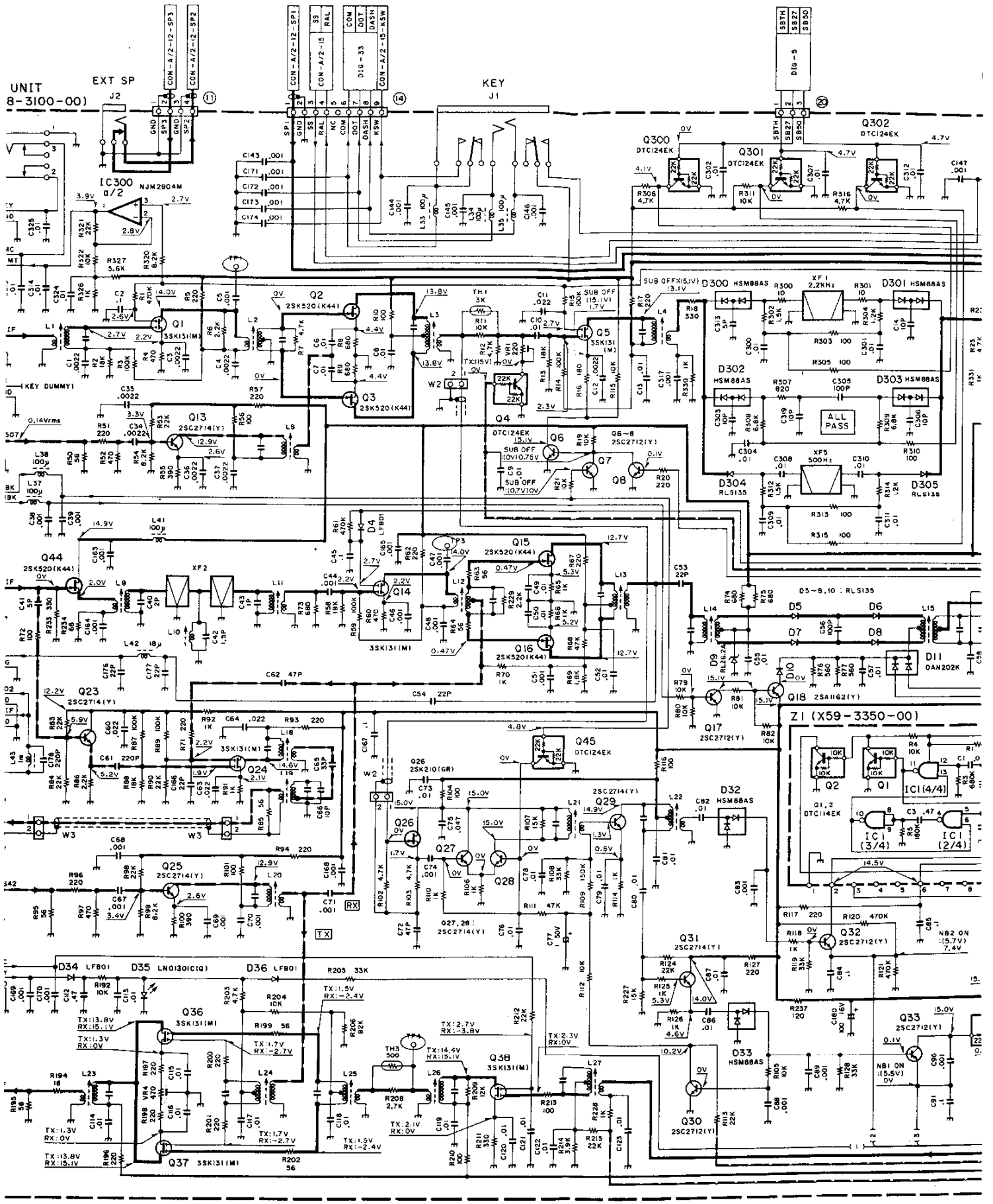

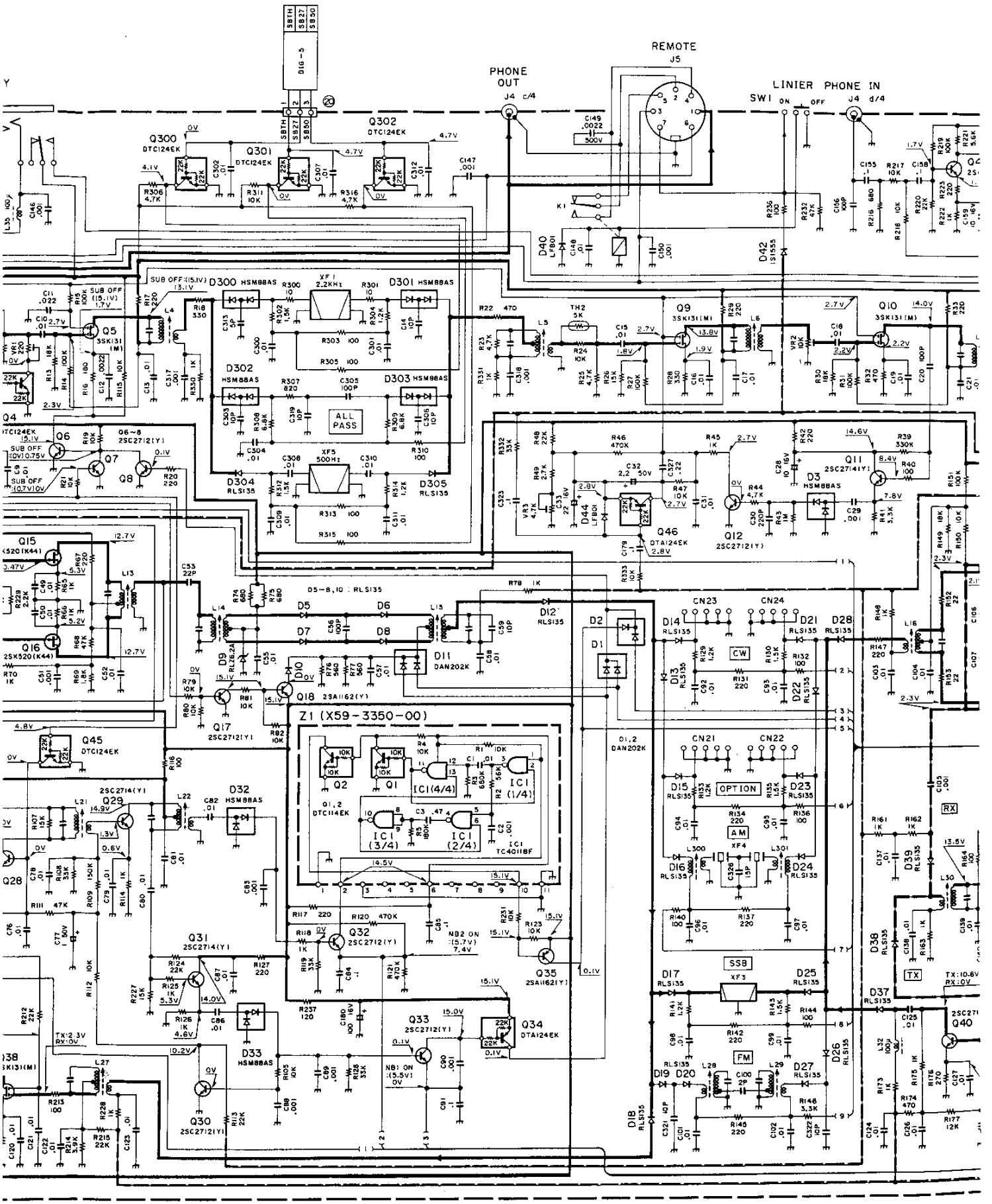
REMOTE
J5
PHONE OUT
J4 c/4
LINIER PHONE IN
J4 d/4
SW1 ON OFF
Q300 DTC124EK
Q301 DTC124EK
Q302 DTC124EK
D300 HSM88AS
D301 HSM88AS
D302 HSM88AS
D303 HSM88AS
D304 RLS135
D305 RLS135
XF1 2.2KHz
XF5 500Hz
ALL PASS
Q5 3SK131(M)
Q6 2SC2712(Y)
Q7
Q8
Q9 3SK131(M)
Q10 3SK131(M)
Q11 2SC2714(Y)
Q12 2SC2712(Y)
Q46 DTA124EK
D3 HSM88AS
D44 LFB01
D40 LFB01
D42 1S1555
K1
TH2 5K
Q15 2SK520(K44)
Q16 2SK520(K44)
D5-8,10 : RLS135
D9 RLZ8.2A
D11 DAN202K
Q18 2SA1162(Y)
Q17 2SC2712(Y)
Q45 DTC124EK
Z1 (X59-3350-00)
Q2
Q1
IC1(4/4)
IC1 (1/4)
IC1 (3/4)
IC1 (2/4)
IC1 TC4011BF
Q1,2 DTC114EK
Q1,2 DAN202K
Q29 2SC2714(Y)
D32 HSM88AS
Q31 2SC2714(Y)
Q32 2SC2712(Y)
Q35 2SA1162(Y)
Q33 2SC2712(Y)
Q34 DTA124EK
D33 HSM88AS
Q30 2SC2712(Y)
Q28
Q38 3SK131(M)
CN23
CN24
CN21
CN22
CW
OPTION
AM
SSB
FM
XF3
XF4
RX
TX
TX:10.6V
RX:0V
NB2 ON :(5.7V) 7.4V
NB1 ON :(5.5V) 0V
SUB OFF :(15.1V) 13.1V
SUB OFF (15.1V) 1.7V
SUB OFF (0V) 0.75V
SUB OFF (0.7V) 0V
Q6~8 2SC2712(Y)
D12 RLS135
D2
D1
D14 RLS135
D21 RLS135
D28 RLS135
D13 RLS135
D22 RLS135
D15 RLS135
D23 RLS135
D16 RLS135
D24 RLS135
D17 RLS135
D25 RLS135
D19 RLS135
D20
D27 RLS135
D26 RLS135
D18 RLS135
D38 RLS135
D39 RLS135
D37 RLS135
Q40 2SC2714(Y)

IF UNIT (X48-3

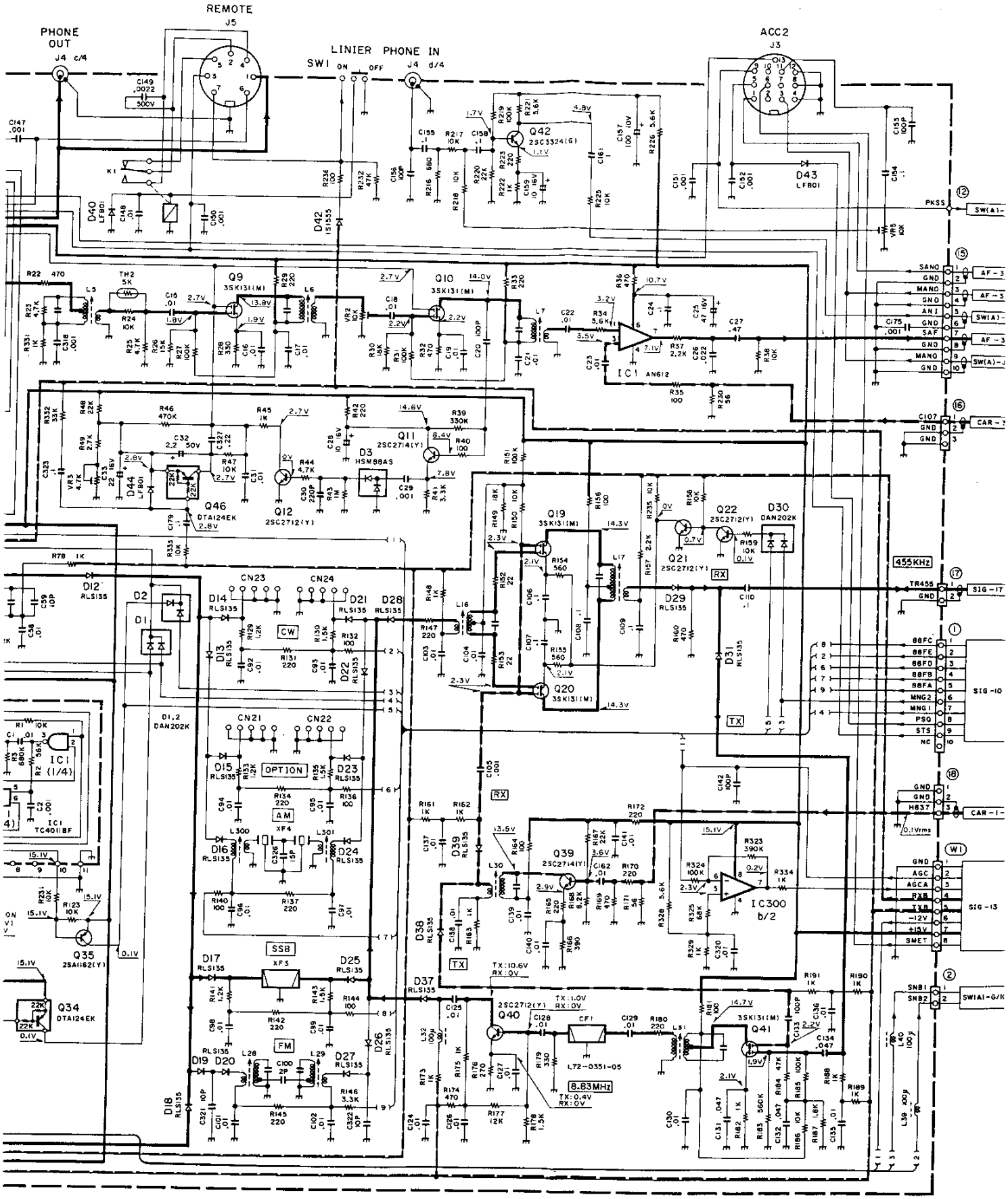
REMOTE
J5
PHONE OUT
J4 c/4
LINIER PHONE IN
SW1 ON OFF
J4 d/4
ACC2
J3
Q9 3SK131(M)
Q10 3SK131(M)
IC1 AN612
Q11 2SC2714(Y)
Q12 2SC2712(Y)
Q46 DTA124EK
Q19 3SK131(M)
Q20 3SK131(M)
Q21 2SC2712(Y)
Q22 2SC2712(Y)
Q42 2SC3324(G)
Q39 2SC2714(Y)
Q40 2SC2712(Y)
Q41 3SK131(M)
IC300 b/2
IC1 (1/4)
IC1 TC4011BF
Q35 2SA1162(Y)
Q34 DTA124EK
455KHz
CW
OPTION
AM
SSB
FM
RX
TX
8.83MHz
CF1 L72-0351-05
XF3
XF4
PKSS
SW(A)-
SANO
GND
MANO
ANI
SAF
AF-3
SW(A)-
C107
CAR-
TR455
SIG-17
88FC
88FE
88FD
88FB
88FA
MNG2
MNG1
PSQ
STS
NC
SIG-10
H837
CAR-1-
AGC
AGCA
RXB
TXB
-12V
+15V
SMET
SIG-13
SNB1
SNB2
SW1A1-G/K

IF UNIT (X48-3100-00)

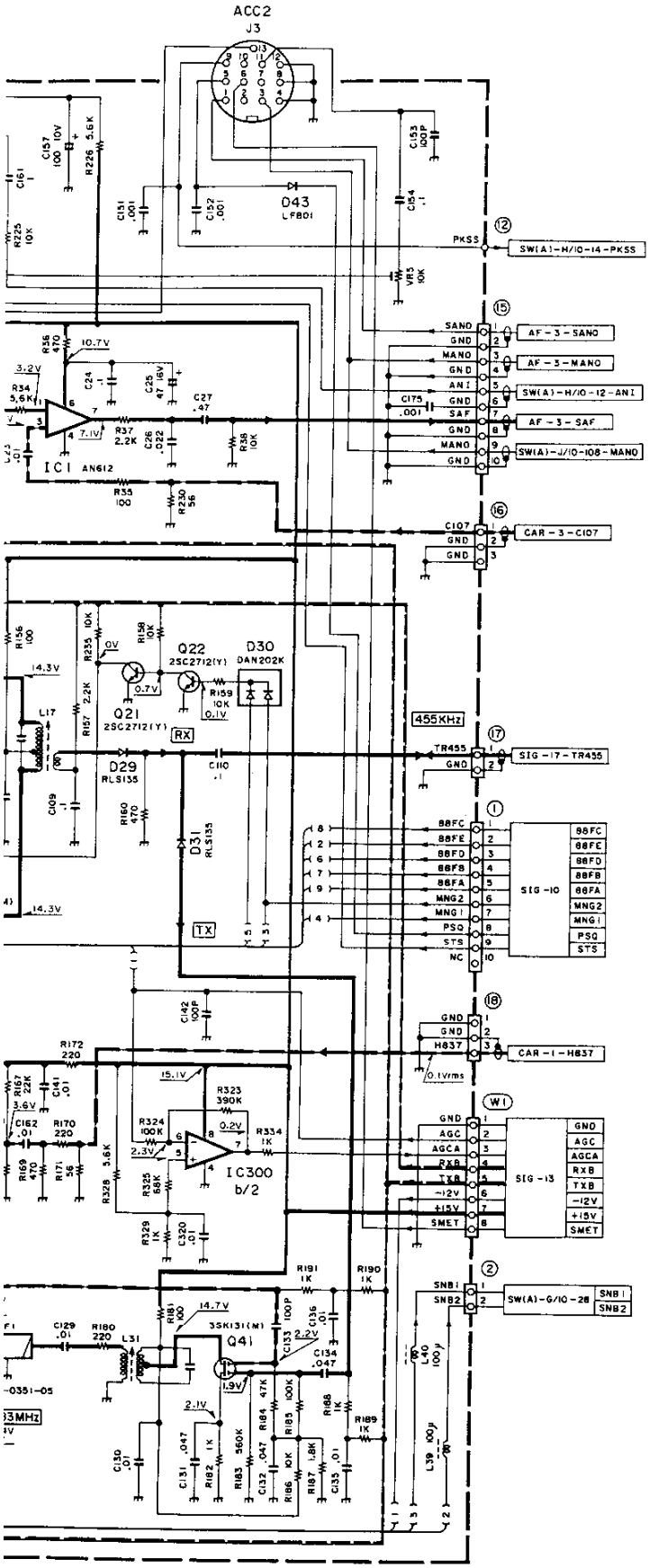

2SA1162
2SC2712
2SC2714
2SC3324
DTA124EK
DTC124EK

2SK210

3SK131

2SK520

AN612

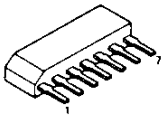

NJM2904M

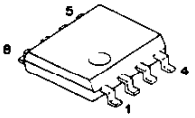

IF UNIT (X48-3100-00) Component side view

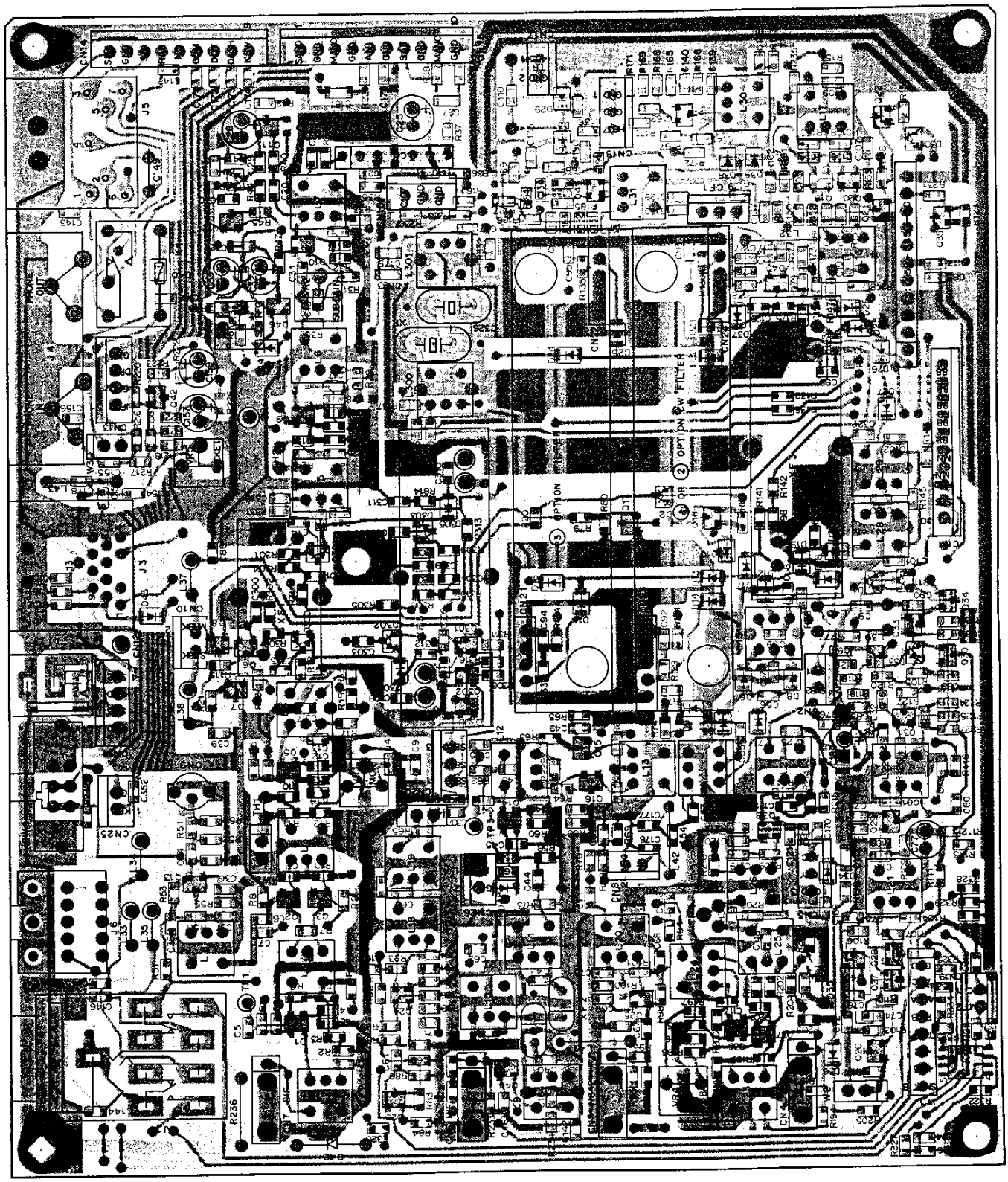

IF UNIT (X48-3100-00) Foil side view

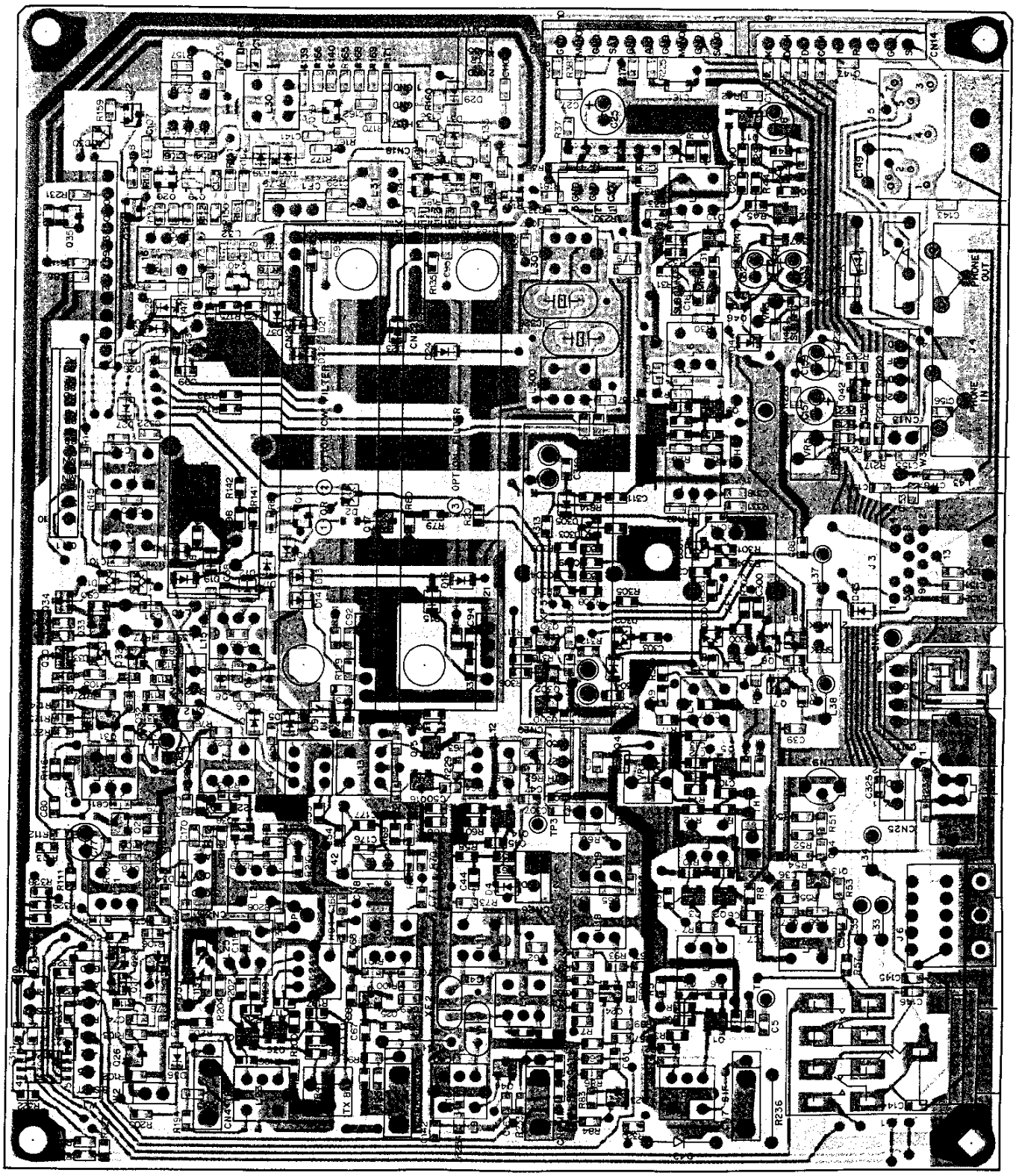

TS-950SDX PC BOARD VIEWS

AF UNIT (X49-3050-00) Component side view

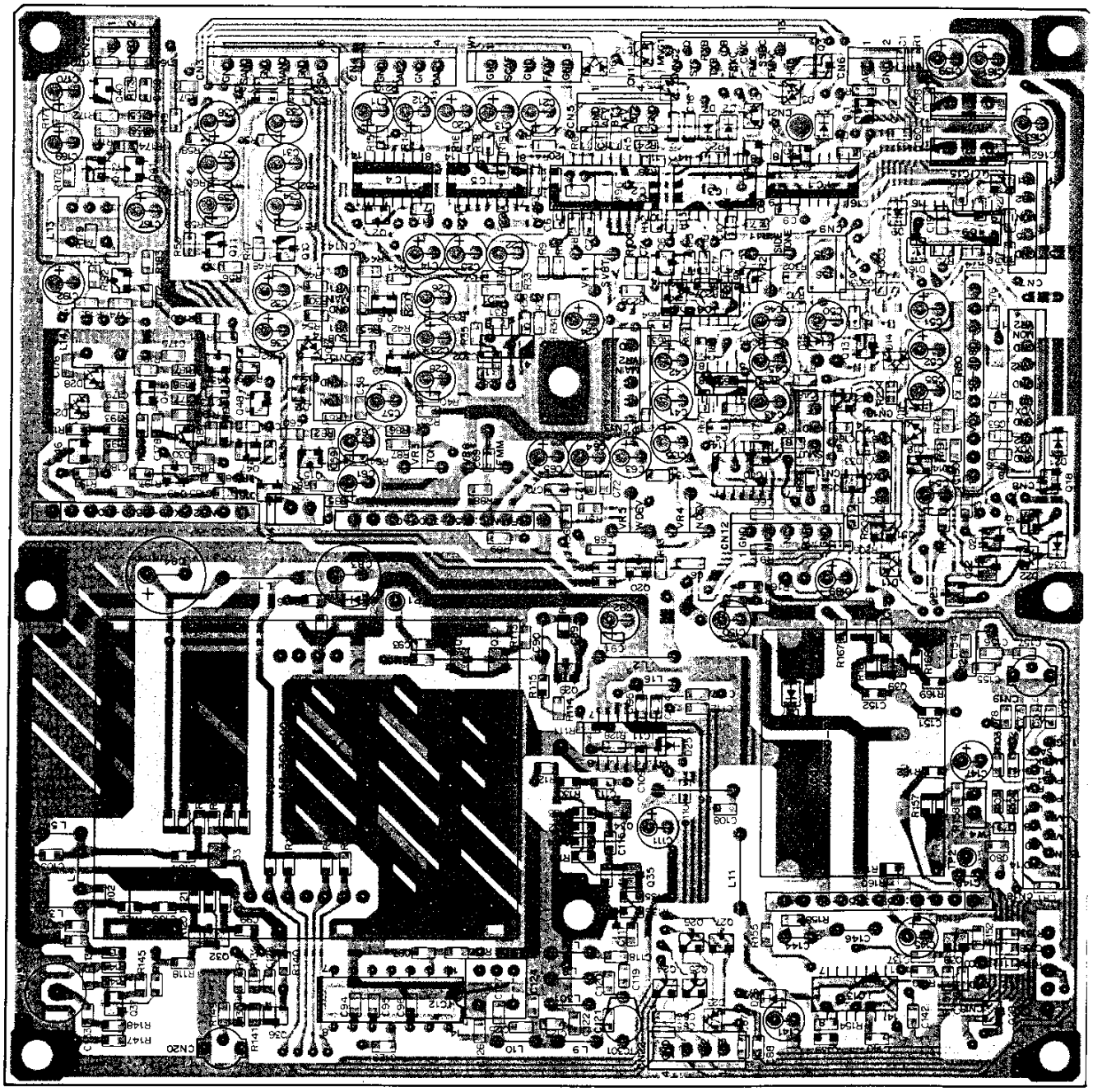

2SA1162
2SC2712
2SC2714
2SC3324
2SD1757K
DTA124EK
DTC114EK
DTC114TK
DTC114WK
DTC124EK

2SK210

2SC2996

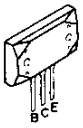

AN78N10

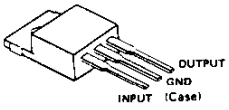

AN78N05

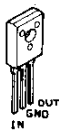

NJM4558M

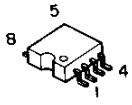

AF UNIT (X49-3050-00) Foil side view

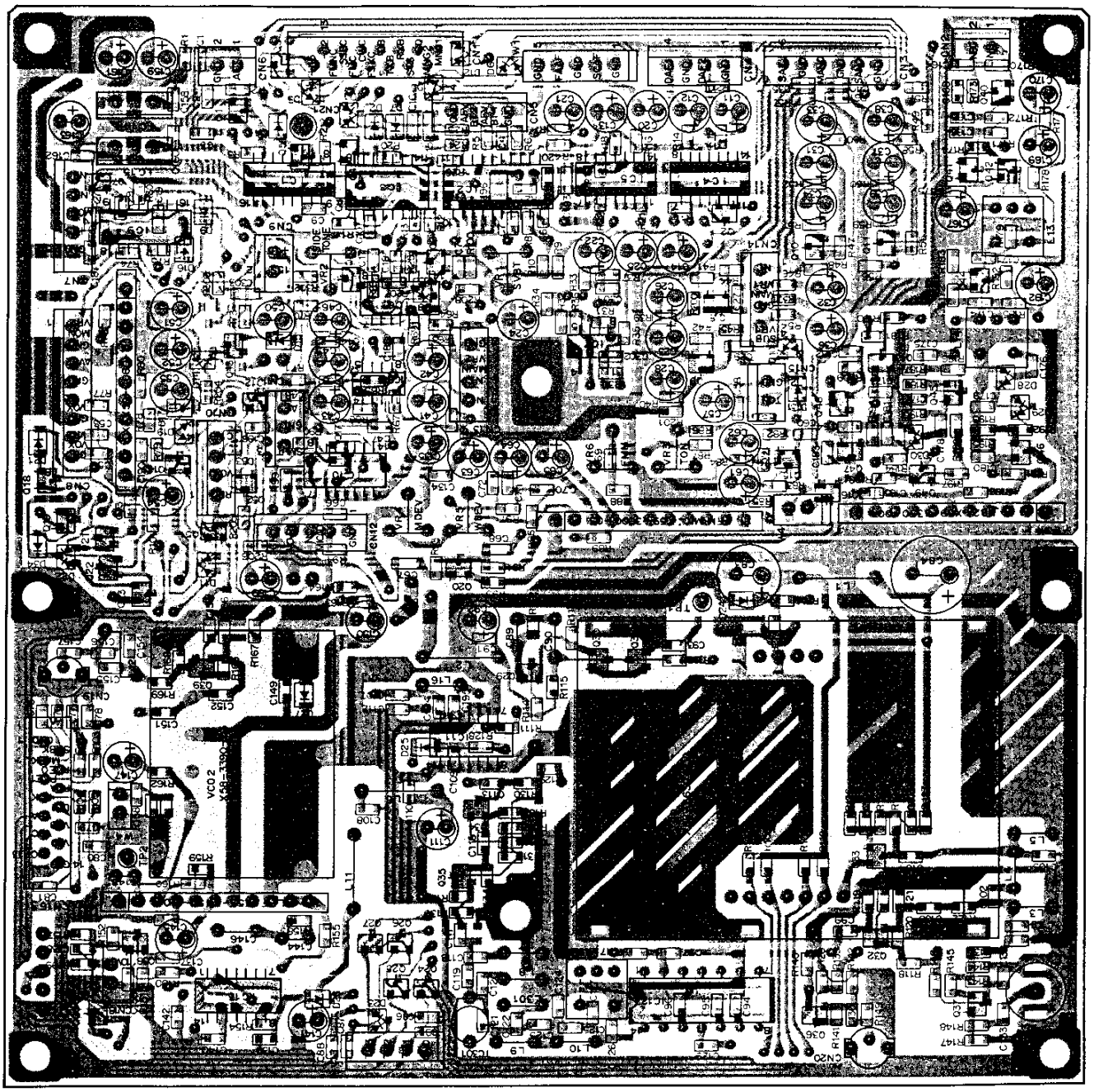

SN76514N

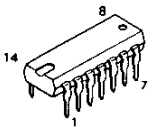

CXD1225M

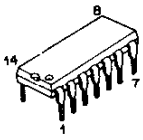

MF5CWM
TC4066BF

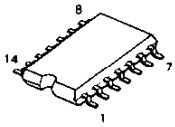

SN74LS390NS
TC4538BF

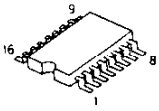

MF10CCWM

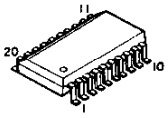

AF UNIT (X49-3050-00)

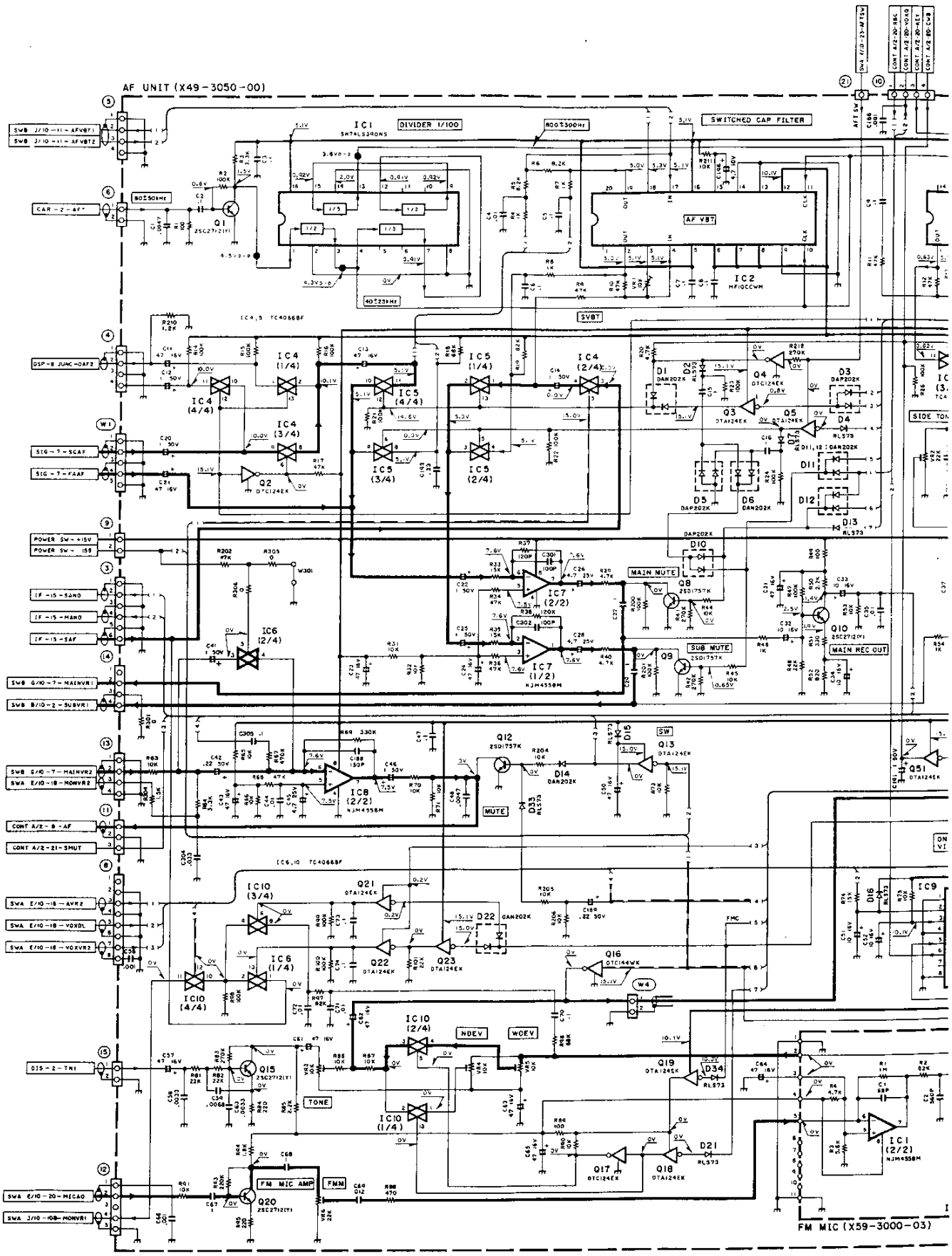

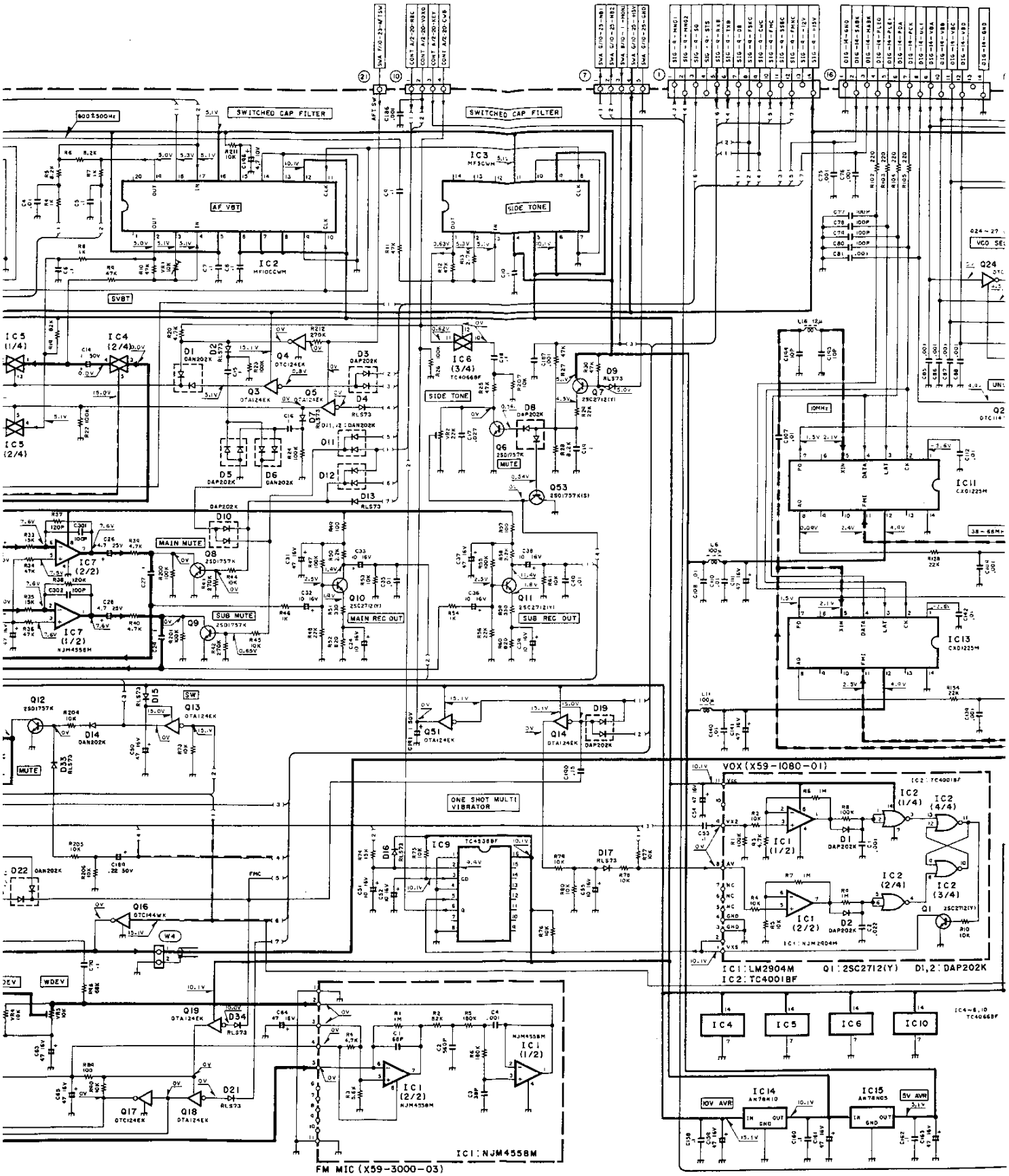
SWITCHED CAP FILTER
AF VBT
SIDE TONE
MAIN MUTE
SUB MUTE
MAIN REC OUT
SUB REC OUT
MUTE
ONE SHOT MULTI VIBRATOR
VOX (X59-1080-01)
IC1 : LM2904M
IC2 : TC4001BF
Q1 : 2SC2712(Y)
D1,2 : DAP202K
FM MIC (X59-3000-03)
IC1 : NJM4558M

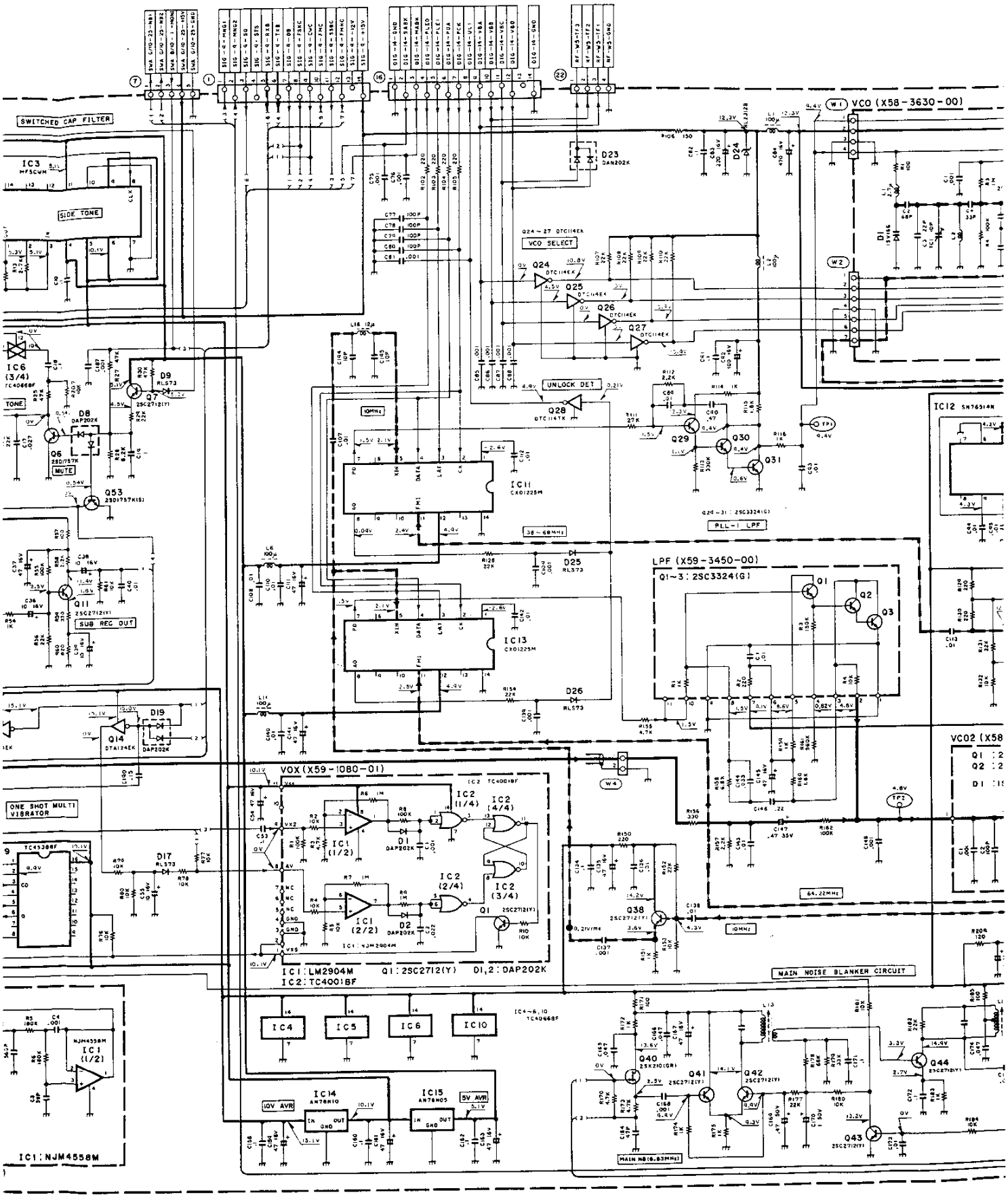
SWITCHED CAP FILTER
SIDE TONE
VCO SELECT
UNLOCK DET
VCO (X58-3630-00)
PLL-I LPF
LPF (X59-3450-00)
Q1~3 : 2SC3324(G)
SUB REC OUT
MUTE
ONE SHOT MULTI VIBRATOR
VOX (X59-1080-01)
IC1 : LM2904M
IC2 : TC4001BF
Q1 : 2SC2712(Y)
D1,2 : DAP202K
MAIN NOISE BLANKER CIRCUIT
10V AVR
5V AVR
IC1 : NJM4558M

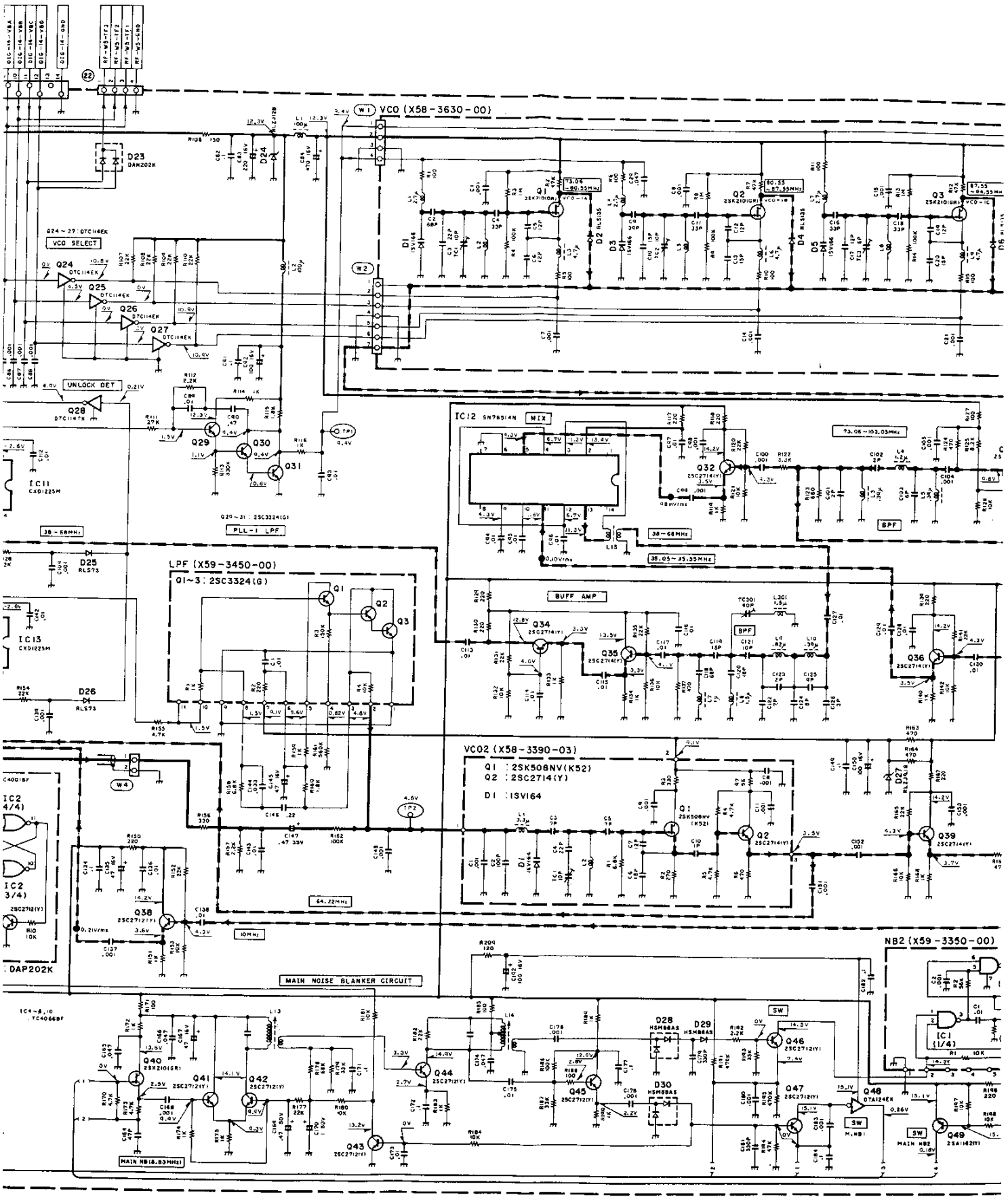
VCO (X58-3630-00)
VCO SELECT
UNLOCK DET
PLL-1 LPF
IC12 SN76514N MIX
BPF
LPF (X59-3450-00)
Q1~3 : 2SC3324(G)
BUFF AMP
VCO2 (X58-3390-03)
Q1 : 2SK508NV(K52)
Q2 : 2SC2714(Y)
D1 : 1SV164
64.22MHz
10MHz
MAIN NOISE BLANKER CIRCUIT
MAIN NB(8.83MHz)
NB2 (X59-3350-00)
IC1 (1/4)
SW
MAIN NB2

CIRCUIT DIAGRAM TS-950SDX

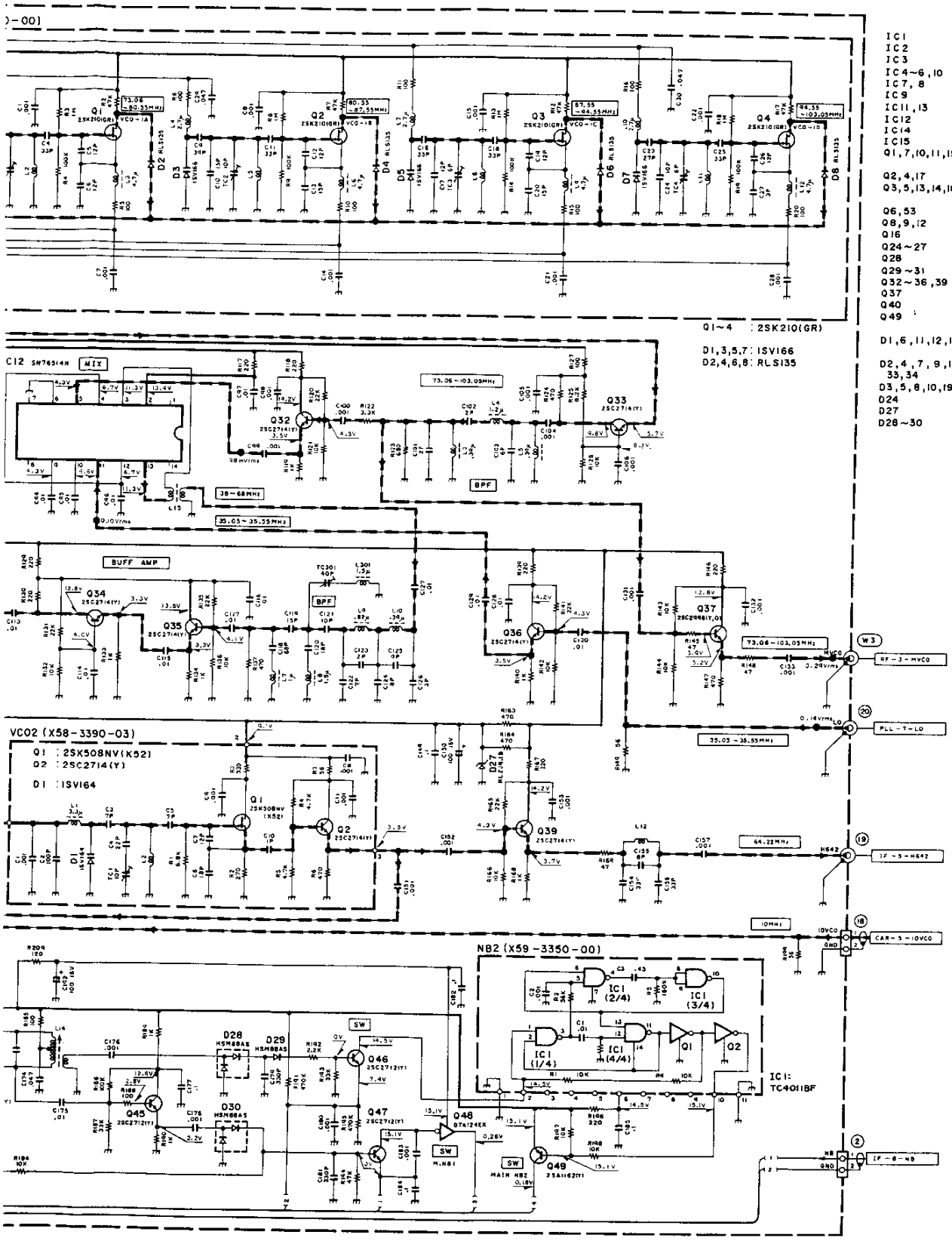

TS-950SDX CIRCUIT DIAGRAM

PLL UNIT (X50-3170-00)

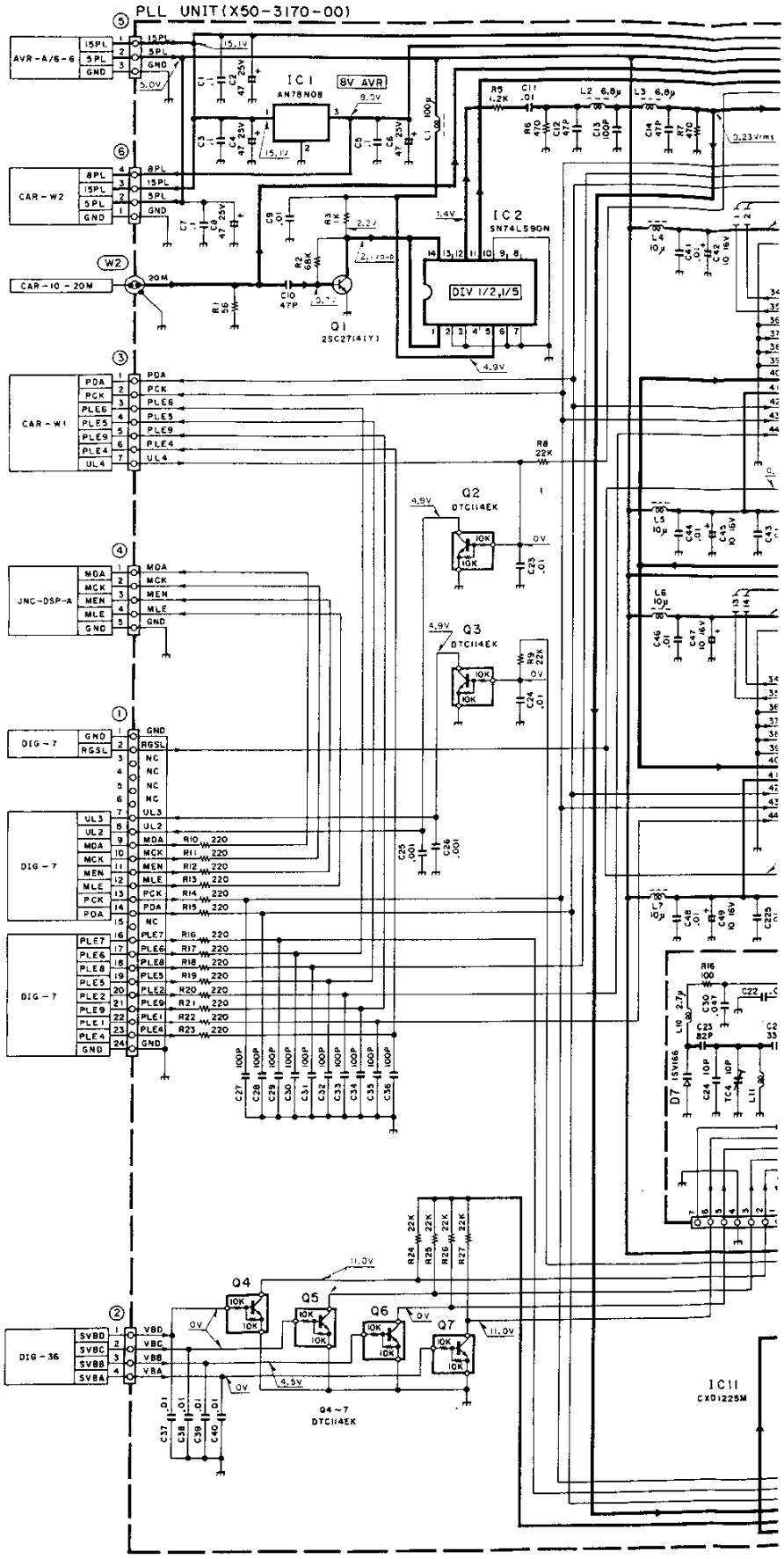

DIAGRAM

. UNIT (X50-3170-00)

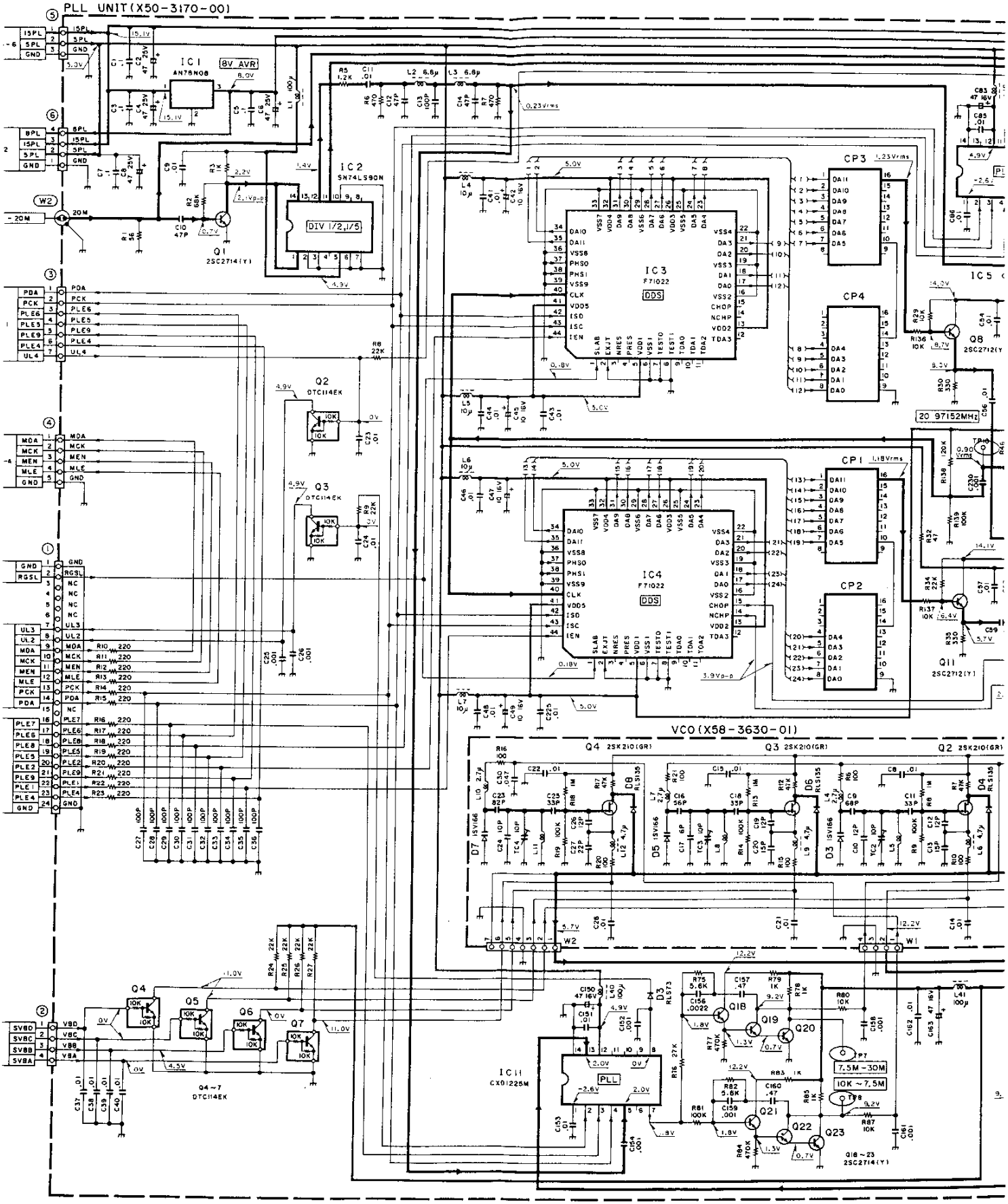

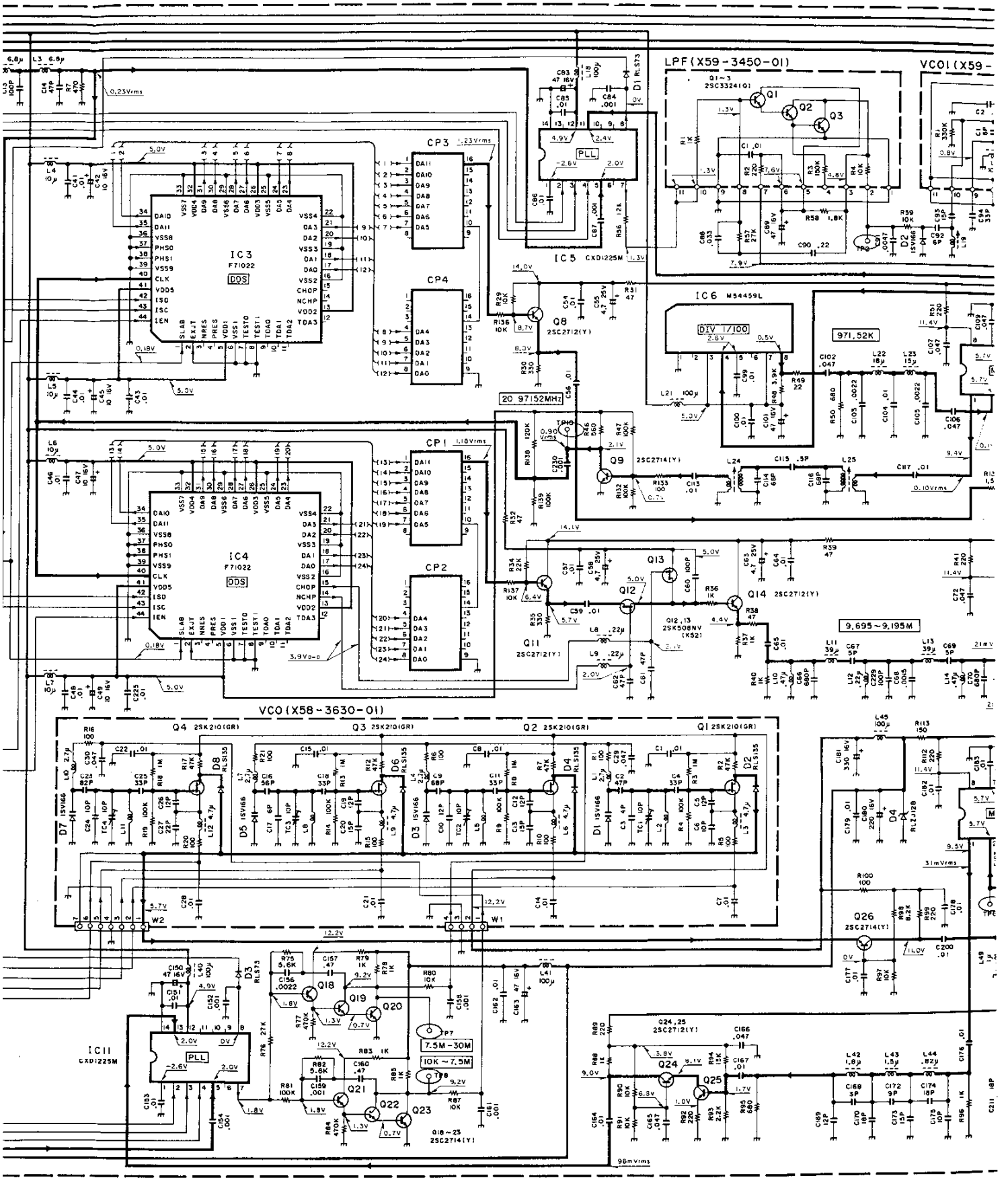
LPF(X59-3450-01)
VCO1(X59-
IC3
F71022
DDS
IC4
F71022
DDS
IC5
CXD1225M
PLL
IC6
M54459L
DIV 1/100
IC11
CXD1225M
PLL
CP1
CP2
CP3
CP4
20.97152MHz
971.52K
9.695~9.195M
VCO(X58-3630-01)
Q1~3
2SC3324(Q)
Q8
2SC2712(Y)
Q9
2SC2714(Y)
Q11
2SC2712(Y)
Q12,13
2SK508NV
(K52)
Q14
2SC2712(Y)
Q4
2SK210(GR)
Q3
2SK210(GR)
Q2
2SK210(GR)
Q1
2SK210(GR)
Q18~23
2SC2714(Y)
Q24,25
2SC2712(Y)
Q26
2SC2714(Y)
7.5M~30M
10K~7.5M
0.23Vrms
1.23Vrms
1.18Vrms
0.10Vrms
31mVrms
96mVrms

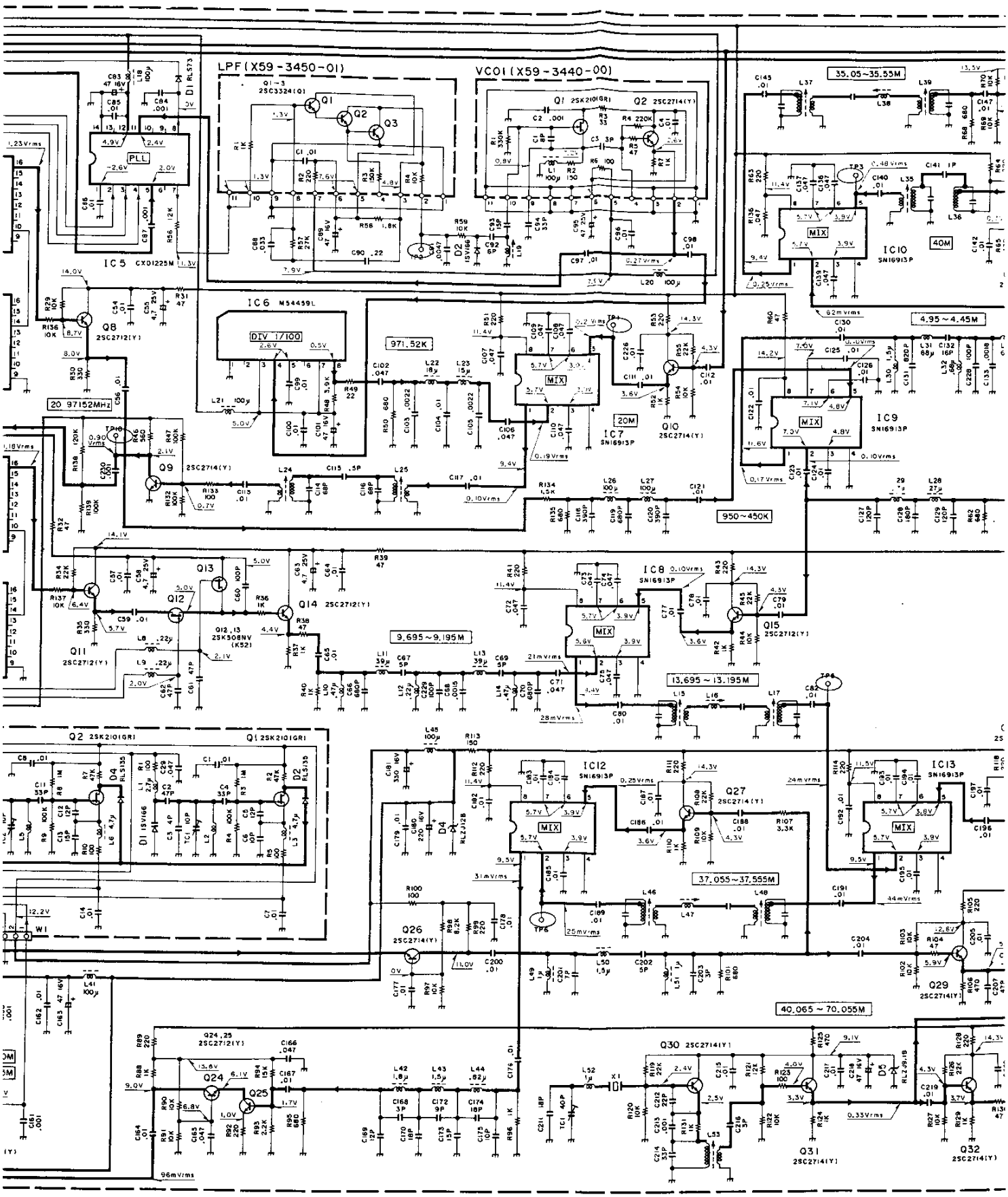
LPF (X59-3450-01)
VCO1 (X59-3440-00)
PLL
IC5 CXD1225M
IC6 M54459L
DIV 1/100
20 97152MHz
971.52K
35.05~35.55M
40M
4.95~4.45M
20M
950~450K
9.695~9.195M
13.695~13.195M
37.055~37.555M
40.065~70.055M
IC10 SN16913P
IC9 SN16913P
IC7 SN16913P
IC8 SN16913P
IC12 SN16913P
IC13 SN16913P
MIX

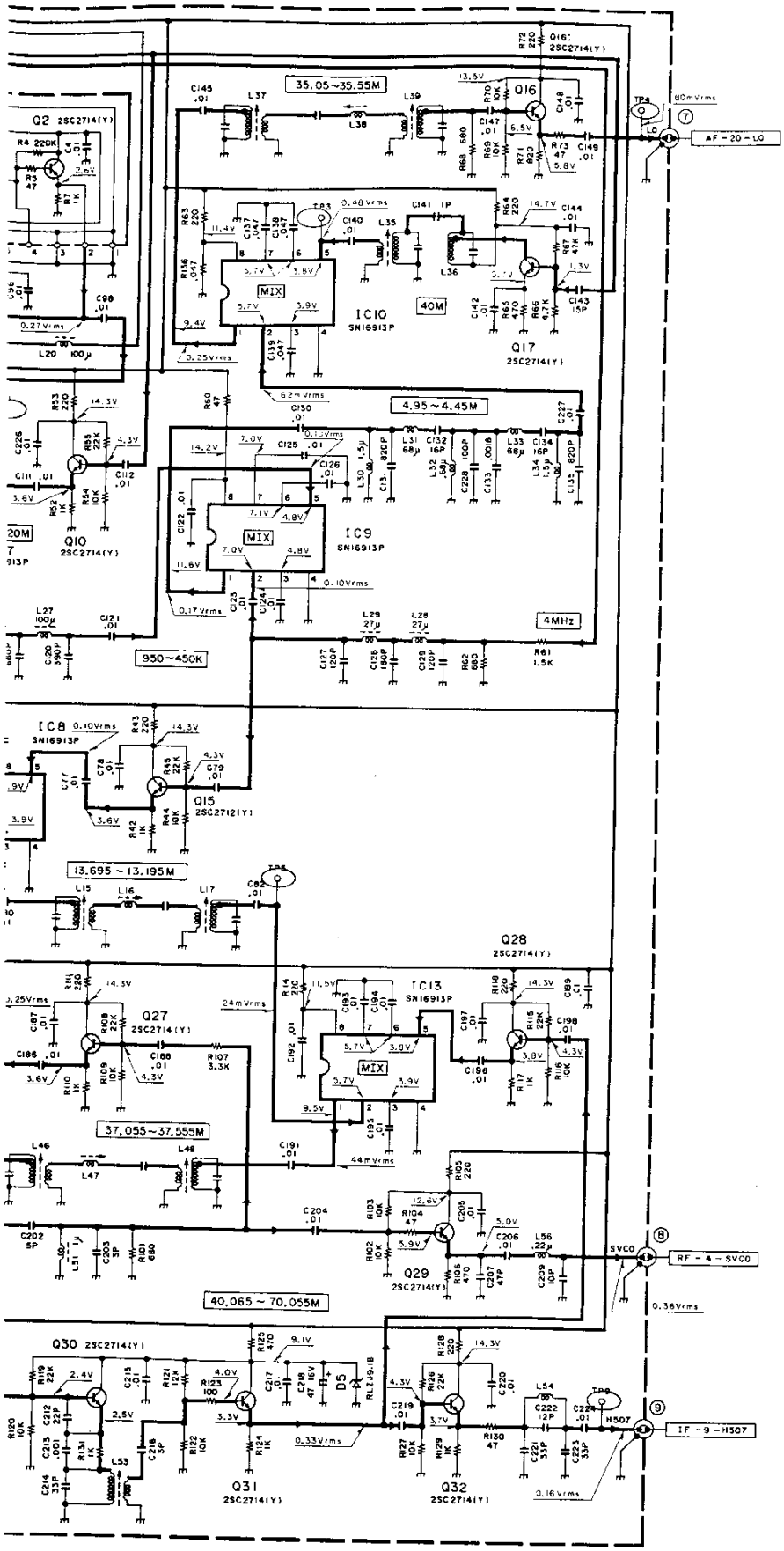

2SC2712
2SC2714
DTC114EK

2SK508NV

AN78N08

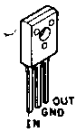

SN16913P

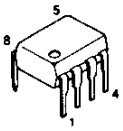

M54459L

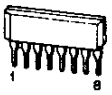

SN74LS90N

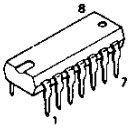

CXD1225M

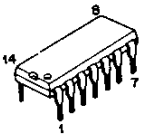

F71022

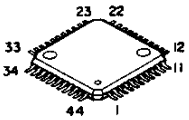

PLL UNIT (X50-3170-00) Component side view

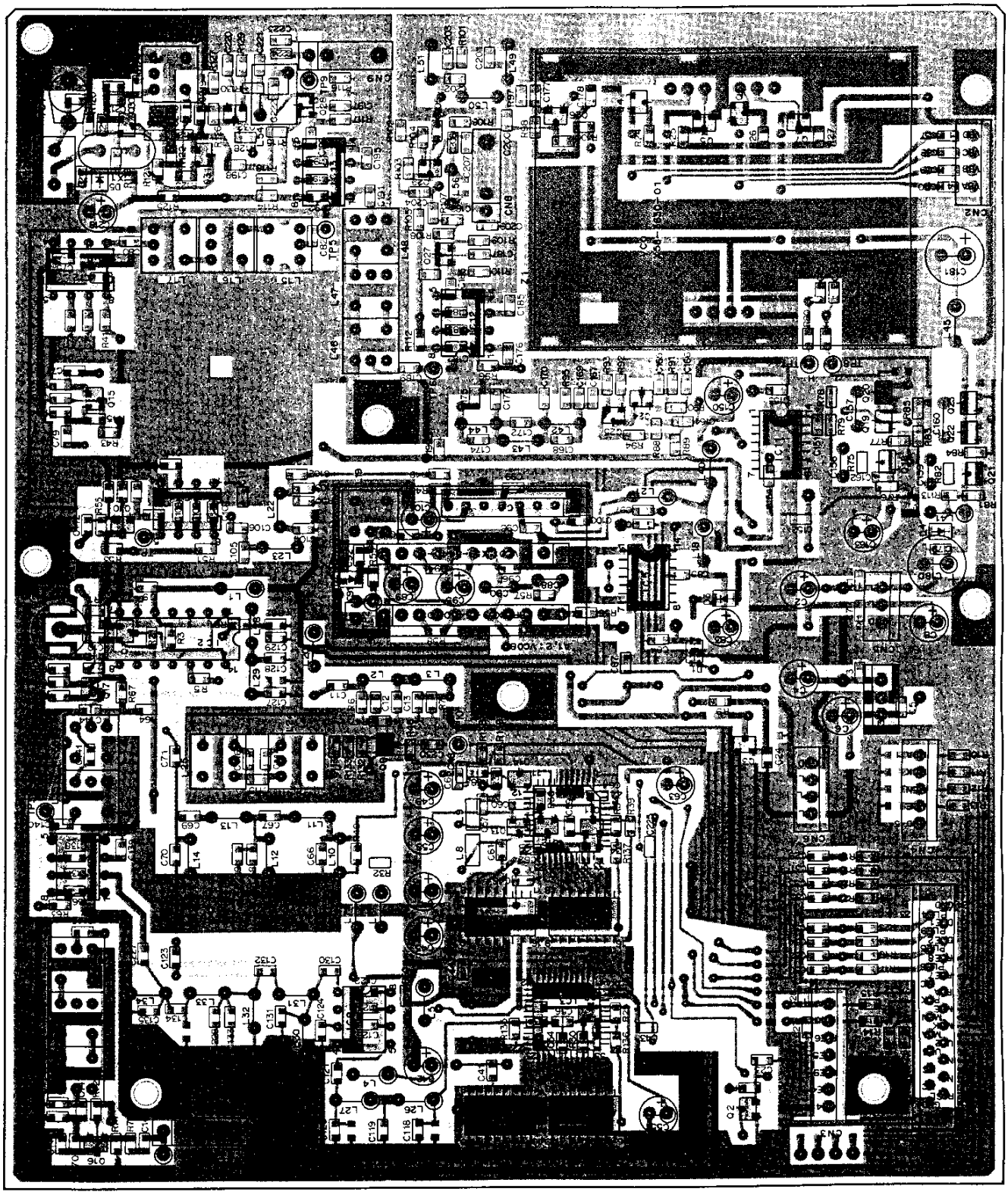

PC BOARD VIEWS TS-950SDX

PLL UNIT (X50-3170-00) Foil side view

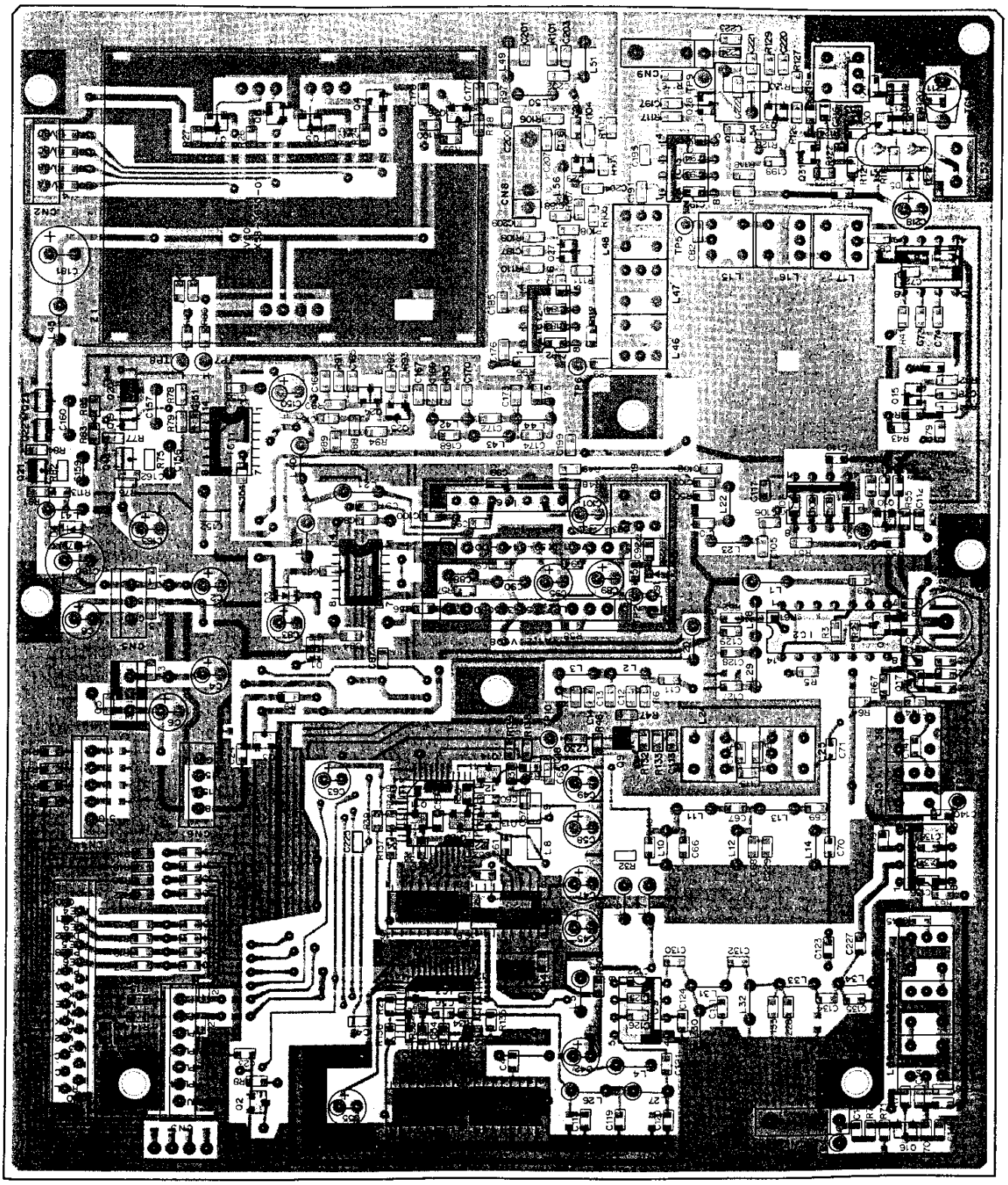

TS-950SDX PC BOARD VIEWS

CAR UNIT (X50-3180-00) Component side view

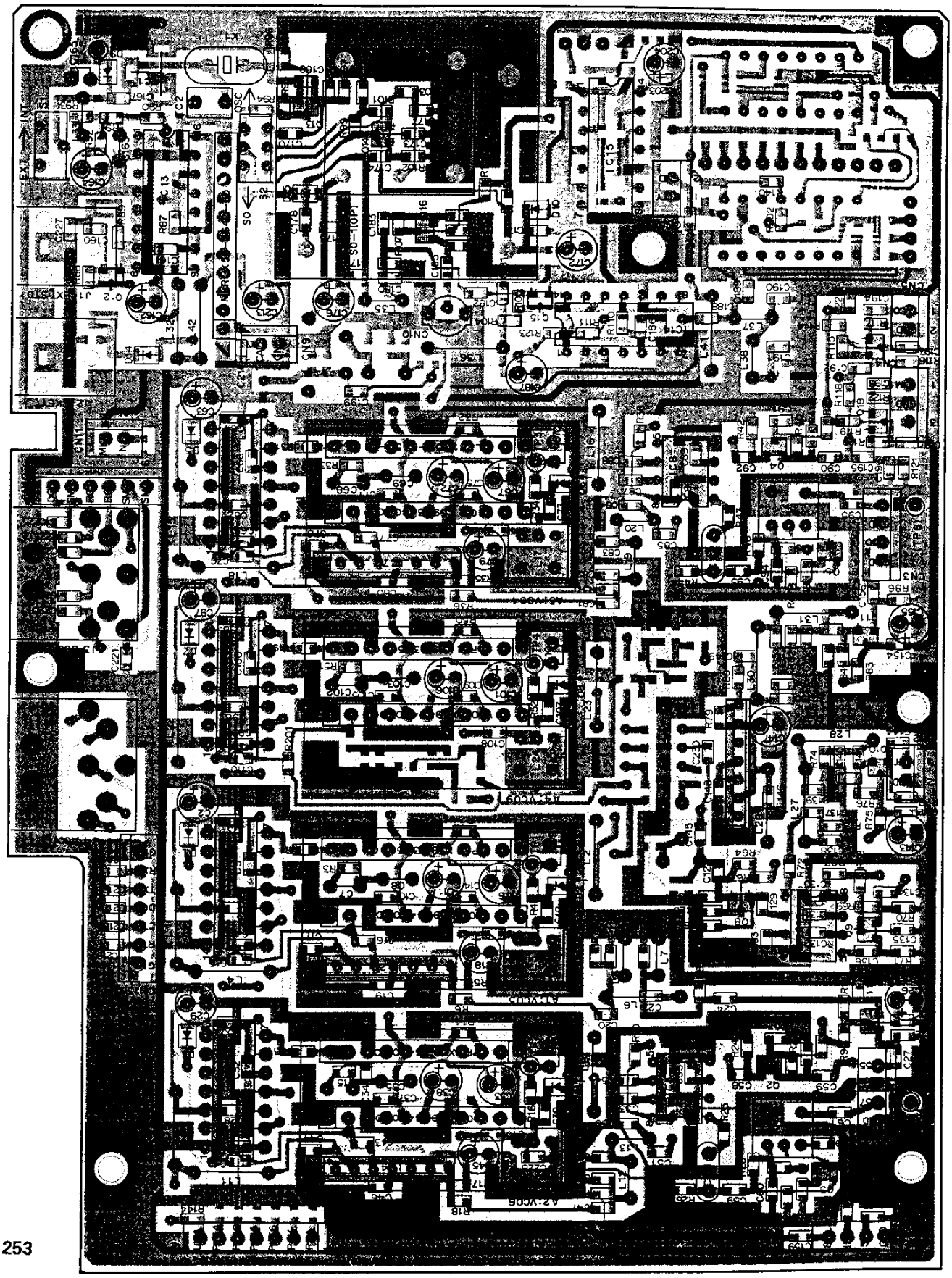

Semiconductor outside views : Refer to page 257.

CAR UNIT (X50-3180-00) Foil side view

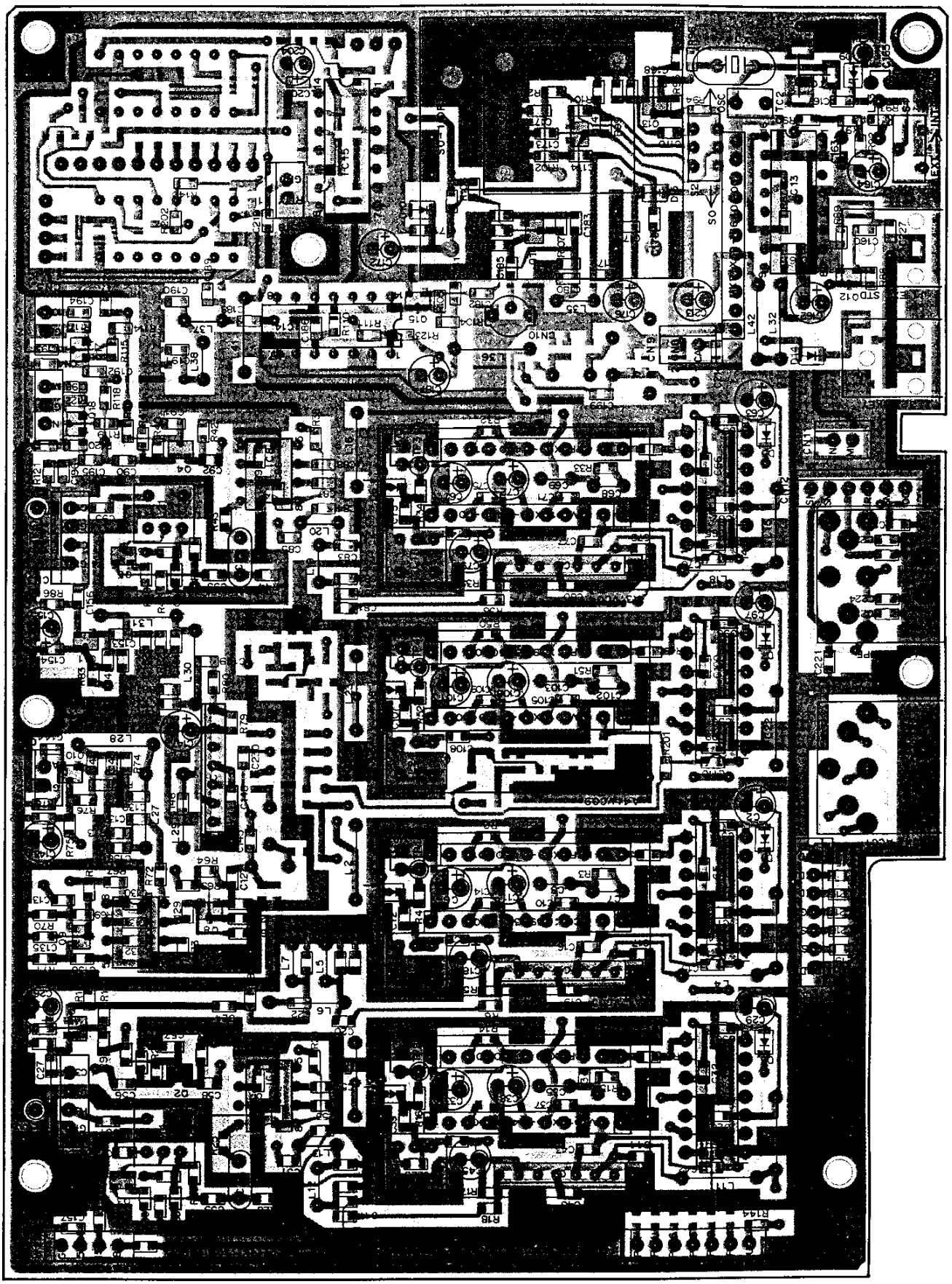

CAR UNIT (X50-3180-00)

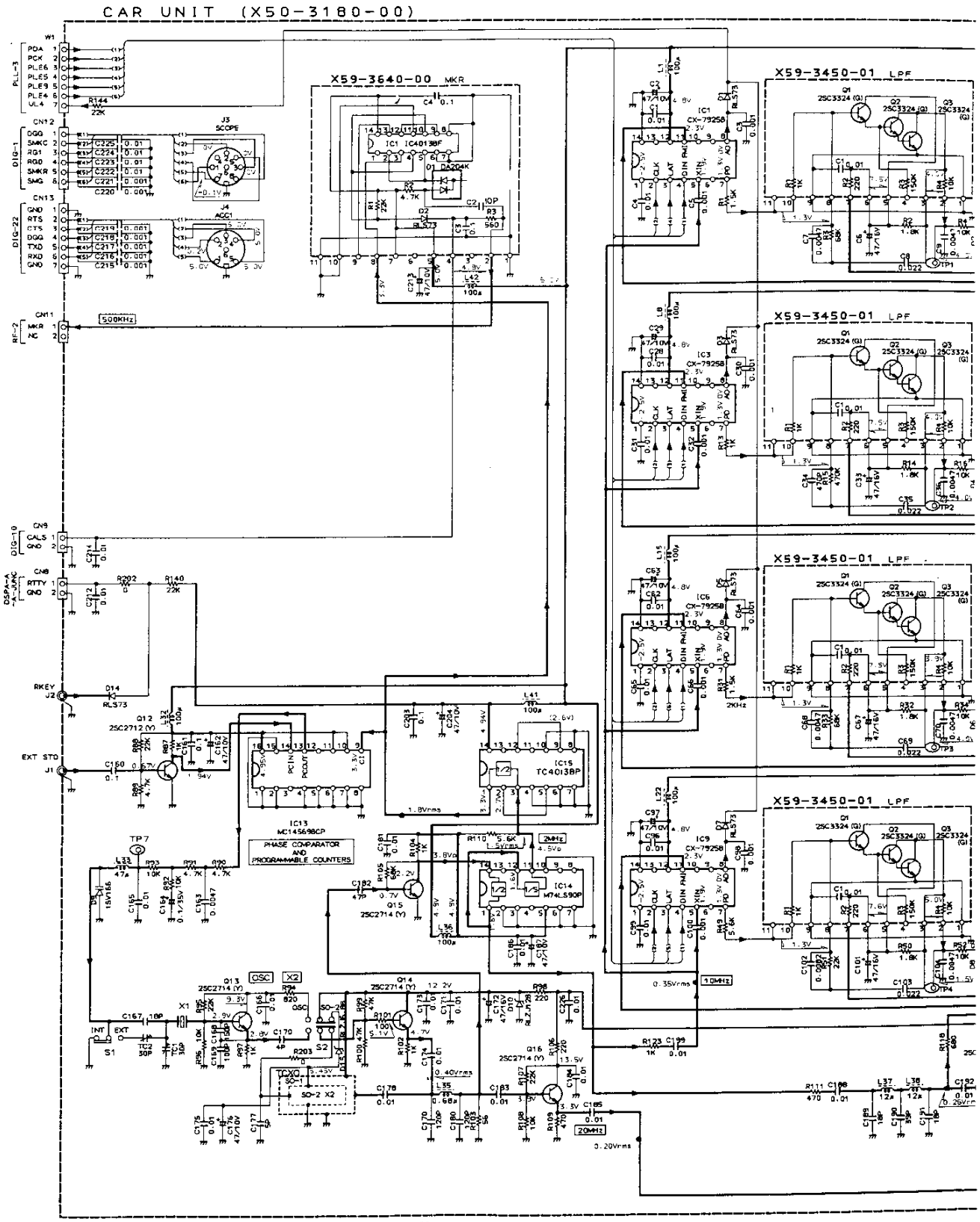

IC1,3,6,9	: CX-7925B	Q1,2,4,8-10,12,16~18	: 2SC2712(Y)
IC2,4,7	: M54459L	Q3,5,13~15	: 2SC2714(Y)
IC5,8,11	: SN16913P		
IC13	: MC14568BCP	D1,3,5,7,14	: RLS73
IC14	: M74LS90P or SN74LS90N	D2,4,6,8,9	: 1SV166
IC15	: TC4013BP	D10	: RLZJ12B
		D15	: RLZJ6.8B

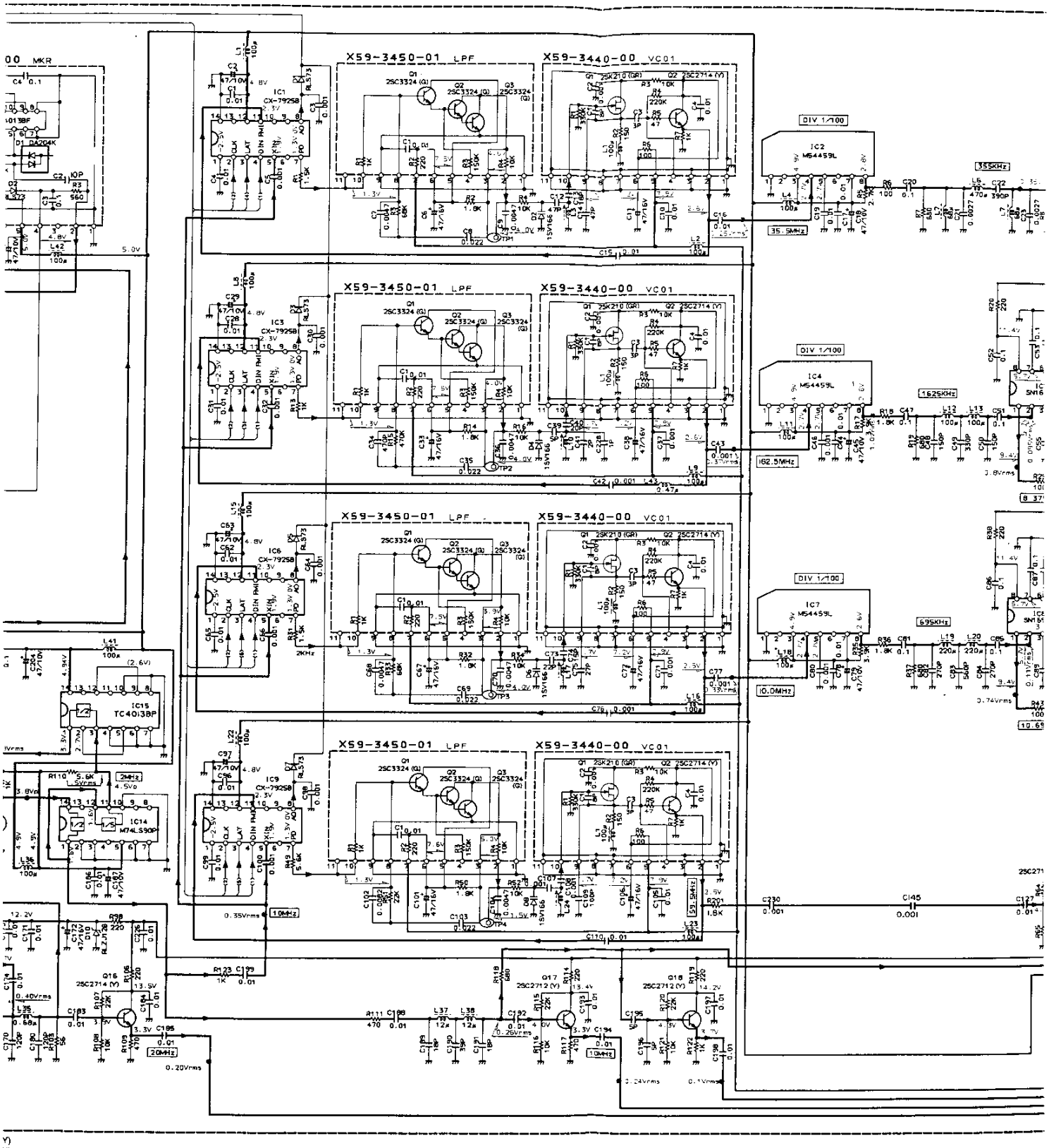
X59-3450-01 LPF
X59-3440-00 VCO1
DIV 1/100
IC2 M54459L
IC4 M54459L
IC7 M54459L
IC1 CX-79258
IC3 CX-79258
IC6 CX-79258
IC9 CX-79258
IC15 TC4013BP
IC14 M74LS90P
355KHz
1625KHz
695KHz
35.9MHz
162.5MHz
10.0MHz
2MHz
10MHz
20MHz
5.0V

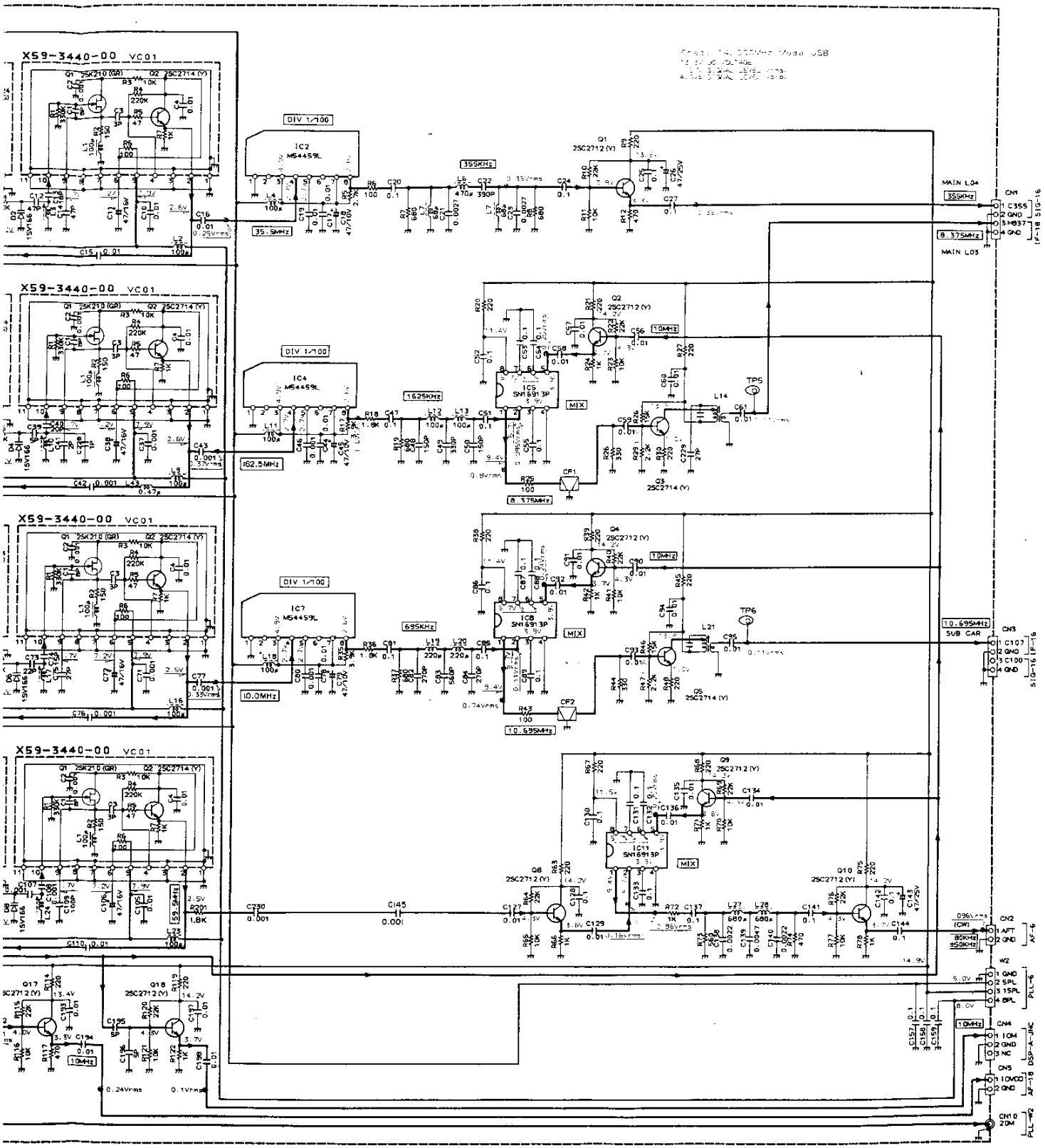
X59-3440-00 VC01
DIV 1/100
IC2 M54459L
IC4 M54459L
IC7 M54459L
IC8 SN16913P
IC11 SN16913P
MIX
355KHz
1625KHz
695KHz
35.5MHz
162.5MHz
10.0MHz
8.375MHz
10.695MHz
10MHz
MAIN L04
MAIN L03
SUB CAR
CN1
CN2
CN3
CN4
CN5
CN10
W2
TP5
TP6
CF1
CF2

TS-950SDX PC BOARD VIEW

2SC2712
2SC2714

TC4013P

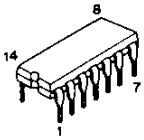

AN78N05

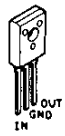

SN16913P

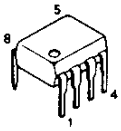

CX-7925B

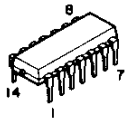

2SA562

M54459L

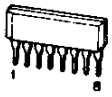

MC14568BCP

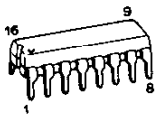

M54581P

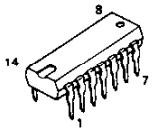

M74LS145N

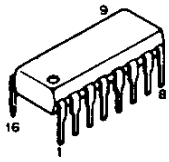

FILTER UNIT (X51-306X-XX) Component side view

0-12 : K,M,E,E3,X,P,T 2-71 : E2

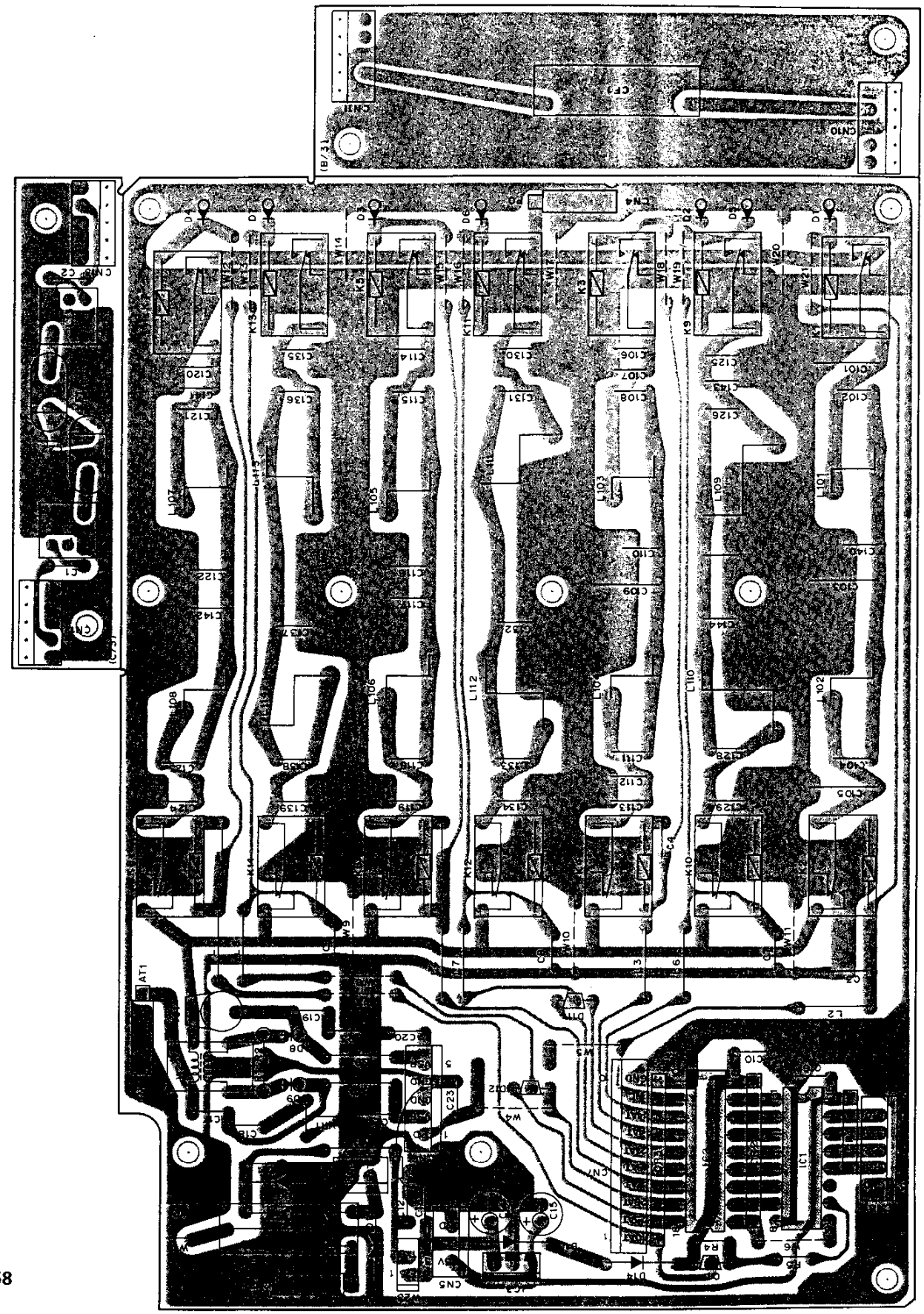

FILTER UNIT (X51-306X-XX) 0-12 : K,M,E,E3,X,P,T 2-71 : E2

FILTER UNIT (X51-306X-XX) A/3

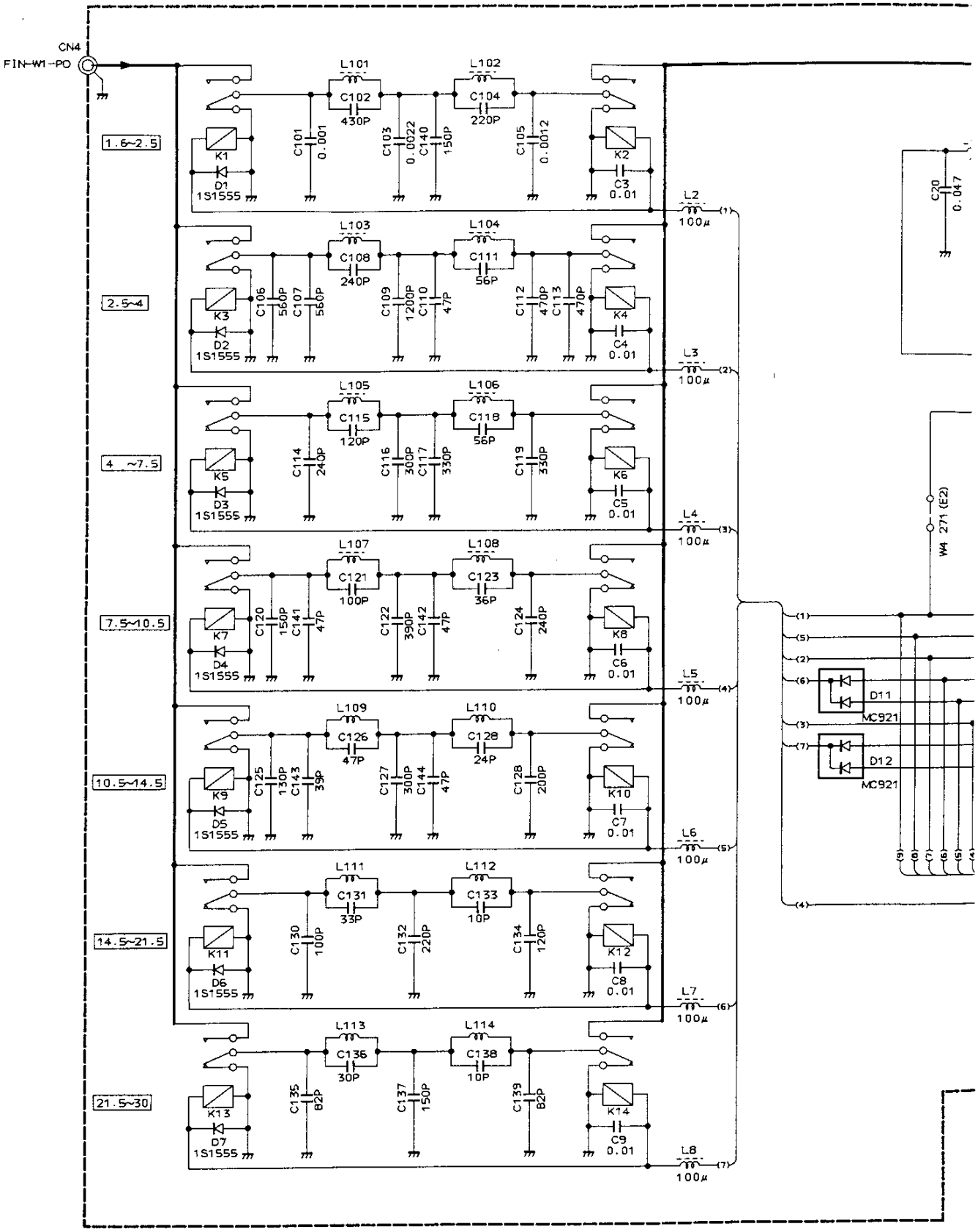

(X51-306X-XX) A/3

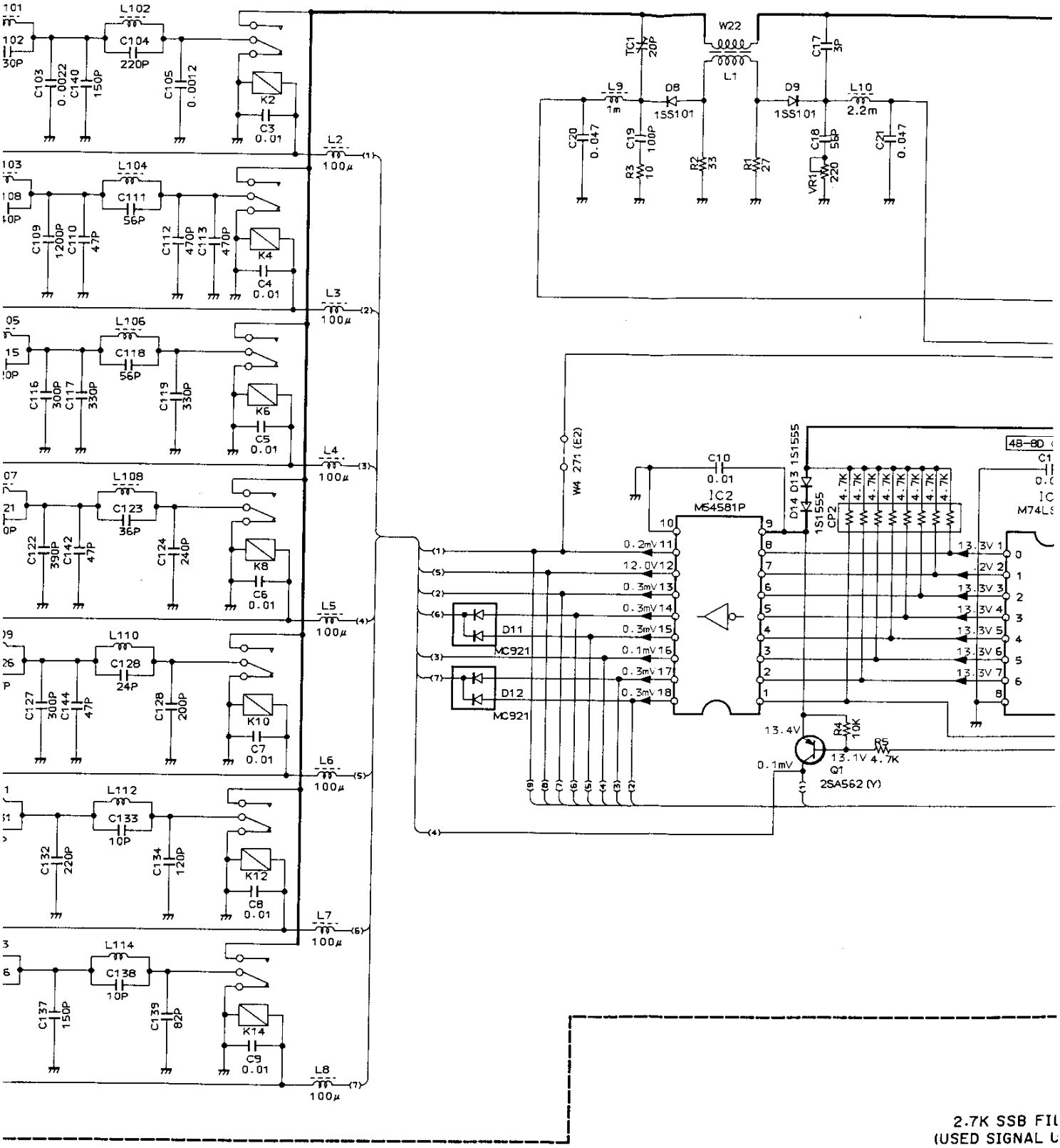

2.7K SSB FIL
(USED SIGNAL U

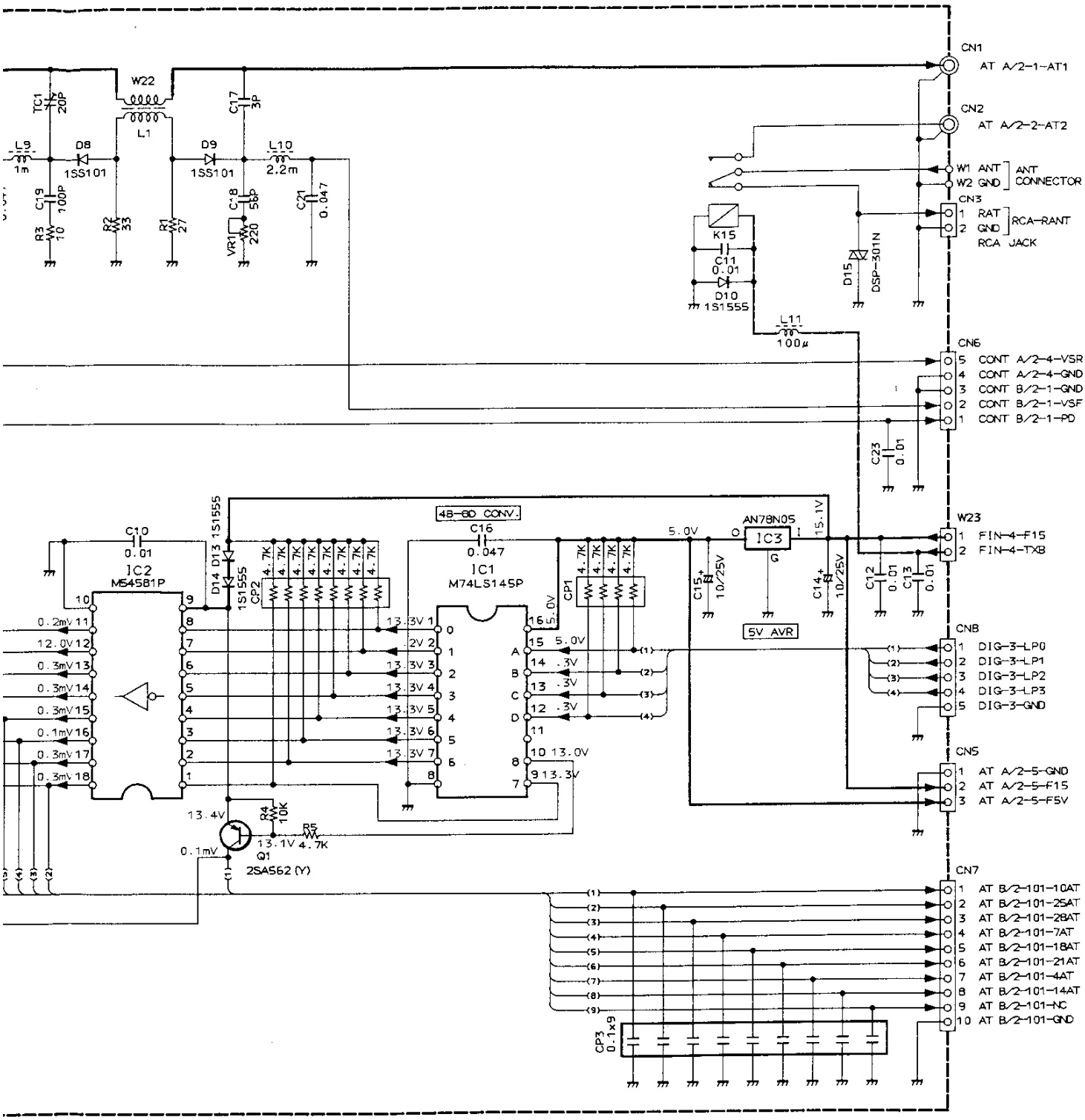
CN1
AT A/2-1-AT1
CN2
AT A/2-2-AT2
W1 ANT
W2 GND
ANT CONNECTOR
CN3
1 RAT
2 GND
RCA-RANT
RCA JACK
CN6
5 CONT A/2-4-VSR
4 CONT A/2-4-GND
3 CONT B/2-1-GND
2 CONT B/2-1-VSF
1 CONT B/2-1-PD
W23
1 FIN-4-F15
2 FIN-4-TXB
CN8
1 DIG-3-LP0
2 DIG-3-LP1
3 DIG-3-LP2
4 DIG-3-LP3
5 DIG-3-GND
CN5
1 AT A/2-5-GND
2 AT A/2-5-F15
3 AT A/2-5-F5V
CN7
1 AT B/2-101-10AT
2 AT B/2-101-25AT
3 AT B/2-101-28AT
4 AT B/2-101-7AT
5 AT B/2-101-18AT
6 AT B/2-101-21AT
7 AT B/2-101-4AT
8 AT B/2-101-14AT
9 AT B/2-101-NC
10 AT B/2-101-GND
W22
L1
TC1 20P
C17 3P
L9 1m
D8 1SS101
D9 1SS101
L10 2.2m
C19 100P
R3 10
R2 33
R1 27
C18 560
VR1 220
C21 0.047
K15
C11 0.01
D10 1S1555
D15 DSP-301N
L11 100μ
C23 0.01
C10 0.01
IC2 M54581P
D14 D13 1S1555
1S1555
CP2 4.7K
48-8D CONV.
C16 0.047
IC1 M74LS145P
CP1 4.7K
5.0V
AN78N05
IC3
15.1V
C15 10/25V
C14 10/25V
C12 0.01
C13 0.01
5V AVR
0.2mV
12.0V
0.3mV
0.1mV
13.4V
R4 10K
R5 4.7K
13.1V
Q1 2SA562 (Y)
CP3 0.1x9
CN10
CN11
CF1
2.7K SSB FILTER
(USED SIGNAL UNIT)
B/3 (003)
IC1 : M74LS145P
or SN74LS145N
IC2 : M54581P
IC3 : AN78N05
Q1 : 2SA562 (Y)
D1~7, 10, 13, 14 : 1S1555
D8, 9 : 1SS101
D11, 12 : MC921
D15 : DSP-301N

TS-950SDX PC BOARD VIEWS

AT UNIT (X53-3340-01) Component side view

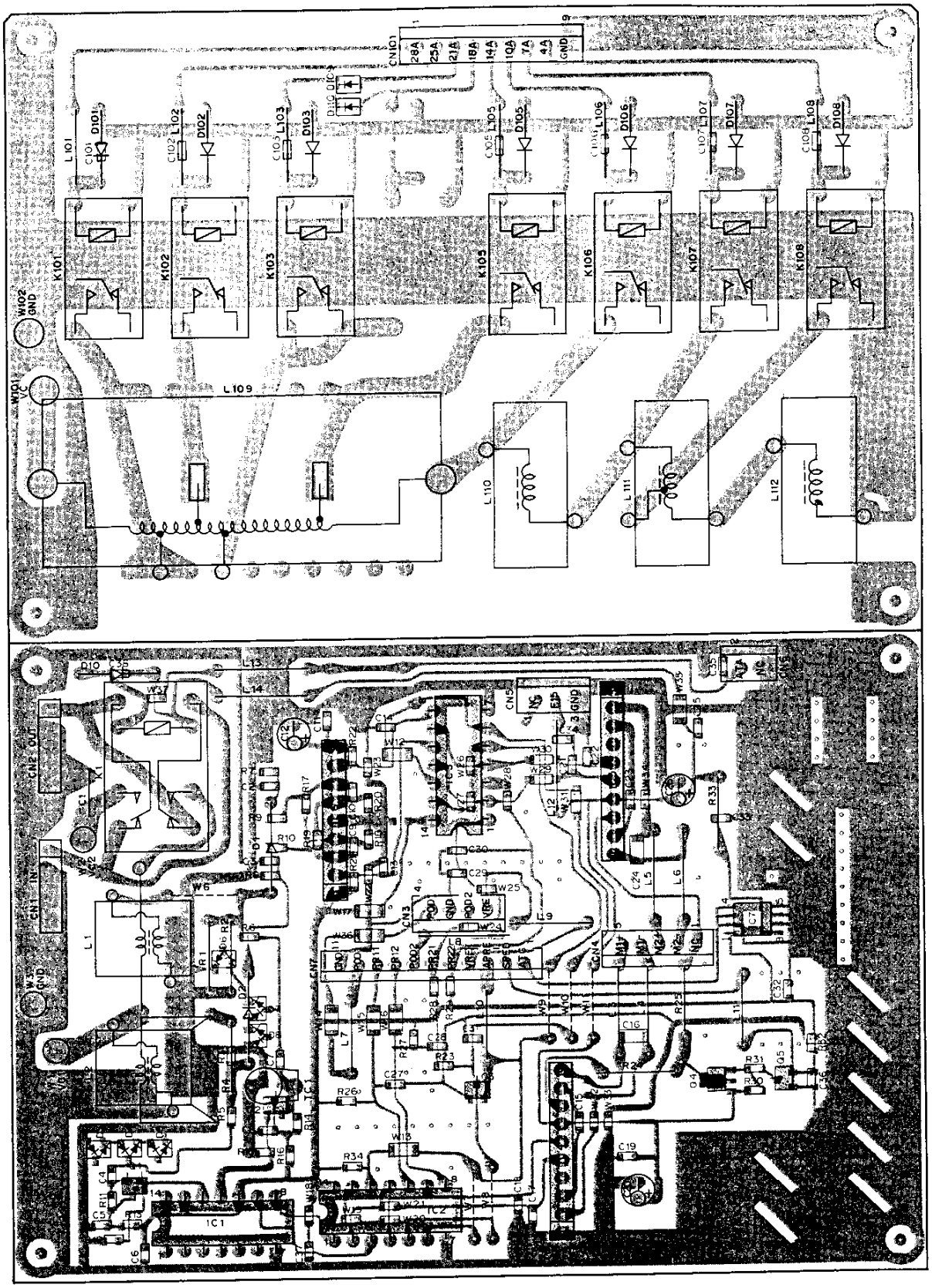

UNIT (X53-3340-01) Foil side view

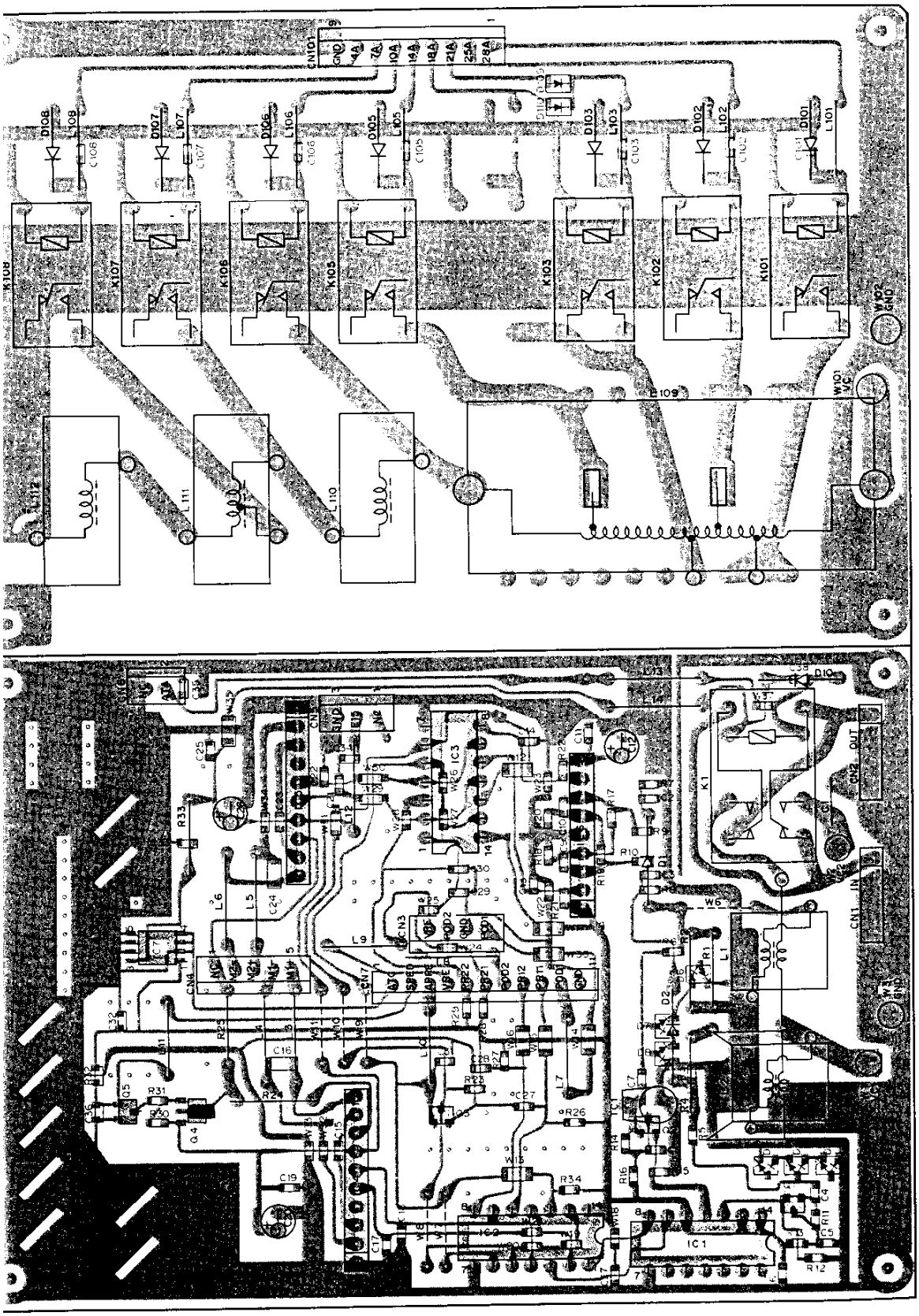

NJM2903S

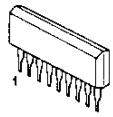

SN74S74N

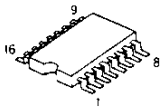

TC4066BP

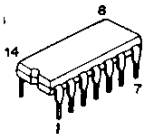

2SA1204

2SC2714
DTC114EK

MC78L05M

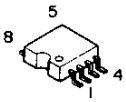

BA6109U2

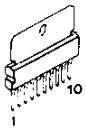

AT UNIT (X53-3340-01)

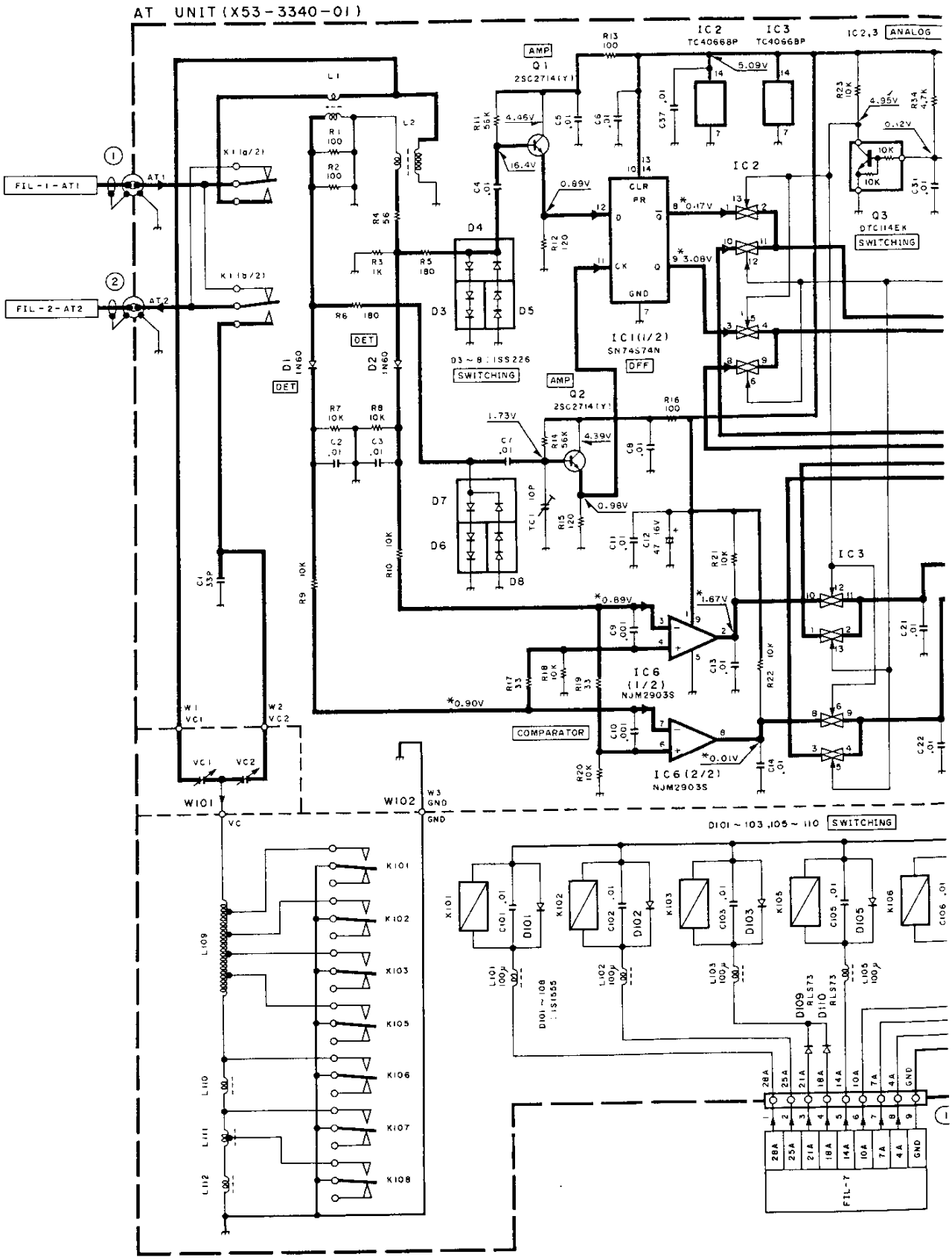

CIRCUIT D

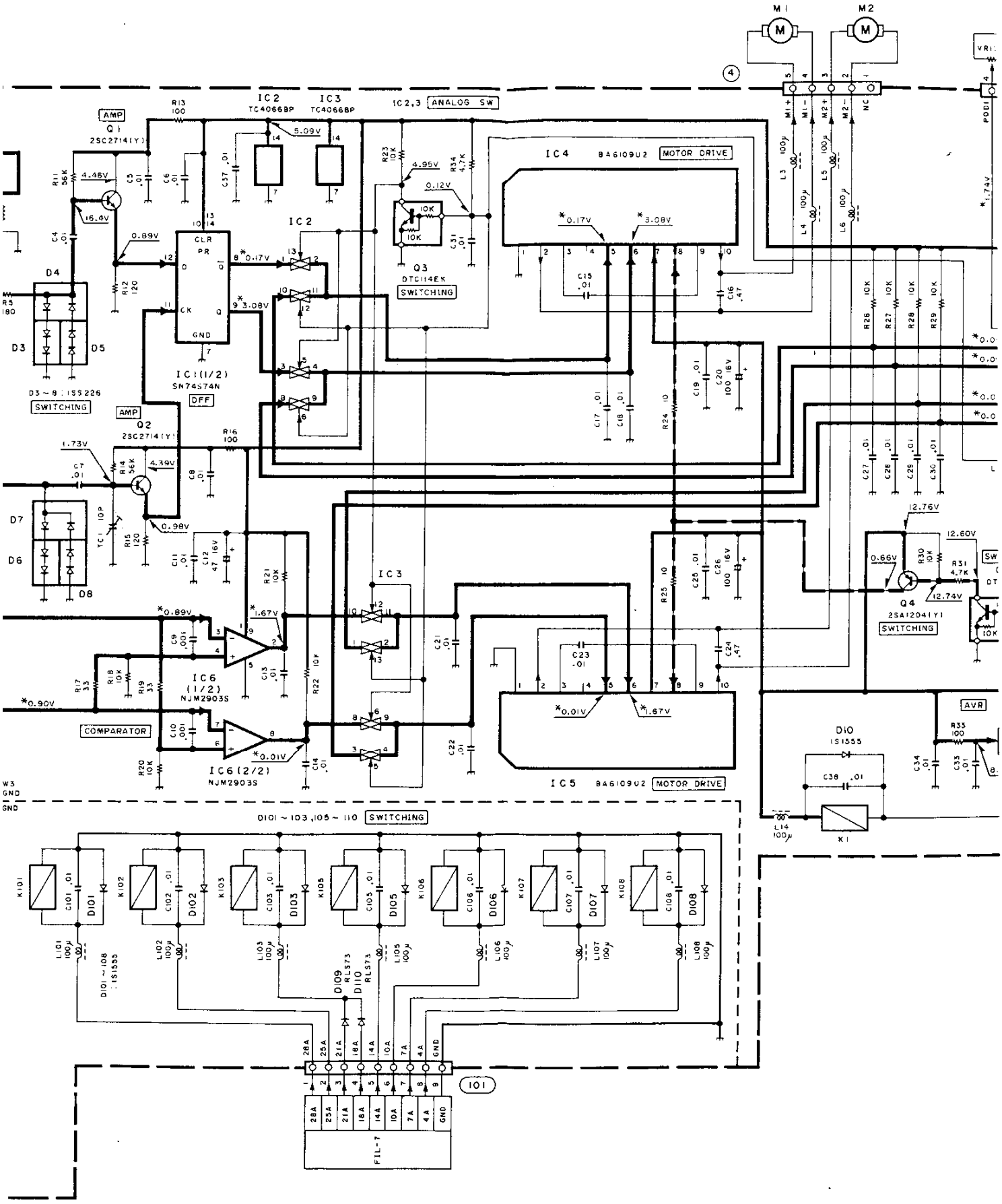
M1
M2
IC2
TC4066BP
IC3
TC4066BP
IC2,3 ANALOG SW
AMP
Q1
2SC2714(Y)
IC4 BA6109U2 MOTOR DRIVE
Q3
DTC114EK
SWITCHING
IC1(1/2)
SN74S74N
DFF
D3~8 : 1SS226
SWITCHING
Q2
2SC2714(Y)
IC6 (1/2)
NJM2903S
COMPARATOR
IC6 (2/2)
NJM2903S
IC5 BA6109U2 MOTOR DRIVE
Q4
2SA1204(Y)
SWITCHING
AVR
D10
1S1555
K1
D101~103,105~110 SWITCHING
D101~108
1S1555
D109
RLS73
D110
RLS73
101
FIL-7

CIRCUIT DIAGRAM TS-950SDX

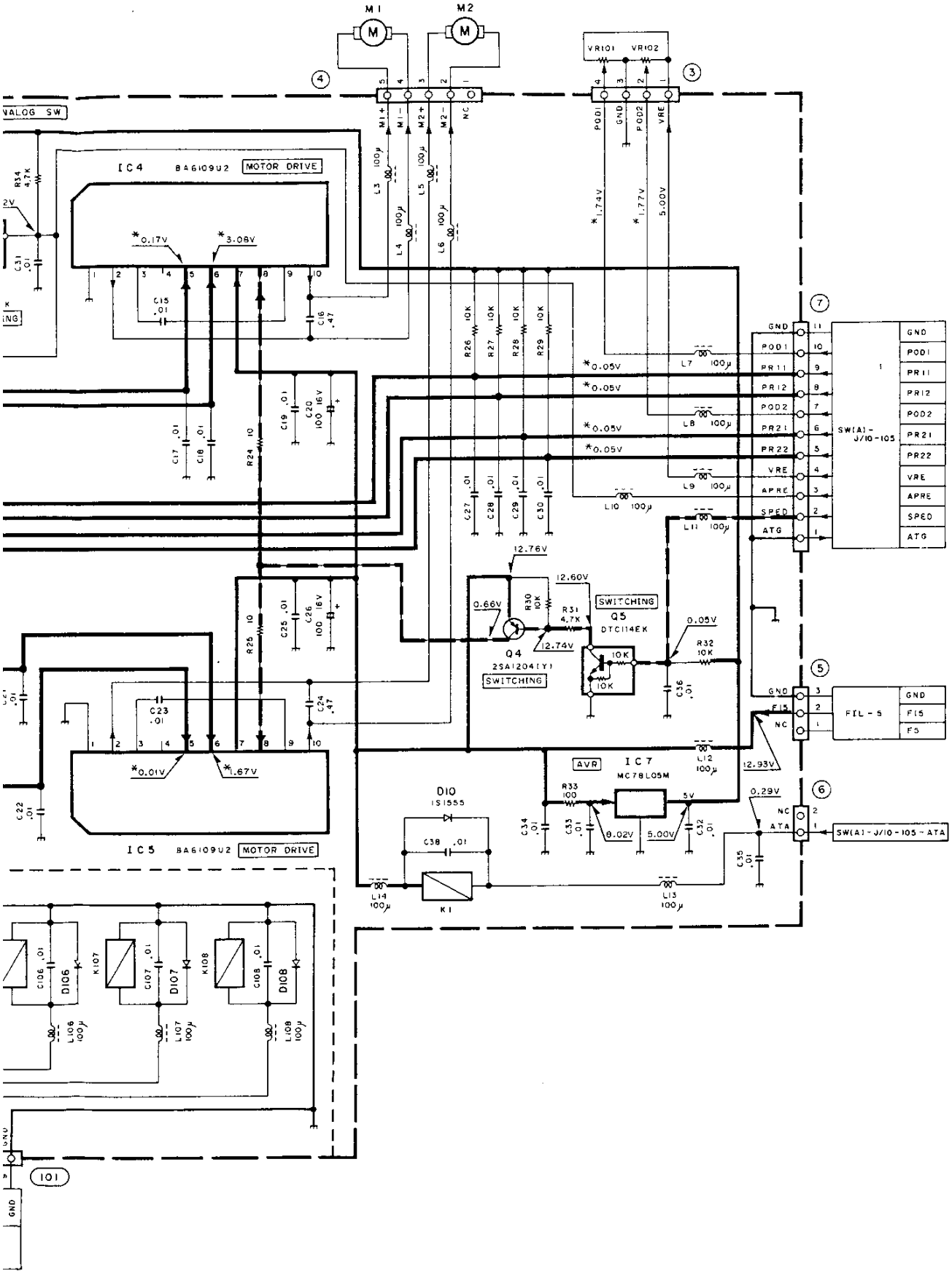

TS-950SDX PC BOARD VIEWS

CONTROL UNIT (X53-3380-00) Component side view

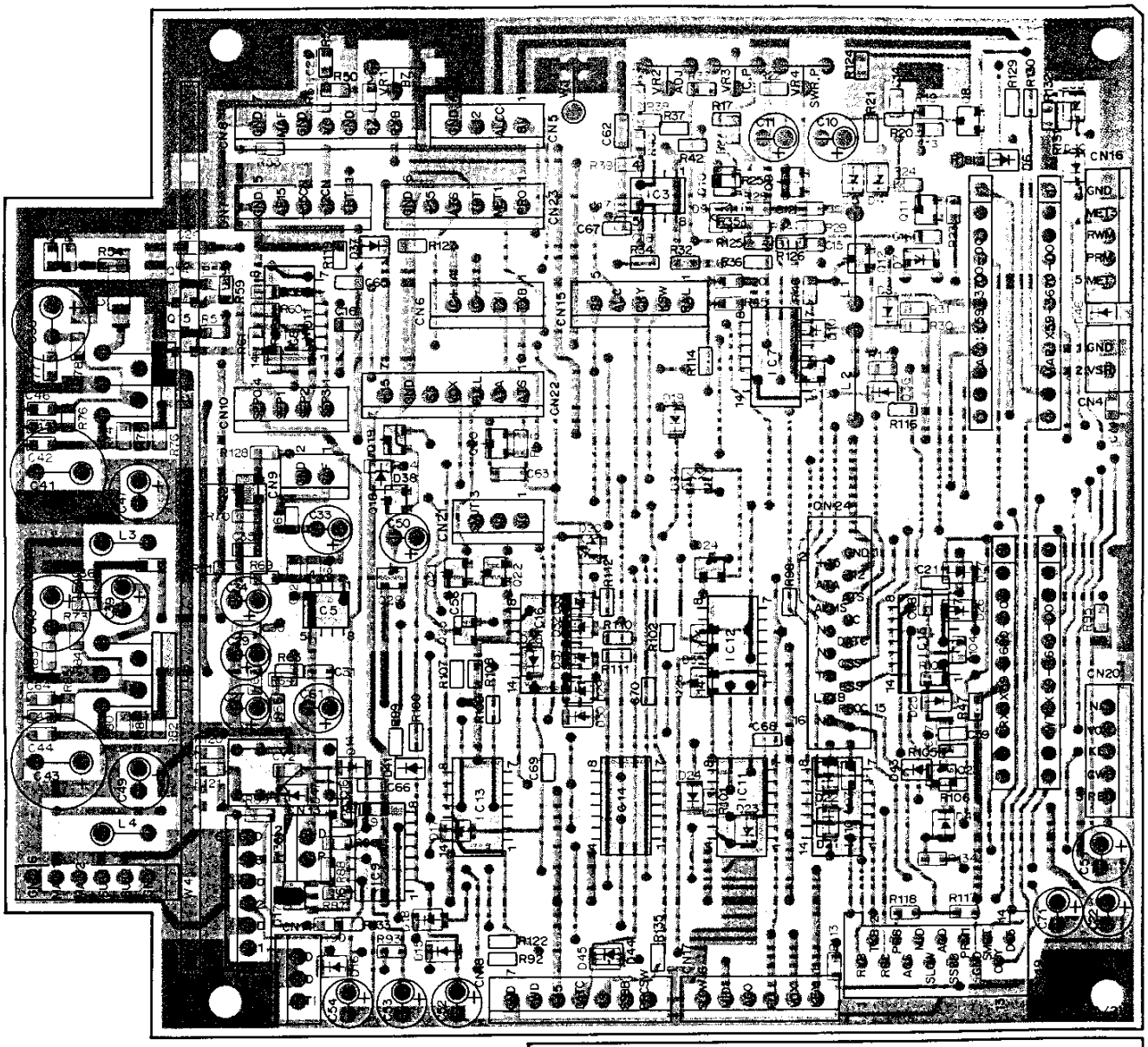

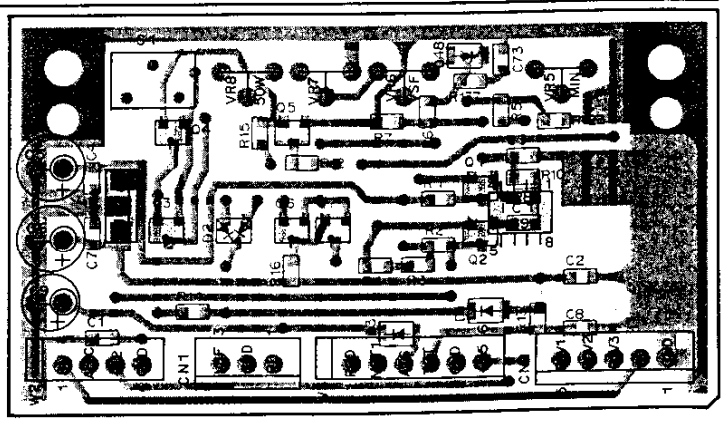

CONTROL UNIT (X53-3380-00) Foil side view

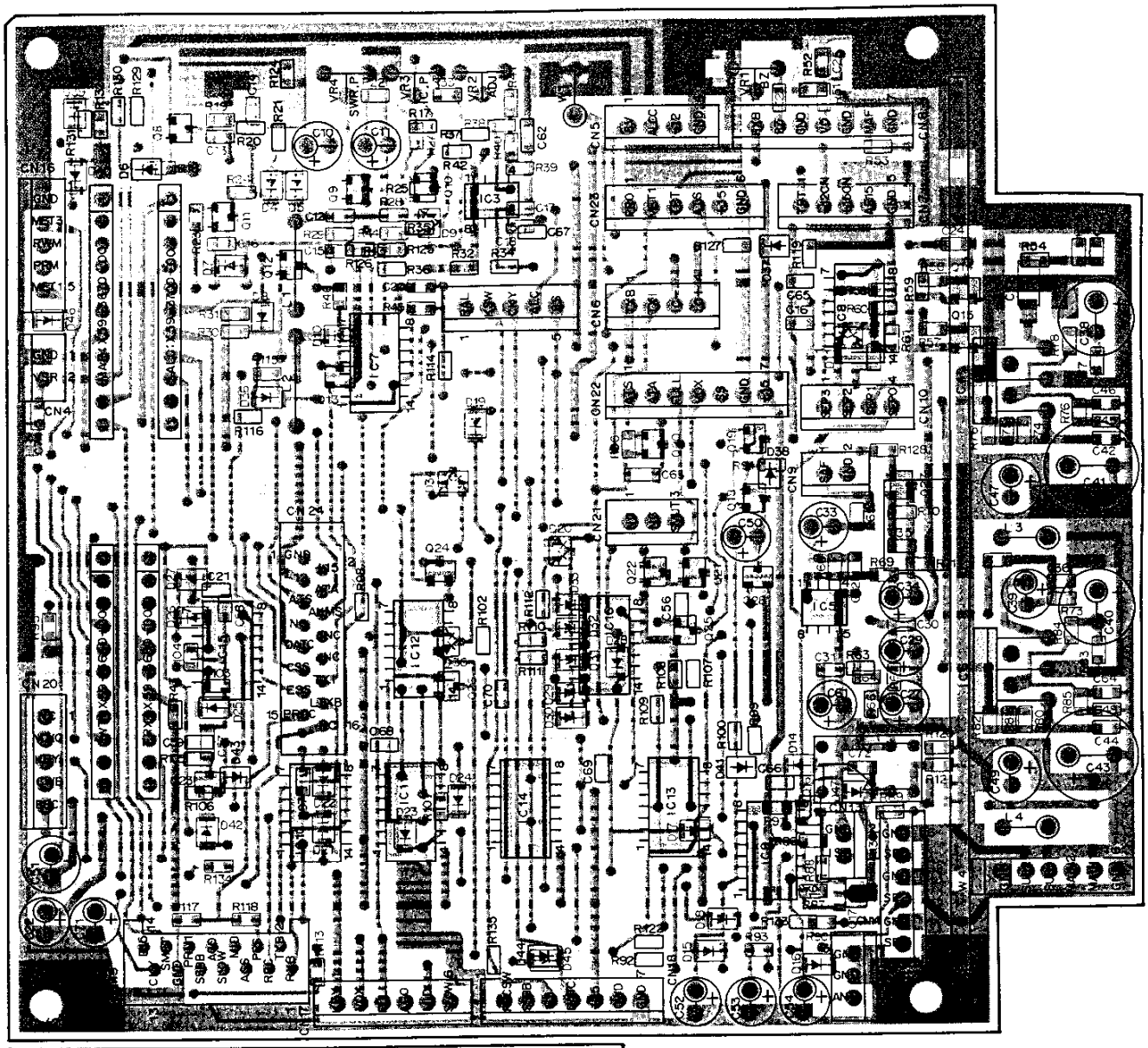

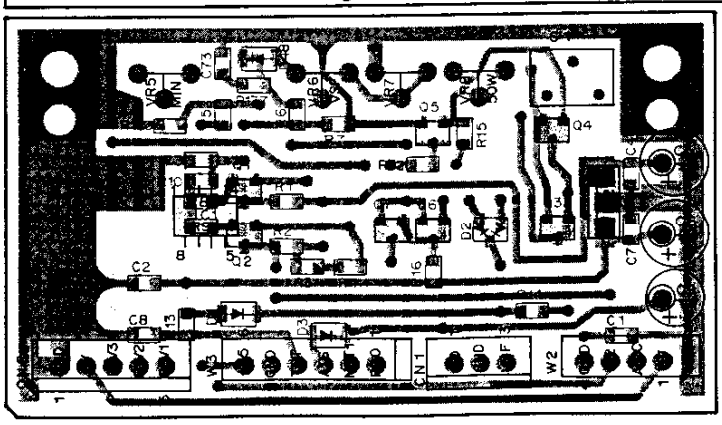

CONTROL UNIT (X53-3380-00)

2SC2712
2SD1757K
DTA124EK
DTC124EK
DTC144EK

NJM4558M

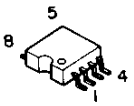

2SK208

TC4011BF
TC4066BF
TC4069UBF

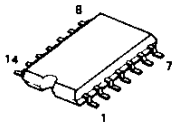

AN78N08

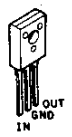

TC4538BF

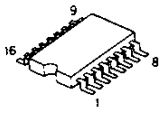

µPC2002V

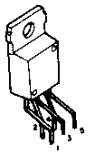

2SA1204

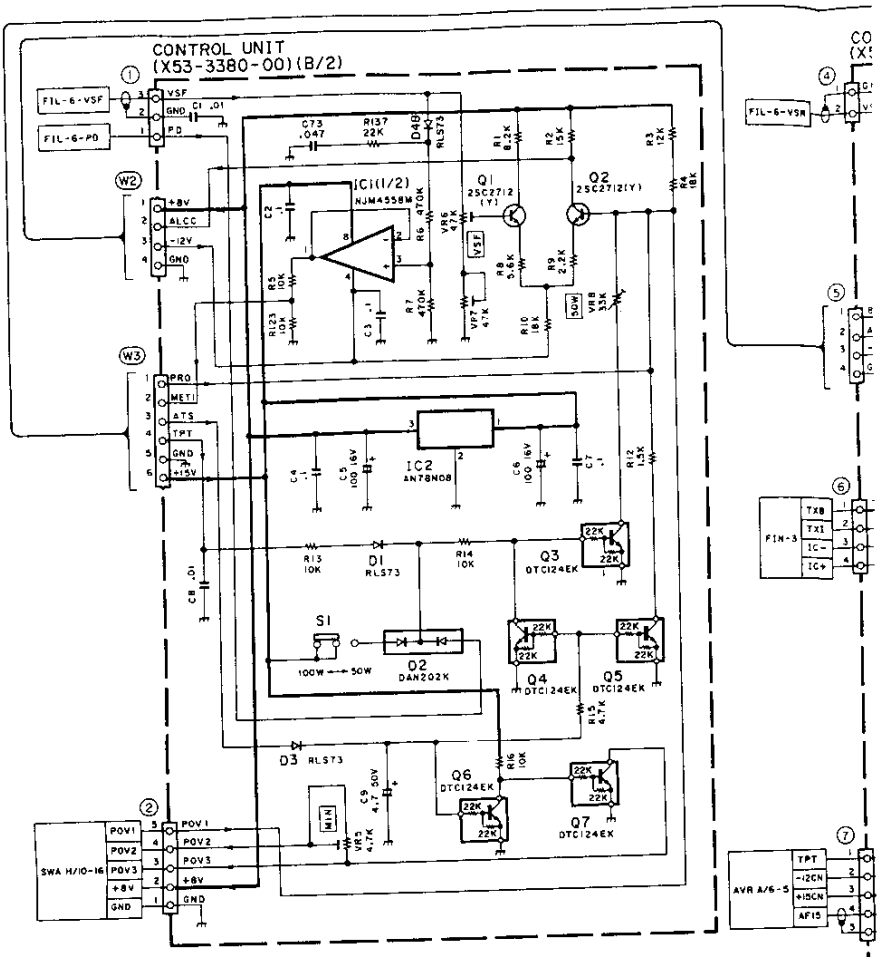

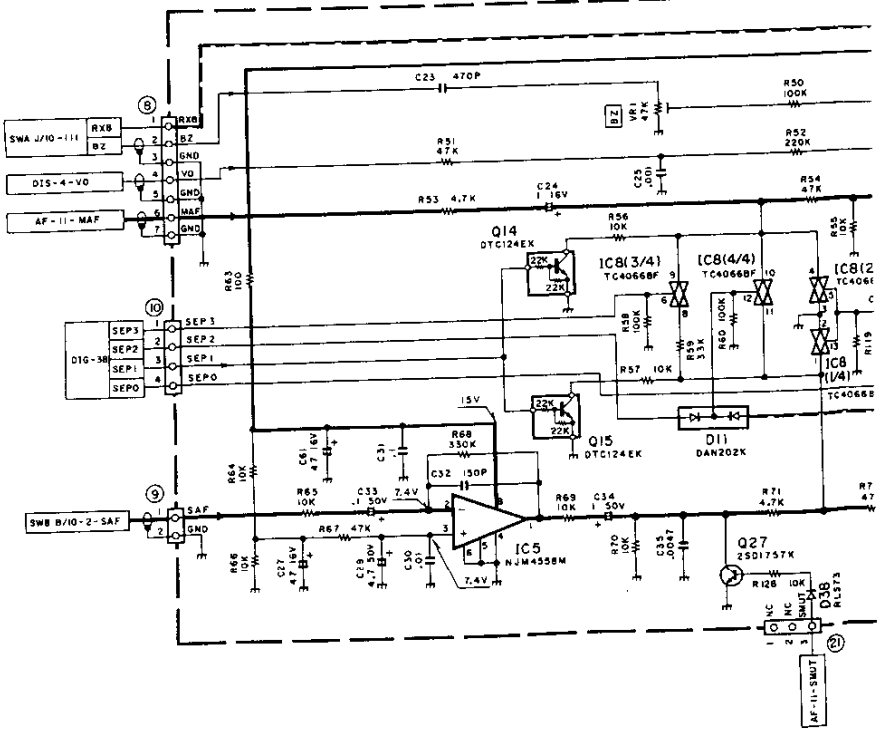

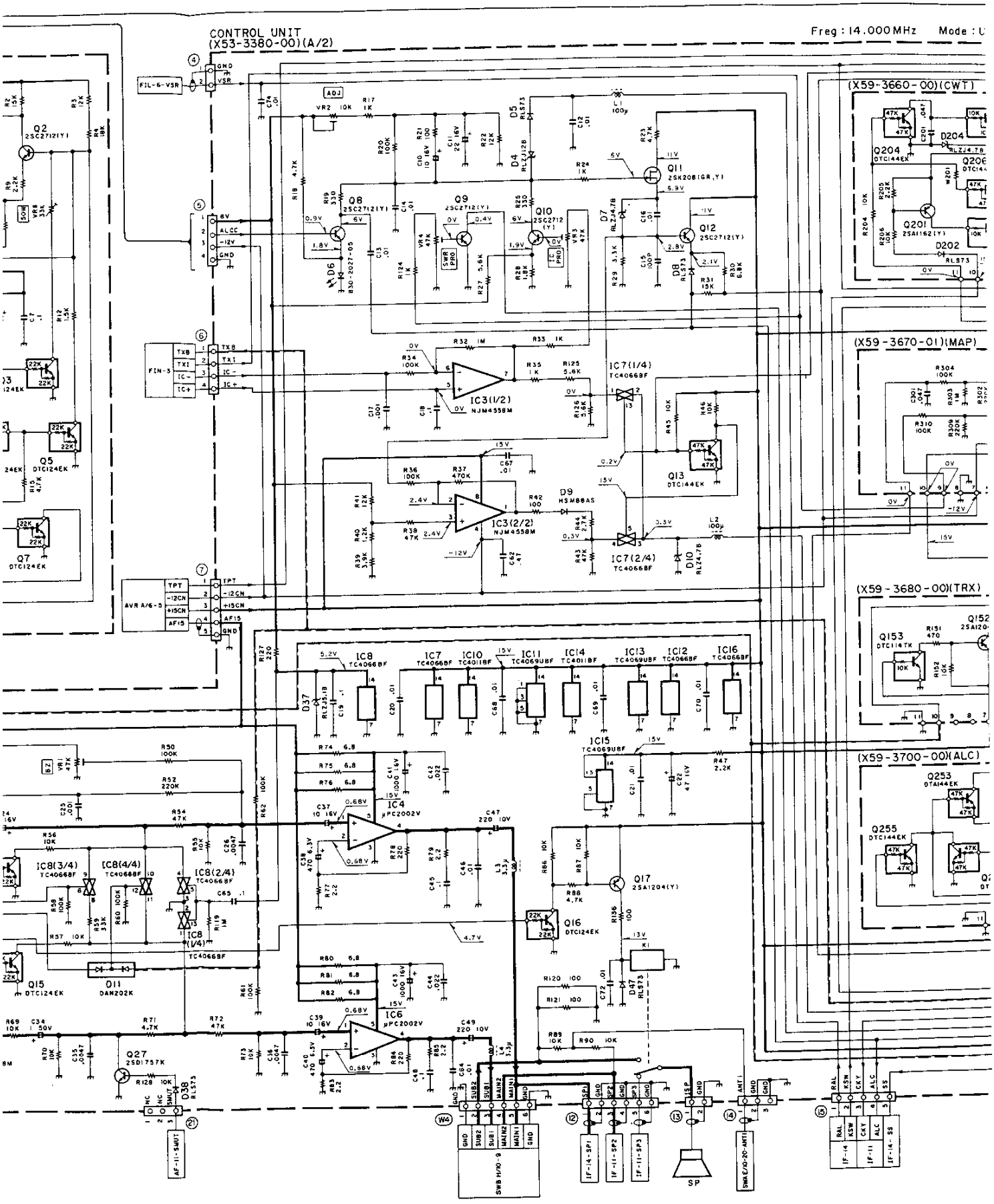
CONTROL UNIT
(X53-3380-00)(A/2)
Freg : 14.000MHz
Mode : U
(X59-3660-00)(CWT)
(X59-3670-01)(MAP)
(X59-3680-00)(TRX)
(X59-3700-00)(ALC)
Q2 2SC2712(Y)
Q5 DTC124EK
Q7 DTC124EK
Q8 2SC2712(Y)
Q9 2SC2712(Y)
Q10 2SC2712(Y)
Q11 2SK208(GR,Y)
Q12 2SC2712(Y)
Q13 DTC144EK
Q15 DTC124EK
Q16 DTC124EK
Q17 2SA1204(Y)
Q27 2SD1757K
Q204 DTC144EK
Q201 2SA1162(Y)
Q153 DTC114TK
Q253 DTA144EK
Q255 DTC144EK
IC3(1/2) NJM4558M
IC3(2/2) NJM4558M
IC7(1/4) TC4066BF
IC7(2/4) TC4066BF
IC4 μPC2002V
IC6 μPC2002V
IC8 TC4066BF
IC8(3/4) TC4066BF
IC8(4/4) TC4066BF
IC8(2/4) TC4066BF
IC8(1/4) TC4066BF
IC15 TC4069UBF
D11 DAN202K
D37 RLZ5.1B
D38 RLS73
D9 HSM88AS
D10 RLZ4.7B
D47 RLS73
D204 RLZJ4.7B
D202 RLS73
FIL-6-VSR
FIN-3
AVR A/6-5
AF-11-SMUT
SWB H/O-9
IF-14-SP1
IF-11-SP2
IF-11-SP3
SP
SWR E/O-20-ANT1
IF-14
IF-11
IF-14-SS

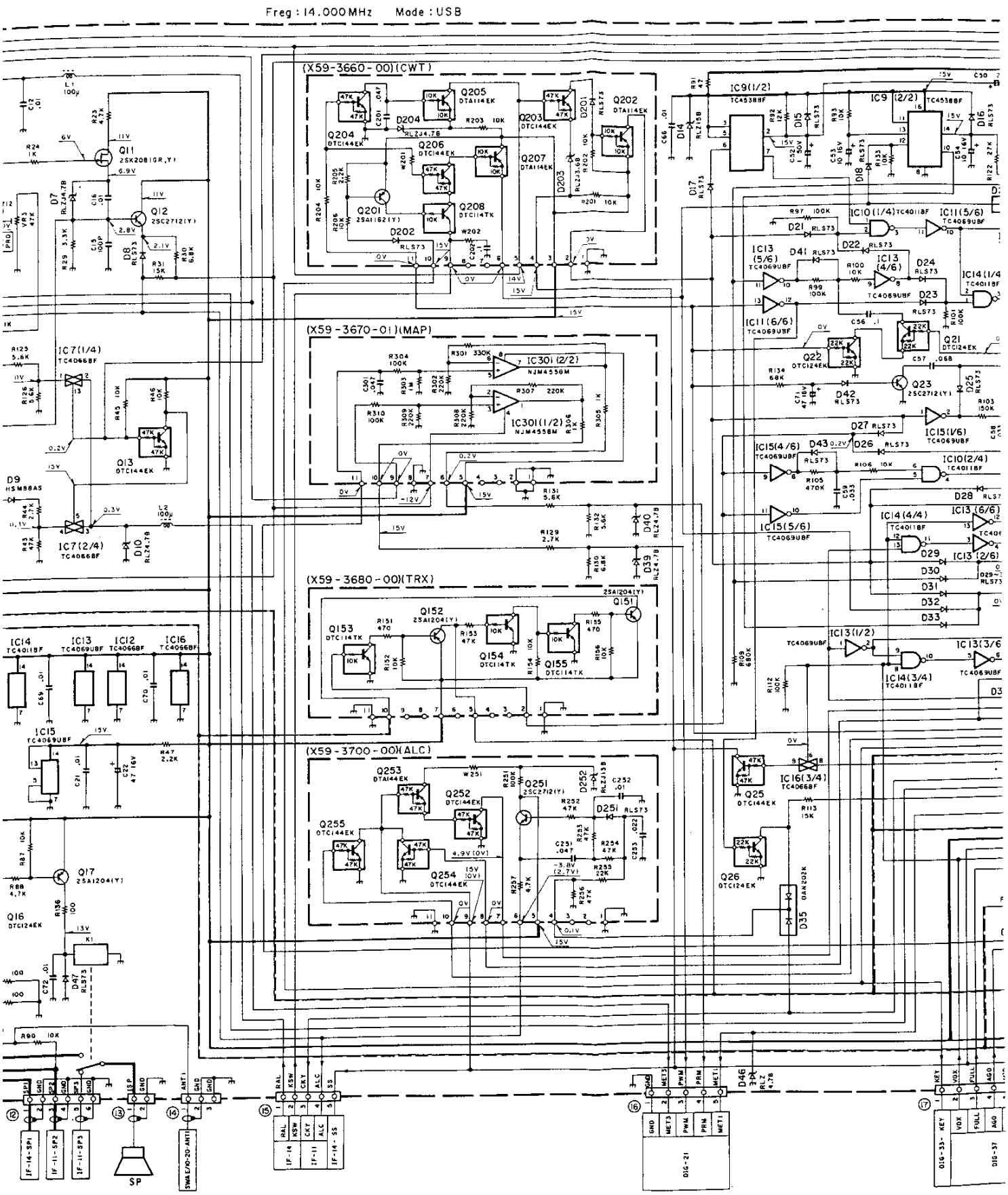
Freq : 14.000MHz Mode : USB
(X59-3660-00)(CWT)
(X59-3670-01)(MAP)
(X59-3680-00)(TRX)
(X59-3700-00)(ALC)
Q11 2SK208(GR,Y)
Q12 2SC2712(Y)
Q13 DTC144EK
Q17 2SA1204(Y)
Q16 DTC124EK
IC7(1/4) TC4066BF
IC7(2/4) TC4066BF
IC301(2/2) NJM4558M
IC301(1/2) NJM4558M
IC9(1/2) TC4538BF
IC9(2/2) TC4538BF
IC10(1/4) TC4011BF
IC11(5/6) TC4069UBF
IC13(5/6) TC4069UBF
IC13(4/6) TC4069UBF
IC11(6/6) TC4069UBF
IC15(4/6) TC4069UBF
IC15(5/6) TC4069UBF
IC15(1/6) TC4069UBF
IC10(2/4) TC4011BF
IC14(4/4) TC4011BF
IC13(1/2) TC4069UBF
IC14(3/4) TC4011BF
IC16(3/4) TC4066BF
IC14 TC4011BF
IC13 TC4069UBF
IC12 TC4066BF
IC16 TC4066BF
IC15 TC4069UBF
SP
IF-14-SP1
IF-11-SP2
IF-11-SP3
SWA E/O-20-ANT1
IF-14
IF-11
IF-14-SS
DIG-21
DIG-33
DIG-37

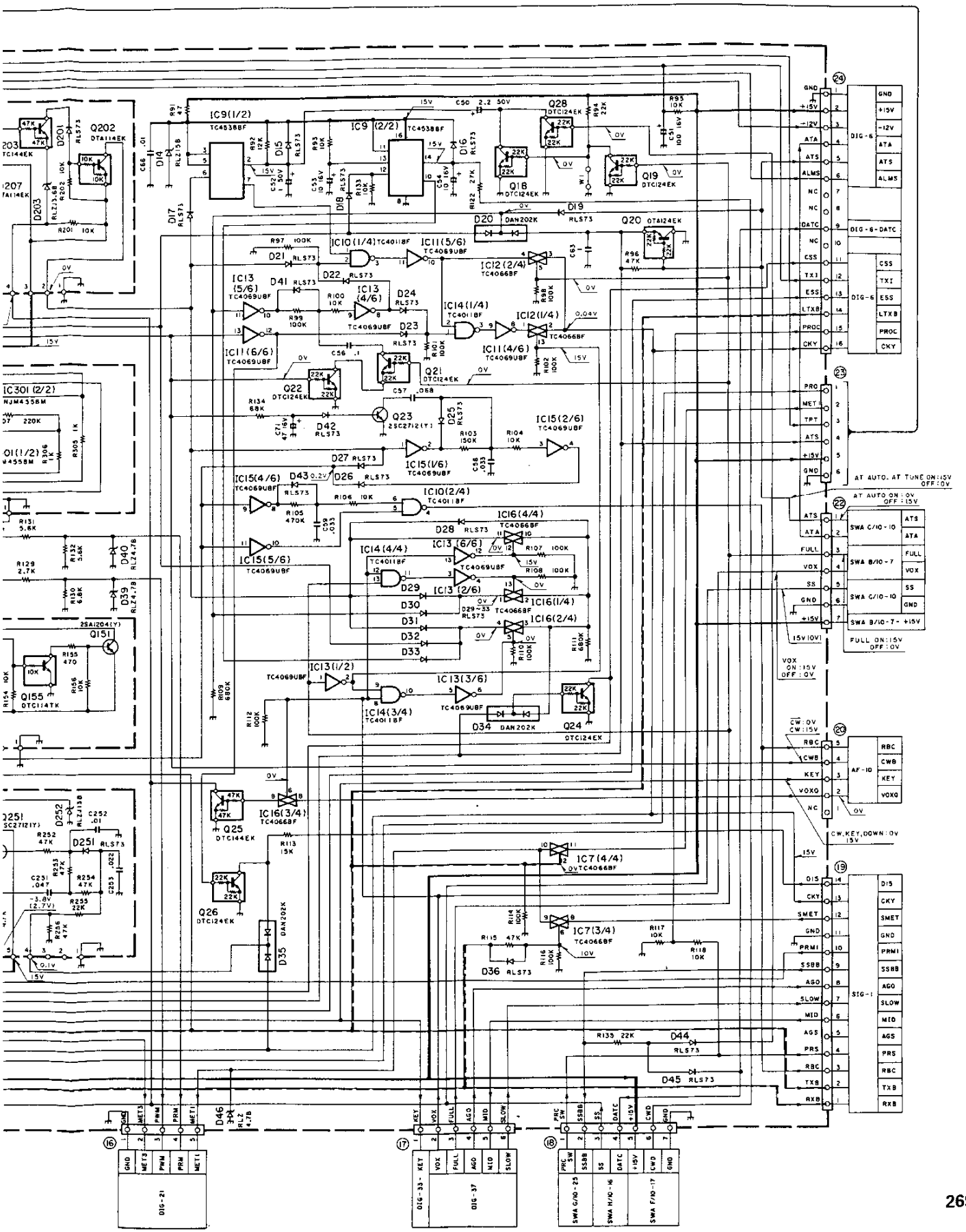
IC9(1/2)
TC4538BF
IC9 (2/2)
TC4538BF
Q28
DTC124EK
Q18
DTC124EK
Q19
DTC124EK
Q20
DTA124EK
D20
DAN202K
IC10(1/4)
TC4011BF
IC11(5/6)
TC4069UBF
IC12(2/4)
TC4066BF
IC13 (5/6)
TC4069UBF
IC13 (4/6)
TC4069UBF
IC14(1/4)
TC4011BF
IC12(1/4)
TC4066BF
IC11(6/6)
TC4069UBF
IC11(4/6)
TC4069UBF
Q21
DTC124EK
Q22
DTC124EK
Q23
2SC2712(Y)
IC15(2/6)
TC4069UBF
IC15(1/6)
TC4069UBF
IC15(4/6)
TC4069UBF
IC10(2/4)
TC4011BF
IC16(4/4)
TC4066BF
IC14(4/4)
TC4011BF
IC13 (6/6)
TC4069UBF
IC15(5/6)
TC4069UBF
IC13 (2/6)
TC4066BF
IC16(1/4)
IC16(2/4)
IC13(1/2)
TC4069UBF
IC13(3/6)
TC4069UBF
IC14(3/4)
TC4011BF
D34
DAN202K
Q24
DTC124EK
Q25
DTC144EK
IC16(3/4)
TC4066BF
Q26
DTC124EK
D35
DAN202K
IC7(4/4)
TC4066BF
IC7(3/4)
TC4066BF
D36
RLS73
D44
RLS73
D45
RLS73
D46
RLZ 4.7B
Q151
2SA1204(Y)
Q155
DTC114TK
Q202
DTA114EK
Q201
DTC144EK
IC301 (2/2)
NJM4558M
IC301(1/2)
NJM4558M
D251
2SC2712(Y)
D252
RLZ113B
D40
RLZ4.7B
D39
RLZ4.7B
D41
RLS73
D42
RLS73
D43
RLS73
D24
RLS73
D23
RLS73
D25
RLS73
D27
RLS73
D26
RLS73
D28
RLS73
D29
D30
D31
D32
D33
D14
RLZ15B
D15
RLS73
D16
RLS73
D17
RLS73
D18
RLS73
D19
RLS73
D21
RLS73
D22
RLS73
D251
RLS73
GND
+15V
-12V
ATA
ATS
ALMS
NC
DATC
CSS
TXI
ESS
LTXB
PROC
CKY
PRO
MET1
TPT
SWA C/10-10
SWA B/10-7
SWA C/10-10
SWA B/10-7-+15V
FULL
VOX
SS
AT AUTO. AT TUNE ON:15V OFF:0V
AT AUTO ON:0V OFF:15V
FULL ON:15V OFF:0V
VOX ON:15V OFF:0V
CW:0V CW:15V
RBC
CWB
KEY
VOXQ
AF-10
CW,KEY,DOWN:0V 15V
DIS
SMET
PRMI
SSBB
AGO
SLOW
MID
AGS
PRS
TXB
RXB
SIG-1
DIG-6
DIG-6-DATC
DIG-21
DIG-33-KEY
DIG-37
SWA G/10-25
SWA H/10-16
SWA F/10-17
PWM
PRM
+15V
CWD

TS-950SDX CIRCUIT DIAGRAM

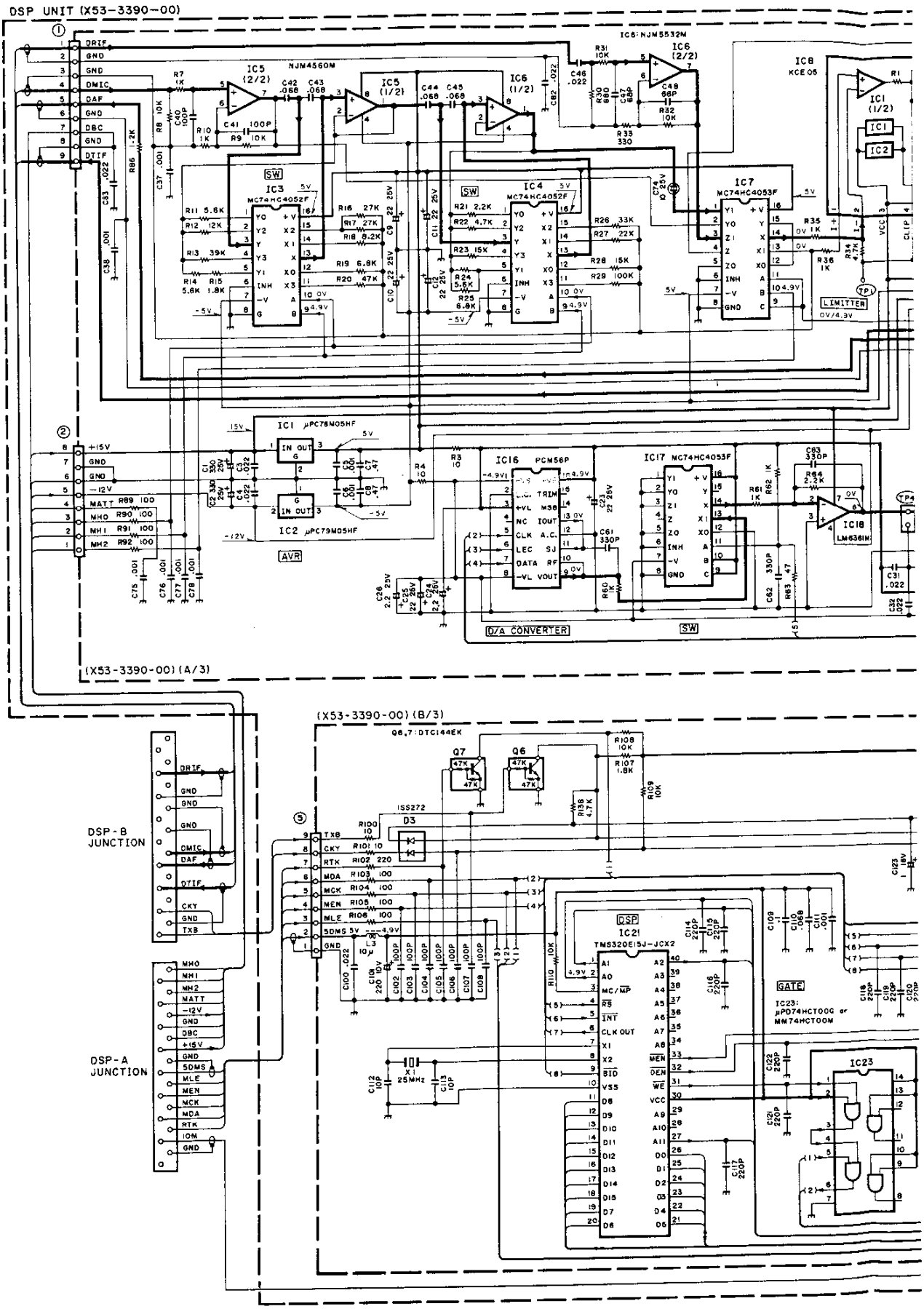

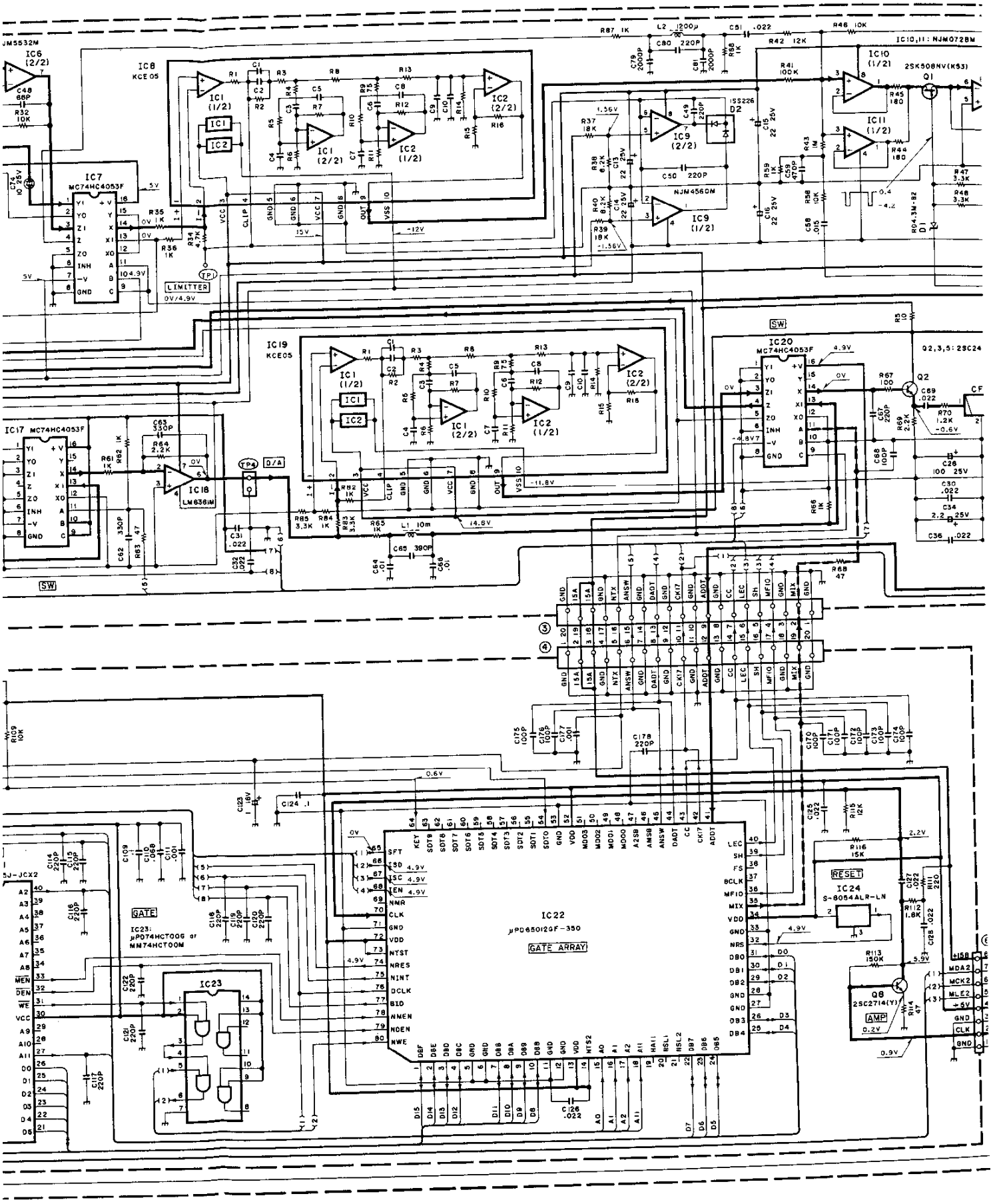
IC6 (2/2)
IC8 KCE05
IC7 MC74HC4053F
IC1 (1/2)
IC2 (2/2)
IC2 (1/2)
IC9 (2/2)
IC9 (1/2)
NJM4560M
IC10 (1/2)
IC11 (1/2)
2SK508NV(K53)
Q1
IC10,11: NJM072BM
LIMITTER
IC19 KCE05
IC20 MC74HC4053F
Q2,3,5: 2SC24
IC17 MC74HC4053F
IC18 LM636IM
D/A
SW
IC22 μPD65012GF-350
GATE ARRAY
IC23: μPD74HCT00G or MM74HCT00M
GATE
IC24 S-8054ALR-LN
RESET
Q8 2SC2714(Y)
AMP

DSP UNIT (X53-3390-00)

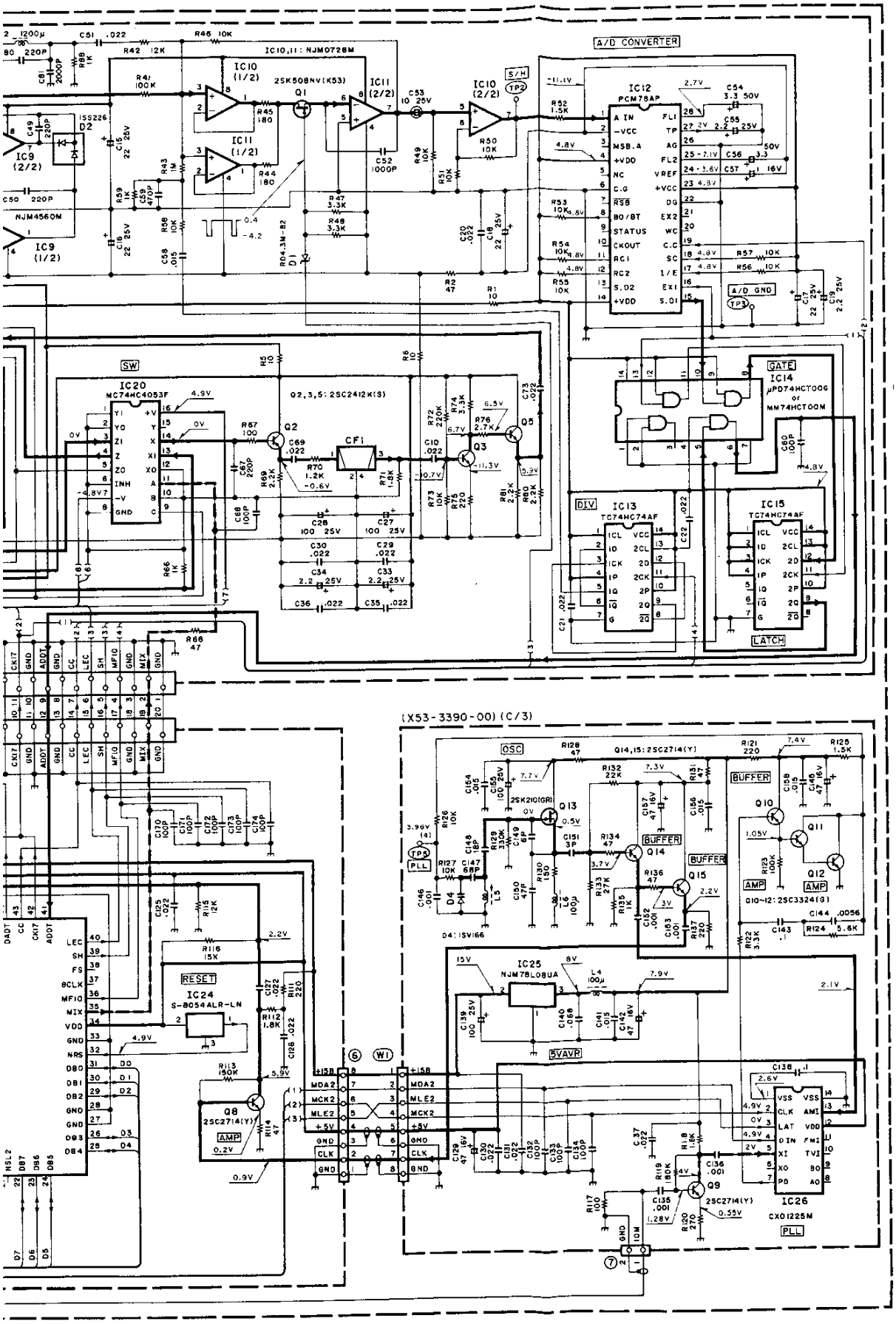

2SC241
2SC271
2SC332
DTC14

2SK210

2SK508

NJM78
μPC78
μPC79

S-8054

OUT

NJM07

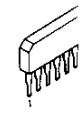

LM636
NJM45
NJM55

DSP UNIT (X53-3390-00)

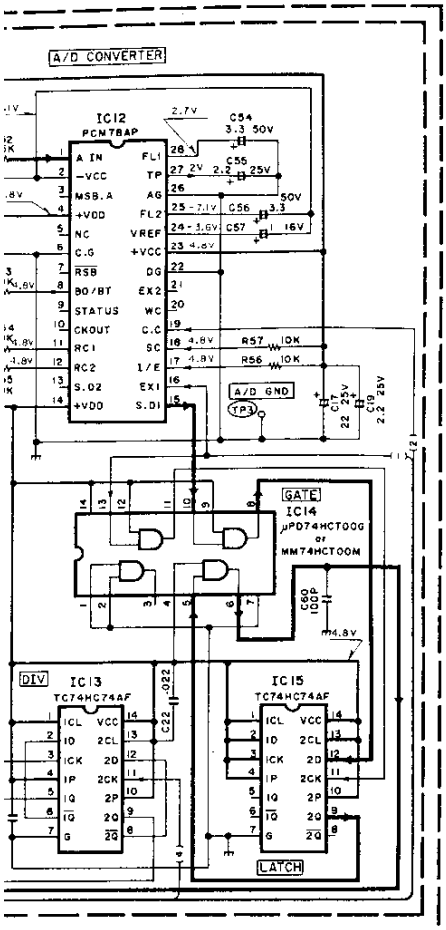

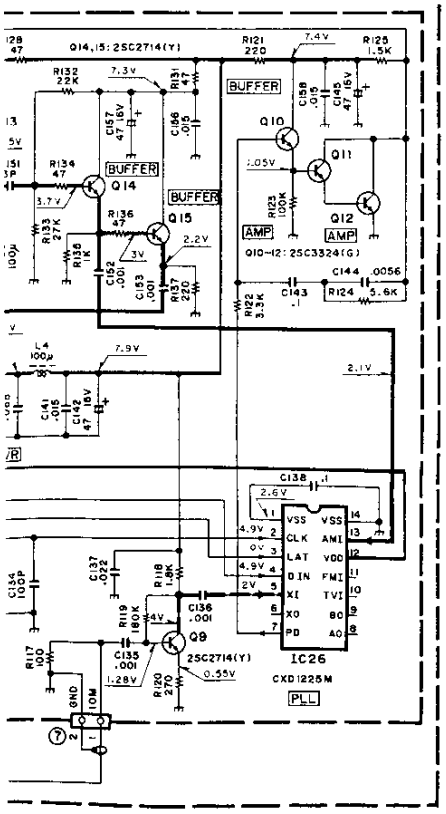

2SC2412K
2SC2714
2SC3324
DTC144EK

CXD1225M

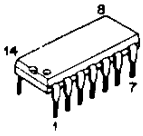

2SK210

PCM56P

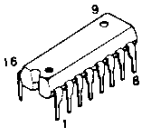

2SK508NV

MC74HC4052F
MC74HC4053F
TC74HC74AF

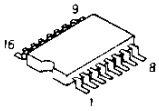

NJM78L08UA
μPC78M05HF
μPC79M05HF

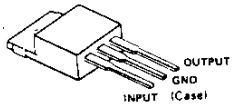

PCM78AP

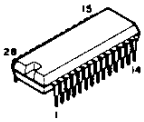

S-8054ALR-LN

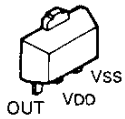

TMS320E15J-JCX2

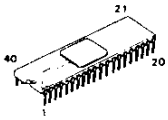

NJM072BM

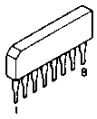

μPD65012GF-350

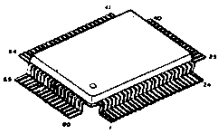

LM6361M
NJM4560M
NJM5532M

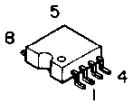

DSP UNIT (X53-3390-00) Component side view

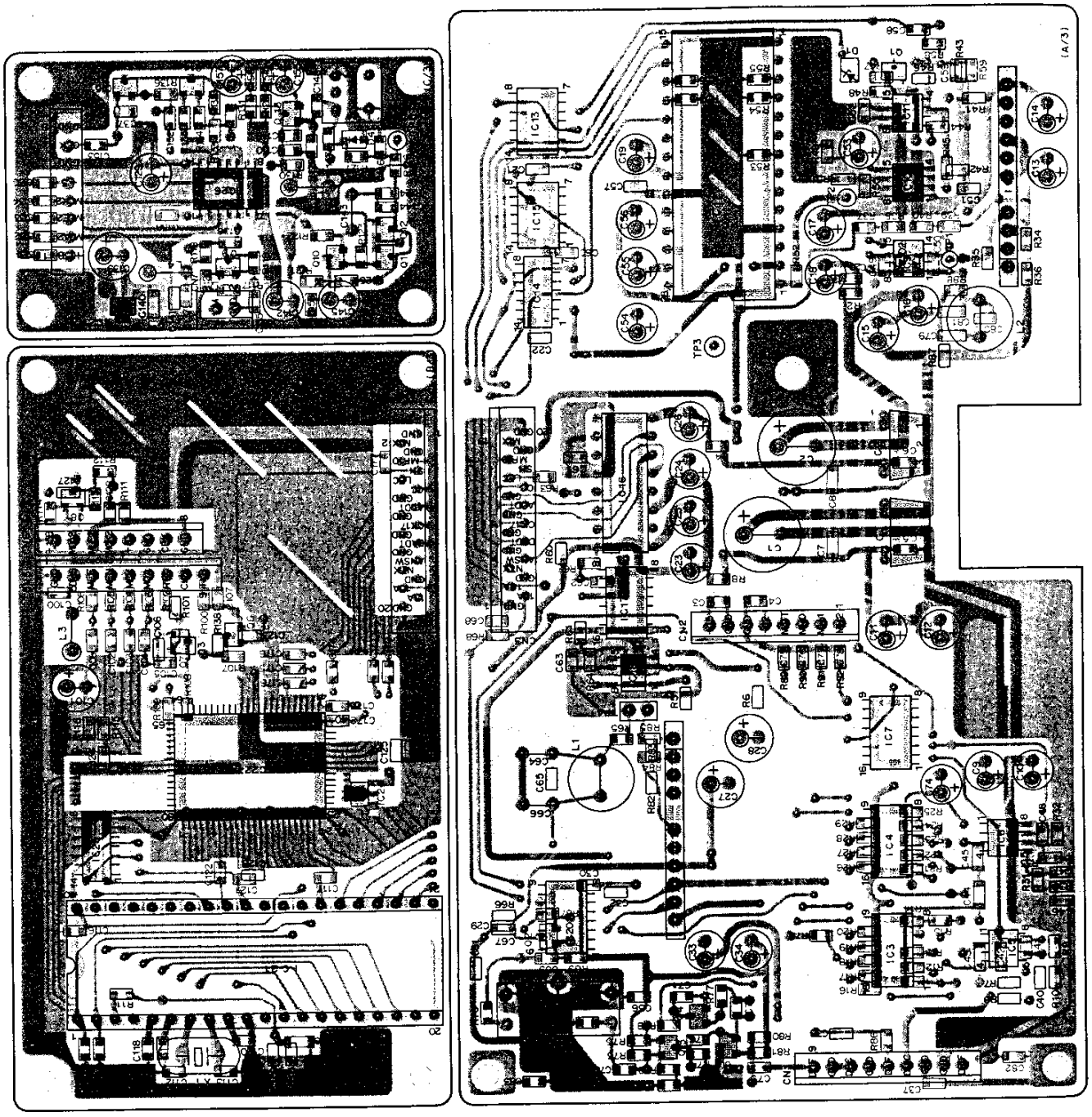

nt side view

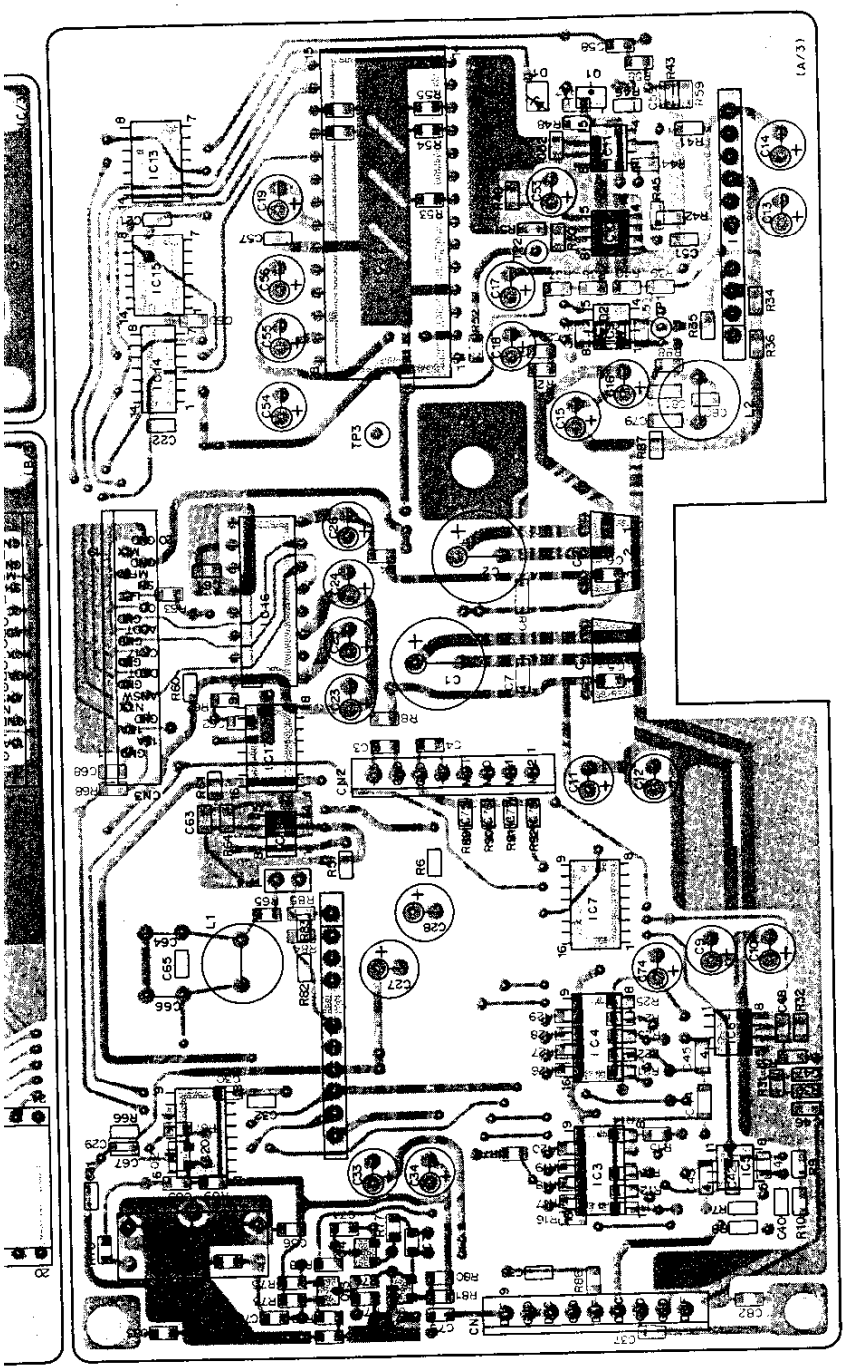

DSP UNIT (X53-3390-00) Foil side view

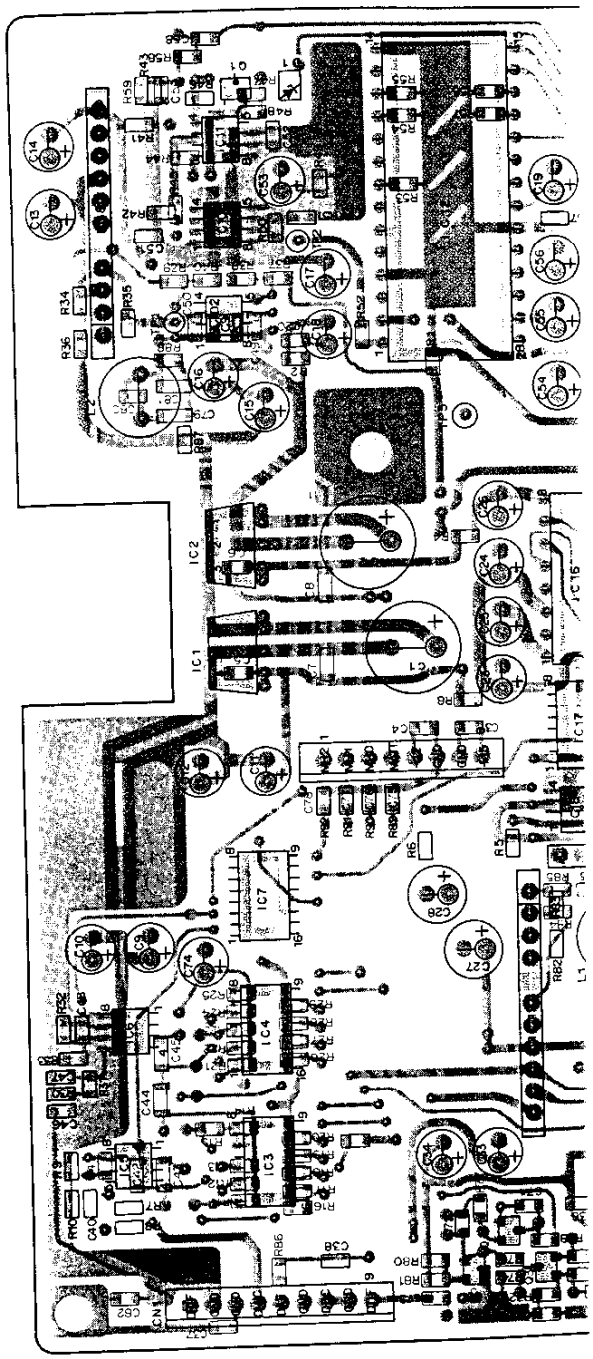

DSP UNIT (X53-3390-00) Foil side view

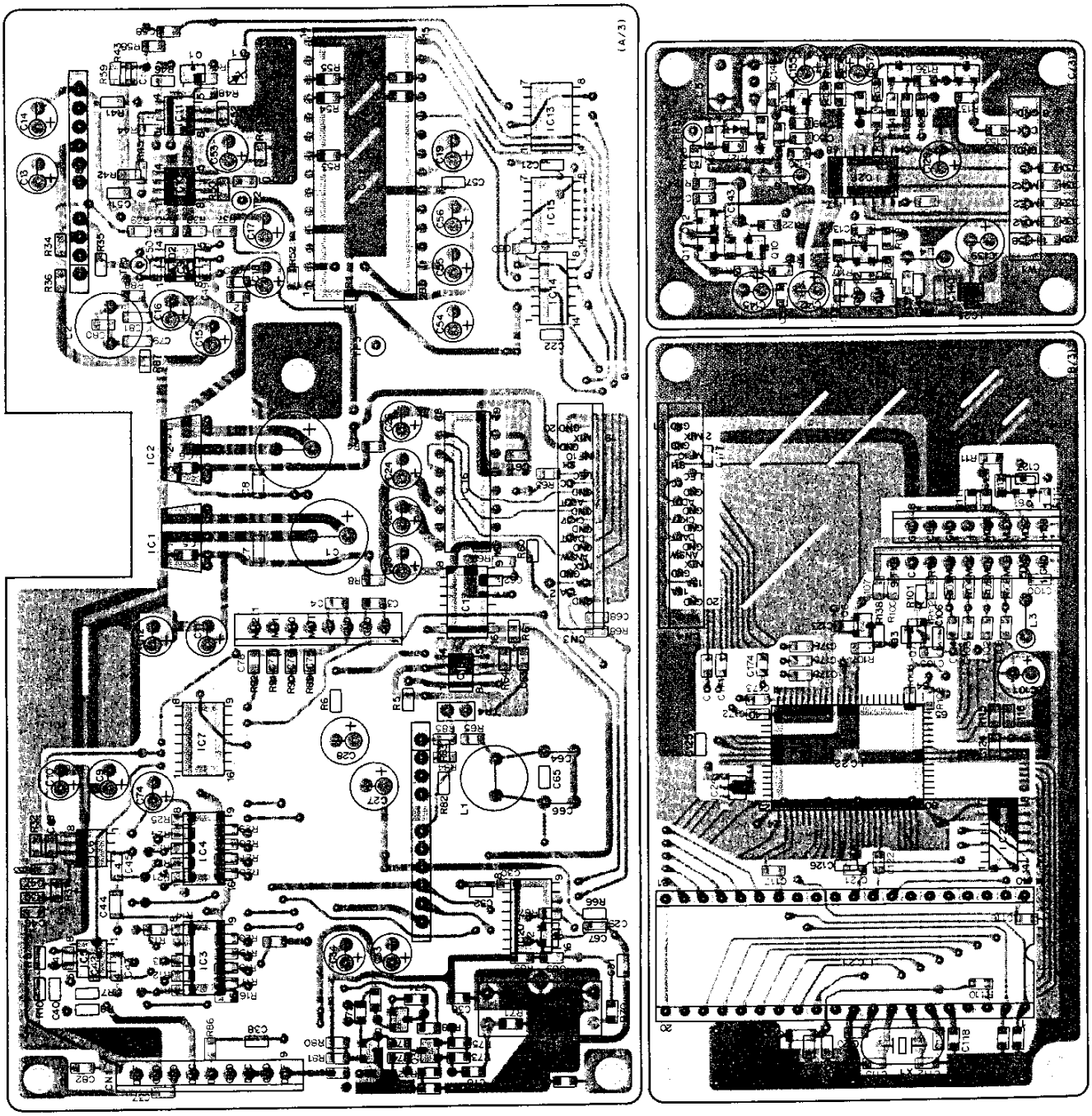

DISPLAY UNIT (X54-3080-01) Com

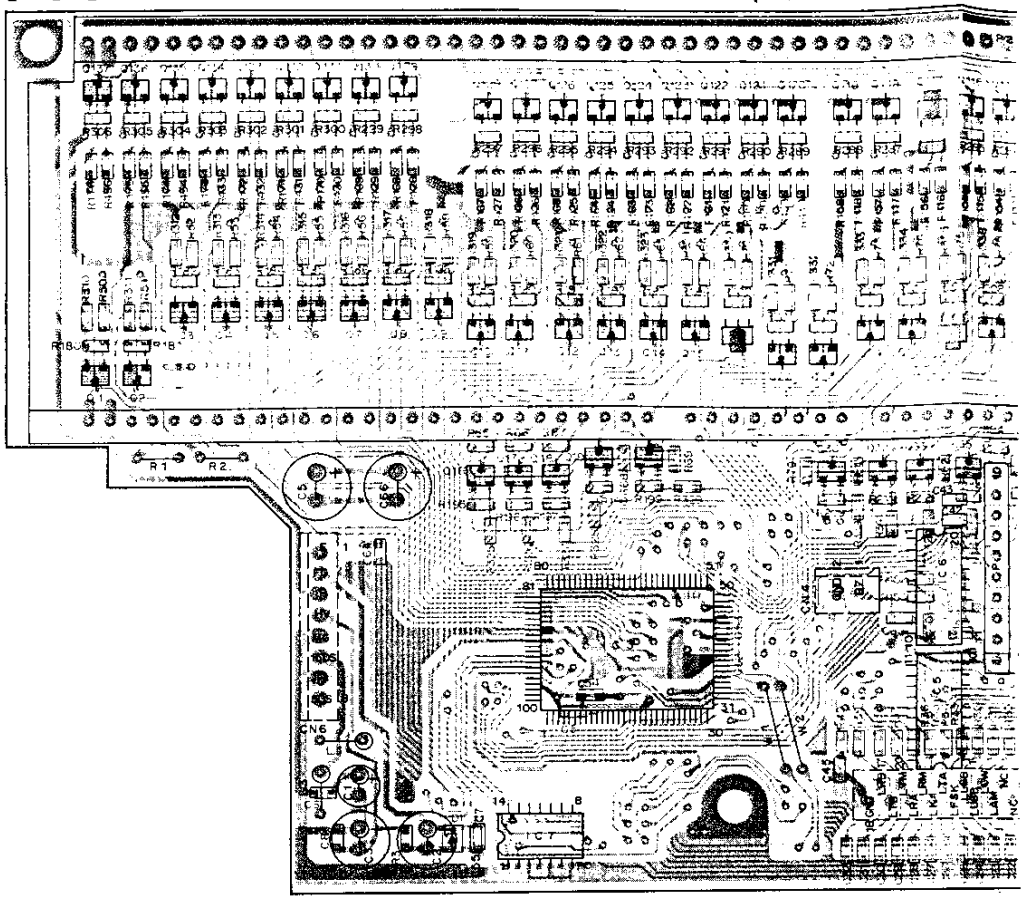

DISPLAY UNIT (X54-3080-01) Foil side view

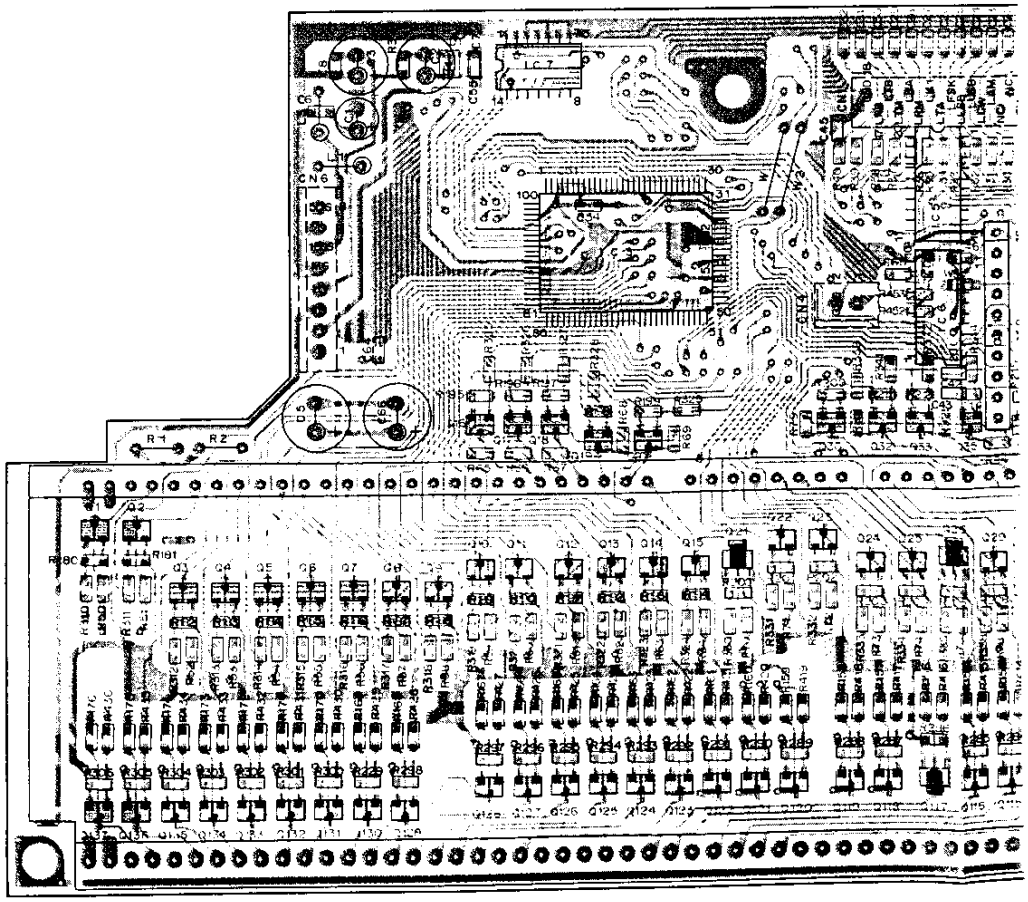

RD VIEWS

DISPLAY UNIT (X54-3080-01) Component side view

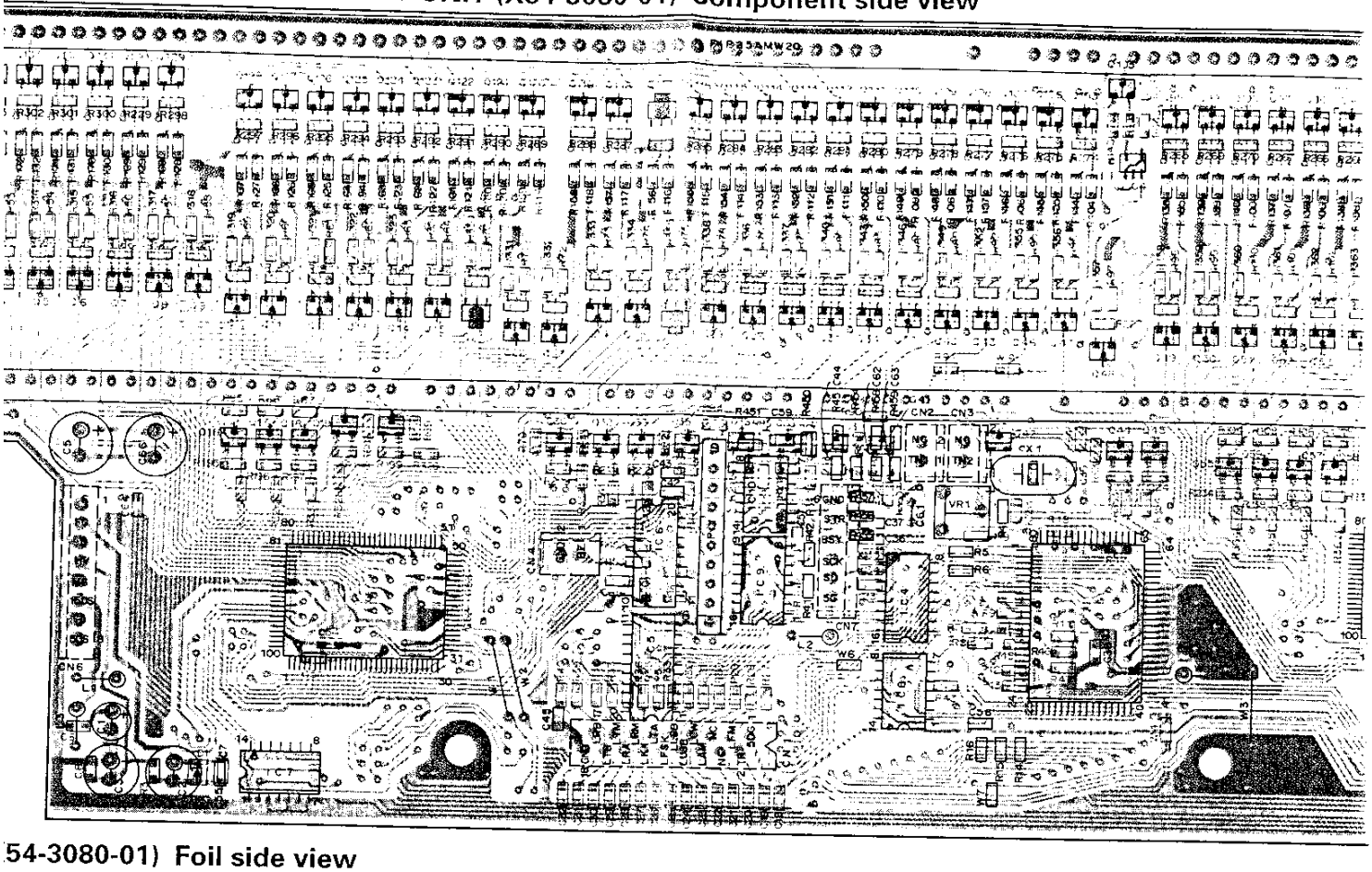

54-3080-01) Foil side view

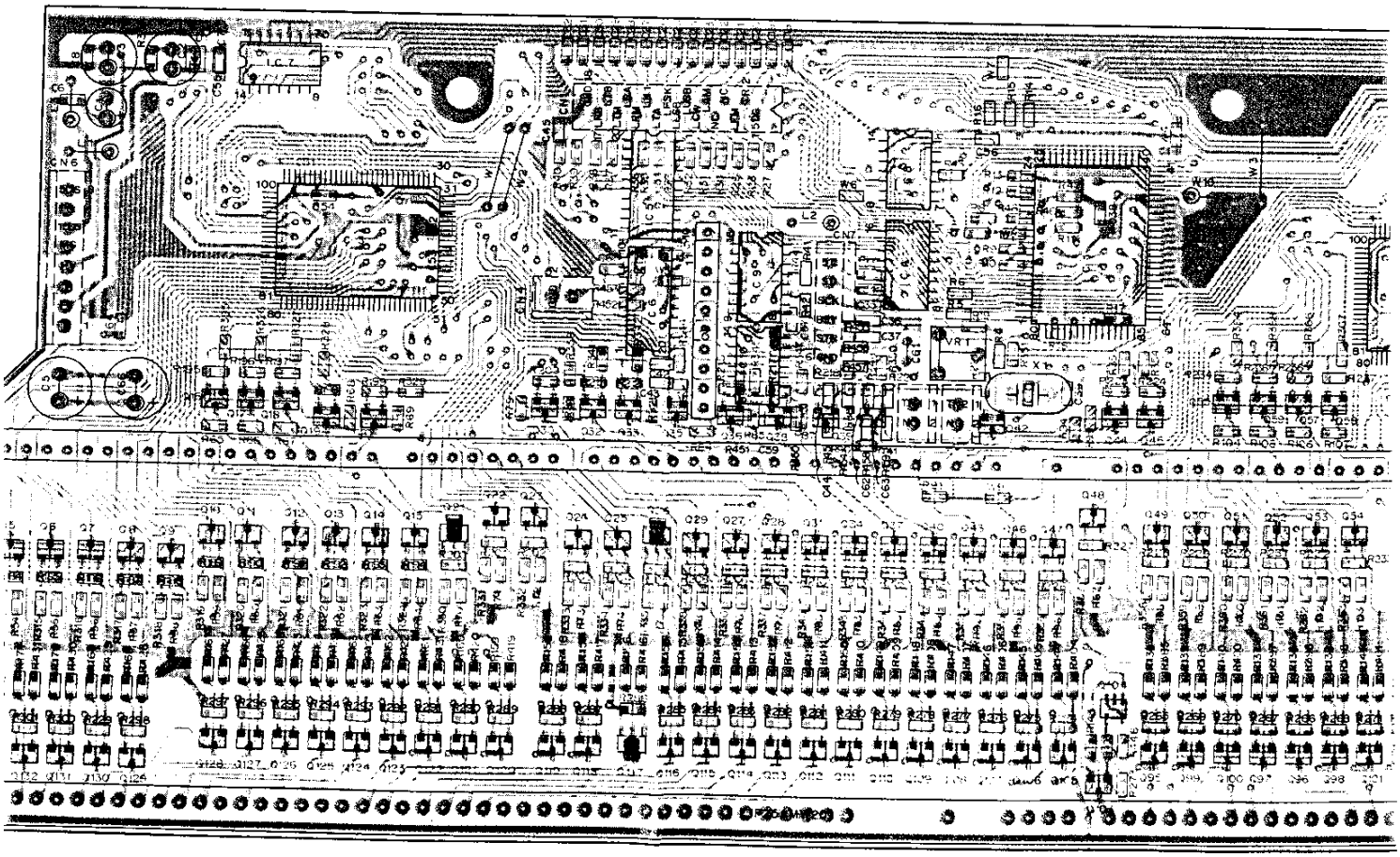

nponent side view

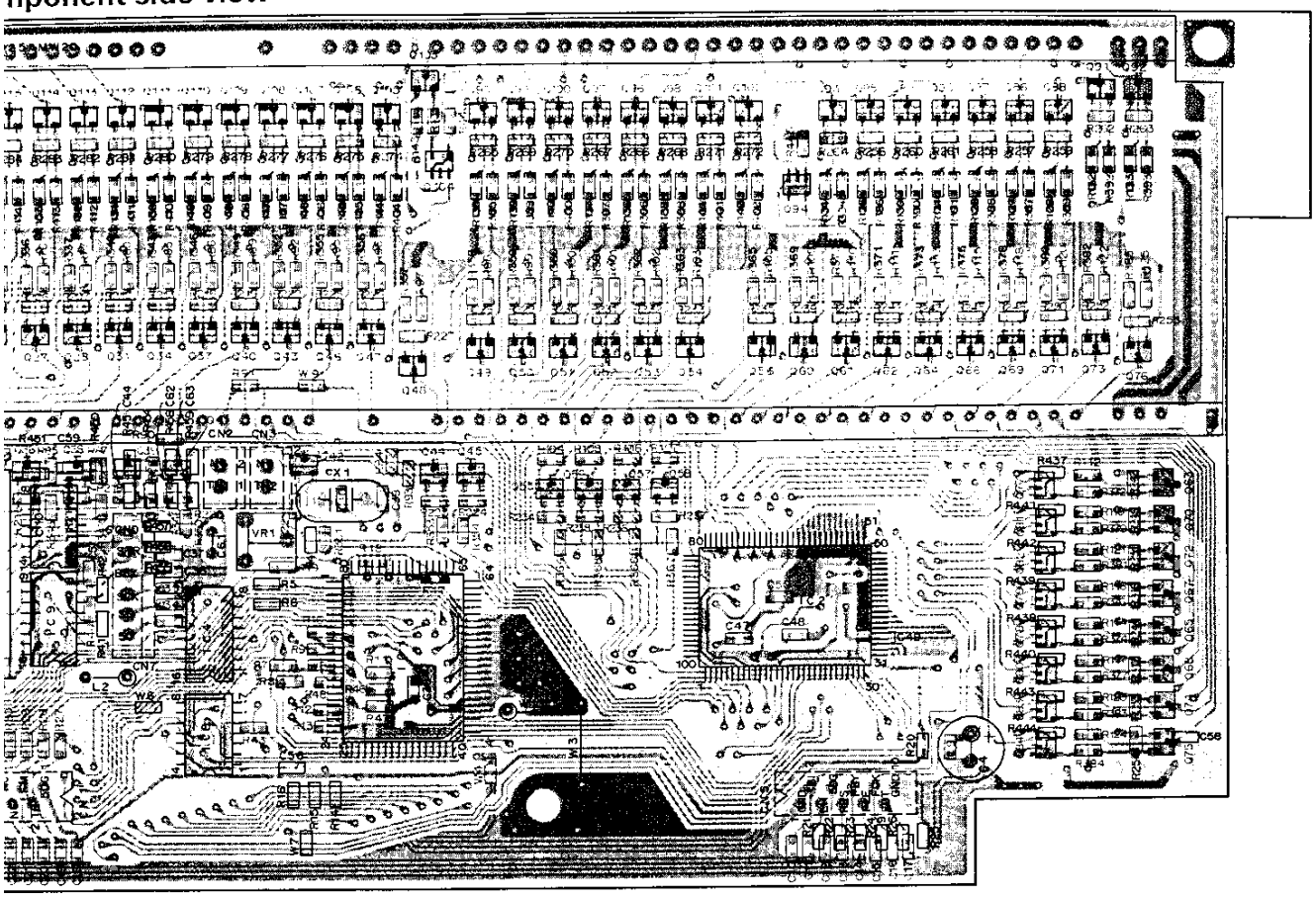

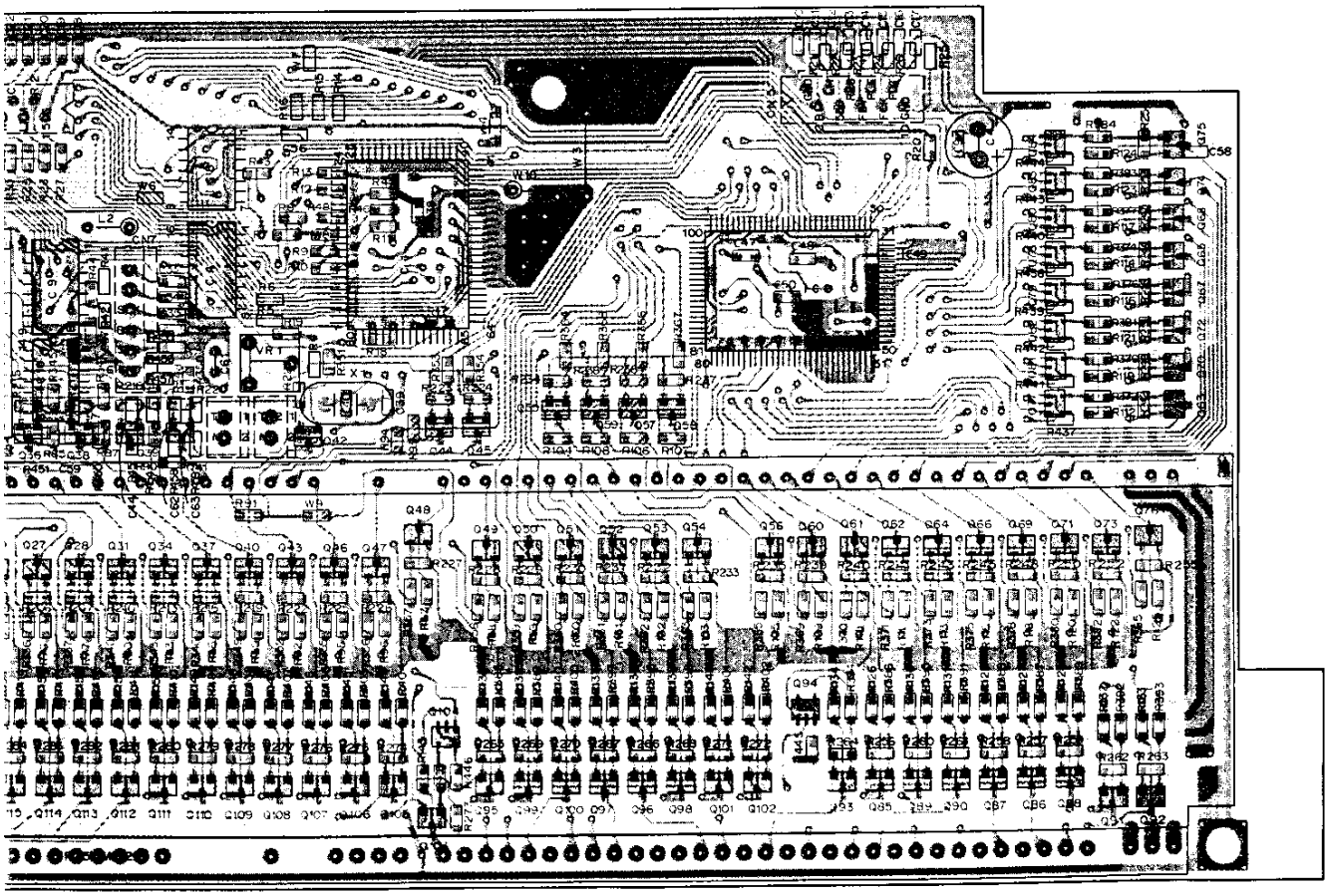

DISPLAY UNIT (X54-3080-01)

2SA1455K

2SA1201

FMG1

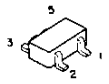

TC74HC00AF
TC74HC04AF
TC4011BF

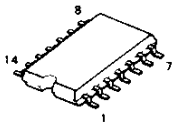

TC74HC138AF
TC74HC175AF
TC74HC574AF

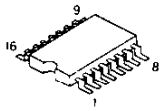

643180XA34F6

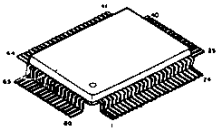

MB622180PF

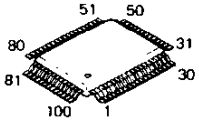

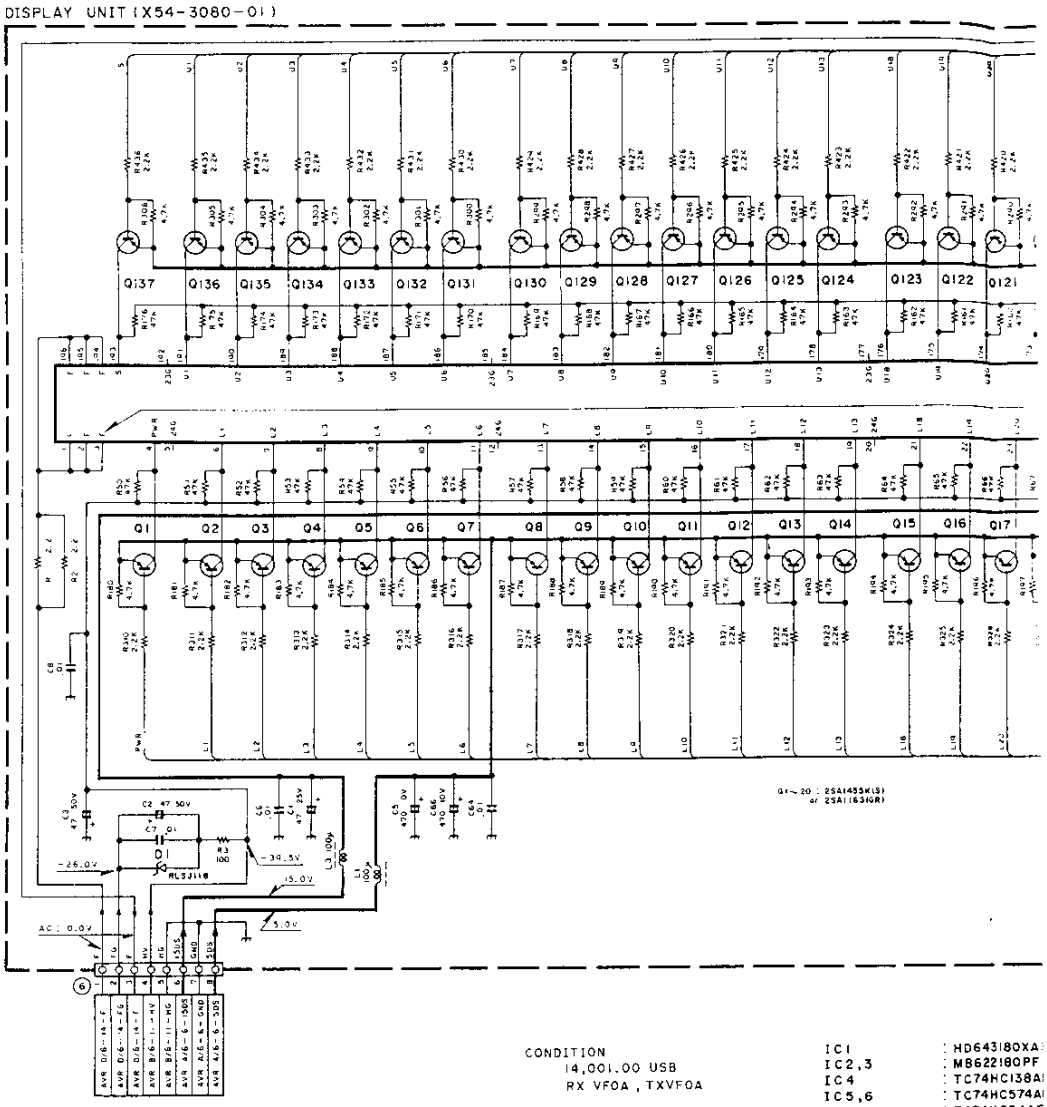

CONDITION
14,001.00 USB
RX VFOA , TXVFOA

IC1	: HD643180XA
IC2,3	: MB622180PF
IC4	: TC74HC138A
IC5,6	: TC74HC574A
IC7	: TC74HC04AF
IC8	: TC74HC00AF
IC9	: TC74HC175A
IC10	: TC4011BF
Q1~20,22~25,27~76,85~93, 118~137	: 2SA1455K(S)
Q21,26,117	: 2SA1201(O,Y
Q77~84,94,104	: FMG1
D1	: RLZJ118
CP1	: R90-0598-0
X1	: L77-1380-0
V1	: FIP25AMW20

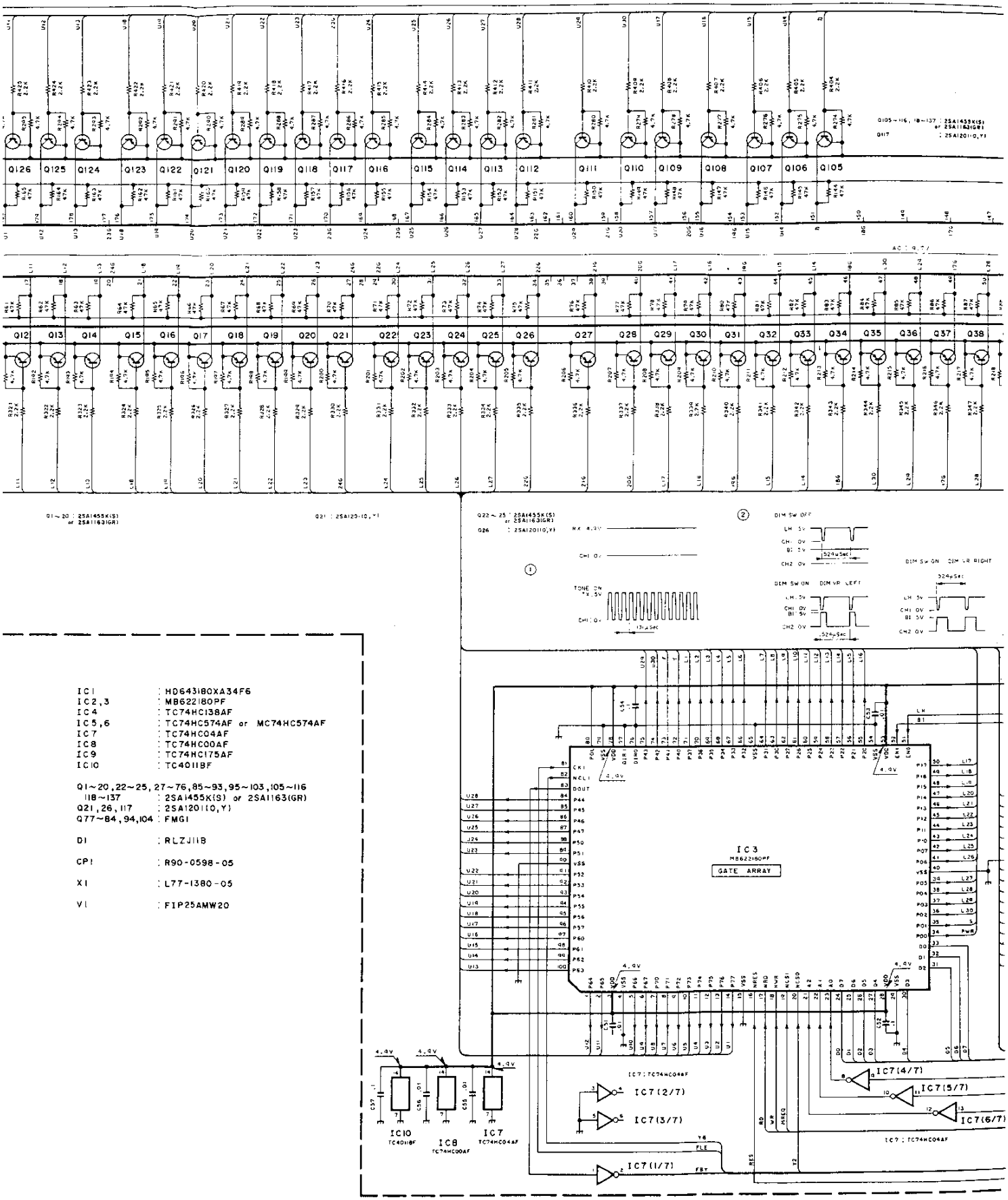

IC1	: HD643180XA34F6
IC2,3	: MB622180PF
IC4	: TC74HC138AF
IC5,6	: TC74HC574AF or MC74HC574AF
IC7	: TC74HC04AF
IC8	: TC74HC00AF
IC9	: TC74HC175AF
IC10	: TC4011BF
Q1~20,22~25,27~76,85~93,95~103,105~116 118~137	: 2SA1455K(S) or 2SA1163(GR)
Q21,26,117	: 2SA1201(O,Y)
Q77~84,94,104	: FMG1
D1	: RLZJ11B
CP1	: R90-0598-05
X1	: L77-1380-05
V1	: FIP25AMW20

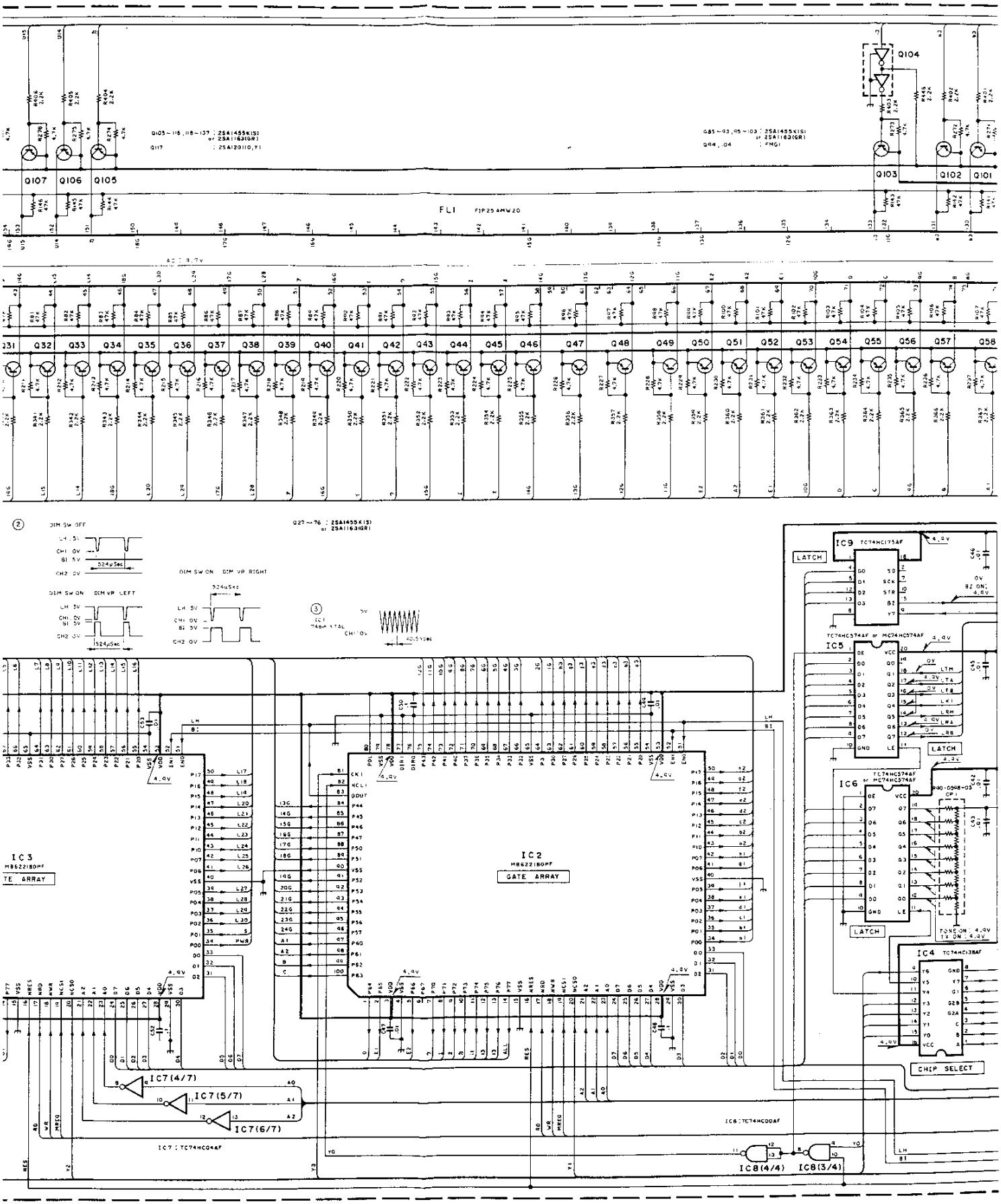
Q107 Q106 Q105
Q104
Q103 Q102 Q101
FL1
Q31 Q32 Q33 Q34 Q35 Q36 Q37 Q38 Q39 Q40 Q41 Q42 Q43 Q44 Q45 Q46 Q47 Q48 Q49 Q50 Q51 Q52 Q53 Q54 Q55 Q56 Q57 Q58
DIM SW OFF
DIM SW ON DIM VR RIGHT
DIM SW ON DIM VR LEFT
IC1 7.68M XTAL
IC9 TC74HC175AF
LATCH
IC5 TC74HC574AF or MC74HC574AF
IC6 TC74HC574AF or MC74HC574AF
IC4 TC74HC138AF
CHIP SELECT
IC3 M66221B0FF
GATE ARRAY
IC2 M66221B0FF
GATE ARRAY
IC7(4/7)
IC7(5/7)
IC7(6/7)
IC7 : TC74HC04AF
IC8 : TC74HC00AF
IC8(4/4)
IC8(3/4)

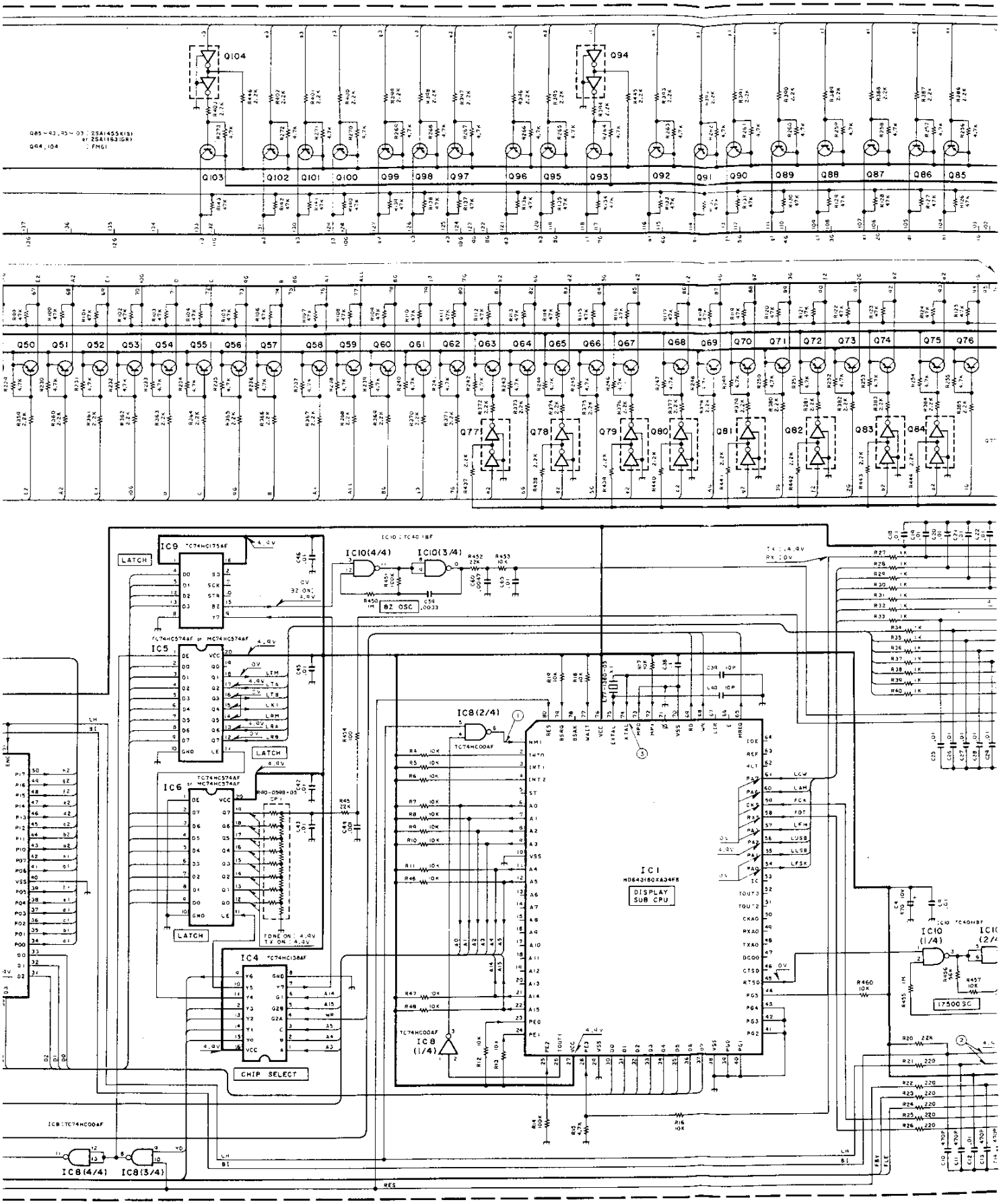
IC9 TC74HC175AF
LATCH
IC5 TC74HC574AF or MC74HC574AF
IC6 TC74HC574AF or MC74HC574AF
IC4 TC74HC138AF
CHIP SELECT
IC10(4/4)
IC10(3/4)
BZ OSC
IC8(2/4)
IC8 (1/4)
IC8(4/4)
IC8(3/4)
IC1
HD64180XA3AFS
DISPLAY SUB CPU
IC10 (1/4)
17500 SC

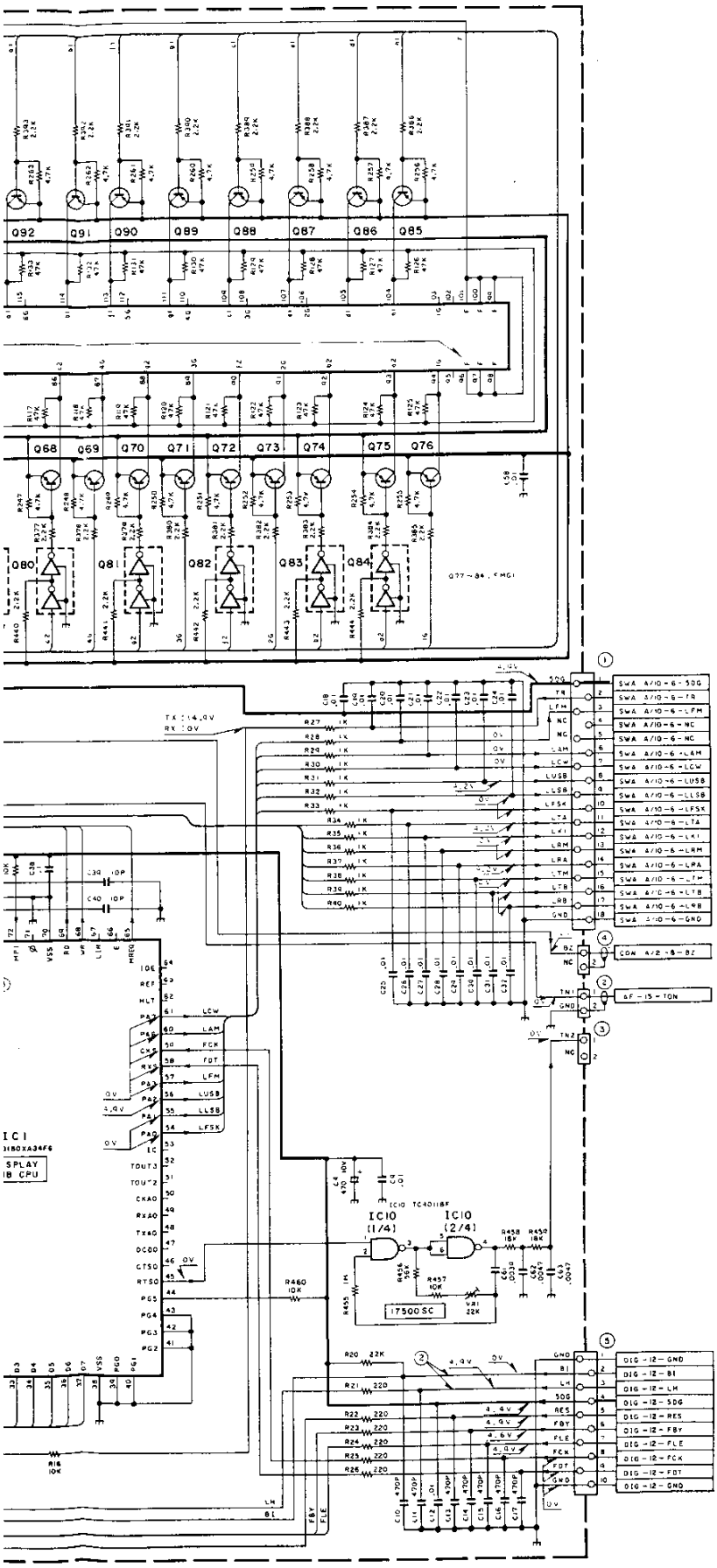
Q92 Q91 Q90 Q89 Q88 Q87 Q86 Q85
Q68 Q69 Q70 Q71 Q72 Q73 Q74 Q75 Q76
Q80 Q81 Q82 Q83 Q84
IC1
IC10 (1/4)
IC10 (2/4)
17500SC
SWA A/10-6-SDG
SWA A/10-6-TR
SWA A/10-6-LFM
SWA A/10-6-NC
SWA A/10-6-LAM
SWA A/10-6-LCW
SWA A/10-6-LUSB
SWA A/10-6-LLSB
SWA A/10-6-LFSK
SWA A/10-6-LTA
SWA A/10-6-LKI
SWA A/10-6-LRM
SWA A/10-6-LRA
SWA A/10-6-LTM
SWA A/10-6-LTB
SWA A/10-6-LRB
SWA A/10-6-GND
COW A/2-6-BZ
AF-15-TON
DIG-12-GND
DIG-12-BI
DIG-12-LH
DIG-12-SDG
DIG-12-RES
DIG-12-FBY
DIG-12-FLE
DIG-12-FCK
DIG-12-FDT
DIG-12-GND

TS-950SDX PC BOARD VIEWS/CIRCUIT DIAGRAM

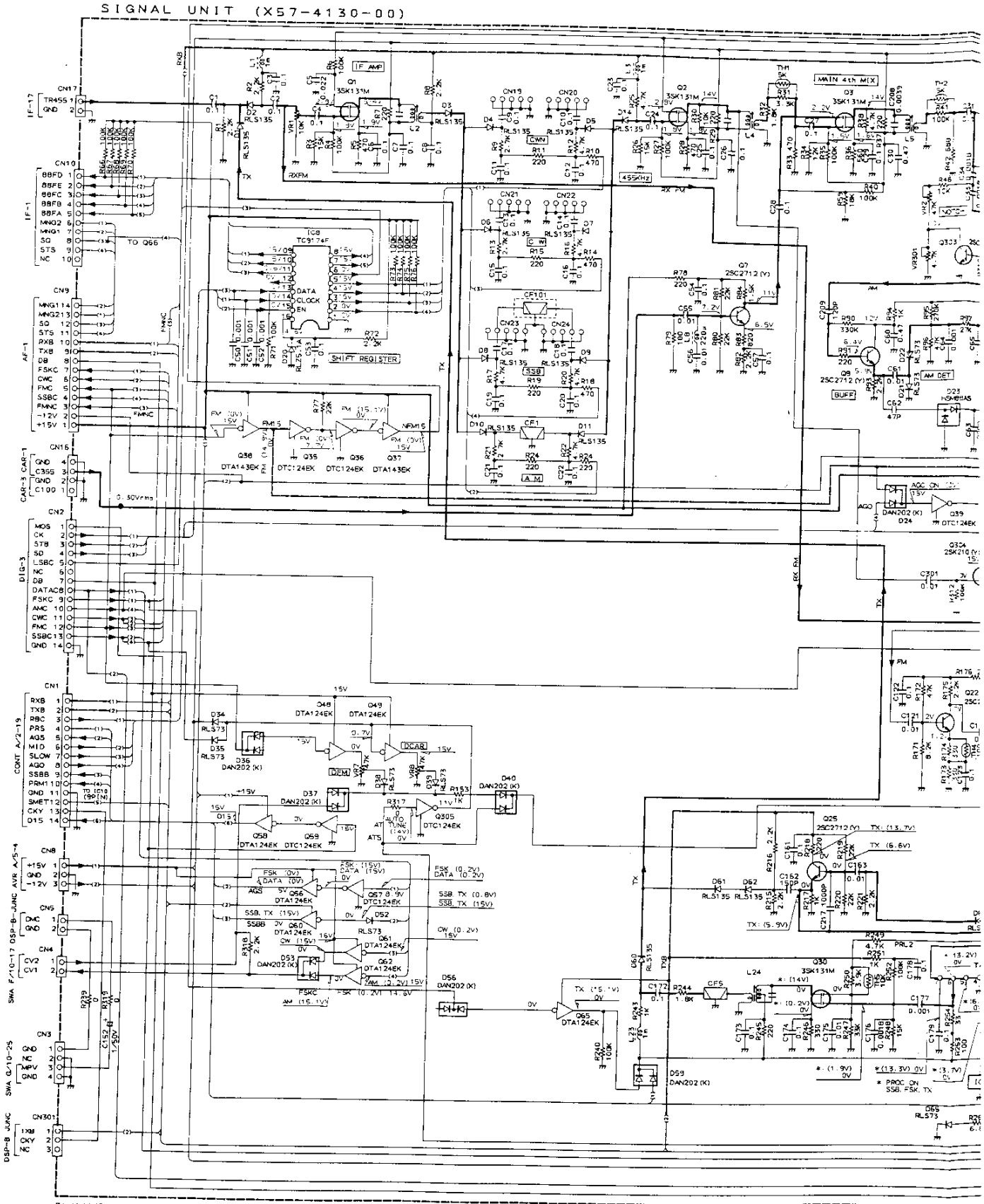

D1~11,14,45~48,60~62,64 : RLS135
D15 : 1SV149A
D16~19 : 1SS133
D20 : RLZ5.1A
D21,22,27~29,32,34,35,38, 39,43,44,52,65,68~70,74 : RLS73
D23,31,42,66,67 : HSM88AS
D24,36,37,40,53,56,59 : DAN202K
D49~51 : 1N60
D71 : RLZJ9.1C

TH1,2,7,8 : 112-502-2
TH4 : 112-101-2
TH5 : 112-103-2
TH6 : 112-302-2
TH9 : 157-203-5509

IC1,10 : TC4066BF
IC2 : NJM2903M
IC3 : μPC1158H2
IC5 : TA7302P
IC6,7 : μPC577H
IC8 : TC9174F

Q1~4,27,30 : 3SK131M
Q5,7,9,10,12,19,20,22,25, 28,29,33,34,303 : 2SC2712(Y)
Q11,304 : 2SK210(Y)
Q13 : 2SA1162(Y)

Q35,36,39,43,51,53,54,57, 59,66,67,305 : DTC124EK
Q37,38 : DTA143EK
Q41,42,48,49,52,55,56,58, 60~62,65 : DTA124EK
Q301 : DTA114EK
Q302 : DTC114EK

OARD VIEWS/CIRCUIT DIAGRAM

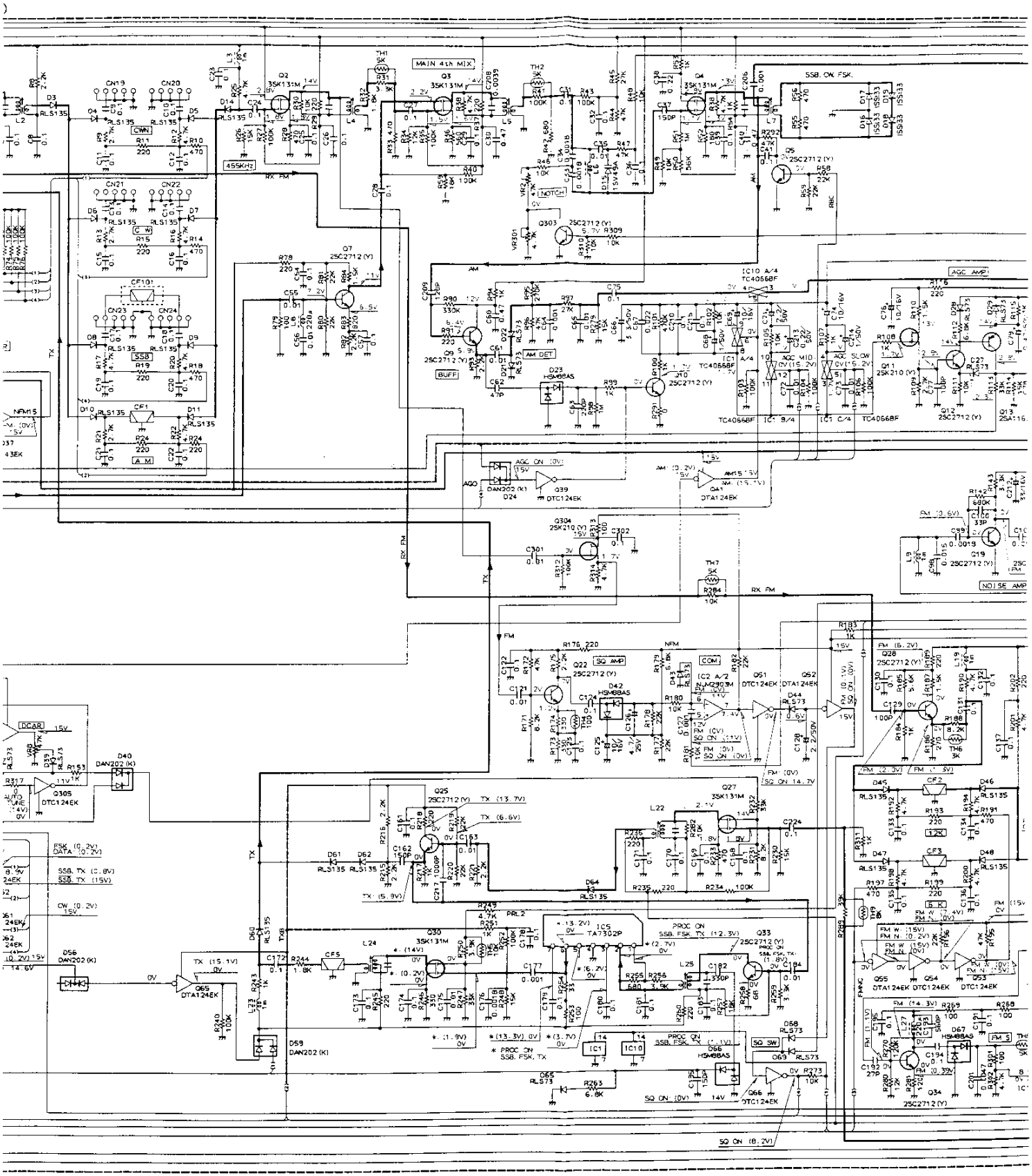

TH1,2,7,8	: 112-502-2	IC1,10	: TC4066BF	Q1~4,27,30	: 3SK131M	Q35,36,39,43,51,53,54,57, 59,66,67,305	: DTC124EK
TH4	: 112-101-2	IC2	: NJM2903M	Q5,7,9,10,12,19,20,22,25, 28,29,33,34,303	: 2SC2712(Y)	Q37,38	: DTA143EK
TH5	: 112-103-2	IC3	: μPC1158H2	Q11,304	: 2SK210(Y)	Q41,42,48,49,52,55,56,58, 60~62,65	: DTA124EK
TH6	: 112-302-2	IC5	: TA7302P	Q13	: 2SA1162(Y)	Q301	: DTA114EK
TH9	: 157-203-5509	IC6,7	: μPC577H			Q302	: DTC114EK
		IC8	: TC9174F				

SIGNAL UNIT (X57-4130-00)

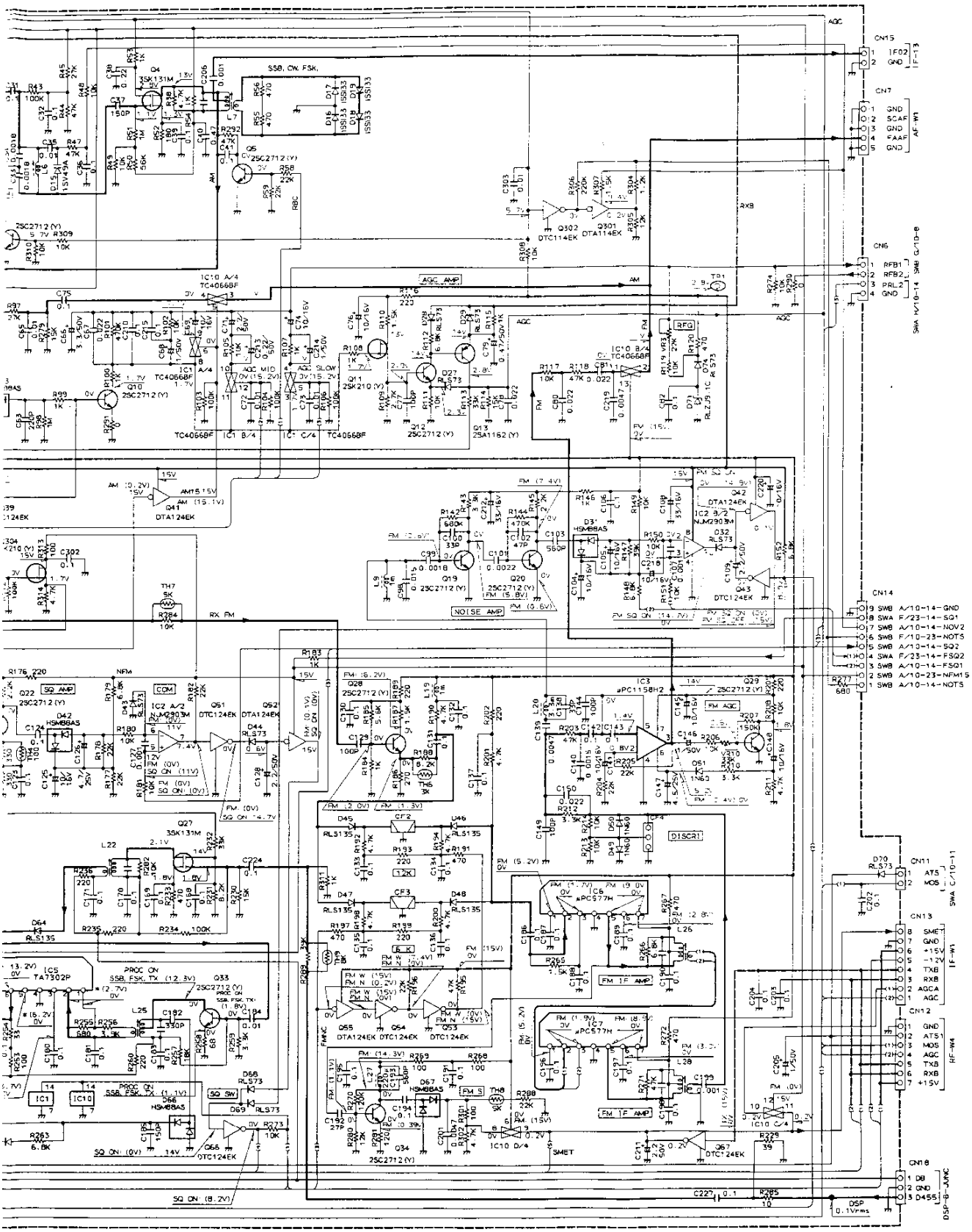

)0)

SIGNAL UNIT (X57-4130-00) Component side view

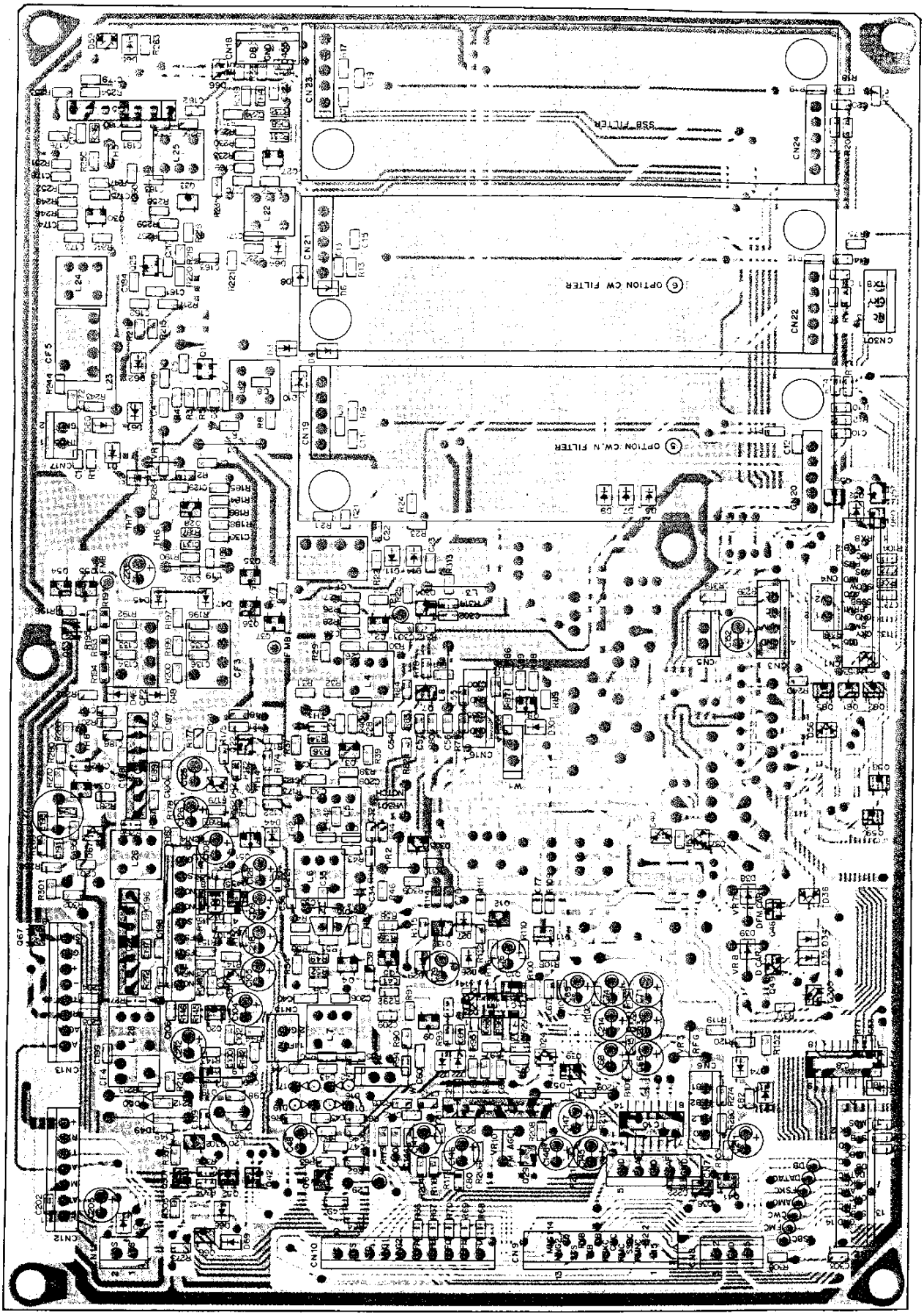

SIGNAL UNIT (X57-4130-00) Foil side view

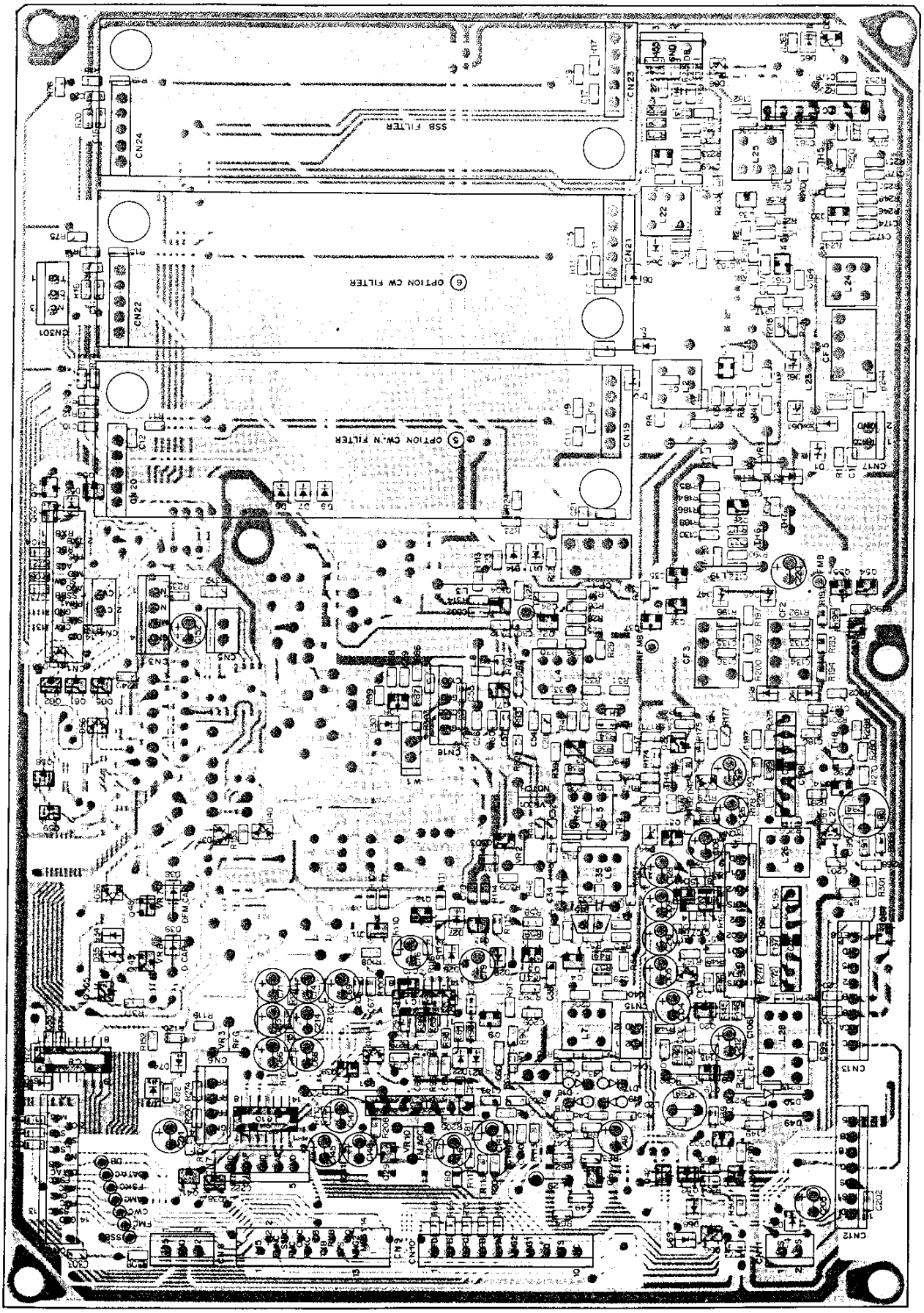

SWITCH UNIT (A) (X41-3240-00) Component side view

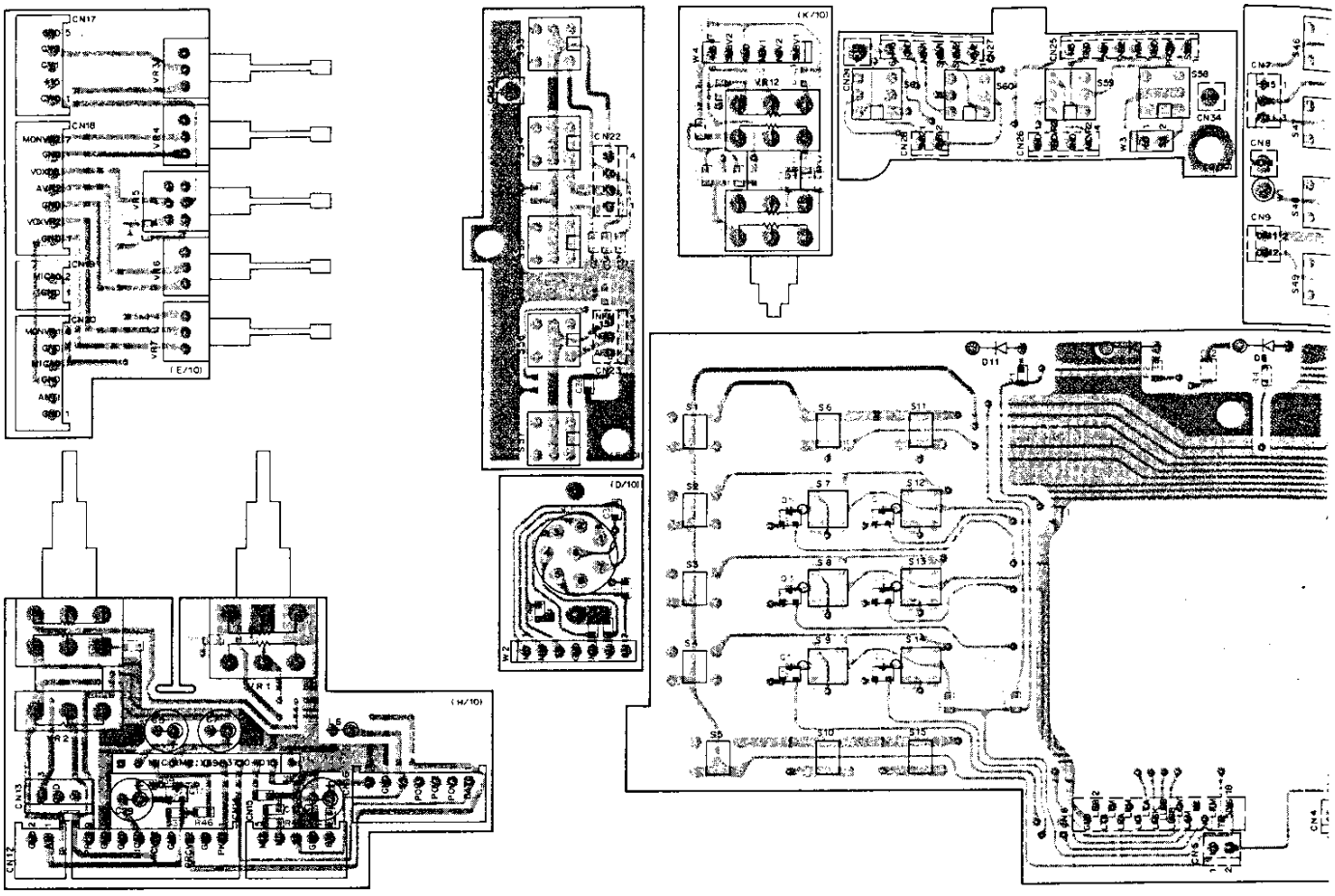

2SA1162
2SC2712
2SC3324
2SD1757K
DTA114EK
DTA124EK
DTC114EK
DTC124EK
DTA143EK
DTC143EK

2SK210

3SK131

TA7302P
µPC1158H2

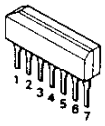

SWITCH UNIT (A) (X41-3240-00) Foil

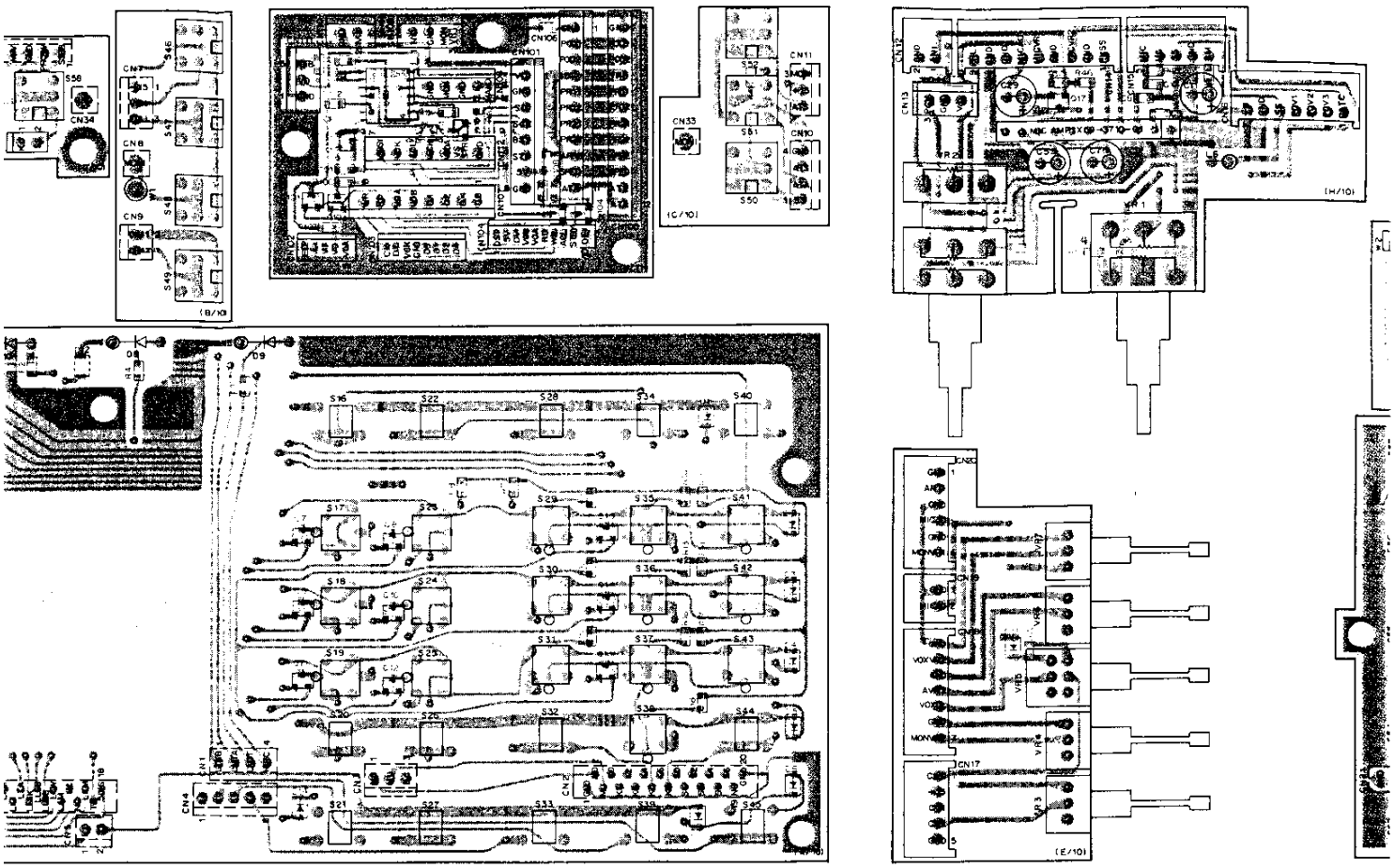

A7302P
PC1158H2

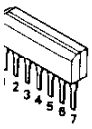

µPC577H

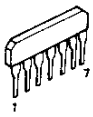

TC4066BF

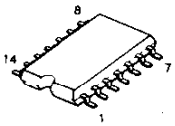

TC9174F

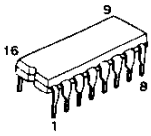

(A) (X41-3240-00) Foil side view

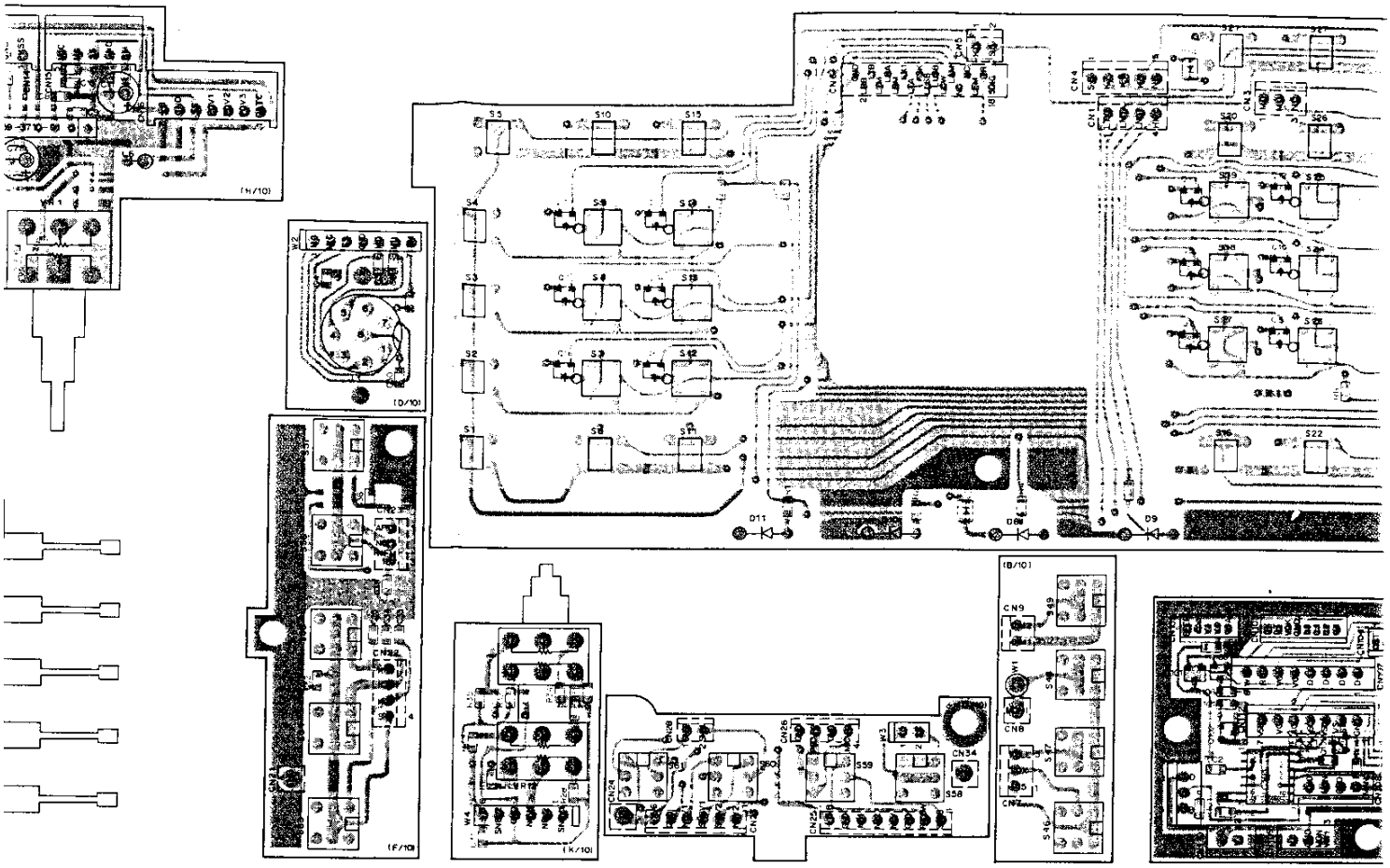

SWITCH UNIT (B) (X41-3250-00)

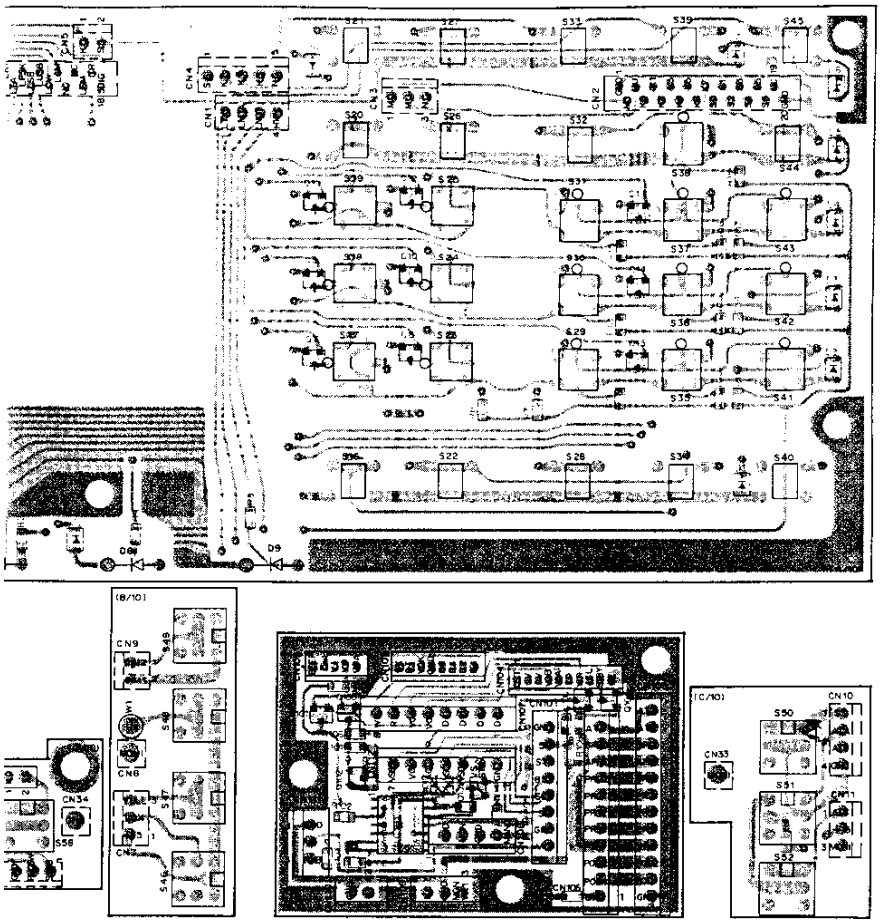

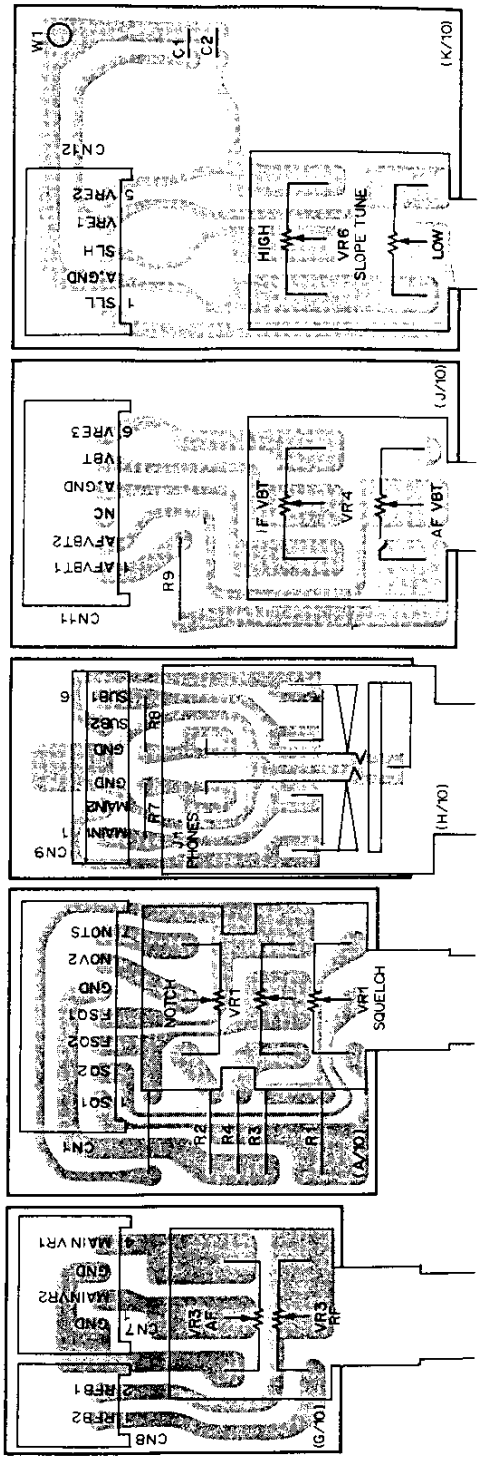

PC BOARD VIEWS TS-950SDX

SWITCH UNIT (B) (X41-3250-00) Component side view

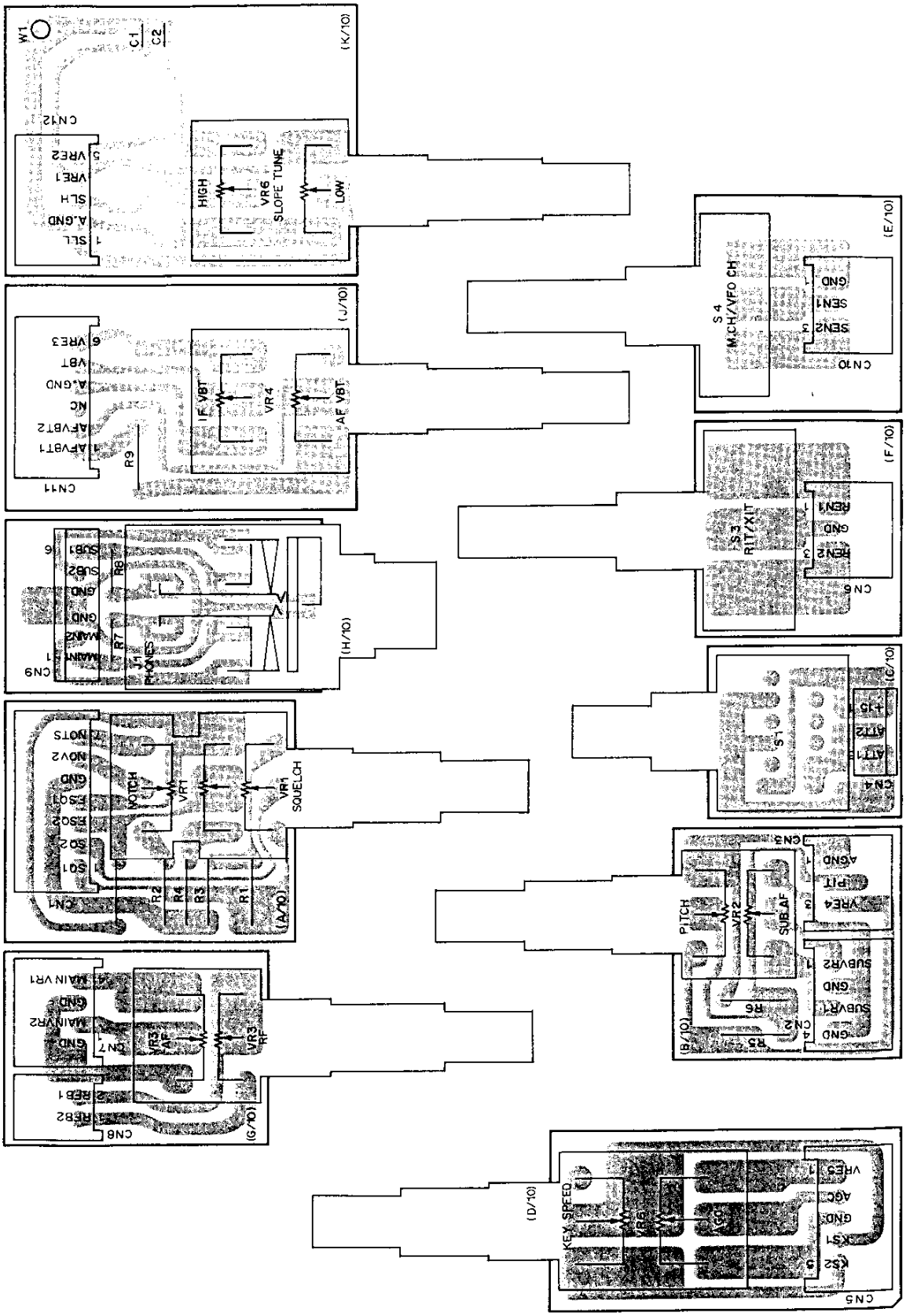

TS-950SDX SCHEMATIC DIAGRAM

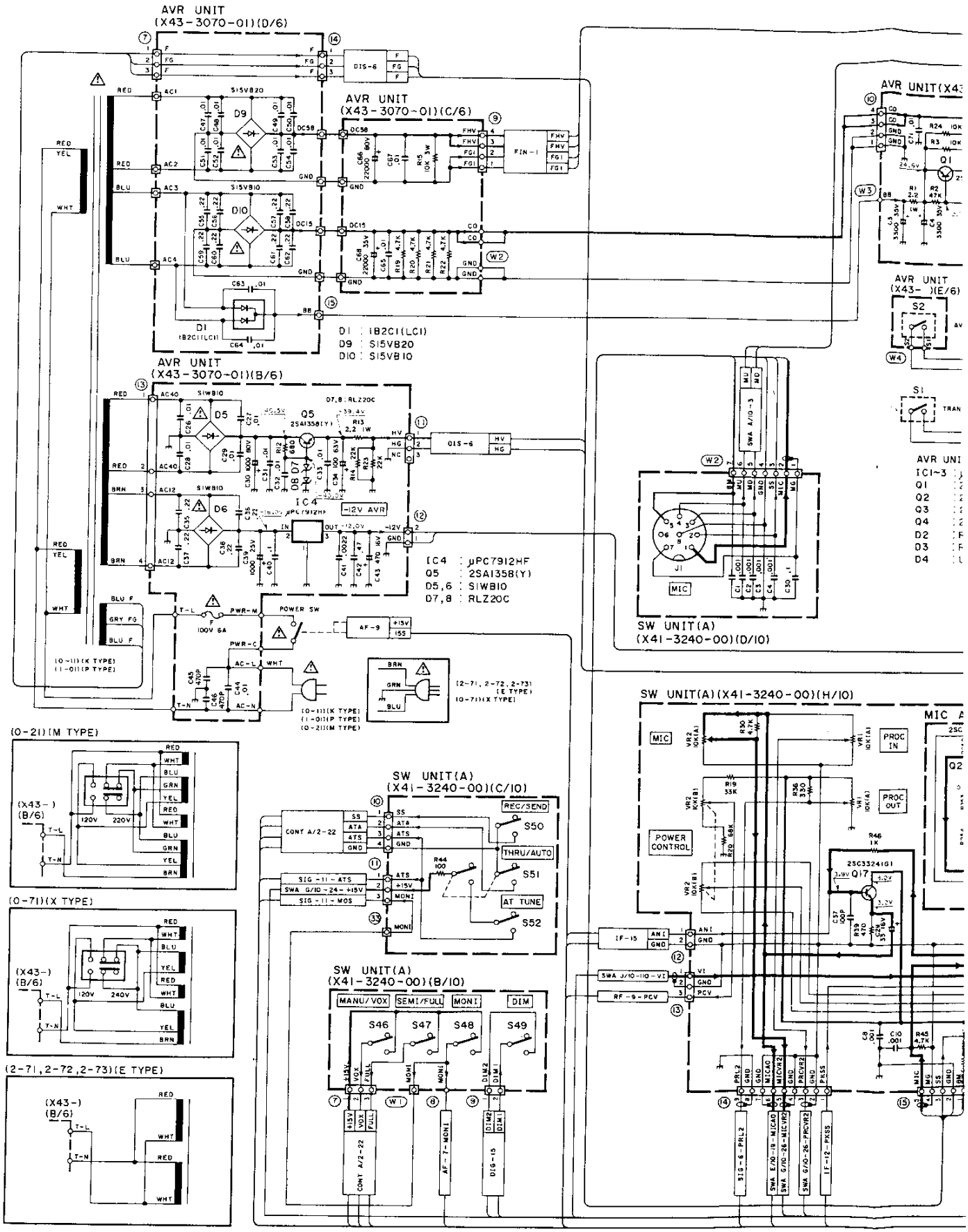

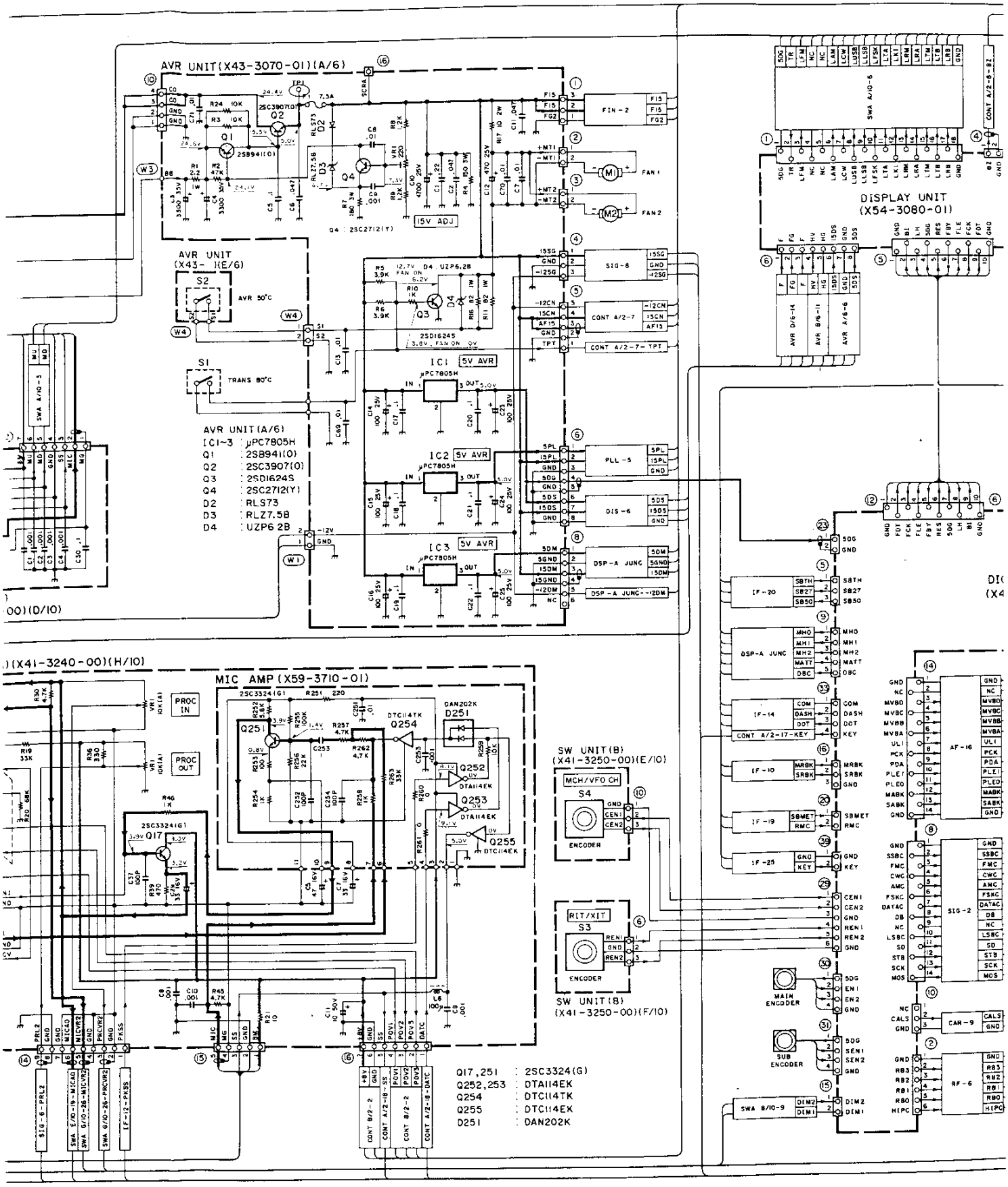
AVR UNIT(X43-3070-01)(A/6)
AVR UNIT (X43-)(E/6)
AVR UNIT(A/6)
IC1~3 : μPC7805H
Q1 : 2SB941(O)
Q2 : 2SC3907(O)
Q3 : 2SD1624S
Q4 : 2SC2712(Y)
D2 : RLS73
D3 : RLZ7.5B
D4 : UZP6 2B
DISPLAY UNIT (X54-3080-01)
MIC AMP (X59-3710-01)
SW UNIT(B) (X41-3250-00)(E/10)
SW UNIT(B) (X41-3250-00)(F/10)
Q17,251 : 2SC3324(G)
Q252,253 : DTA114EK
Q254 : DTC114TK
Q255 : DTC114EK
D251 : DAN202K

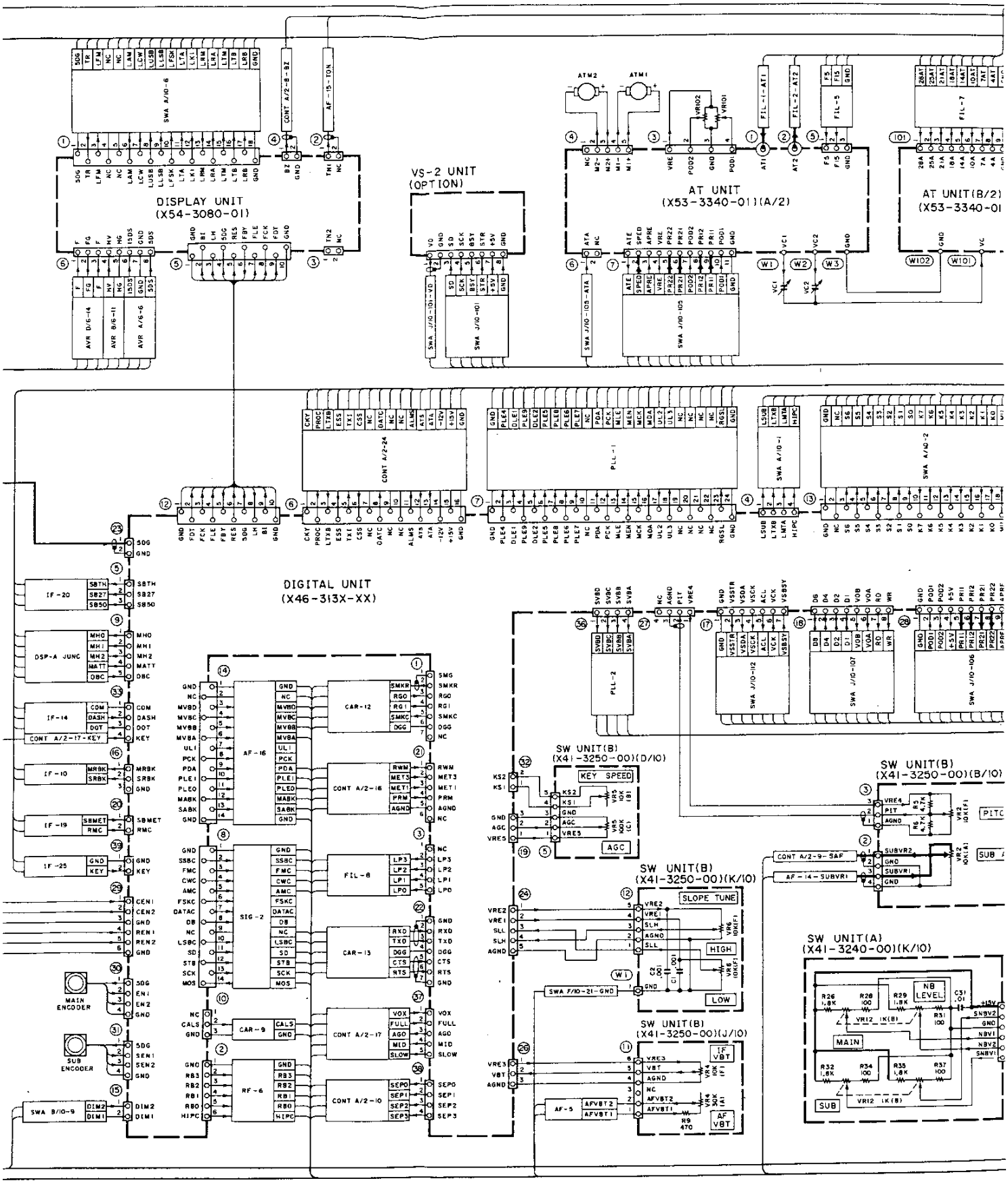
DISPLAY UNIT
(X54-3080-01)
VS-2 UNIT
(OPTION)
AT UNIT
(X53-3340-01)(A/2)
AT UNIT(B/2)
(X53-3340-01
DIGITAL UNIT
(X46-313X-XX)
SW UNIT(B)
(X41-3250-00)(D/10)
SW UNIT(B)
(X41-3250-00)(B/10)
SW UNIT(B)
(X41-3250-00)(K/10)
SW UNIT(A)
(X41-3240-00)(K/10)
SW UNIT(B)
(X41-3250-00)(J/10)
KEY SPEED
SLOPE TUNE
HIGH
LOW
AGC
NB LEVEL
MAIN
SUB
MAIN ENCODER
SUB ENCODER

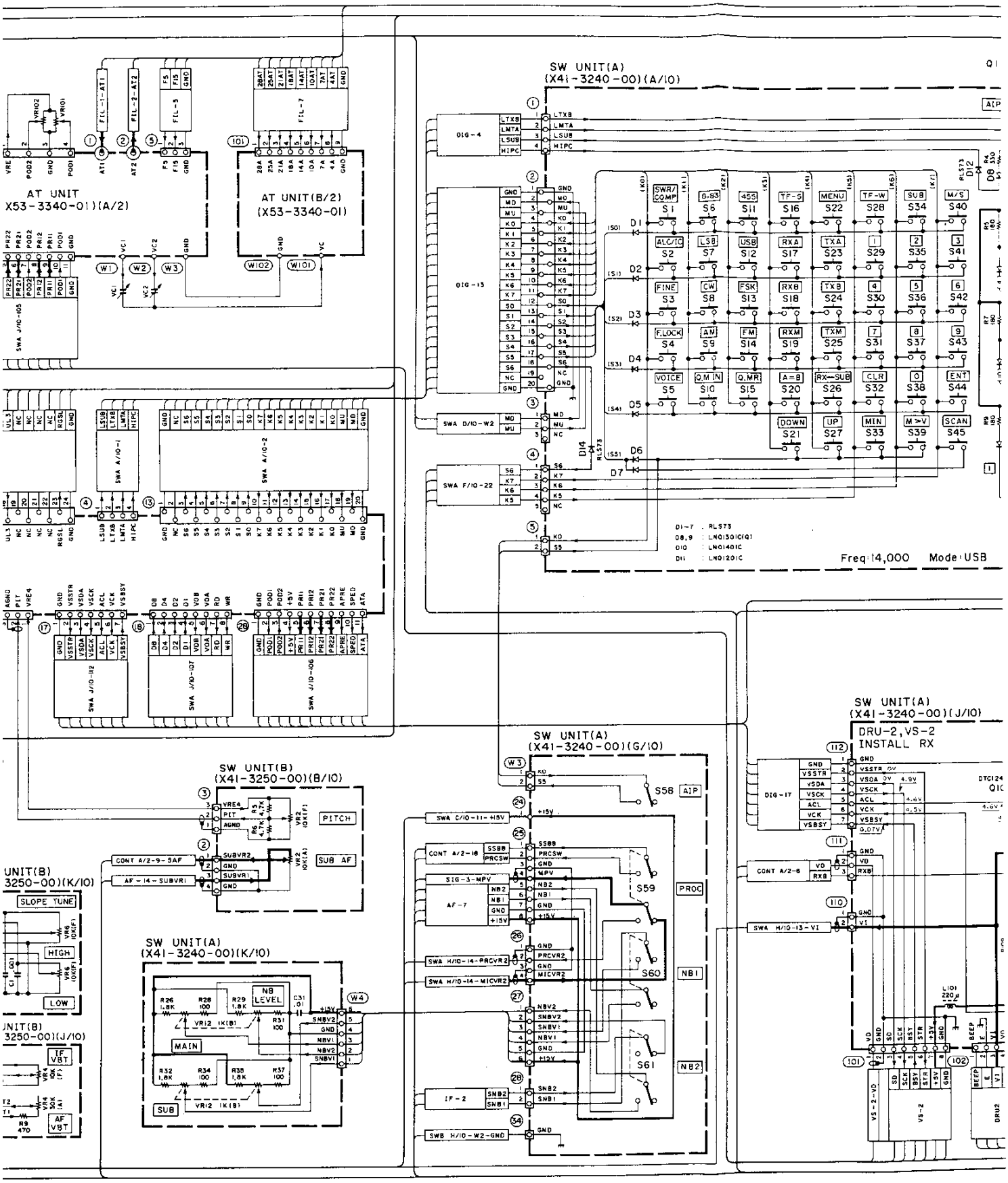
SW UNIT(A)
(X41-3240-00)(A/10)
AT UNIT
X53-3340-01)(A/2)
AT UNIT(B/2)
(X53-3340-01)
SW UNIT(B)
(X41-3250-00)(B/10)
SW UNIT(A)
(X41-3240-00)(G/10)
SW UNIT(A)
(X41-3240-00)(J/10)
DRU-2,VS-2
INSTALL RX
SW UNIT(A)
(X41-3240-00)(K/10)
Freq:14,000 Mode:USB
PITCH
SUB AF
SLOPE TUNE
HIGH
LOW
PROC
NB1
NB2
NB LEVEL
MAIN
SUB

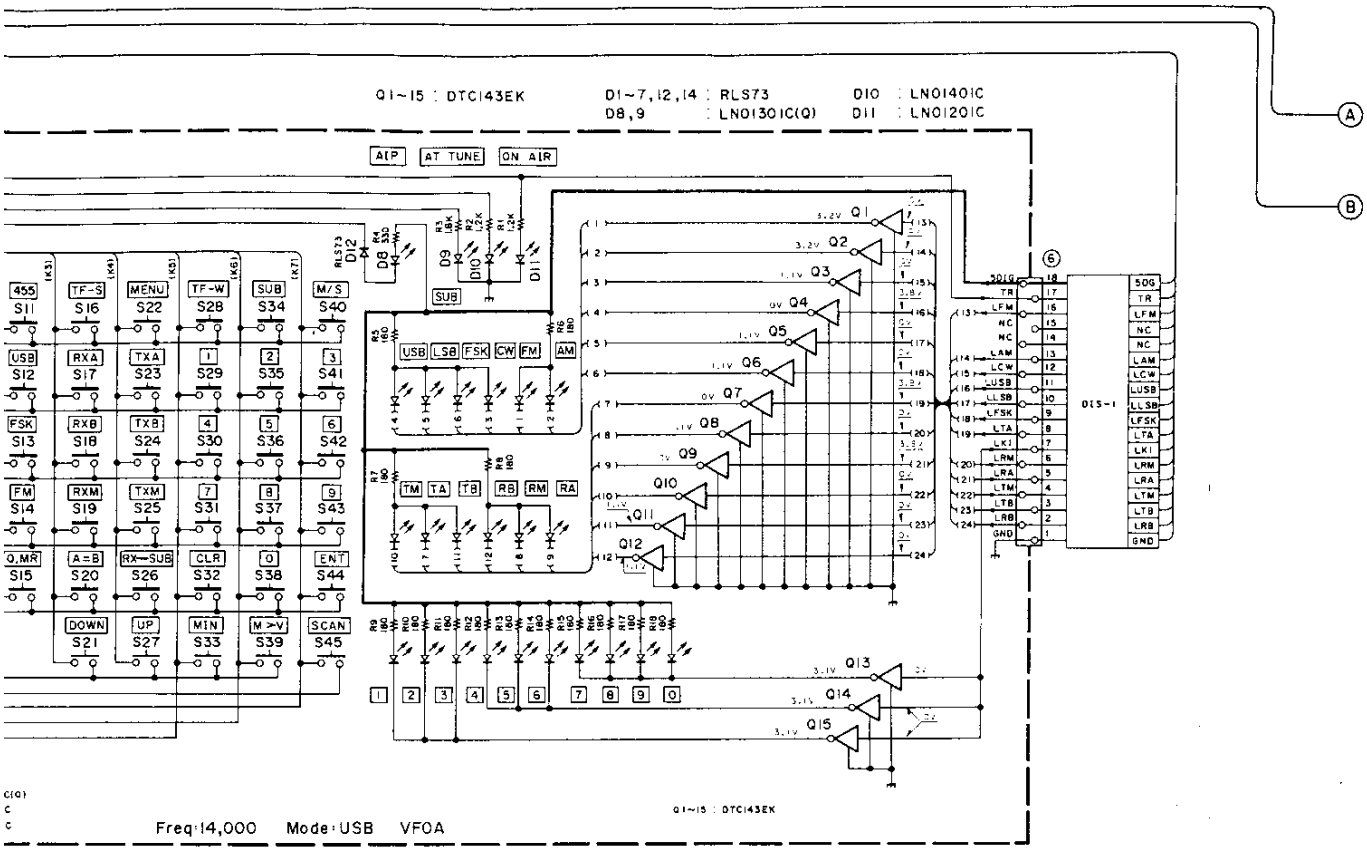
Q1~15 : DTC143EK
D1~7,12,14 : RLS73
D8,9 : LN01301C(Q)
D10 : LN01401C
D11 : LN01201C
AIP
AT TUNE
ON AIR
Freq:14,000 Mode:USB VFOA
Q1~15 : DTC143EK

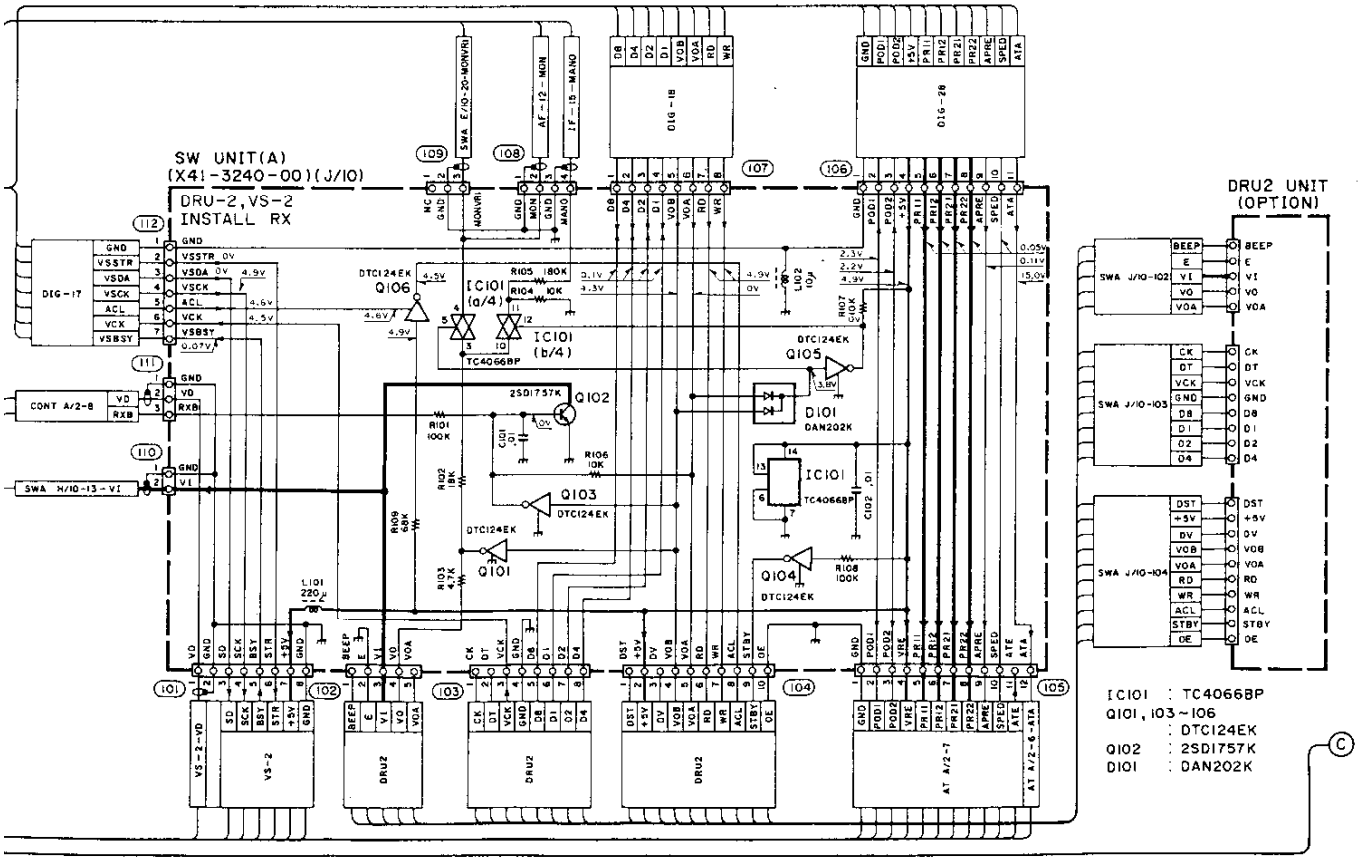
SW UNIT(A)
(X41-3240-00)(J/10)
DRU-2,VS-2
INSTALL RX
DRU2 UNIT
(OPTION)
IC101 : TC4066BP
Q101,103~106 : DTC124EK
Q102 : 2SD1757K
D101 : DAN202K

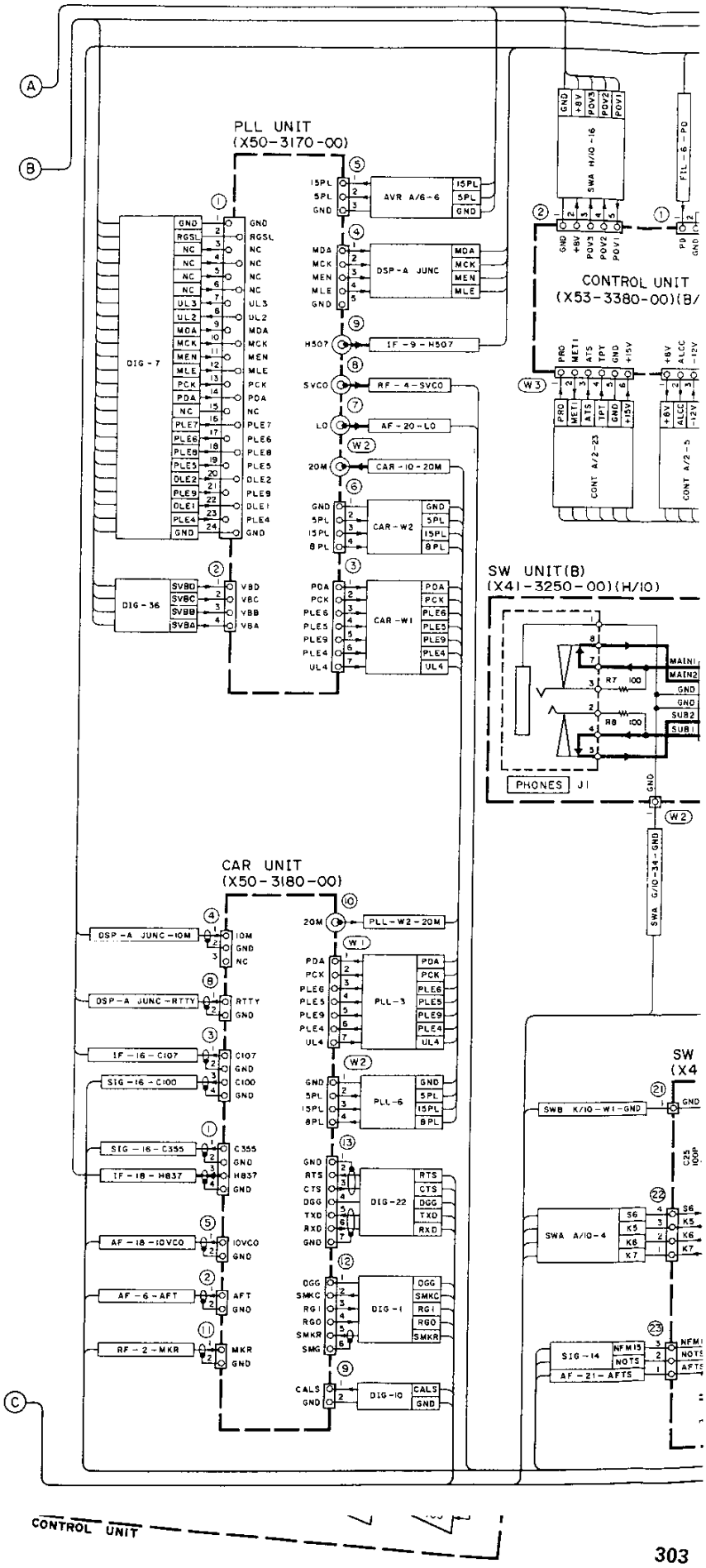
PLL UNIT
(X50-3170-00)
CAR UNIT
(X50-3180-00)
CONTROL UNIT
(X53-3380-00)(B/
SW UNIT(B)
(X41-3250-00)(H/10)
DIG-7
DIG-36
AVR A/6-6
DSP-A JUNC
IF-9-H507
RF-4-SVCO
AF-20-LO
CAR-10-20M
CAR-W2
CAR-W1
PLL-W2-20M
PLL-3
PLL-6
DIG-22
DIG-1
DIG-10
SWA H/10-16
FIL-6-PD
CONT A/2-23
CONT A/2-5
PHONES J1
SWA G/10-34-GND
SWB K/10-W1-GND
SWA A/10-4
SIG-14
AF-21-AFTS
DSP-A JUNC-10M
DSP-A JUNC-RTTY
IF-16-C107
SIG-16-C100
SIG-16-C355
IF-18-H837
AF-18-10VCO
AF-6-AFT
RF-2-MKR

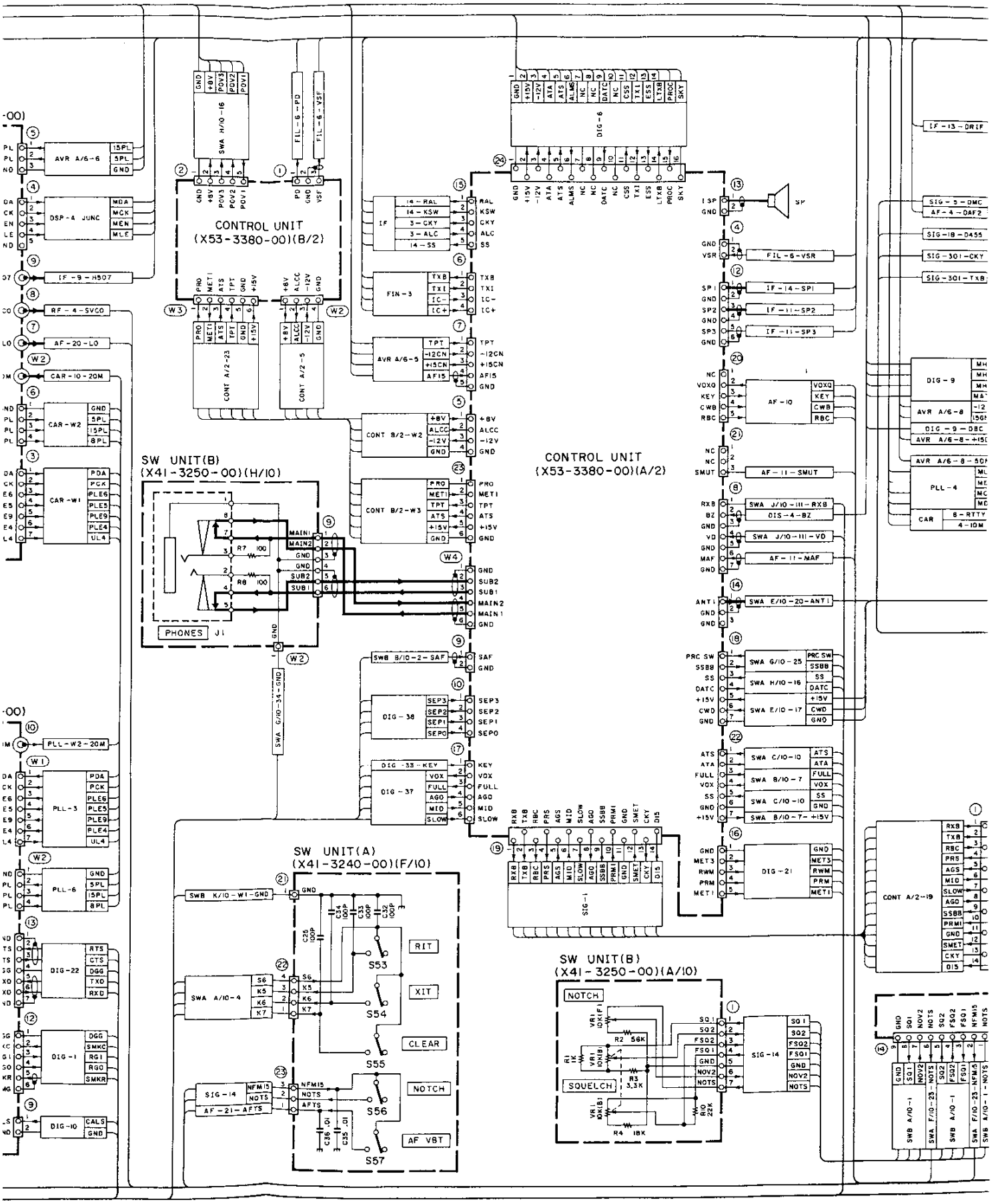
CONTROL UNIT
(X53-3380-00)(B/2)
CONTROL UNIT
(X53-3380-00)(A/2)
SW UNIT(B)
(X41-3250-00)(H/10)
SW UNIT(A)
(X41-3240-00)(F/10)
SW UNIT(B)
(X41-3250-00)(A/10)
PHONES J1
NOTCH
SQUELCH
RIT
XIT
CLEAR
NOTCH
AF VBT
S53
S54
S55
S56
S57

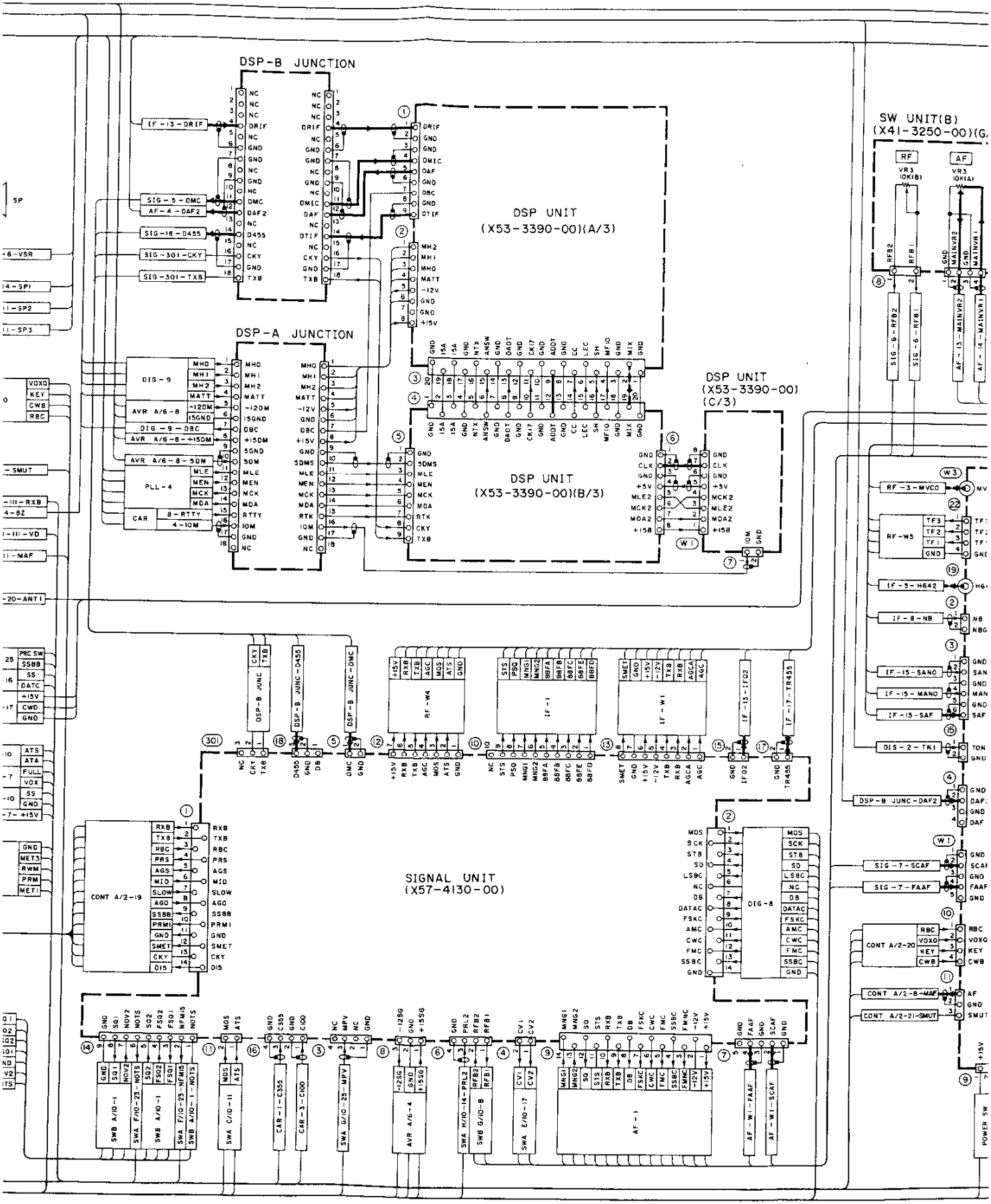
J
K
L
M
DSP-B JUNCTION
DSP-A JUNCTION
DSP UNIT
(X53-3390-00)(A/3)
DSP UNIT
(X53-3390-00)(B/3)
DSP UNIT
(X53-3390-00)
(C/3)
SW UNIT(B)
(X41-3250-00)(G/
SIGNAL UNIT
(X57-4130-00)
CONT A/2-19
DIG-8
DIG-9
AVR A/6-8
PLL-4
CAR
RF-W4
IF-1
IF-W1
RF-3-MVCO
RF-W5
IF-5-H642
IF-8-NB
IF-15-SANO
IF-15-MANO
IF-15-SAF
DIS-2-TN1
DSP-B JUNC-DAF2
SIG-7-SCAF
SIG-7-FAAF
CONT A/2-20
CONT A/2-8-MAF
CONT A/2-21-SMUT
SWB A/IO-1
SWA F/IO-23-NOTS
SWA F/IO-23-NFMIS
SWA C/IO-11
CAR-1-C355
CAR-3-C100
SWA G/IO-25-MPV
AVR A/6-4
SWA H/IO-14-PRL2
SWB G/IO-8
SWA E/IO-17
AF-1
AF-W1-FAAF
AF-W1-SCAF
POWER SW

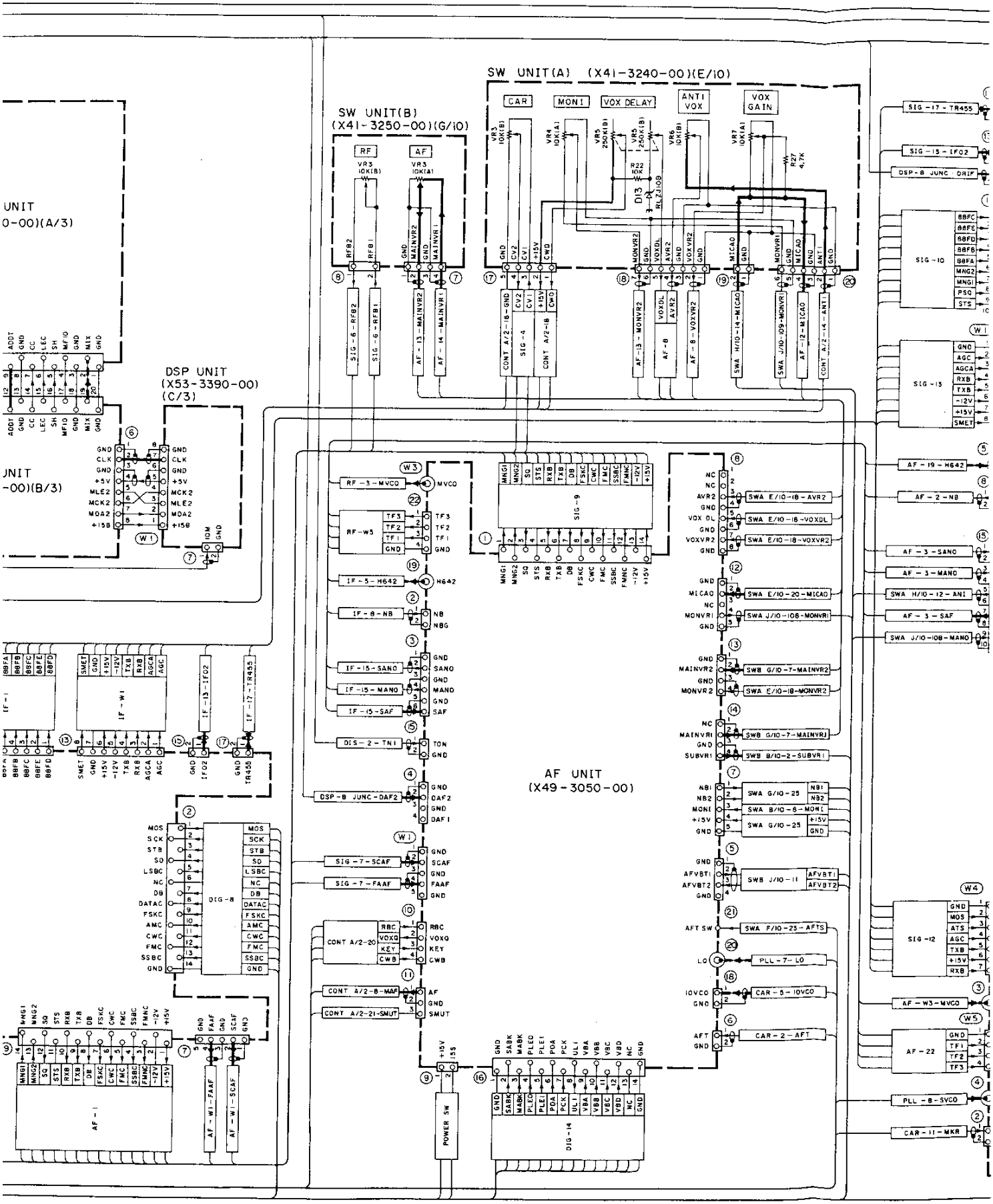
SW UNIT(A) (X41-3240-00)(E/10)
CAR
MONI
VOX DELAY
ANTI VOX
VOX GAIN
SW UNIT(B) (X41-3250-00)(G/10)
RF
AF
DSP UNIT (X53-3390-00) (C/3)
AF UNIT (X49-3050-00)
POWER SW
DIG-8
DIG-14
AF-1
IF-1
IF-W1
SIG-9
SIG-4
SIG-10
SIG-12
SIG-13
SIG-17-TR455
SIG-15-IFO2
DSP-8 JUNC DRIF
AF-19-H642
AF-2-NB
AF-3-SANO
AF-3-MANO
SWA H/10-12-ANI
AF-3-SAF
SWA J/10-108-MANO
AF-W3-MVCO
AF-22
PLL-8-SVCO
CAR-11-MKR
SWA E/10-18-AVR2
SWA E/10-18-VOXDL
SWA E/10-18-VOXVR2
SWA E/10-20-MICAO
SWA J/10-108-MONVR1
SWB G/10-7-MAINVR2
SWA E/10-18-MONVR2
SWB G/10-7-MAINVR1
SWB B/10-2-SUBVR1
SWA G/10-25
SWA B/10-6-MONL
SWB J/10-11
SWA F/10-23-AFTS
PLL-7-LO
CAR-5-IOVCO
CAR-2-AFT
RF-3-MVCO
RF-W5
IF-5-H642
IF-8-NB
IF-15-SANO
IF-15-MANO
IF-15-SAF
DIS-2-TNI
DSP-8 JUNC-DAF2
SIG-7-SCAF
SIG-7-FAAF
CONT A/2-20
CONT A/2-8-MAF
CONT A/2-21-SMUT
AF-W1-FAAF
AF-W1-SCAF

SCHEMATIC DIAGRAM TS-950SDX

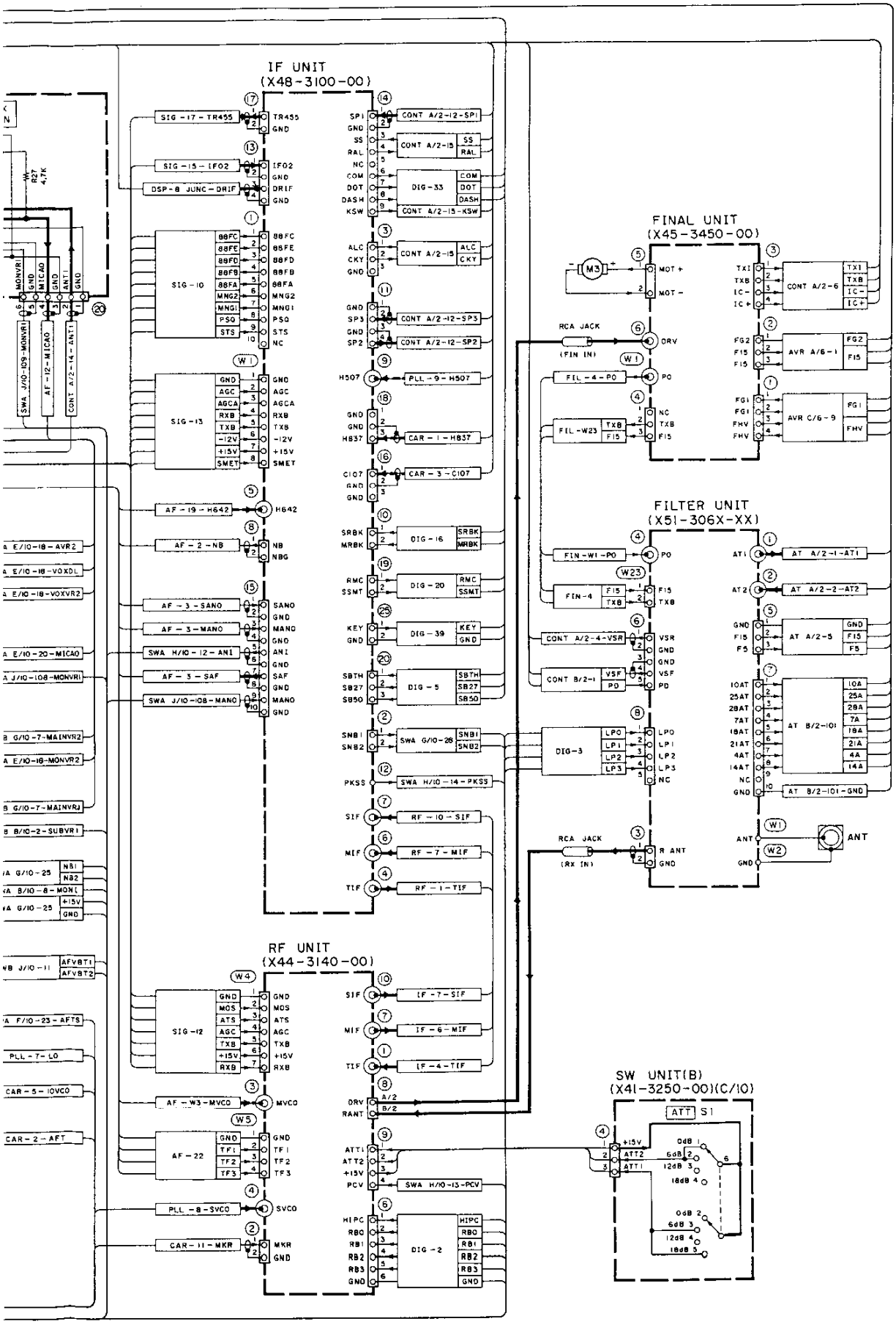

TS-950SDX PC BOARD VIEWS

VCO2 (X58-3390-03) Component side view

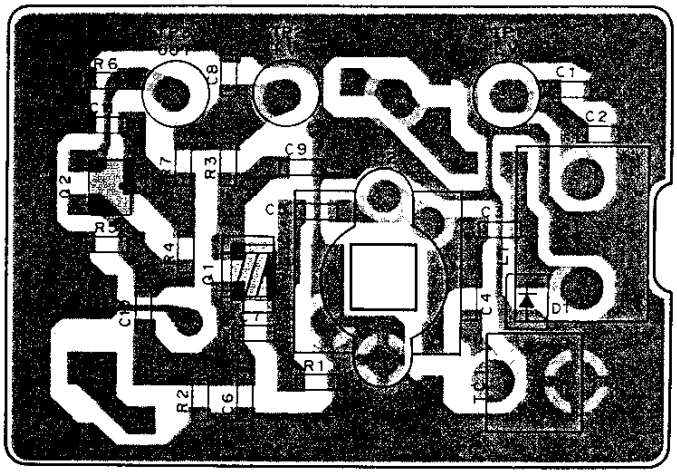

VCO2 (X58-3390-03) Foil side view

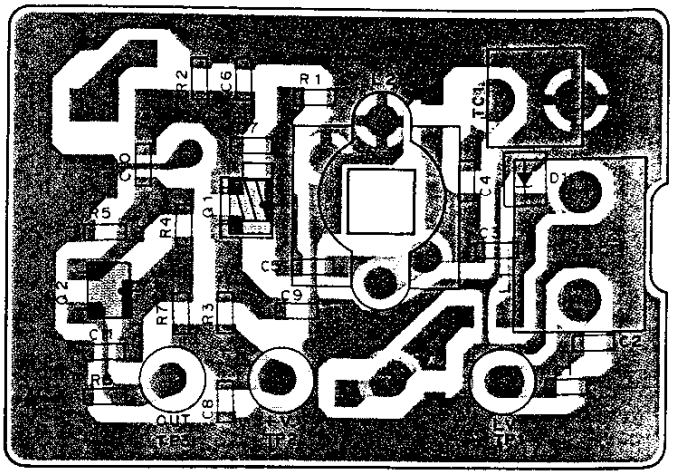

Q1 : 2SK508NV(K52) Q2 : 2SC2714(Y) D1 : 1SV164

VCO (X58-3630-XX) Component side view

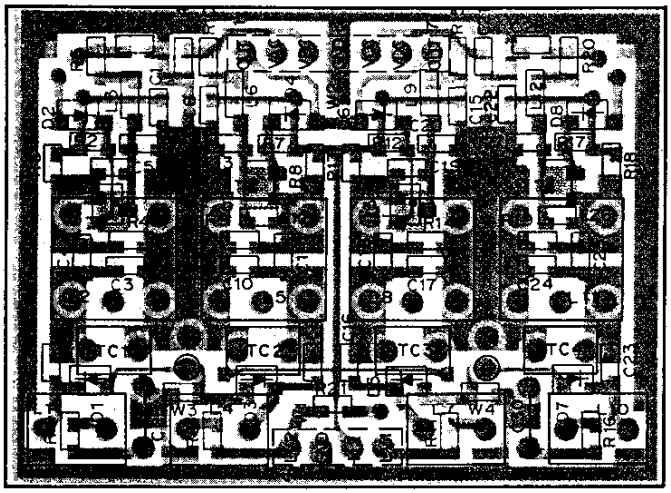

VCO (X58-3630-XX) Foil side view

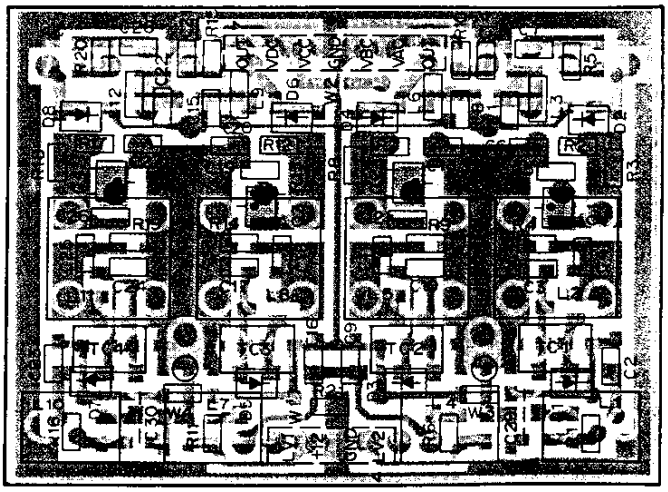

Q1–4 : 2SK210(GR) D1, 3, 5, 7 : 1SV166 D2, 4, 6, 8 : RLS135

VOX (X59-1080-01) Component side view

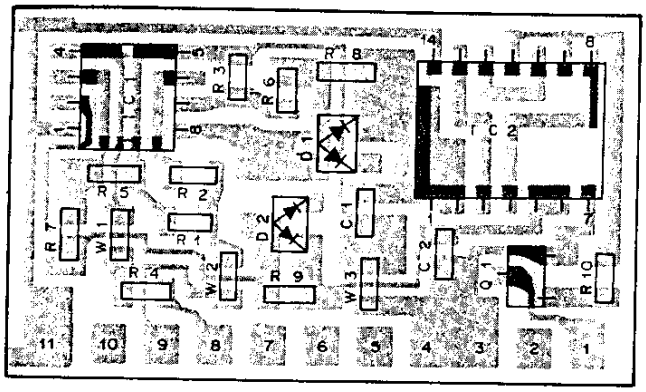

IC1 : LM2904M IC2 : TC4001BF Q1 : 2SC2712(Y)
D1, 2 : DAP202(K)

FM MIC (X59-3000-03) Component side view

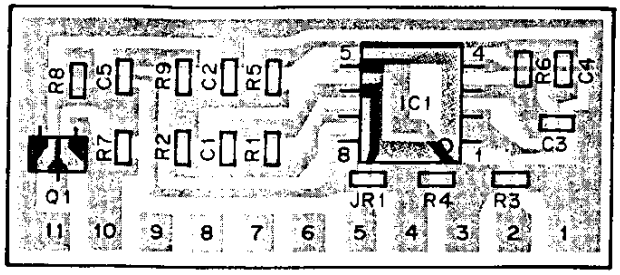

IC1 : NJM4558M Q1 : 2SC2712(Y)

NB2 (X59-3350-00) Component side view

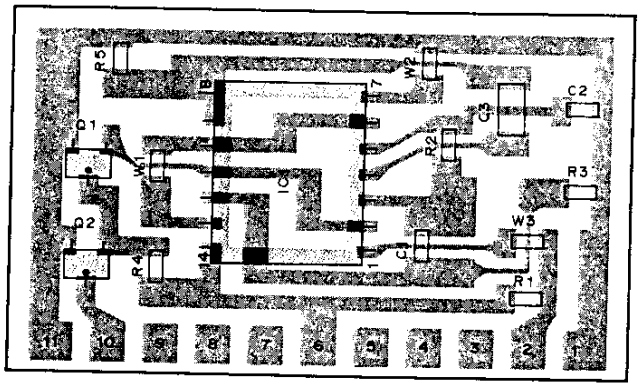

IC1 : TC4011BF Q1,2 : DTC114EK

VCO1 (X59-3440-00) Component side view

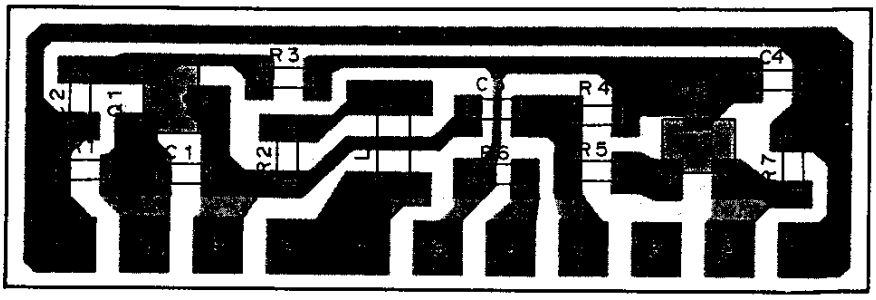

Q1 : 2SK210(GR) Q2 : 2SC2714(Y)

LPF (X59-3450-XX) Component side view

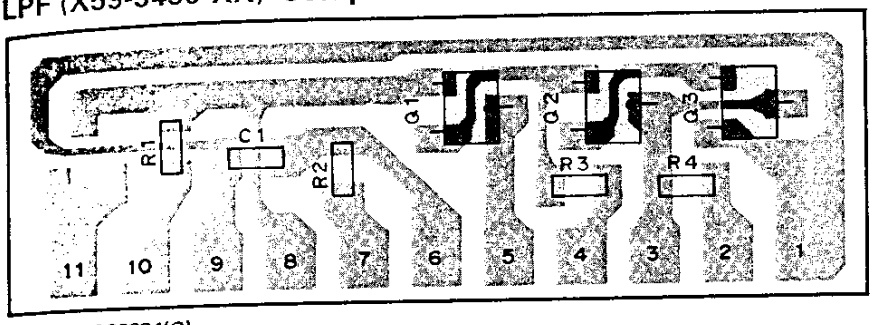

Q1–3 : 2SC3324(G)

MKR (X59-3640-00) Component side view

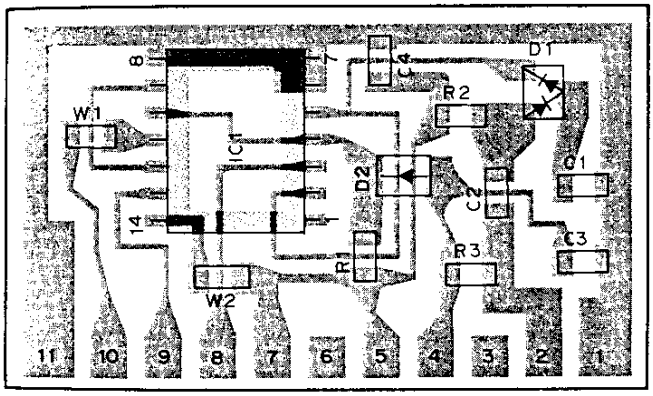

IC1 : TC4013BF D1 : DA204K D2 : RLS73

CWT (X59-3660-00) Component side view

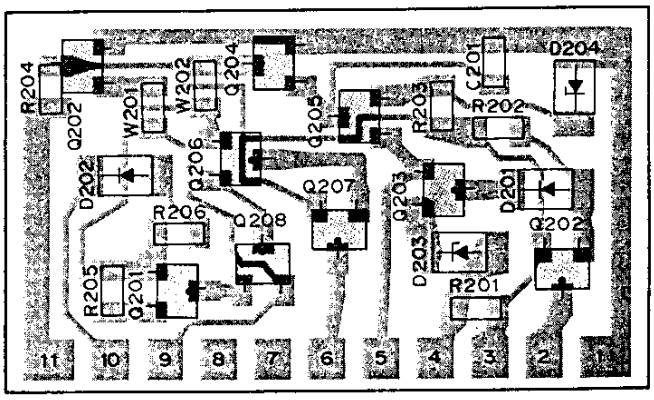

Q201 : 2SA1162(Y) Q202, 205, 207 : DTA144EK
Q203, 204, 206 : DTC144EK Q208 : DTC114TK
D201, 202 : RLS73 D203 : RLZJ3.6B D204 : RLZJ4.7B

MAP (X59-3670-00) Component side view

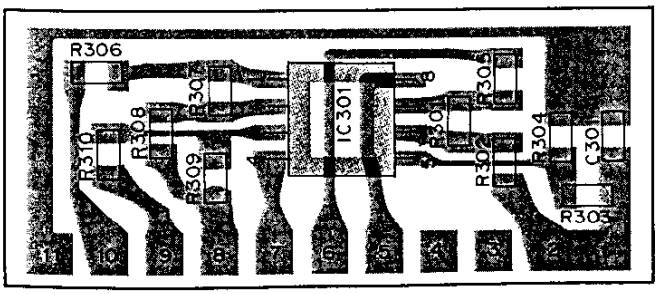

IC301 : NJM4558M

RX (X59-3680-00) Component side view

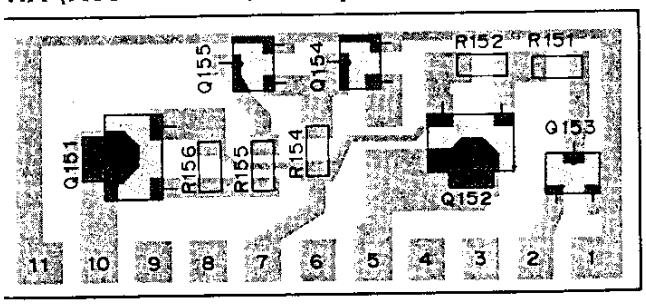

151, 152 : 2SA1204(Y) Q153–155 : DTC114TK

ALC (X59-3700-00) Component side view

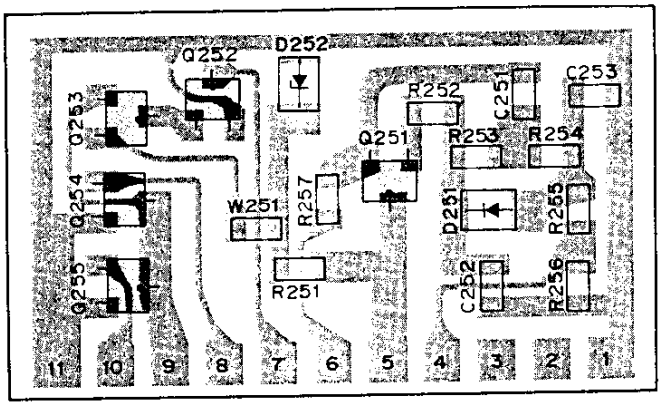

Q251 : 2SC2712(Y) Q252, 254, 255 : DTC144EK Q253 : DTA144EK
D251 : RLS73 D252 : RLZJ12B

MIC AMP (X59-3710-01) Component side view

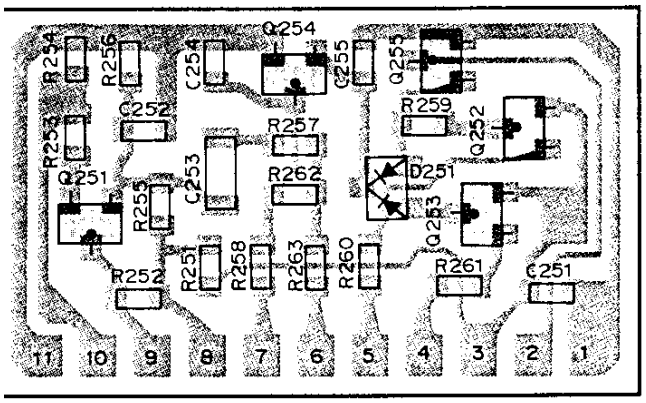

Q251 : 2SC3324(G) Q252, 253 : DTA114EK Q254 : DTC114TK
Q255 : DTC114EK D251 : DAN202K

2SA1162
2SC2712
2SC2714
2SC3324
DTA114EK
DTA144EK
DTC114EK
DTC114TK
DTC144EK

2SK210

2SK508NV

2SA1204

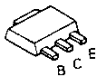

LM2904M

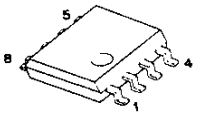

NJM4558M

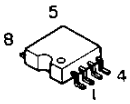

TC4001BF
TC4011BF
TC4013BF

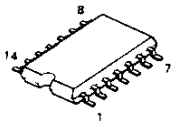

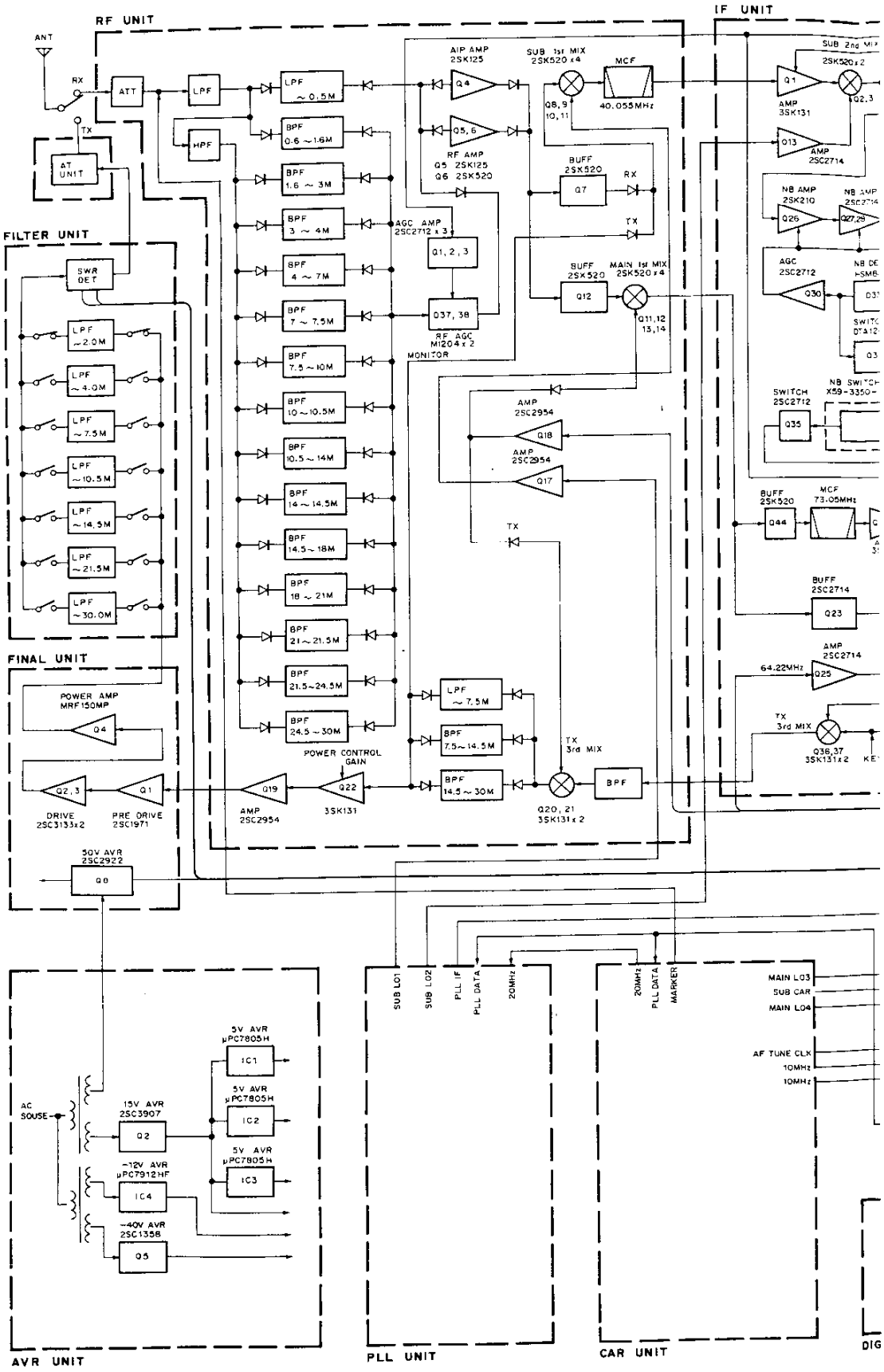
RF UNIT
IF UNIT
ANT
RX
TX
ATT
LPF
HPF
AT UNIT
LPF ~0.5M
BPF 0.6 ~1.6M
BPF 1.6 ~ 3M
BPF 3 ~ 4M
BPF 4 ~ 7M
BPF 7 ~ 7.5M
BPF 7.5 ~ 10M
BPF 10 ~10.5M
BPF 10.5 ~ 14M
BPF 14 ~14.5M
BPF 14.5 ~ 18M
BPF 18 ~ 21M
BPF 21 ~ 21.5M
BPF 21.5~24.5M
BPF 24.5 ~ 30M
AIP AMP 2SK125
Q4
Q5, 6
RF AMP Q5 2SK125 Q6 2SK520
SUB 1st MIX 2SK520 x4
Q8, 9 10, 11
MCF
40.055MHz
BUFF 2SK520
Q7
AGC AMP 2SC2712 x 3
Q1, 2, 3
Q37, 38
RF AGC M1204 x 2
MONITOR
BUFF 2SK520
Q12
MAIN 1st MIX 2SK520 x4
Q11, 12 13, 14
AMP 2SC2954
Q18
Q17
LPF ~7.5M
BPF 7.5~14.5M
BPF 14.5 ~ 30M
TX 3rd MIX
Q20, 21 3SK131 x 2
BPF
POWER CONTROL GAIN
Q19
Q22
AMP 2SC2954
3SK131
FILTER UNIT
SWR DET
LPF ~2.0M
LPF ~4.0M
LPF ~7.5M
LPF ~10.5M
LPF ~14.5M
LPF ~21.5M
LPF ~30.0M
FINAL UNIT
POWER AMP MRF150MP
Q4
Q2, 3
Q1
DRIVE 2SC3133x2
PRE DRIVE 2SC1971
30V AVR 2SC2922
Q0
SUB 2nd MIX
2SK520 x 2
Q1
Q2, 3
AMP 3SK131
Q13
AMP 2SC2714
NB AMP 2SK210
Q26
NB AMP 2SC2714
Q27, 29
AGC 2SC2712
Q30
SWITCH 2SC2712
Q35
BUFF 2SK520
Q44
MCF 73.05MHz
BUFF 2SC2714
Q23
AMP 2SC2714
64.22MHz
Q25
TX 3rd MIX
Q36, 37 3SK131 x 2
AC SOUSE
15V AVR 2SC3907
Q2
-12V AVR μPC7912HF
IC4
-40V AVR 2SC1358
Q5
5V AVR μPC7805H
IC1
IC2
IC3
AVR UNIT
SUB LO1
SUB LO2
PLL IF
PLL DATA
20MHz
PLL UNIT
20MHz
PLL DATA
MARKER
MAIN LO3
SUB CAR
MAIN LO4
AF TUNE CLK
10MHz
10MHz
CAR UNIT

TS-950SDX

BLOCK DIAGRAM

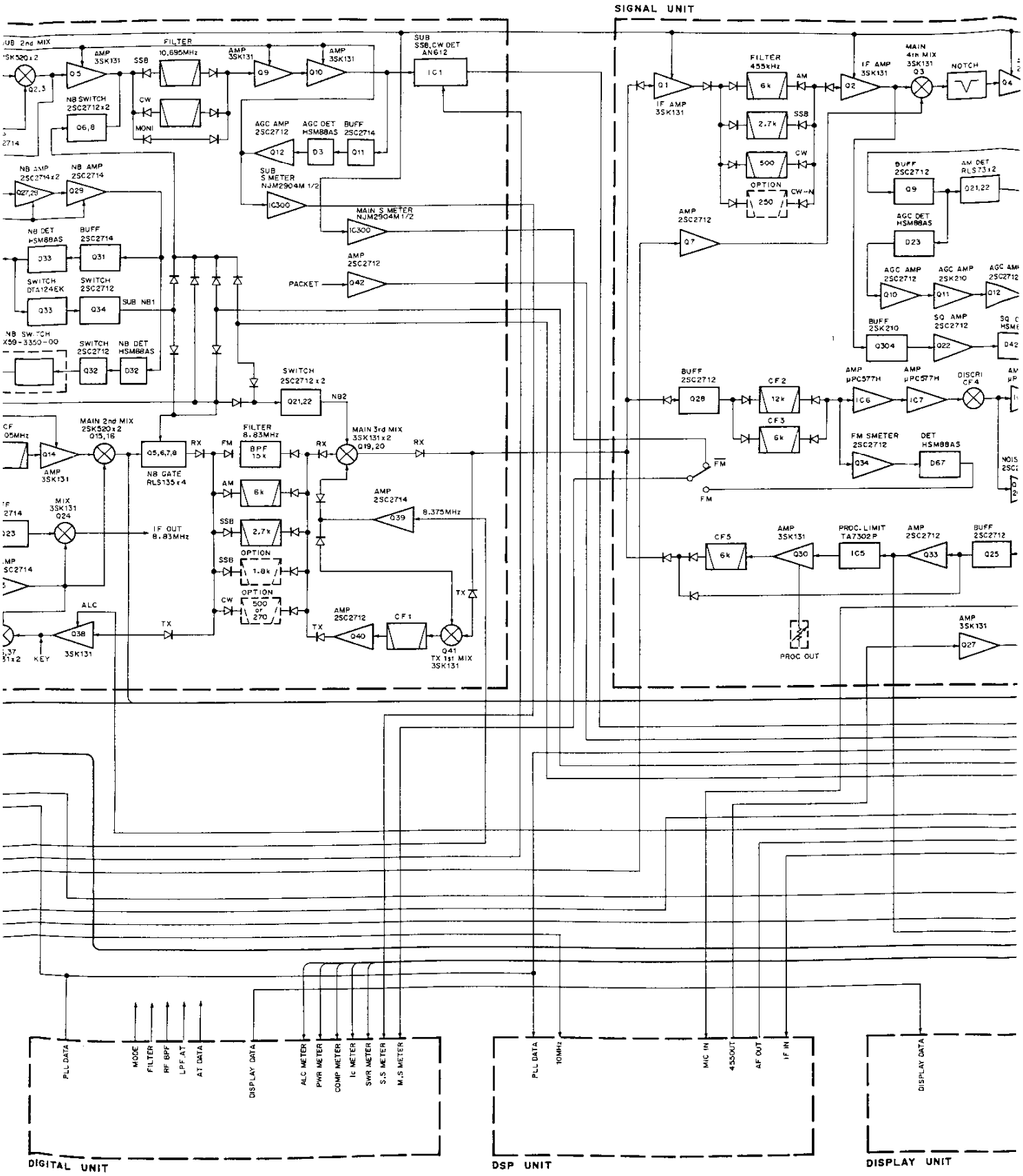

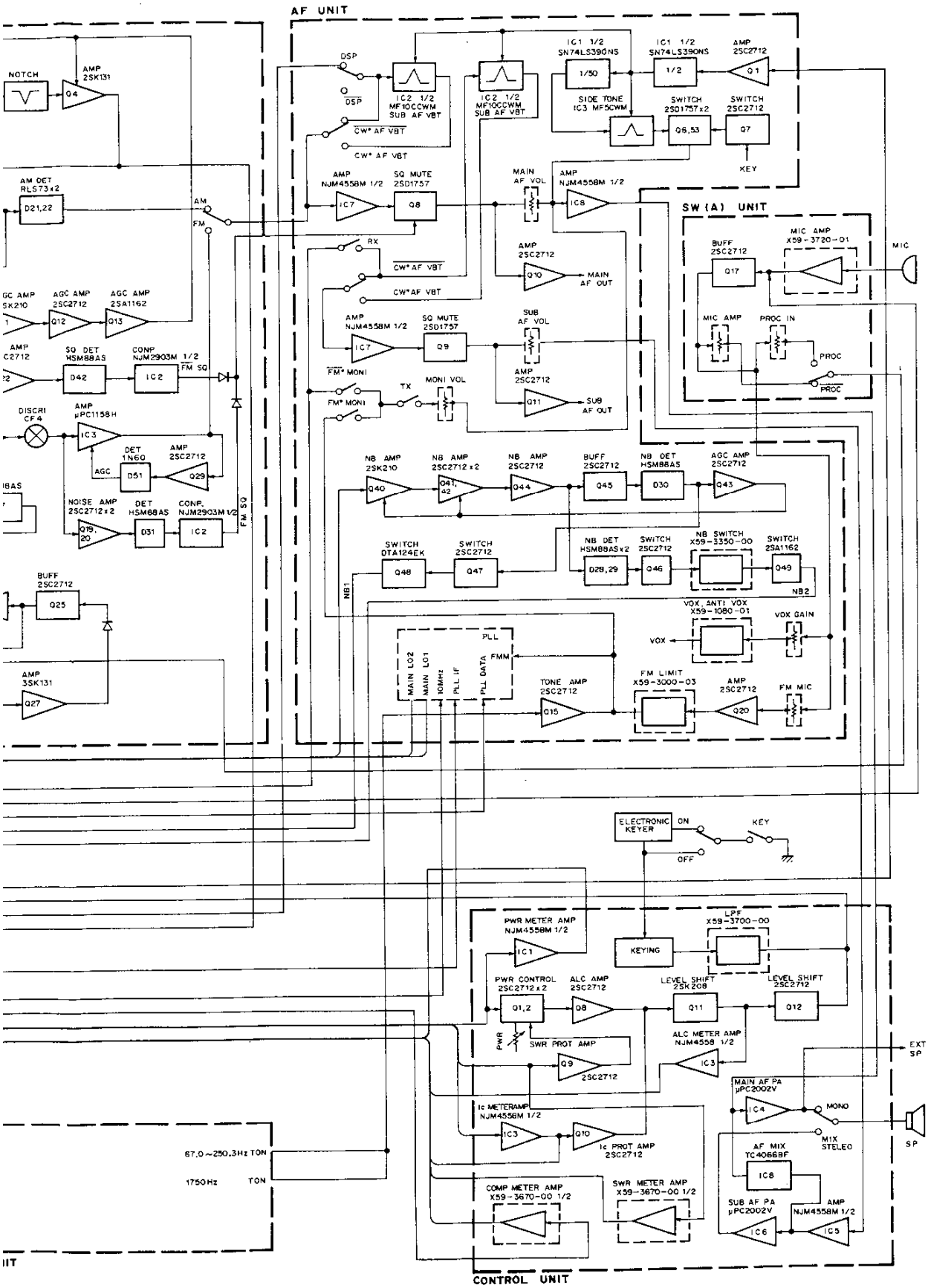
AF UNIT
NOTCH
AMP 2SK131
Q4
AM DET RLS73x2
D21,22
AM
FM
DSP
IC2 1/2 MF10CCWM SUB AF VBT
CW* AF VBT
IC1 1/2 SN74LS390NS
1/50
1/2
AMP 2SC2712
Q1
SIDE TONE IC3 MF5CWM
SWITCH 2SD1757x2
Q6,53
SWITCH 2SC2712
Q7
KEY
AMP NJM4558M 1/2
IC7
SQ MUTE 2SD1757
Q8
MAIN AF VOL
IC8
RX
TX
AMP 2SC2712
Q10
MAIN AF OUT
Q9
SUB AF VOL
FM* MONI
MONI VOL
Q11
SUB AF OUT
SW (A) UNIT
BUFF 2SC2712
Q17
MIC AMP X59-3720-01
MIC
MIC AMP
PROC IN
PROC
AGC AMP 2SK210
AGC AMP 2SC2712
Q12
AGC AMP 2SA1162
Q13
SQ DET HSM88AS
D42
CONP NJM2903M 1/2
IC2
FM SQ
DISCRI CF4
AMP μPC1158H
IC3
DET 1N60
D51
AMP 2SC2712
Q29
AGC
NOISE AMP 2SC2712x2
Q19, 20
DET HSM88AS
D31
CONP. NJM2903M 1/2
NB AMP 2SK210
Q40
NB AMP 2SC2712x2
Q41, 42
NB AMP 2SC2712
Q44
BUFF 2SC2712
Q45
NB DET HSM88AS
D30
AGC AMP 2SC2712
Q43
SWITCH DTA124EK
Q48
SWITCH 2SC2712
Q47
NB DET HSM88ASx2
D28,29
Q46
NB SWITCH X59-3350-00
SWITCH 2SA1162
Q49
NB1
NB2
BUFF 2SC2712
Q25
VOX, ANTI VOX X59-1080-01
VOX GAIN
VOX
PLL
FMM
MAIN LO2
MAIN LO1
10MHz
PLL IF
PLL DATA
TONE AMP 2SC2712
Q15
FM LIMIT X59-3000-03
AMP 2SC2712
Q20
FM MIC
AMP 3SK131
Q27
ELECTRONIC KEYER
ON
OFF
KEY
PWR METER AMP NJM4558M 1/2
IC1
KEYING
LPF X59-3700-00
PWR CONTROL 2SC2712x2
Q1,2
ALC AMP 2SC2712
Q8
LEVEL SHIFT 2SK208
Q11
LEVEL SHIFT 2SC2712
Q12
PWR
SWR PROT AMP
Q9
2SC2712
ALC METER AMP NJM4558 1/2
IC3
EXT SP
MAIN AF PA μPC2002V
IC4
MONO
MIX
STELEO
SP
Ic METERAMP NJM4558M 1/2
IC3
Q10
Ic PROT AMP 2SC2712
AF MIX TC40669F
IC8
67.0~250.3Hz TON
1750Hz TON
COMP METER AMP X59-3670-00 1/2
SWR METER AMP X59-3670-00 1/2
SUB AF PA μPC2002V
IC6
AMP NJM4558M 1/2
IC5
CONTROL UNIT

LEVEL DI

RX Section

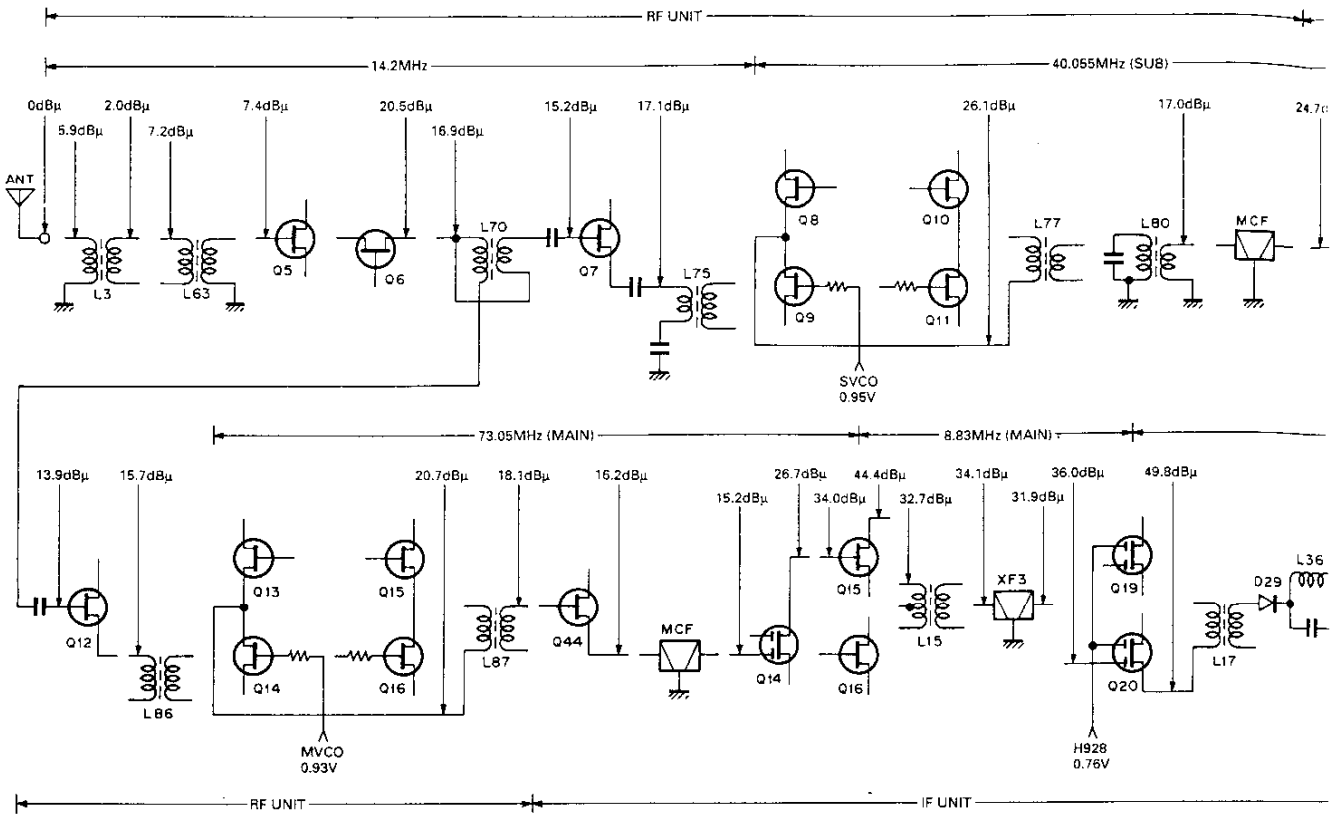

Frequency : 14.200MHz
Input : 0dBμ
AF output : 0.63V/8Ω

TX Section

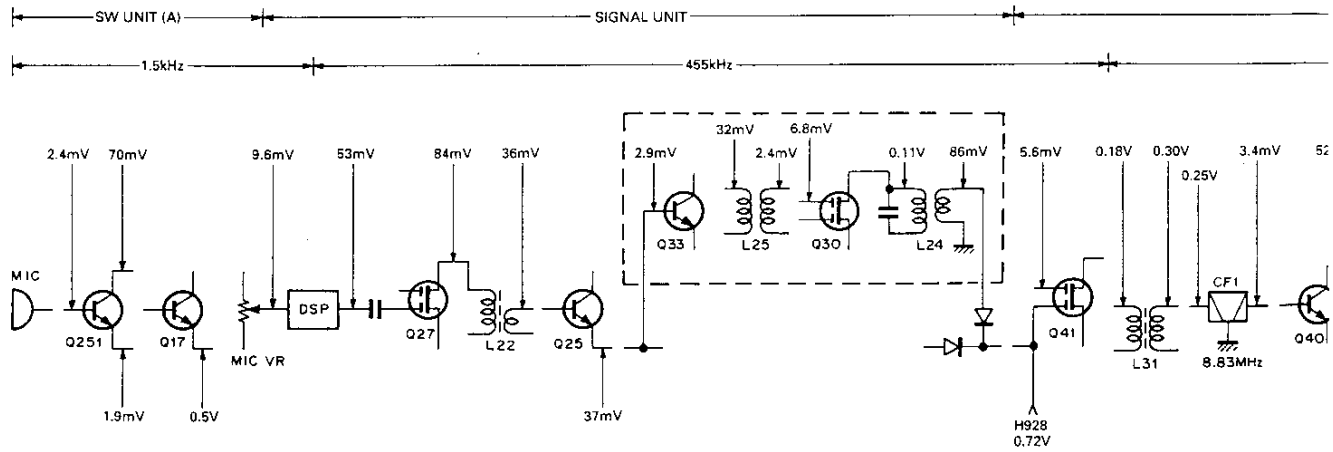

LEVEL DIAGRAM

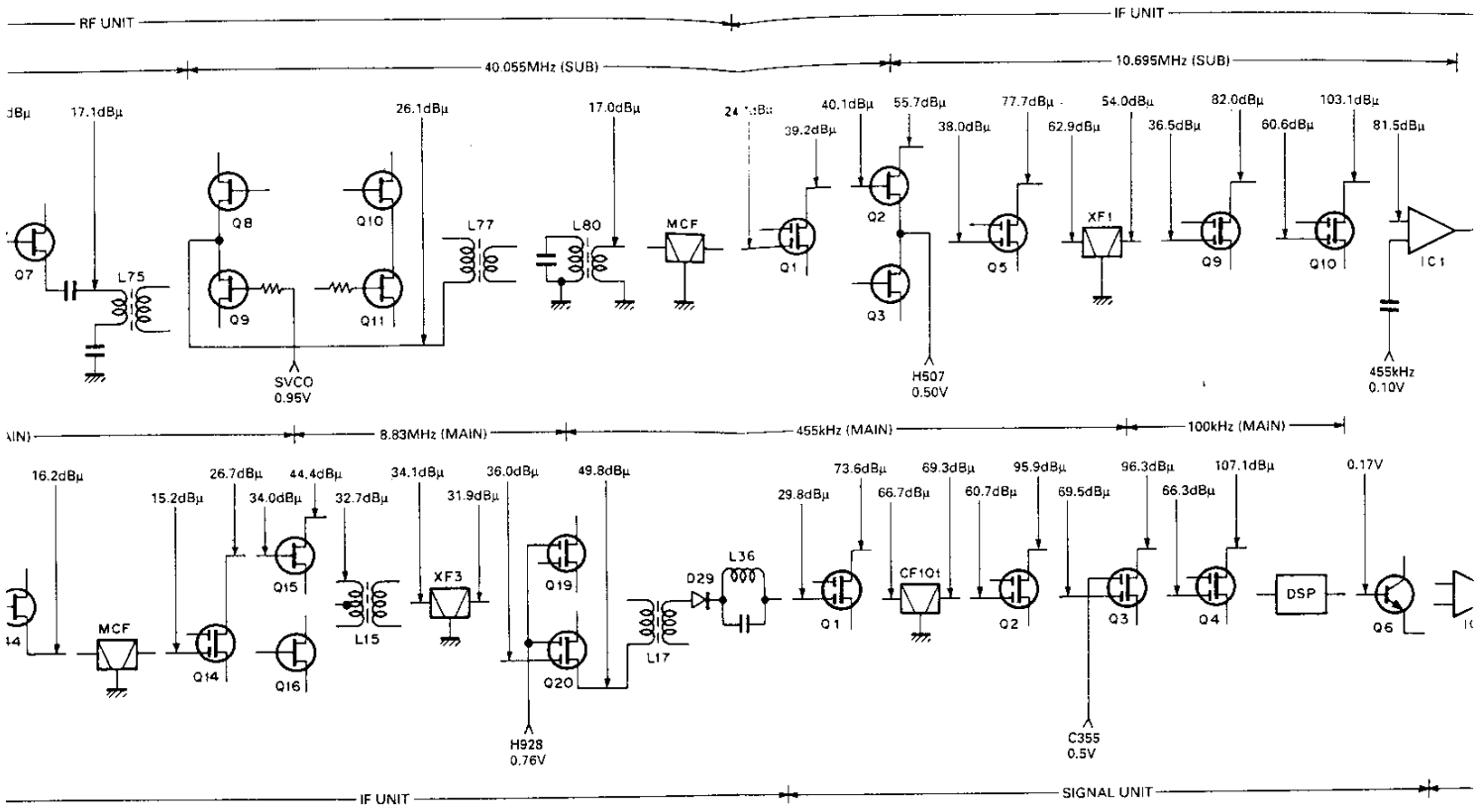

Frequency : 14.200MHz
Input : 0dBμ
AF output : 0.63V/8Ω

1. The figures shown are signal generator output required for a constant audi
   Set the AF gain control for 0.63V/8Ω audio output at 0dBμ signal generator
2. To measure signal generator output connect a 0.01μF capacitor between t
   (100kHz or less : 0.1μF capacitor)
3. AIP : OFF

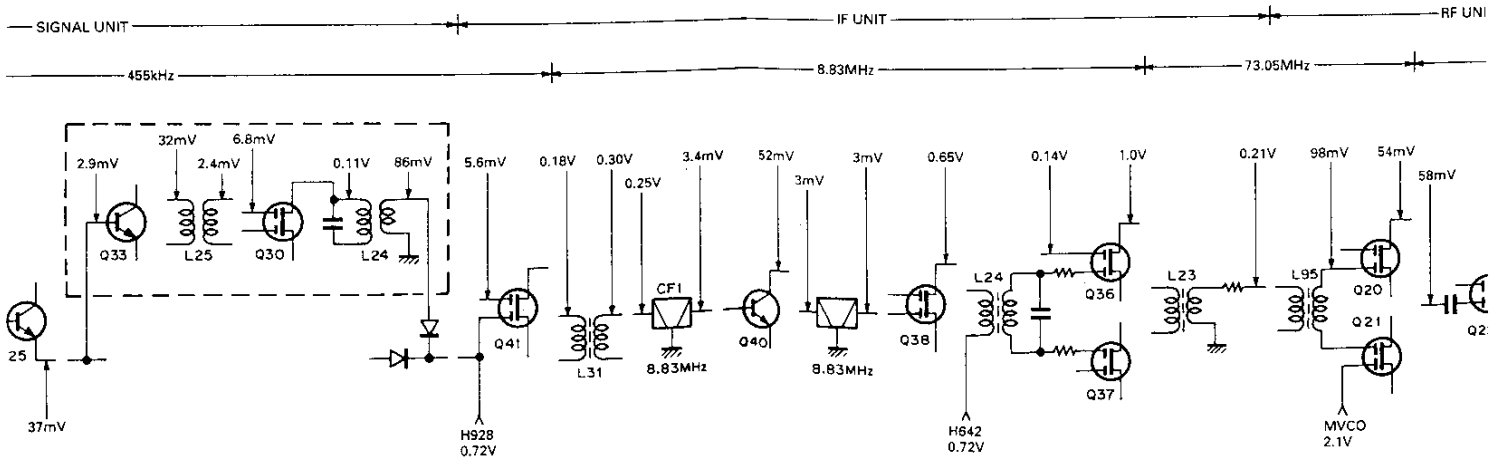

Frequency : 14.200MHz

1. The high frequency section is measured by the RF voltmeter in the CW m
   The low frequency section is measured by the AF voltmeter in the USB m
2. The value of the audio input signal is obtained by the 1kHz/5mV single to
   the ALC zone of the meter in the USB mode or standard modulation (±3k
3. When the value of the audio input signal is obtained by the 4kHz single to
   the ALC zone of the meter by PROC OUT VR, and also, adjust starting lev
4. The value of the final unit is measured by the oscilloscope in the CW moc

DIAGRAM

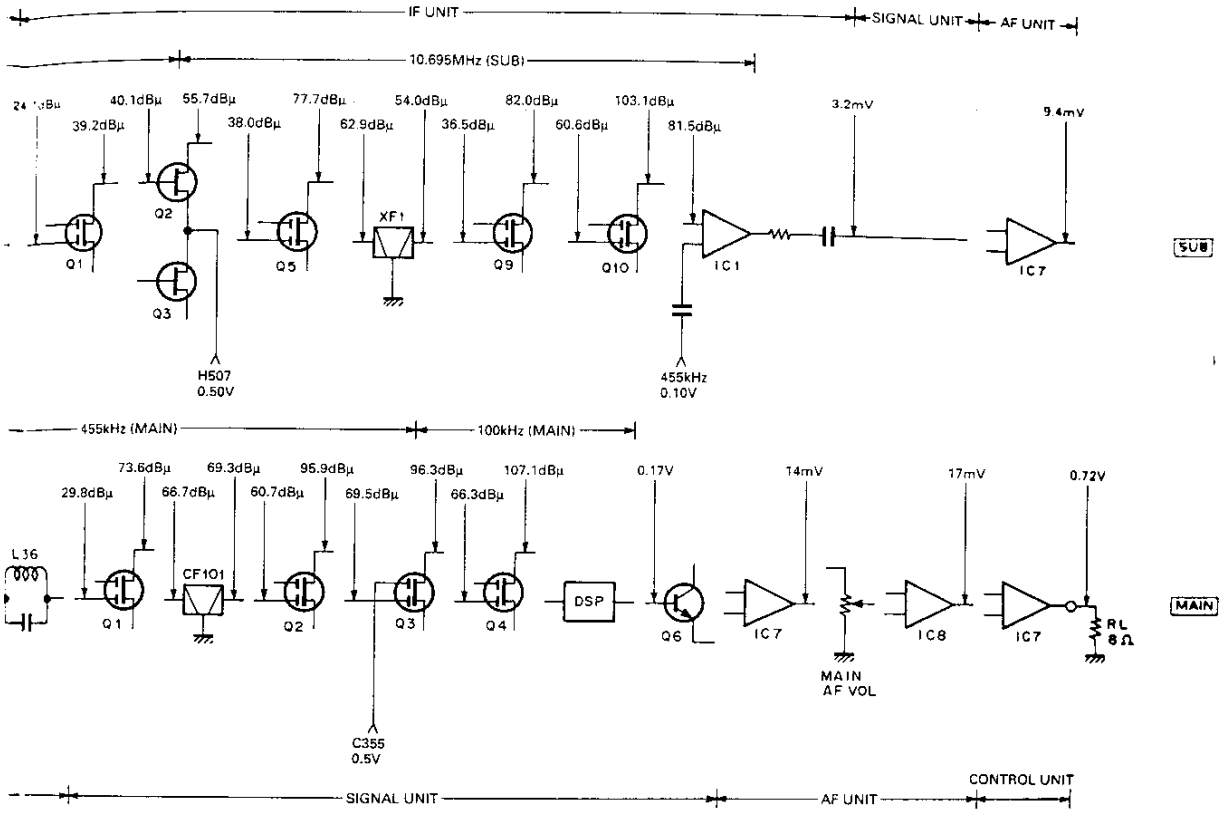

1. The figures shown are signal generator output required for a constant audio output with a constant AF gain control setting. Set the AF gain control for 0.63V/8Ω audio output at 0dBμ signal generator input at 14.200MHz.
2. To measure signal generator output connect a 0.01μF capacitor between the signal generator and the check point. (100kHz or less : 0.1μF capacitor)
3. AIP : OFF

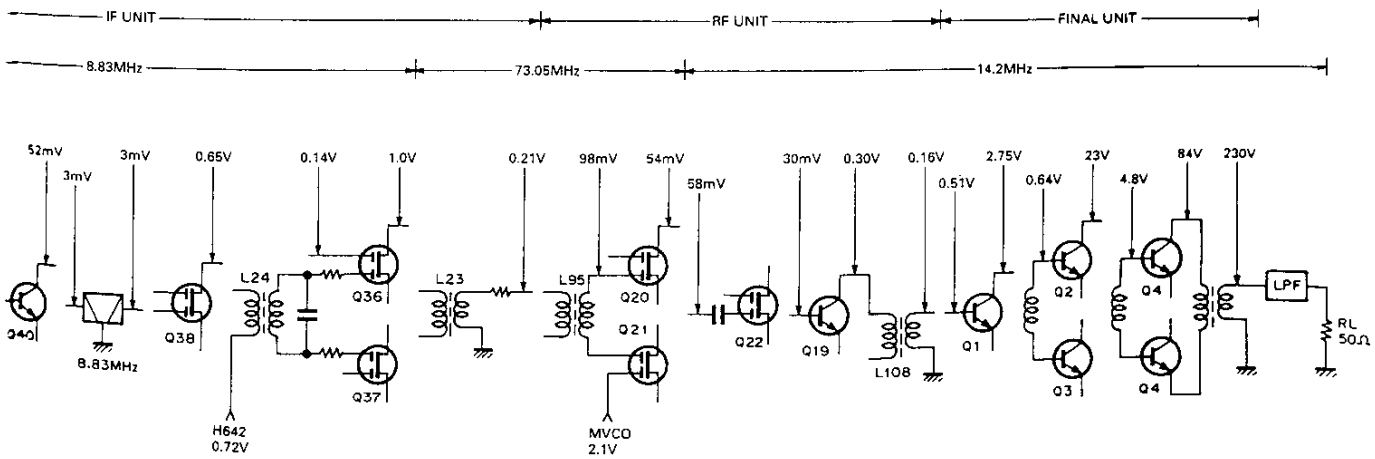

Frequency : 14.200MHz

1. The high frequency section is measured by the RF voltmeter in the CW mode. (In the dotted line : USB mode) The low frequency section is measured by the AF voltmeter in the USB mode.
2. The value of the audio input signal is obtained by the 1kHz/5mV single tone which measures almost full scale within the ALC zone of the meter in the USB mode or standard modulation (±3kHz, dev.) in the FM mode.
3. When the value of the audio input signal is obtained by the 4kHz single tone which adjusts almost full scale within the ALC zone of the meter by PROC OUT VR, and also, adjust starting level within the COMP zone of the meter by PROC IN VR.
4. The value of the final unit is measured by the oscilloscope in the CW mode.

DRU-2 (DIGITAL RECORDING UNIT)

DRU-2 Circuit Description

1. Overview

The DRU-2 is an optional digital audio recording/playback unit for the TS-950SDX and TS-850 series. It has the following features.

- Record receive tone (main unit speaker output) and transmit tone (main unit microphone input)
- Play back via the speaker or output as transmit modulation signal
- Built-in lithium battery for backing up recorded data

2. Operation

- **Receive tone (main band)**

The receive signal from the VO pin goes to pin 1 (0Y) of the multiplexer IC (TC4052BF). It goes to pin 59 (MIC IN) of IC3 (TC8830F) from pin 3 (Y). It is amplified by about 26dB by the microphone amplifier in IC3, output from from pin 60 (C1), fed to pin 63 (C2) again, and amplified by 20dB. This signal is output to pin 64 (MIC OUT) and input to pin 65 (ADI) to record the receive tone.

- **Recording transmit tone (MIC input)**

The MIC input from the VI pin is amplified by Q5 and goes to pin 2 (2Y) of the multiplexer, IC1 (TC4052BF). The signal is input to IC3 (TC8830F) from pin 3 (Y) and recorded in the same way as the receive tone.

- **Playback from the internal speaker**

The D/A converter output from pin 66 (DAO) of IC3 (TC8830F) passes through filter CR, is amplified by Q6, and goes to pin 13 (X) of the multiplexer IC1 (TC 4052BF). It is output from pin 14 (1X) to the VO pin.

- **Playback as transmit modulation signal**

When a playback transmission operation is performed, the D/A converter output from pin 66 (DAO) of IC3 (TC8830F) passes through filter CR, is amplified by Q6, and goes to pin 13 (X) of the multiplexer, IC1 (TC4052BF) in the same way as for playback from the internal speaker. The signal is output from pin 11 (3X).

	VOA (pin 10)	VOB (pin 9)	ON channel
SP playback	H	L	1X (pin 14)
Transmission playback	H	H	3X (pin 11)
SP recording	L	L	0Y (pin1)
MIC recording	L	H	2Y (pin 2)

Table 1 IC1 (TC4052BF) operation

DRU-2 Description of Components

ACCESSORY UNIT (X42-3010-01)

Ref. No.	Use/function	Description
IC1	Multiplexer	See circuit description.
IC3	Voice recording/playback	See semiconductor data.
IC4~7	SRAM	
Q5	AF amplification	MIC input amplification.
Q6	AF amplification	Playback tone amplification.
D1	Reverse-flow prevention	
D2	Reverse-flow prevention	Backup.

DRU-2 (DIGITAL RECORDING UNIT)

DRU-2 Semiconductor Data

1. Voice recording/playback : TC8830F (IC3)

• Terminal connection diagram

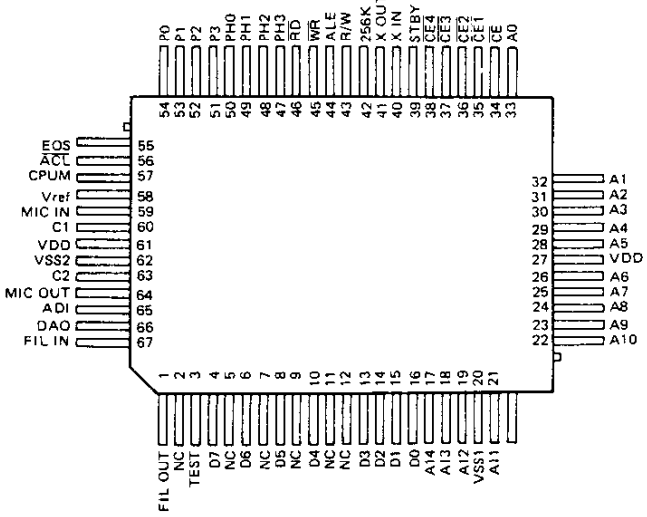

• Block diagram

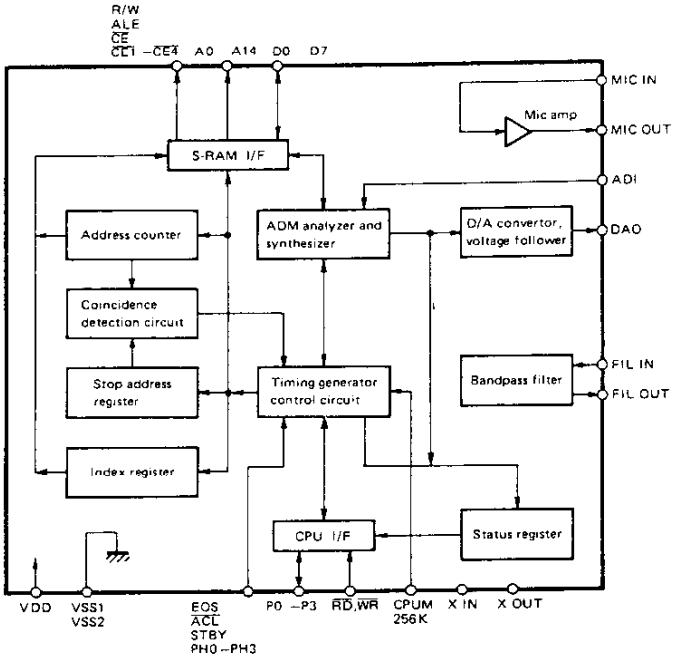

• Terminal functions

Pin No.	Pin name	I/O	Function	Pin No.	Pin name	I/O	Function
1	FIL OUT	O	Not used.	41	X OUT	O	512kHz oscillation circuit.
2	NC	–	Not connected.	42	256K	I	64K/256K RAM select, "H" when 256K used.
3	TEST	–	Not used.				
4	D7	I/O	RAM data I/O.	43	R/W	O	RAM read/write output.
5	NC	–	Not connected.	44	ALE	–	Not used.
6	D6	I/O	RAM data I/O.	45	$\overline{WR}$	I	Write pulse input.
7	NC	–	Not connected.	46	$\overline{RD}$	I	Read pulse input.
8	D5	I/O	RAM data I/O.	47~50	PH3~PH0	–	Not used.
9	NC	–	Not connected.	51~54	P3~P0	I/O	Data bus.
10	D4	I/O	RAM data I/O.	55	EOS	–	Not used.
11,12	NC	–	Not connected.	56	ACL	I	Reset signal input.
13~16	D3~D0	I/O	RAM data I/O.	57	CPUM	I	"H" when CPU control enabled.
17~19	A14~A12	O	RAM address output.	58	Vref	O	Analog circuit reference voltage output.
20	V_{SS1}	–	GND.	59	MIC IN	I	Mic amp. 1 input.
21~26	A11~A6	O	RAM address output.	60	C1	O	Mic amp. 1 output.
27	V_{DD}	–	Power supply.	61	V_{DD}	–	Power supply.
28~33	A5~A0	O	RAM address output.	62	V_{SS2}	–	GND.
34	$\overline{CE}$	–	Not used.	63	C2	I	Mic amp. 2 input.
35~38	$\overline{CE1}$~$\overline{CE4}$	O	RAM chip enable.	64	MIC OUT	O	Mic amp. 2 output.
39	STBY	I	Minimum current standby when standby input is "H".	65	ADI	I	Audio analysis circuit input.
				66	DAO	O	D/A convertor output.
40	X IN	I	512kHz oscillation circuit.	67	FIL IN	I	Not used.

DRU-2 (DIGITAL RECORDING UNIT)

* New Parts
Parts without Parts No. are not supplied.
Les articles non mentionnes dans le Parts No. ne sont pas fournis.
Teile ohne Parts No. werden nicht geliefert.

DRU-2 Parts List

Ref. No. 参照番号	Address 位置	New Parts 新	Parts No. 部品番号	Description 部品名／規格	Destination 仕向	Remarks 備考
				DRU-2		
			B42-3317-04	LABEL		
			B62-0145-00	INSTRUCTION MANUAL		
			G10-0666-04	NON-WOVEN FABRIC		
			G10-0679-04	NON-WOVEN FABRIC		
			G13-0913-04	FORMED PLATE		
			H21-0704-04	PROTECTION SHEET		
			H25-0029-04	PROTECTION BAG		
			H25-0710-04	PROTECTION BAG		
			H52-0156-03	ITEM CARTON BOX		
			H62-0135-04	OUTER PACKING CASE		
			N87-2606-46	BRAZIER HEAD TAPTITE SCREW		
			X42-3010-01	ACCESSORY UNIT		
				ACCESSORY UNIT (X42-3010-01)		
C1			CK73FB1H103K	CHIP C 0.010UF K		
C2			CK73FB1H102K	CHIP C 1000PF K		
C3			CK73FF1E154Z	CHIP C 0.15UF Z		
C4 -6			CK73FB1H103K	CHIP C 0.010UF K		
C7			CK73EF1C105Z	CHIP C 1.0UF Z		
C8 -10			CK73FB1H103K	CHIP C 0.010UF K		
C11			CK73FF1E104Z	CHIP C 0.1UF Z		
C15			CK73FF1E104Z	CHIP C 0.1UF Z		
C17			CK73FF1E104Z	CHIP C 0.1UF Z		
C19			CK73FB1H103K	CHIP C 0.010UF K		
C20			CK73FB1H102K	CHIP C 1000PF K		
C21 ,22			CC73FSL1H101J	CHIP C 100PF J		
C23			CK73FB1H103K	CHIP C 0.010UF K		
C24			C92-0010-05	CHIP TAN 6.8UF 6.3WV		
C25			CK73EB1H104K	CHIP C 0.10UF K		
C26			CK73FB1H103K	CHIP C 0.010UF K		
C27			CC73FSL1H101J	CHIP C 100PF J		
C28			CK73EB1H104K	CHIP C 0.1UF K		
CN1			E40-5207-05	PIN CONNECTOR		
CN2			E40-5206-05	PIN CONNECTOR		
CN3			E40-5181-05	PIN CONNECTOR		
W1			E31-6005-05	CONNECTING WIRE		
W2			E31-6006-05	CONNECTING WIRE		
W3			E31-6007-05	CONNECTING WIRE		
			F20-0520-04	INSULATING BOARD		
			F20-0521-04	INSULATING BOARD		
X1			L77-1398-05	CRYSTAL RESONATOR 3.579545MHZ		
X2			L78-0050-05	RESONATOR 512KHZ		
R1			RK73FB2A103J	CHIP R 10K J 1/10W		
R2			RK73FB2A392J	CHIP R 3.9K J 1/10W		
R3			RK73FB2A103J	CHIP R 10K J 1/10W		
R4			RK73FB2A105J	CHIP R 1.0M J 1/10W		
R5			RK73FB2A102J	CHIP R 1.0K J 1/10W		
R6			R92-0670-05	CHIP R 0 OHM		
R7			RK73FB2A223J	CHIP R 22K J 1/10W		
R8			RK73FB2A102J	CHIP R 1.0K J 1/10W		

E: Scandinavia & Europe K: USA P: Canada W:Europe
U: PX(Far East, Hawaii) T: England M: Other Areas
UE : AAFES(Europe) X: Australia

⚠ indicates safety critical components.

DRU-2 (DIGITAL RECORDING UNIT)

* New Parts
Parts without Parts No. are not supplied.
Les articles non mentionnes dans le Parts No. ne sont pas fournis.
Teile ohne Parts No. werden nicht geliefert.

Ref. No. 参照番号	Address 位置	New Parts 新	Parts No. 部品番号	Description 部品名／規格	Destination 仕向	Remarks 備考
R9			RK73FB2A105J	CHIP R 1.0M J 1/10W		
R10			R92-0670-05	CHIP R 0 OHM		
R11			RK73FB2A223J	CHIP R 22K J 1/10W		
R12 ,13			RK73FB2A222J	CHIP R 2.2K J 1/10W		
R14			RK73FB2A472J	CHIP R 4.7K J 1/10W		
R18			RK73FB2A105J	CHIP R 1.0M J 1/10W		
R19			RK73FB2A562J	CHIP R 5.6K J 1/10W		
R20			RK73FB2A104J	CHIP R 100K J 1/10W		
R21			RK73FB2A103J	CHIP R 10K J 1/10W		
R22			RK73FB2A102J	CHIP R 1.0K J 1/10W		
R23			RK73FB2A564J	CHIP R 560K J 1/10W		
R24			RK73FB2A683J	CHIP R 68K J 1/10W		
R25			RK73FB2A223J	CHIP R 22K J 1/10W		
R26			RK73FB2A105J	CHIP R 1.0M J 1/10W		
R27			RK73FB2A222J	CHIP R 2.2K J 1/10W		
R28			RK73FB2A224J	CHIP R 220K J 1/10W		
R29 -31			R92-0670-05	CHIP R 0 OHM		
R32			RK73FB2A220J	CHIP R 22 J 1/10W		
R33			RK73FB2A394J	CHIP R 390K J 1/10W		
D1 ,2			1SS184	DIODE		
IC1			TC4052BF	IC		
IC2			LR4102N	IC		
IC3			TC8830F	IC		
IC4 -7			HM62256LFPI-12T	IC		
IC4 -7			HM62256LFP-15T	IC		
Q1 ,2			2SC2712(BL)	TRANSISTOR		
Q5 -6			2SC2712(BL)	TRANSISTOR		
			W09-0326-05	LITHIUM BATTERY		

E: Scandinavia & Europe K: USA P: Canada W:Europe
U: PX(Far East, Hawaii) T: England M: Other Areas
UE: AAFES(Europe) X: Australia

⚠ indicates safety critical components.

TS-950SDX

DRU-2 (DIGITAL RECORDING UNIT)

DRU-2 PC Board Views

ACCESSORY UNIT (X42-3010-01) Component side view

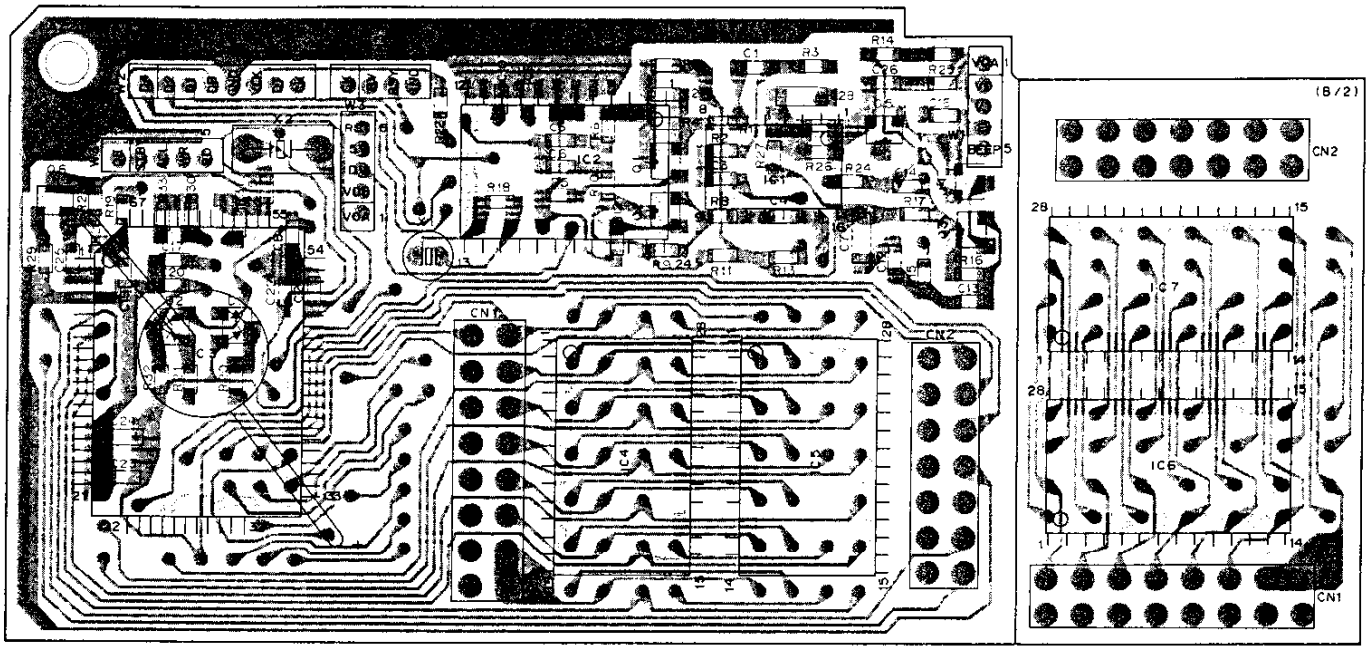

IC1 : TC4052BF IC2 : LR4102N IC3 : TC8830F IC4~7 : HM62256LFPI-12T Q1,2,5,6 : 2SC2712(BL) D1,2 : 1SS184

ACCESSORY UNIT (X42-3010-01) Foil side view

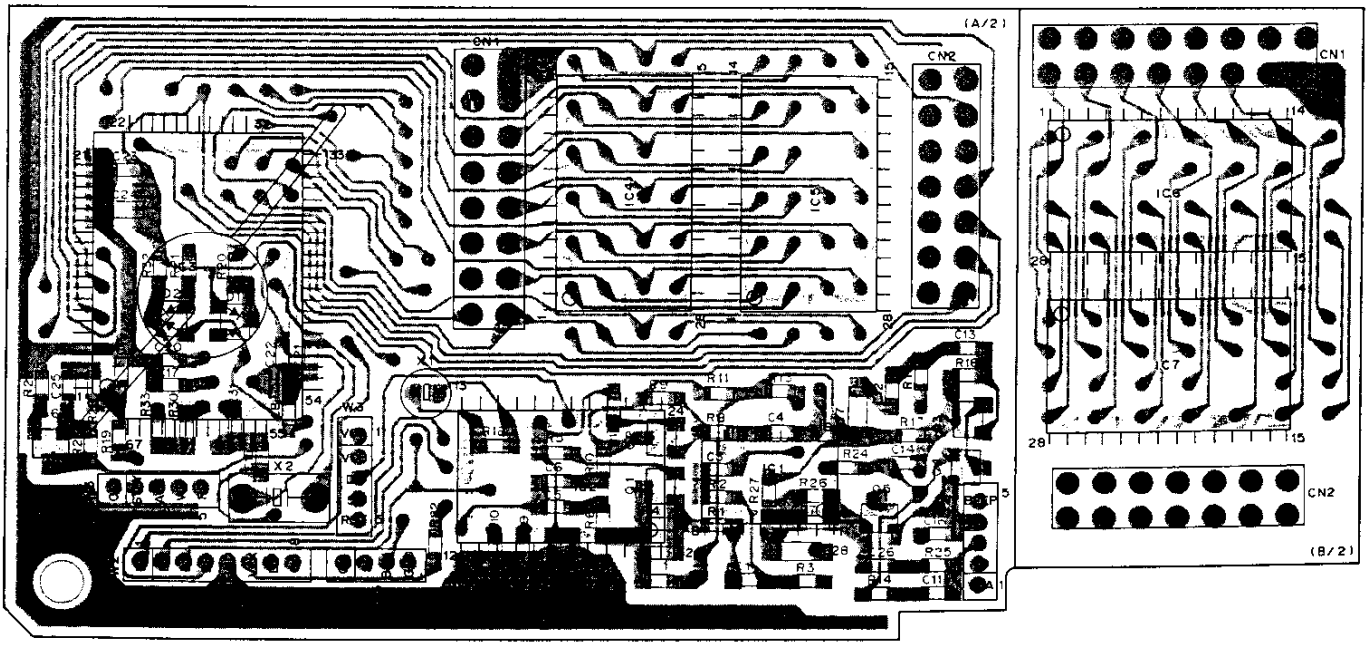

2SC2712(BL) HM62256LFPI-12T TC4052BF LR4102N TC8830F

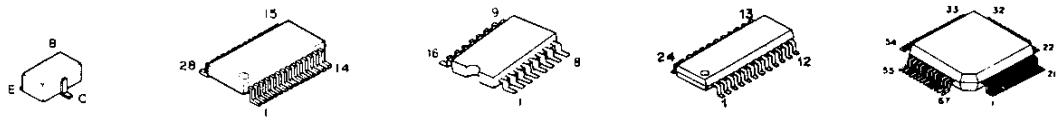

DRU-2 Schematic Diagram

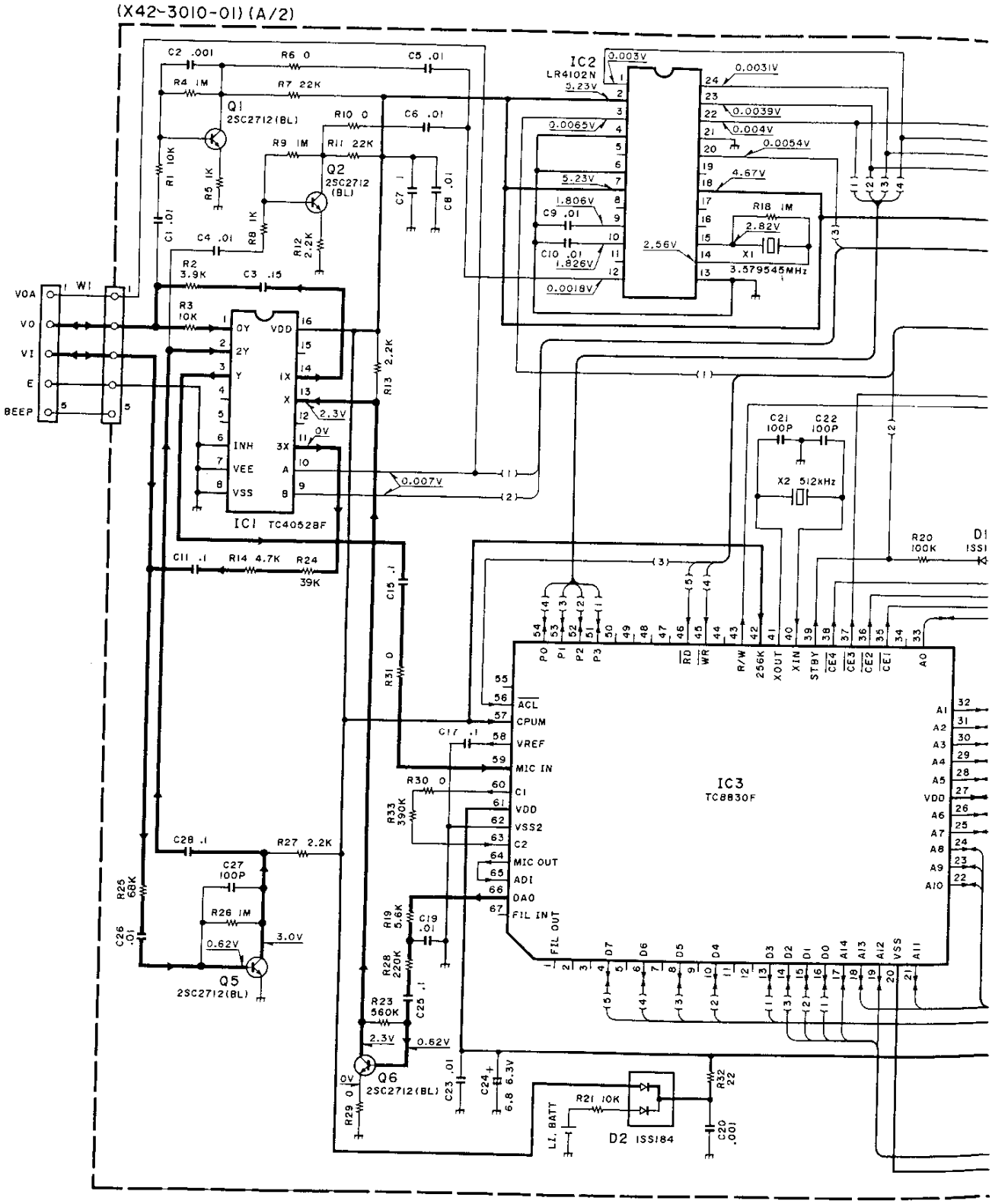

TS-950SDX TS-950SDX

DRU-2 (DIGITAL RECORDING UNIT)

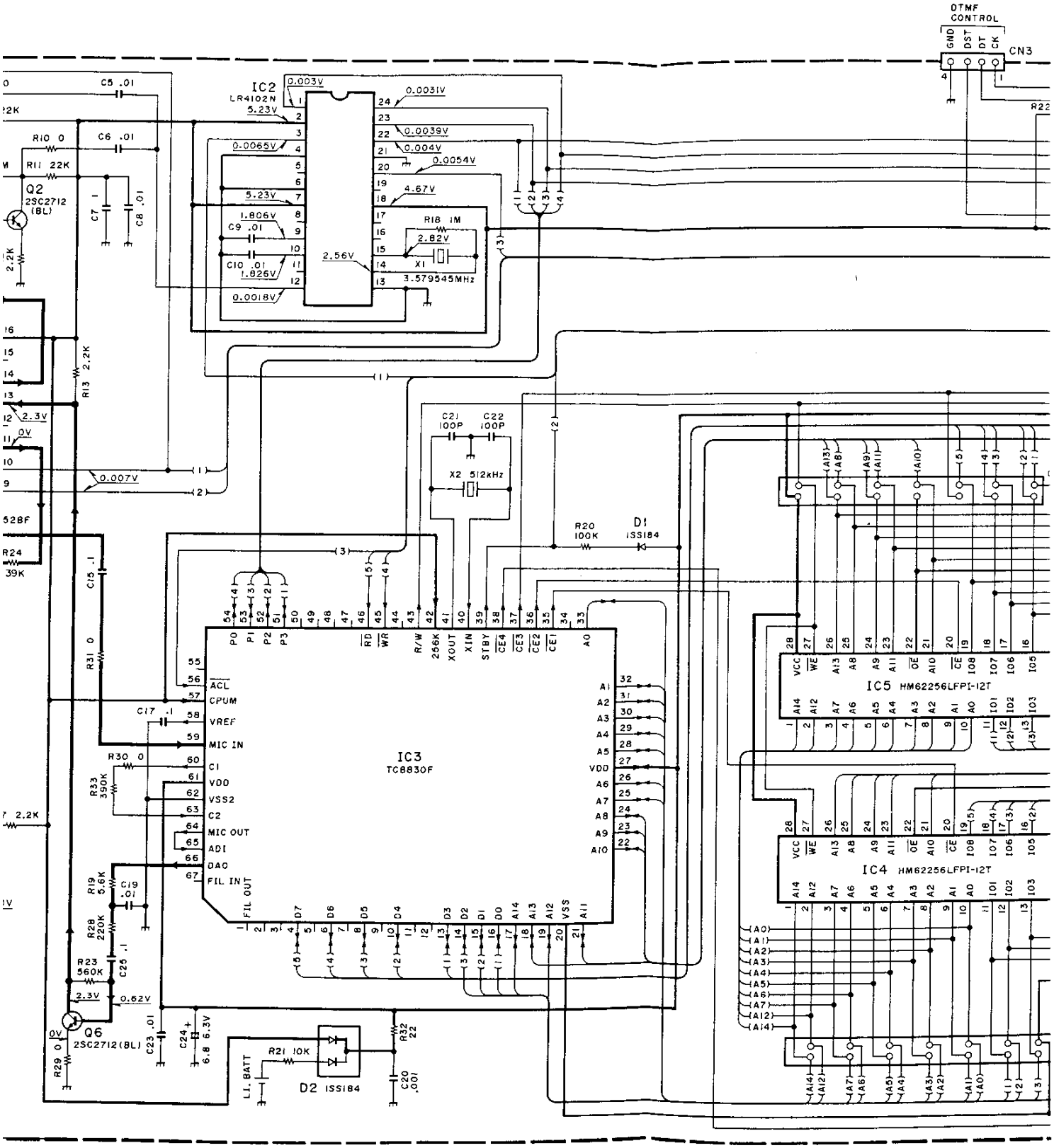

X TS-950SDX

TAL RECORDING UNIT)

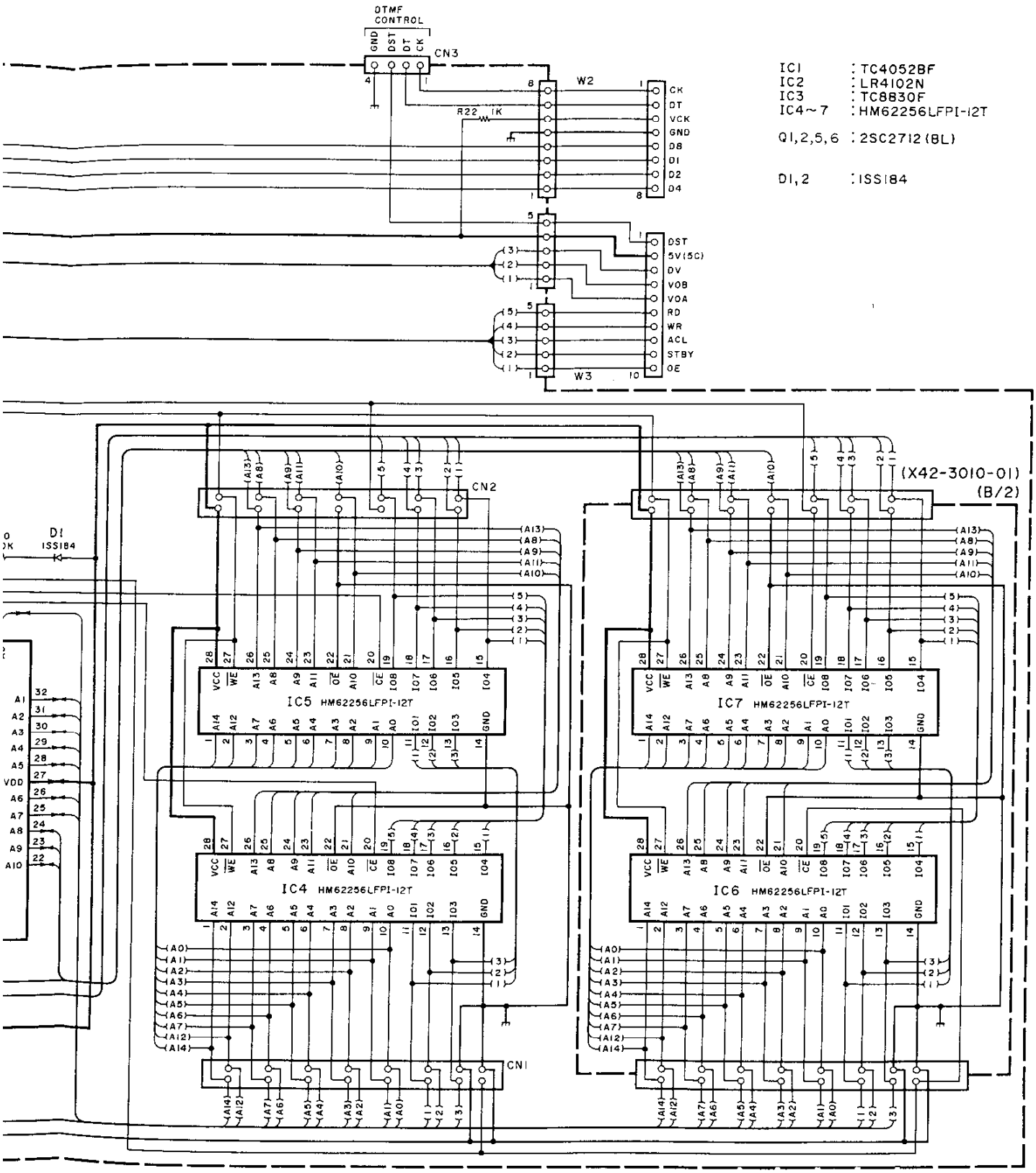

IC1 : TC4052BF
IC2 : LR4102N
IC3 : TC8830F
IC4~7 : HM62256LFPI-12T

Q1,2,5,6 : 2SC2712(BL)

D1,2 : 1SS184

DRU-2

RM-1 (REMOTE FUNCTION KEYBOARD)

* New Parts
Parts without Parts No. are not supplied.
Les articles non mentionnes dans le Parts No. ne sont pas fournis.
Teile ohne Parts No. werden nicht geliefert.

RM-1 Parts List

Ref. No. 参照番号	Address 位置	New Parts 新	Parts No. 部品番号	Description 部品名／規格	Destination 仕向	Remarks 備考
				RM-1		
		*	B62-0226-00	INSTRUCTION MANUAL		
		*	H25-0761-04	PROTECTION BAG		
		*	H52-0239-04	ITEM CARTON BOX		
		*	X60-3240-00	COMPOUND ASSY UNIT		
				SWITCH UNIT (X41-3230-00)		
CN1			E40-3300-05	PIN ASSY		
R1			RN14BK2E1500F	RN 150.0 F 1/4W		
R2			RN14BK2E5600F	RN 560.0 F 1/4W		
R3			RN14BK2E22R0F	RN 22.0 F 1/4W		
R4			RN14BK2E2700F	RN 270.0 F 1/4W		
R5			RN14BK2E8200F	RN 820.0 F 1/4W		
R6			RN14BK2E3900F	RN 390.0 F 1/4W		
R7			RN14BK2E22R0F	RN 22.0 F 1/4W		
R8			RN14BK2E1001F	RN 1.00K F 1/4W		
R9			RN14BK2E1000F	RN 100.0 F 1/4W		
R10			RN14BK2E5600F	RN 560.0 F 1/4W		
R11			RN14BK2E1501F	RN 1.50K F 1/4W		
R12			RN14BK2E5600F	RN 560.0 F 1/4W		
R13			RN14BK2E1501F	RN 1.50K F 1/4W		
R14			RN14BK2E2701F	RN 2.70K F 1/4W		
R15			RN14BK2E3300F	RN 330.0 F 1/4W		
R16			RN14BK2E4701F	RN 4.70K F 1/4W		
R17			RN14BK2E8201F	RN 8.20K F 1/4W		
R18			RN14BK2E2200F	RN 220.0 F 1/4W		
S1 -2		*	S62-0420-05	SLIDE SWITCH		
S3 -6			S70-0403-05	TACT SWITCH		
S7 -10		*	S70-0415-05	TACT SWITCH		
				COMPOUND UNIT (X60-3240-00)		
		*	A62-0166-04	PANEL(FRONT)		
A1		*	A62-0165-03	PANEL ASSY		
A2		*	A62-0167-02	PANEL(REAR)		
		*	E30-3110-25	RELAY CABLE		
		*	F07-1226-03	COVER		
		*	G13-1350-04	CUSHION		
		*	K29-4754-03	KNOB(BUTTON) (RLAY-1)		
		*	K29-4755-03	KNOB(BUTTON) (RLAY-2)		
		*	K29-4756-03	KNOB(BUTTON) (RLAY-3)		
		*	K29-4757-03	KNOB(BUTTON) (CLR)		
		*	K29-4758-03	KNOB(BUTTON) (TF-SET)		
		*	K29-4759-03	KNOB(BUTTON) (VOICE)		
		*	K29-4760-03	KNOB(BUTTON) (MR)		
		*	K29-4761-03	KNOB(BUTTON) (M.IN)		
		*	N87-2608-45	BRAZIER HEAD TAPTITE SCREW		
		*	X41-3230-00	SWITCH UNIT		

L:Scandinavia K:USA P:Canada
Y:PX(Far East, Hawaii) T:England E:Europe
Y:AAFES(Europe) X:Australia M:Other Areas

⚠ indicates safety critical components.

TS-950SDX

RM-1 (REMOTE FUNCTION KEYBOARD)

RM-1 PC Board View

SWITCH UNIT (X41-3230-00) Component side view

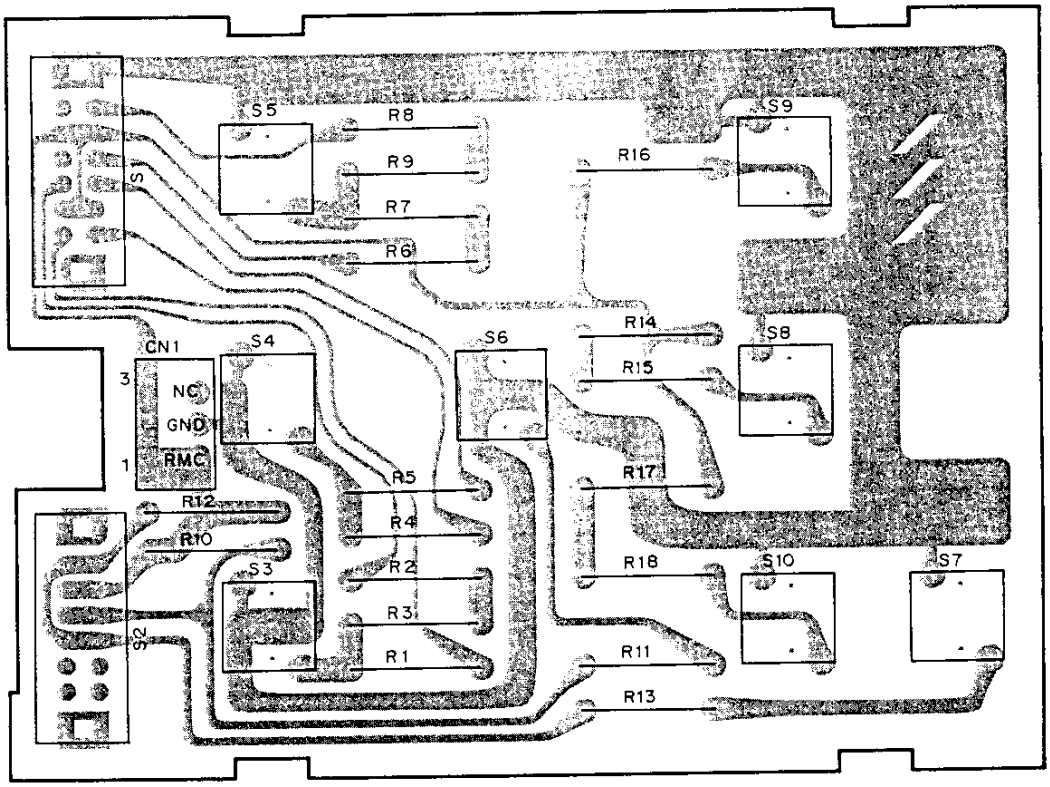

RM-1 Circuit Diagram

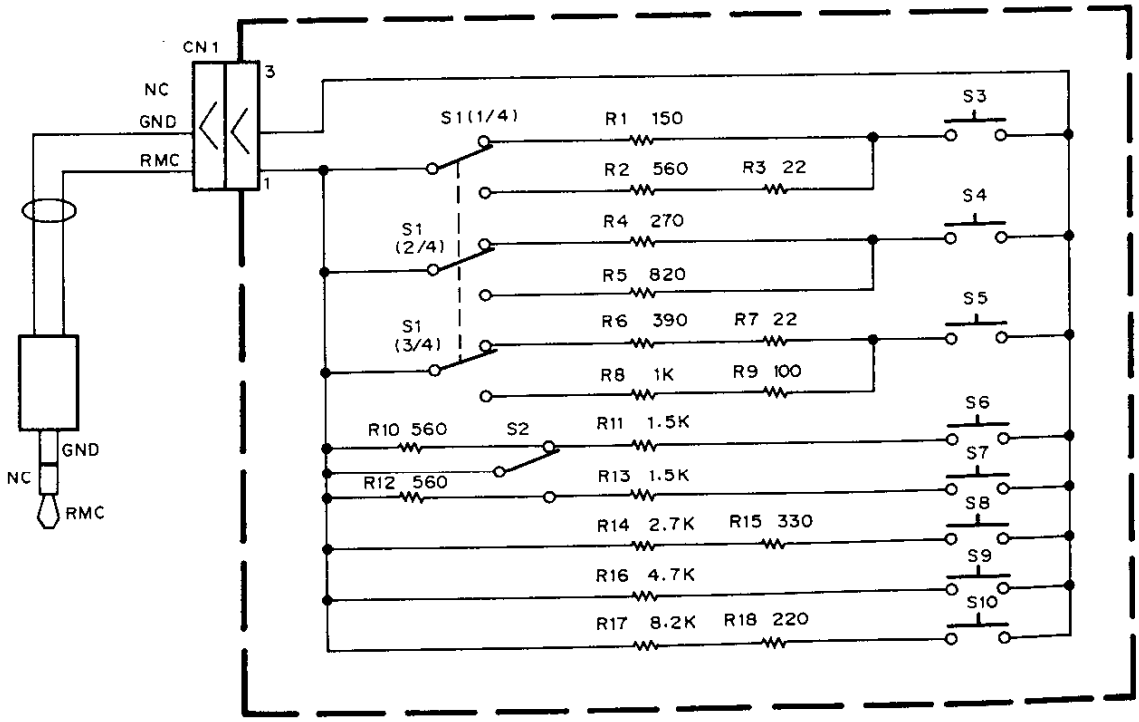

SP-950 (EXTERNAL SPEAKER)

SP-950 External View

SP-950 Specifications

Speaker used ..... 10 cm dia.
Rated input ..... 1 W
Impedance ..... 8 Ω
Frequency response ..... 160 Hz to 7 kHz
Filter cut-off frequency
HIGH1 ..... 3.0 kHz/–3dB
HIGH2 ..... 1.2 kHz/–3dB
HIGH1, 2 ..... 900 Hz/–3dB
LOW 400 Hz/–3dB
Filter attenuation ..... –6dB/oct.
Dimensions (W x H x D) ..... 180 x 141 x 310 (mm)
Wight ..... 2.0 kg

SP-950 Parts List

Ref. No.	New	Parts No.	Description
		A01-1052-02	Metallic cabinet (Bottom)
		A01-1077-02	Metallic cabinet (Top)
		A20-7023-03	Panel
		A23-1517-03	Rear panel
		B04-0404-03	Speaker grill
		B40-3948-04	Model name plate
		B43-1098-04	Badge
		B50-8301-00	Instruction manual
		E30-1711-15	Speaker cord (Accessory)
		G10-0662-04	Non-woven fabric
		H01-8265-04	Item carton box
		H10-2668-02	Polystyrene foamed fixture
		H20-1433-03	Protection cover
		H25-0705-04	Protection bag
		J02-0049-14	Foot (Rear)
		J02-0423-04	Foot (Front outside)
		J02-0424-04	Foot (Front inside)
		J19-1325-04	Mounting hardware (Panel)
		J61-0307-05	Wire band
		K29-4519-04	Knob
		N33-3006-41	Flat head machine screw (Case)
		N87-3006-41	Brazier head taptite screw
		N87-4008-41	Brazier head taptite screw (Foot, SP)
		T07-0222-15	Speaker
		X41-3060-00	Switch unit

SP-950 Schematic Diagram

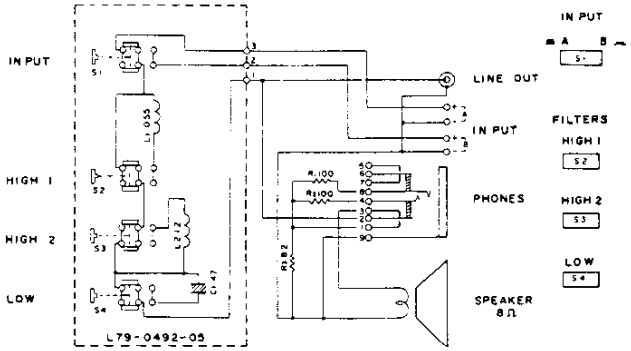

TS-950SDX

VS-2 (VOICE SYNTHESIZER)

VS-2 Parts List

Ref. No.	New Parts	Parts No.	Description
		VS-2	
		B50-8095-00	Instruction manual
		G13-0645-04	Cushion Accessary
		H01-8025-03	Item carton box
		H25-0029-04	Protection bag
		N32-2004-41	Flat head screw
		N35-2604-41	Bind head screw
		X42-3000-00	Accessary unit
		ACCESSARY UNIT (X42-3000-00)	
C6,7		CC73ECH1H202J	Chip C 2000pF J
C2,3,9		CC73FCH1H331J	Chip C 330pF J
C8		CC73FCH1H471J	Chip C 470pF J
C12		CE04CW1A330M	Electro 33µF 10WV
C1,5		CK73EB1E104K	Chip C 0.1µF K
C10		CK73EB1H473K	Chip C 0.047µF K
C13		C90-0503-05	Chip tan 0.068µF 35WV
C4,11		C92-0501-05	Chip tan 1.5µF 10WV
CN1		E40-5022-05	Pin ass'y (8P)
		J21-4146-04	Mounting hardware
X1		L78-0006-05	Ceramic oscillator
R3		RK73FB2A101J	Chip R 100 J 1/10W
R13		RK73FB2A102J	Chip R 1k J 1/10W
R1		RK73FB2A105J	Chip R 1M J 1/10W
R4,15		RK73FB2A153J	Chip R 15k J 1/10W
R10,14		RK73FB2A183J	Chip R 18k J 1/10W
R8,12		RK73FB2A472J	Chip R 4.7k J 1/10W
R2,5		RK73FB2A473J	Chip R 47k J 1/10W
R11		RK73FB2A682J	Chip R 6.8k J 1/10W
R6,7		RK73FB2A683J	Chip R 68k J 1/10W
R9		RK73FB2A822J	Chip R 8.2k J 1/10W
VR1		R12-3457-05	Trimming pot. 47k
S1		S31-1418-05	Slide switch
IC1		MN6401TRA	IC
IC2		NJM2904M	IC
IC3		TC74HC164FP	IC
IC3		HD74HC164FP	IC

VS-2 Schematic Diagram

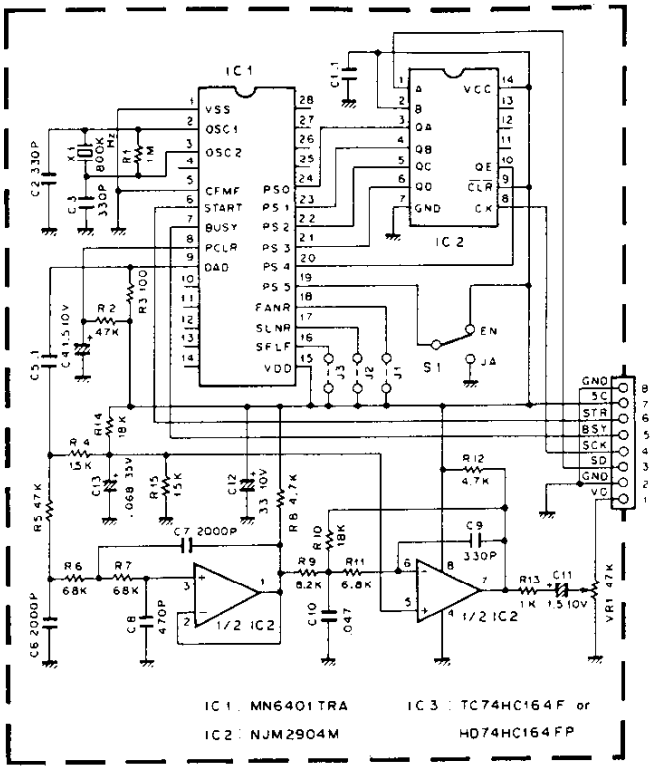

VS-2 PC Board View

ACCESSARY UNIT (X42-3000-00)

Component side view

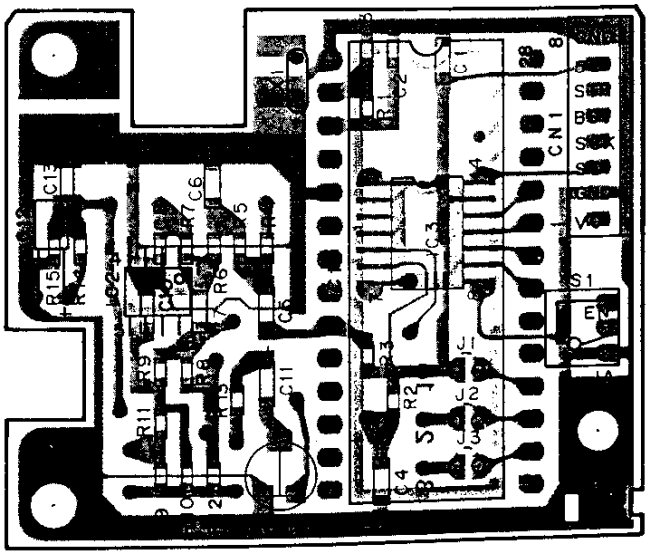

OPTION FILTER

Item	Rating
Nominal center frequency	8830kHz
Center frequency deviation	Within ±150Hz at 6dB
Passband width	±900Hz or more at 6dB
Attenuation bandwidth	±1800Hz or less at 60dB
Ripple	2dB or less
Insertion loss	Within 3dB ± 2dB
Guaranteed attenuation	80dB or more in the range ±2.5kHz to ±1MHz
Input and output impedance	600Ω/15pF

SSB Crystal filter (L71-0406-05) : YK-88SN-1

Item	Rating
Nominal center frequency	455kHz
Center frequency deviation	Within ±50Hz at 6dB
Passband width	±125Hz or more at 6dB
Attenuation bandwidth	±250Hz or less at 60dB
Ripple	2dB or less
Insertion loss	6dB or less
Guaranteed attenuation	80dB or more within 100Hz to 454.6kHz 80dB or more within 455.4kHz to 2MHz
Input and output impedance	2kΩ/15pF

CW Crystal filter (L71-0239-25) :YG-455CN-1

Item	Rating
Nominal center frequency	8830kHz
Center frequency deviation	Within ±50Hz at 6dB
Passband width	±125Hz or more at 6dB
Attenuation bandwidth	±600Hz or less at 60dB
Ripple	2dB or less
Insertion loss	Within 8dB ± 2dB
Guaranteed attenuation	80dB or more in the range ±2kHz to ±1MHz
Input and output impedance	600Ω/15pF

CW Crystal filter (L71-0407-05) : YK-88CN-1

TS-950SDX

SPECIFICATIONS

Specifications				Model: TS-950SDX
General	Mode			J3E (LSB, USB), A1A (CW), A3E (AM), F3E (FM), F1A (FSK)
	Memory channels			100
	Antenna impedance			50Ω (With antenna tuner 20 to 150Ω)
	Power requirement	K and P type		120V AC ± 10%
		M type		120/230V AC ± 10%
		E type		230V AC ± 10%
		X type		120/240V AC ± 10%
		T type		220/240V AC ± 10%
	Power dissipation	Receive mode with no input signal		110W
		Transmit mode		700W (7.5A)
	Operating temperature			-10 to +50°C (+14 to +122°F)
	Frequency stability			Less than ±0.5 PPM
	Frequency accuracy			Less than ±0.5 PPM
	Dimensions (W x H x D) (Projection included)			409 x 154 x 446 mm (16-3/22" x 6-1/16" x 17-9/16")
	Weight			23kg (50.6 lbs)
Transmitter	Frequency range	160m band		1.8 to 2.0MHz
		80m band		3.5 to 4.0MHz
		40m band		7.0 to 7.3MHz
		30m band		10.1 to 10.15MHz
		20m band		14.0 to 14.35MHz
		17m band		18.068 to 18.168MHz
		15m band		21.0 to 21.45MHz
		12m band		24.89 to 24.99MHz
		10m band		28.0 to 29.7MHz
	Output power (With auto antenna tuner in "THRU") 1.9 to 28MHz	SSB, CW, FSK, FM	MAX	150W
			MIN	20W
		AM	MAX	40W
			MIN	10W
	Modulation	SSB		Balanced modulation
		FM		Reactance modulation
		AM		Low level modulation
	Spurious radiation			Less than -40dB
	Carrier suppression (With 1.5kHz reference)			More then 50dB
	Unwanted sideband suppression (With 1.5kHz reference)			More than 60dB
	Maximum frequency deviation (FM)			Less than ±5kHz
	Frequency response (-6dB)			100 to 3100Hz
	XIT variable range			±9.99kHz
	Microphone impedance			250 to 600Ω

SPECIFICATIONS

Specifications			Model	TX-950SDX
Receiver	Circuitry	Main	SSB, CW, FSK, AM	Quadruple conversion superheterodyne
			FM	Triple conversion superheterodyne
		Sub	SSB, CW, FSK	Double conversion superheterodyne
	Frequency range			100kHz to 30MHz
	Intermediate frequency		Main	1st : 73.05MHz, 2nd : 8.83MHz, 3rd : 455kHz, 4th : 100kHz
			Sub	1st : 40.055MHz, 2nd : 10.695MHz
	Sensitivity	SSB, CW (at 10dB S+N/N)	100kHz to 150kHz	Less than 2.5μV
			150kHz to 490kHz	Less than 1μV
			490kHz to 1.705MHz	Less than 4μV
			1.62MHz to 30MHz	Less than 0.2μV
		AM (at 10dB S +N/N)	100kHz to 150kHz	Less than 25μV
			150kHz to 490kHz	Less than 10μV
			490kHz to 1.62MHz	Less than 32μV
			1.62MHz to 30MHz	Less than 2.0μV
		FM (at 12dB SINAD)	28MHz to 30MHz	Less than 0.5μV
	Selectivity		SSB, AM (N), FSK	−6dB : 2.4kHz, −60dB : 3.4kHz
			AM (W)	−6dB : 6kHz, −50dB : 15kHz
			CW (W)	−6dB : 400Hz, −60dB : 900Hz
			FM	−6dB : 12kHz, −60dB : 24kHz
	Image ratio			More than 80dB
	1st IF rejection			More than 70dB
	Notch filter attenuation			More than 45dB
	RIT variable range			±9.99kHz
	Squelch sensitivity	SSB, CW, FSK, AM	100kHz to 150kHz	Less tha 6.3μV
			150kHz to 490kHz	Less than 2.5μV
			490kHz to 1.705MHz	Less than 10μV
			1.705MHz to 30MHz	Less than 0.5μV
		FM	28MHz to 30MHz	Less than 0.32μV
	Output			1.5W across 8Ω load (10% distortion)
	Output load impedance			8Ω

Notes

1. Circuit and ratings are subject to change without notice due to advancements in technology.
2. Remember to keep the transmitting output power within the power limitations of your license.